# Airport Surveying-GIS Program

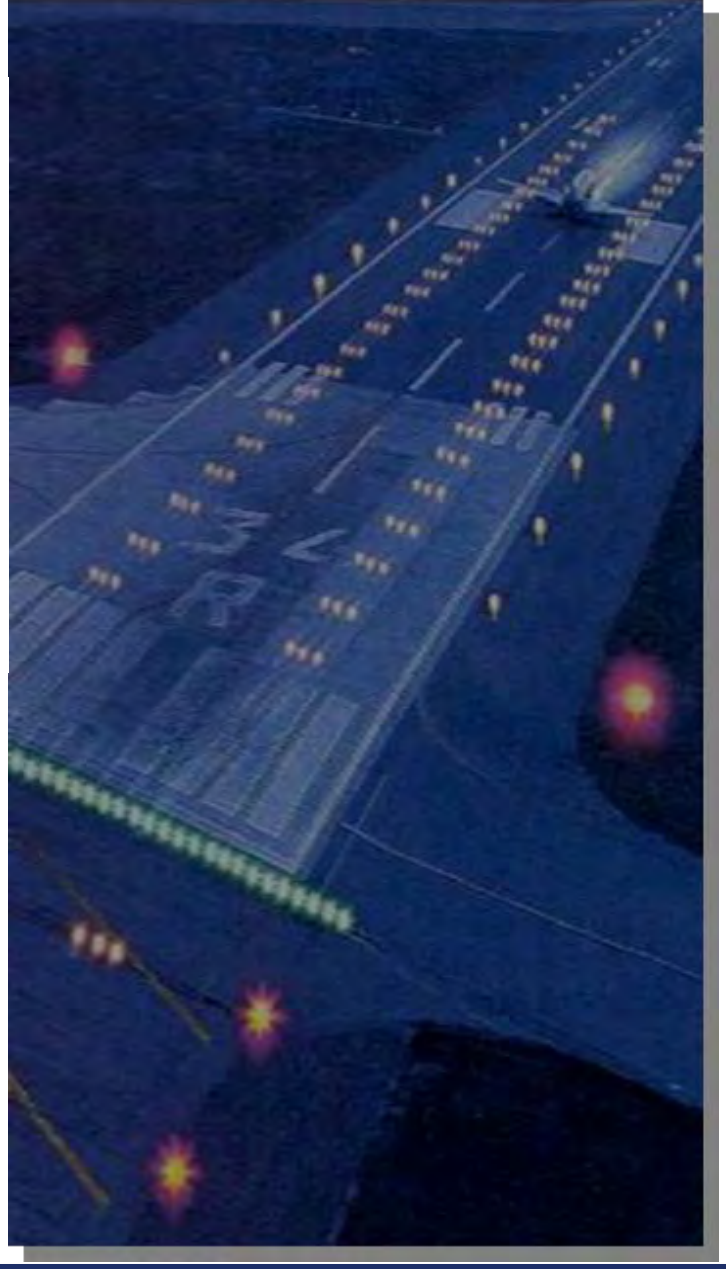

**Presentation to:**

**Great Lakes Airports Conference**

**Name:** **Robert Bonanni**

**Date:** **October 28, 2008**

# Overview

- ✓ History of the Program
- ✓ Benefits of the program to the FAA and our airport sponsors
- ✓ Why implement such a process?
- ✓ eALP
- ✓ Surveying Requirements
- ✓ LPV Approaches and AGIS
- ✓ Questions

# History of the Program

- Conceived to address the airport data problems the FAA was experiencing agency wide

- It was recognized that there had to be a better way of collecting, storing managing, and sharing the data about our airports

- Adopted as a FAA Flight Plan goal in 2006

# AIRPORTS GIS

## WHAT IS GIS?

- In GIS, data is layered like a stack of transparencies

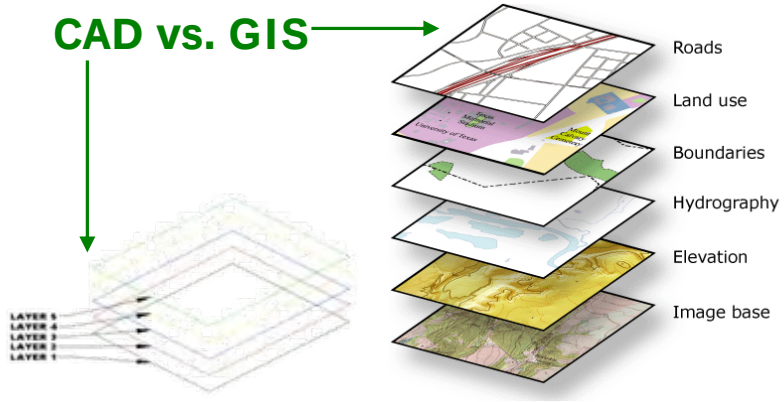


- Data that may come from many different sources is geographically projected to line up together
- Metadata: data about data

## AIRPORTS GIS?

- A single, web-based database system for validated data in support of airport design & construction programs
- A GIS planning tool to help airport planners visualize the characteristics of a airport facilities & features (runway length, width, surface type)
- A tool to help field personnel address & coordinate airport changes in a timely manner in an <u>integrated</u> environment

# What Is The Length Of This Runway?

## The answer depends on who you ask !!!!

# Which Data Is Correct?

## NFDC NASR Data

**Runway Information**

Runway 09/27

| | |
|---|---|
| Dimensions: | 3335 ft. x 75 ft. |
| Runway edge lights: | Medium Intensity lights |
| Weight limitations: | Single wheel: |
| | Double wheel: |
| | Double tandem: |

**Runway 09**

| | |
|---|---|
| Traffic Pattern: | Left |
| Runway heading: | 112 |
| Markings: | Basic |
| Markings condition: | Good |
| Latitude: | 44-30-7.037 N |
| Longitude: | 123-17-30.385 W |
| Elevation: | 241.4 ft. |
| Threshold crossing height: | |
| Visual glide path angle: | degrees |
| Visual slop indicator: | |
| Approach lights: | |
| Centerline lights: | |
| Displaced Threshold: | |
| DT latitude: | |

**IOEAAA**

**Runway Data:**

| | NASR | Opp. NASR |
|---|---|---|
| **ID:** | 09 | 27 |
| **Heading:** | 112.03 | 292.04 |
| **Latitude:** | 44-30-6.194 N | 44-29-53.097 N |
| **Longitude:** | 123-17-27.503 W | 123-16-42.138 W |
| **Approach Category:** | B(V) - Other than Utility (Visual) | B(V) - Other than Utility (Visual) |
| **Elevation:** | 245 | 246.3 |
| **Approach Lights:** | | |
| **Extension:** | 0 | 0 |
| **Length:** | 3545 | 3545 |
| **Width:** | 75 | 75 |

## NFPG Data

**Rwy Number: 09**

| | | |
|---|---|---|
| | Status: A | Survey: 5 |
| | Markings: | BSC- |

**Threshold**

| | |
|---|---|
| Latitude: | N 44° 30' 06.3000" |
| Longitude: | W 123° 17' 27.8300" |
| Elevation: | 241.0 |
| Elipsoid Elev: | 169.9 E |
| Horz. Datum: | NAD83 |
| Vert. Datum: | NGVD29 |

**Displaced Threshold**

| | |
|---|---|
| Latitude: | |
| Longitude: | |
| Elevation: | |
| Elipsoid Elev: | |
| Horz. Datum: | NAD83 |
| Vert. Datum: | NGVD29 |

| | |
|---|---|
| Landing Length: | 3335 |
| FI RWY Length: | 3145 |
| FI RWY Height: | 244 |
| Tdz Elevation: | 244.2 |
| True Bearing: | 111.97 |

# How The Program Is Designed To Help

**The Airport Surveying-GIS program provides a *single portal* for the collection and dissemination of standards based verified source data to support future design, mapping, surveying, and construction activities from a known good (independent verification and validation) and maintained data set.**

**Airports-GIS provides the foundation for connecting the airports, FAA, and other agencies**

**A central database for storing survey, charting, analysis, and planning data**

# Program Benefits

| | |
|---|---|
| **Greater Productivity** | **Submission and processing of electronic Airport Layout Plans** |
| **Dependable** | **Data is collected once and then managed through the system ensuring the most current data is readily available** |
| **Connected** | **Electronic management and processing of *all* airport data … one stop shop for managing and updating an airports data** |
| **Best Economics** | **GIS is a scalable and interoperable technology allowing others to use and share data without recollecting, because the metadata provides the source, accuracy, collection methodology, etc. of the dataset. Each entity builds on the base data set to meet its own requirements** |

# Airport Sponsor Benefits

✓Provides a single point of entry for the submission and maintenance of ***AIRPORT DATA*** and to communicate the changes electronically to the FAA

✓Provides non-GIS Equipped Airports with a GIS Foundation for:

- ✓Airport Layout Plans,
- ✓ Obstruction Charts,
- ✓ Construction plans, and other airport mapping products
- ✓Planning
- ✓Zoning

✓Improves Response to Airport Changes

✓Provides On-line Access to Electronic Obstruction Charts and Airport Layout Plan Data to FAA, Airports, and Consultants

✓Provides the sponsor access to FAA data

✓Speeds Production and Currency of FAA Charts and publications

# Why Implement Such A Process?

• To provide a common platform for the collection, maintenance, and dissemination of airport and aeronautical information and sharing of the data for improved efficiency of airport operations for both the sponsor and the FAA.

• Current initiatives within aviation industry (moving maps, electronic flight information, advanced avionics) require a data centric airport environment, as opposed to the traditional product based environment.

# Why Implement Such A Process?

- To meet the challenges of the changing role of aeronautical data in the system, the FAA needed to rethink the way it collects, stores, and maintains the data about airports.

- We need to focus on **managing** our airport and aeronautical data.

# Why Change?

```
|19L   |P|17097|
|Y|17097|
| 385719.1845| -772609.5261|1804003|1
|   302.2|          |17097|
|                |                |          |
|      0|   293.2|          |17097|
| 4000|   305.1|          |17097|
| 8500|   312.4|          |17097|
|11500|   311.7|          |17097|
```

- UDDF (Universal Data Delivery Format) delivered data … it was an outline, it did not tell the whole story!
- This runway entry only shows the geographic position (latitude/longitude, true bearing, touchdown zone elevation, and four (4) elevation points on an 11,500 foot runway.

# The answer … a richer data set

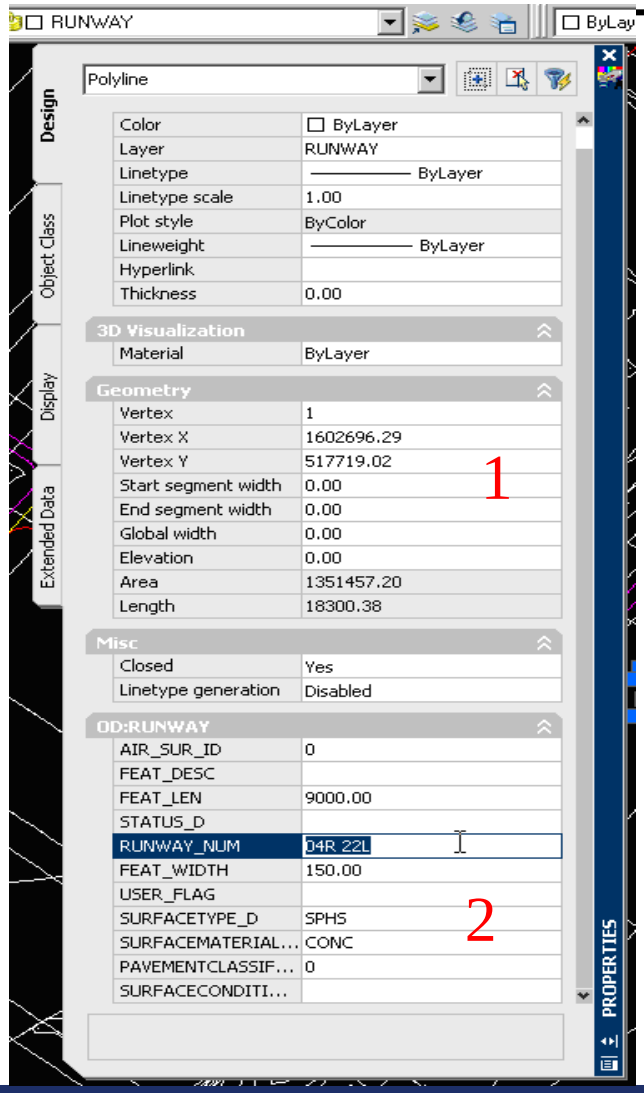


- Geospatial data identifies the geographic location and characteristics of natural or man-made features
- Moving to a geospatial environment allows us to not only know the geographic location but also, and sometimes more importantly the **characteristics** of a feature.
- In the example (left) of a runway …
  - We not only have the coordinates (1)
  - We also have the characteristics (2)
    - Width
    - Length
    - Surface Type
    - Surface Material
    - Surface Condition
- A much richer data set …all together in a single place!

# LOOKING FWD | ELECTRONIC-ALP

## *FLIGHT PLAN TARGET* *STATUS: IN PROGRESS*

- Develop capability within the Airports-GIS application for electronic Airport Layout Diagrams (e-ALPs) and digital obstruction charts by AUG 31, 2009

- e-ALP National Standards Development Team created to:
  - ❑ Define what is e-ALP
  - ❑ Develop requirements for the drawing set
  - ❑ Standardize checklists
  - ❑ Approve design layouts
  - ❑ Provide inputs to initial program guidance and rewrites of ACs
  - ❑ Re-define data standards
  - ❑ Re-design coordination processes (pen-and-ink, review, approval, e-sign)

- Ultimately, e-ALP will provide regional and district personnel with a simplified electronic gateway for ALP creation, amendment, & validation

- Policy implications?
- Version control?
- Pen-and-ink changes?
- Security? Sensitivity?
- Financial eligibility?
- Education available?
- Implementation plan?
- Technical capability?

# Geodetic Control and Imagery Requirements for Airport Projects

AC 150/5300-16 and 150/5300-17

# National Spatial Reference System

**NATIONAL SPATIAL REFERENCE SYSTEM (NSRS).**

- All surveying and positioning must be tied to the NSRS.

**HORIZONTAL CONTROL.**

- The only nationally recognized horizontal datum is North American Datum of (NAD) 83 (YYYY), where YYYY is the year of the most recent observations. Note: The year of observations is on the NGS datasheet next to the latitude and longitude.

**VERTICAL REFERENCE.**

- Use North American Vertical Datum (NAVD) 88. For information on NAVD 88, refer to the following website: http://www.ngs.noaa.gov/PUBS_LIB/NAVD88/navd88report.htm .

# How Is An Airport Tied To The NSRS?

- Airports are tied to the NSRS in two ways
  - Permanent Geodetic Control (PACS)
  - Temporary Control with an OPUS solution
    - OPUS - Online User Positioning System

# ARP Policy on Permanent Geodetic Control (PACS/SACS)

## AC 150/5300-16, paragraph 2.2

## Airports Requiring Geodetic Control Monumentation

- **Permanent Control.** FAA Regional Airports Divisions will determine which airports require permanent geodetic control monumentation in the form of PACS or SACS based on the activity (operational or proposed future construction) at the airport. However, for all airports in the National Plan of Integrated Airport Systems (NPIAS), we strongly recommend that at least the PACS be established.

# Imagery Requirements

# AC 150/5300-17B

# Why Do We Require Imagery?

- The role and importance of airport and aeronautical data in meeting the safety, regularity and efficiency of air navigation changed significantly with the implementation of area navigation (RNAV), required navigation performance (RNP) and airborne computer based navigation systems.

- There are 2 reasons we require imagery.
  - The primary reason we require imagery for projects involving safety critical data is to ensure the ***quality of the aeronautical information*** collected.
  - Secondly, we feel that the use of imagery is an accurate and potentially cost saving method of collecting this type of data.

# Verification vs. Validation

- Verification: The confirmation by examination and provision of objective evidence that the specified requirements are fulfilled. Verification is necessary to ensure the data set accurately represents the specifications and is uncorrupted.
- Verification is testing against an independent measurement set (different tools or software)

- Validation is the confirmation by examination and provisions of objective evidence showing the data set **meets the particular requirements of the intended use**. The purpose of the validation process is to demonstrate the data set has sufficient overall integrity to satisfy the requirements for its intended application. Validation answers the questions “is the data reasonable when compared against known data” and “does it meet the identified need.”

- Validation means is the data reasonable and acceptable

# I’m a licensed professional!

# Why do you have NGS checking my work?

# NGS Verification

# In other words …

- Validation – You built the ***right*** product

- Verification - You built the product ***RIGHT***

# AC 150/5300-17B

## Principal Changes.

- Reformatted entire document for readability, usability, and to provide clarification of some criteria.
- Added requirement for submission and approval of an imagery plan prior to imagery acquisition.
- Clarified requirement of flying height to consider the use of the imagery of further endeavors such as future engineering or planning activities.
- Eliminated requirement for a final report except under most conditions unless there is a change from the provided plan or an unusual circumstance was encountered during the collection effort.
- Add requirement for development and delivery to FAA of digital orthoimagery.
- Added a requirement for the use of the Airports GIS to submit and track project requirements such as the plan and deliverables
- Changes the exterior orientation reporting units for omega, phi, kappa, from radians to decimal degrees.
- Allows the use of state plane coordinates, reported in meters

# Flying Height

- The imagery should be flown at an altitude providing for usability of the imagery beyond the scope of the current project, such as future engineering or planning.

- AC 150/5300-17B provides some general guidelines

Table 1. Federal Geographic Data Committee Spatial Data Accuracy Standards (ASPRS) Class II Mapping accuracy for large scale maps) Map Accuracies as a function of Photo/Map Scale

| Map Scale 1" = -ft. | Photo Scale 1" = -ft. | Minimum Contour Interval in feet | Accuracy XY RMSE in feet | Accuracy Z RMSE in feet |
|---|---|---|---|---|
| 20 | 200 | 0.5 | 0.4 | 0.33 |
| 40 | 320 | 1.0 | 0.8 | 0.66 |
| 50 | 400 | 1.0 | 1.0 | 0.66 |
| 100 | 800 | 2.0 | 2.0 | 1.32 |
| 200 | 1600 | 4.0 | 4.0 | 2.64 |
| 250 | 2000 | 5.0 | 5.0 | 3.30 |
| 400 | 3200 | 8.0 | 8.0 | 5.28 |
| 500 | 4000 | 10.0 | 10.0 | 6.60 |
| 800 | 6400 | 16.0 | 16.0 | 10.56 |
| 1000 | 8000 | 20.0 | 20.0 | 13.20 |
| 1667 | 12800 | 32.0 | 33.3 | 21.12 |

# Required Deliverables (for FAA)

- Provide the FAA with digital orthoimagery of the area(s) flown.
- Develop the orthoimagery using the specifications defined by the Federal Geographic Data Committee in FGDC-STD-008-1999, except the imagery should not be resampled, they should be developed at the resolution of the original imagery used for analysis.
- Provide metadata for the orthoimagery as described in the FGDC standard. Submit the digital orthoimagery to the FAA on similar media as hat uses to provide the imagery to NGS. Include on the delivery media FGDC compliant metadata for the orthoimagery.

# Introduction to Geographic Information Systems (GIS)

# AC 150/5300-18B

# Organization of AC 150/5300-18B

- Though it looks daunting from the outside … it's not really that bad!
- The AC has five (5) chapters and appendices
- Chapter 1 discusses general survey guidance and specifications
- Chapter 2 discusses specific survey specifications and standards
- Chapter 3 discusses geospatial standard and specifications (GIS rules)
- Chapter 4 discusses data translation and existing data
- Chapter 5 discusses specific about the airport features
- Chapter 1 – 4 cover about 100 pages the rest is chapter 5!

# Vision for Geospatial Data

Provide an interoperable web-based system for the collection, management, maintenance and sharing of airport data addressing the needs of the FAA lines of business ***collectively*** rather than individually.

# Geospatial (Digital) Data …the opportunity

- ✓ The Airports Division currently funds Airport authority geodetic surveys for ALP development, and the survey results are often delivered with varying degrees of accuracy, media formats, and related data.
- ✓ Airport Layout Plans (ALP) are a graphic representation of current and future airport development as formally adopted by the sponsor and approved by FAA.
- ✓ Airport Layout Plans (ALP) are required by the Airport Improvement Program (AIP). Each NPIAS airport must maintain a current ALP.
- ✓ The FAA is already paying collect this data, now let's move the data into a reusable and validated source data.

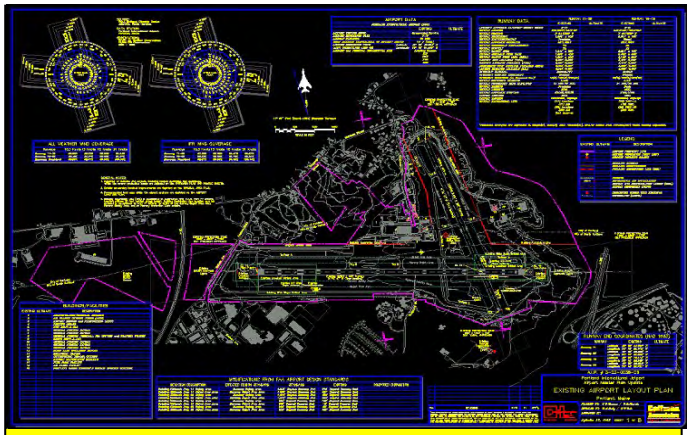

***What if… the FAA could capture and validate against a defined standard important data from the ALP and make it available electronically for whoever needs it?***

# Geospatial Data Objectives

- Consolidate all FAA airport data requirements into a new standard for airport layout data to support FAA and industry
  - Develop a comprehensive airport geo-spatial data standard
  - RTCA DO-272, “User Requirements for Aerodrome Mapping Information”
  - RTCA DO-276, “User Requirements for Terrain and Obstacle Data”
  - AirMAT Model
  - EuroControl AICM/AIXM
- Collect and maintain airport data digitally
- Eliminate redundancy
  - Fewer airport surveys
  - Standard feature identification scheme
- Eliminate disparate data sets

# Types of Surveys

- Surveys are on completed on airports for many different reasons
  - Boundary
  - Construction
  - Utilities
  - Obstruction

- Each served a single purpose, each was not coordinated sometimes collecting similar or the exact same data

- Some even happening at the same time!

# New Philosophy on Airport Surveys

- AC 150/5300-18 is designed to collect data about the airport as a whole rather than as a group of individual projects.
- Since most everything on an airport is interconnected or has a relationship to other things and these relationships should be preserved.
- Data collection projects should build on one another.
- Data provided as part of a design should be incorporated  into the airport data set and later verified rather than collected new.

# New Philosophy on Airports Surveys

## Runway Extension Example

- A position an elevation of the new runway end is determined during the design phase
- These values can and should be used to coordinate the changes to instrument procedures once the design is finalized.
- Most if not all of the information for procedure design is in the design … runway end position, elevation, touchdown zone elevation, elevation of centerline abeam navigational aids etc.
- Once construction is complete these numbers need to be validated … remember what validation is?
- The obstruction analysis can also be completed off these numbers the key is maintaining the analysis (new objects) once it is completed until the runway is done.

# Obstruction Surveys

## Alphabet Soup Eye Chart or Survey Requirements ???

- ANA-LPV
- ANAPC
- PIR
- CGR
- BV
- NP-D
- AV
- C
- D

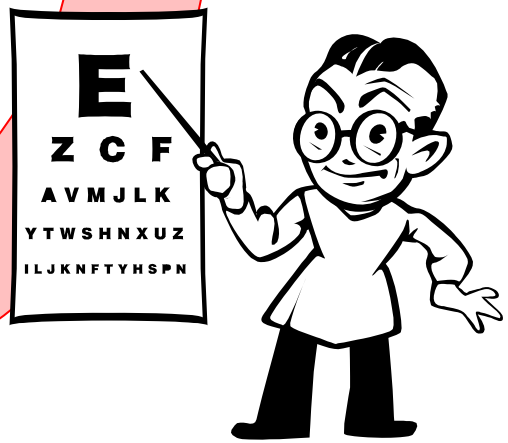

# Types of Surveys

- Under the previous standard (FAA 405) there were as many different types of surveys
- These multiple types did not always provide the information required and most were incorrectly based on 14 CFR 77
- AC 150/5300-18B has only two types of “obstruction surveys” … it is a single multifaceted surface not individual pieces
  - Vertically Guided
  - Non-Vertically Guided

# Vertically Guided Airport Airspace Analysis Surface

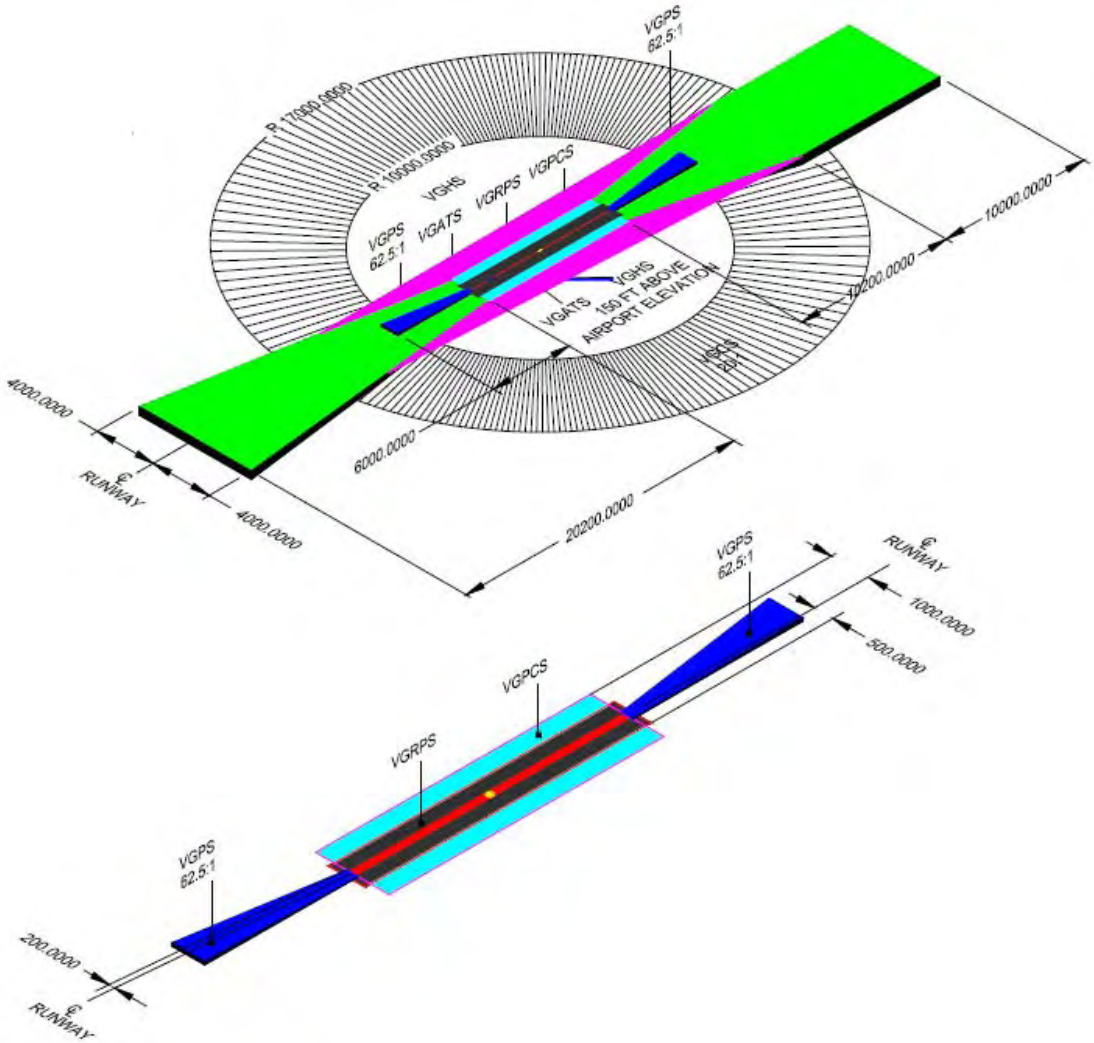


These specifications support the airport's planning and design activities for the development of vertically guided instrument approaches such as ILS, PAR, MLS, LPV, TLS, RNP and Baro/VNAV

# Non-Vertically Guided Airport Airspace Analysis Surface

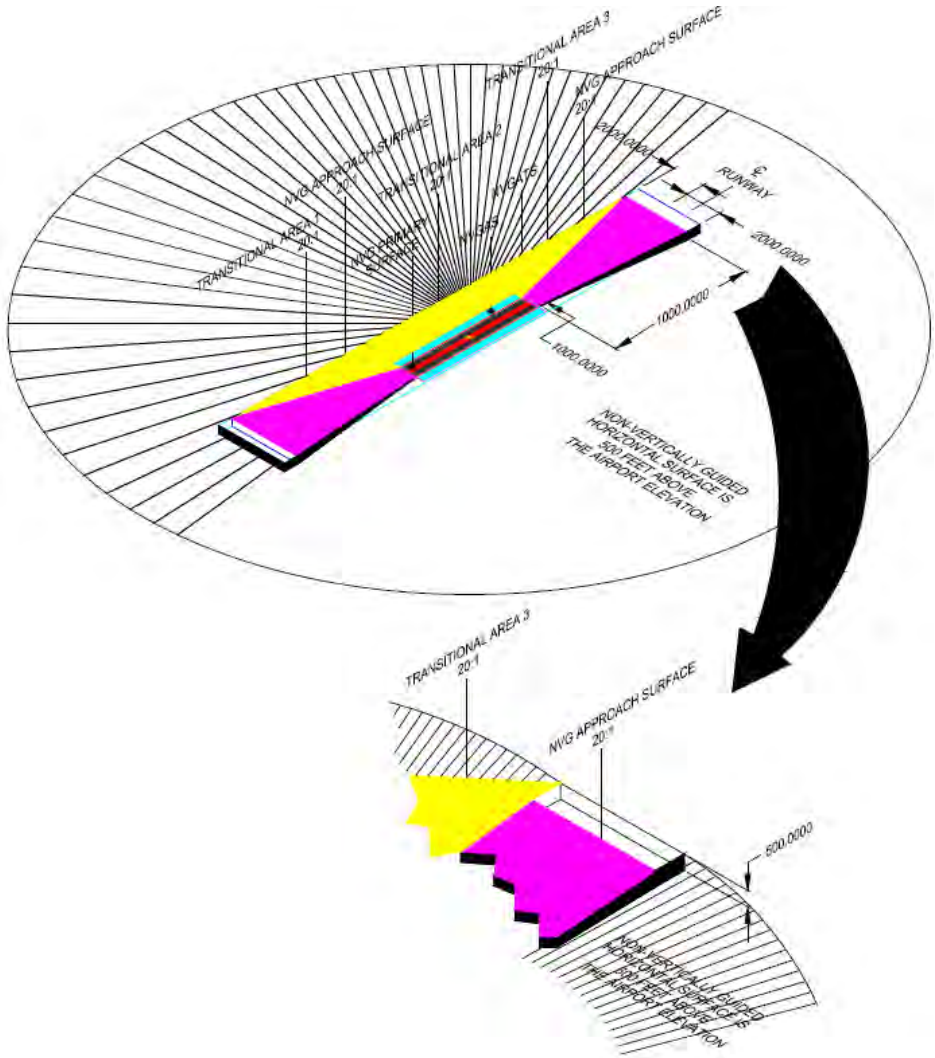


Use the following specifications and associated figures to complete object identification on and surrounding airports to runways designed for visual or non-vertically guided (NVG) operations (Lateral Navigation (LNAV), Localizer Performance (LP), VOR, NDB, Localizer, Localizer Directional Aid (LDA), etc.)

# What does Satellite Navigation (WAAS) Bring to Airports?

- **Increase Safety**
  - Continuous Descent Procedures reduce CFIT/ALA
  - Improved Pilot/Controller Situational Awareness
- **Greater Capacity**
  - All Weather Operations
  - Reduced lateral separation
  - Precise arrival, approach, and departure procedures
  - Parallel Routing
  - Flexible Routing / Improved Re-routing capabilities
- **No navigational equipment on the airport**
  - No critical area protection required
- ***Near* Precision approach capability to appropriate runways**

# What Airport Owners and Consultants Should Know about WAAS

1. FAA goal to increase publication of WAAS procedures to 500 per year

2. FAA strives to provide the best approach, and lowest minimums for each WAAS procedure

3. New WAAS procedures at your airport can have a <u>profound</u> affect on Design Standards

# What Airport Owners and Consultants Should Know about WAAS

Q: How much does a free WAAS procedure cost?

# Typical non-precision RPZ

# Approach upgraded to Precision

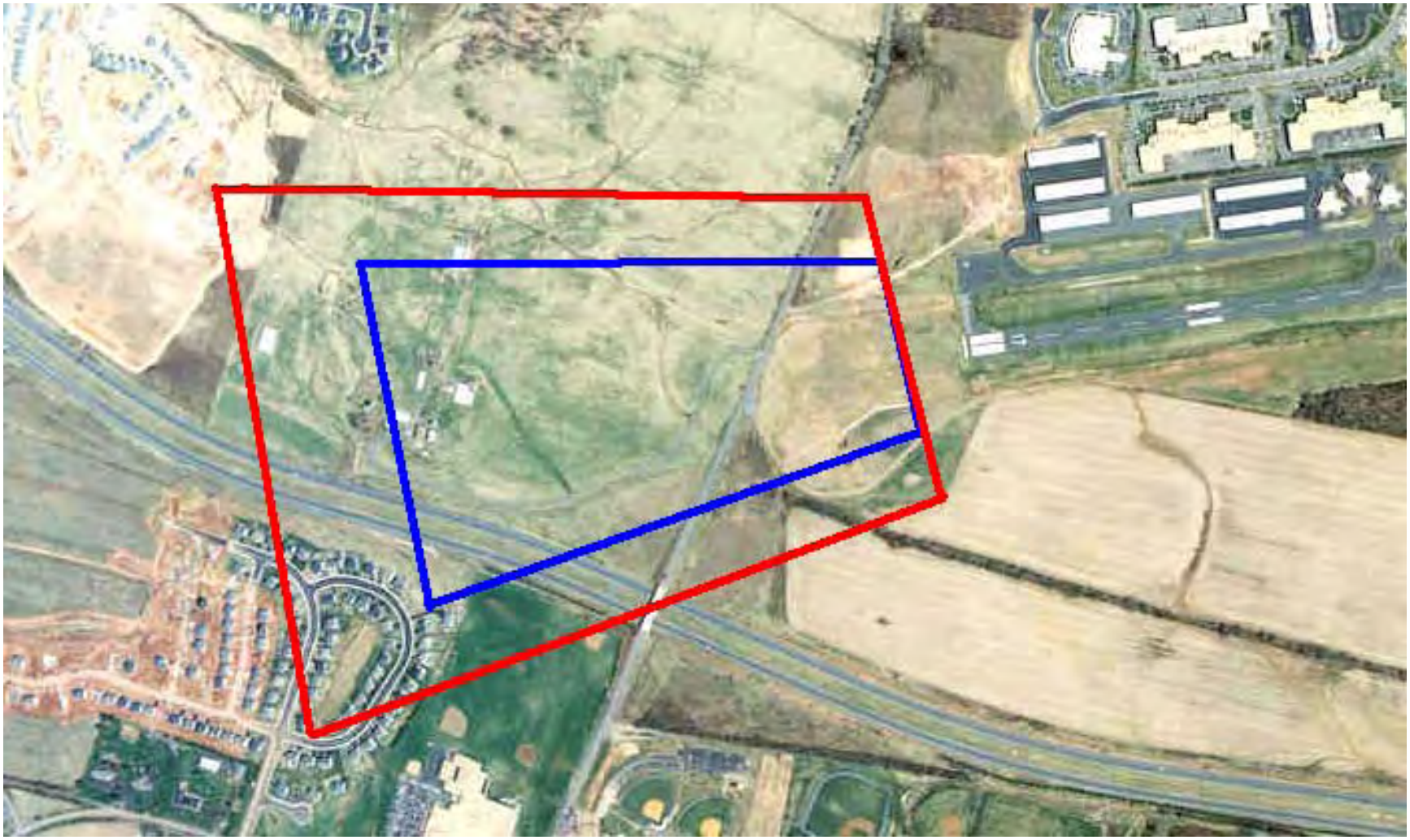

# Any new procedure (including WAAS) impacts Airport Design Standards:

3 Changes that Affect Design Standards:

1. New non-precision approach procedure on runways that were visual approach only
2. Existing non-precision approach upgraded to a precision approach
3. Significant minimums lowered for existing non-precision approach

# What Should Airport Owners do to Prepare for new WAAS Procedures?

1. Understand the affect of a planned new WAAS procedure on your specific airport (Prior Proper Planning),

2. Update the ALP for the new procedure,

3. Survey the approach conditions to know the obstruction or get the best minimums (IAW A/C 150/5300-16, -17, -18)

# What Should Airport Owners do to Prepare for new WAAS Procedures?

5. Do not hesitate to request a change in the procedure (higher minimums, day/night restrictions, etc) to reduce impact until the airport can be improved to standards,

6. Implement improvements to support the new WAAS procedure(s) (buy land, easements, clear obstructions)

# How Low Can We Go?

The lowest approach and departure minimums may be achieved where the obstacle environment is ***benign*** and the ***airport infrastructure*** requirements of AC 150/5340-1, “Marking of Paved Areas on Airports”, and AC 150/5300-13, “Airport Design” are met.

# How Do We Decide How Low To Go?

**Table A16-1B. Approach Procedure With Vertical Guidance (APV-RNP) Approach Requirements**

| Visibility Minimums[1] | < 3/4-statute mile | < 1-statute mile | 1-statute mile | >1-statute mile[14] |
|---|---|---|---|---|
| Height Above Touchdown (HAT)[2] | 250 | 300 | 350 | 400 |
| TERPS Glidepath Qualification Surface (GQS)[3] | Table A2-1, Row 7, Criteria, and Appendix 2, par. 5a Clear | | | |
| TERPS Paragraph 251 | 34:1 clear | 20:1 clear | 20:1 clear, or penetrations lighted for night minimums (See AC 70/7460-1) | |
| Precision Obstacle Free Zone (POFZ) 200 x 800[4] | Required | Recommended | | |
| Airport Layout Plan[5] | Required | | | |
| Minimum Runway Length | 4,200 ft (1,280 m) (Paved) | 3,200 ft (975 m)[6] (Paved) | 3,200 ft (975 m)[6,7] | |
| Runway Markings (See AC 150/5340-1) | Precision | Nonprecision *(precision recommended)* | Nonprecision[7] | |
| Holding Position Signs & Markings (See AC 150/5340-1 and AC 150/5340-18) | Precision | Nonprecision *(precision recommended)* | Nonprecision[7] | |
| Runway Edge Lights[8] | HIRL / MIRL | | MIRL/LIRL | |
| Parallel Taxiway [9] | Required | | Recommended | |
| Approach Lights[10] | *Required*[11] | | Recommended | |
| Runway Design Standards; e.g., Obstacle Free Zone (OFZ) [12] | <3/4-statute mile approach visibility minimums | ≥ 3/4-statute mile approach visibility minimums | | |
| Threshold Siting Criteria To Be Met [13] | Table A2-1, Row 4 and 9, Criteria | | Appendix 2, Table A2-1, Lines 4 and 8, Criteria | |
| Survey Required for Lowest Minima | Vertically Guided Airport Airspace Analysis Survey | | | |

- Determine based on level of visibility the ***airport requires*** … not every airport needs the lowest visibility
- LPV approaches are defined as **APV** approaches, so **typically** Table A16-1B Airport Infrastructure applies.
- Parallel Taxiways are required for an instrument procedure with less than 1 statue mile visibility

# LPV Approaches to 200 foot DA

**Table A16-1A. Precision Instrument Approach Requirements.**

| | | |
|---|---|---|
| **Visibility Minimums[1]** | <3/4 statute mile | < 1-statute mile |
| **Height Above Touchdown (HAT)[2]** | 200 | |
| **TERPS Glidepath Qualification Surface (GQS)[3]** | Table A2-1, Row 7, Criteria, and Appendix 2, par. 5a Clear | |
| **TERPS precision "W" surfaces [4]** | Clear | See Note 5 |
| **TERPS Paragraph 251** | 34:1 Clear | 20:1 Clear |
| **Precision Obstacle Free Zone (POFZ) 200 x 800[6]** | Required | Not Required |
| **Airport Layout Plan[7]** | Required | |
| **Minimum Runway Length** | 4,200 ft (1,280 m) (Paved) | |
| **Runway Markings (See AC 150/5340-1)** | Precision | Nonprecision |
| **Holding Position Signs & Markings (See AC 150/5340-1 and AC 150/5340-18)** | Precision | Nonprecision |
| **Runway Edge Lights[8]** | HIRL / MIRL | |
| **Parallel Taxiway [9]** | Required | |
| **Approach Lights[10]** | MALSR, SSALR, or ALSF | Recommended |
| **Runway Design Standards; e.g., Obstacle Free Zone (OFZ) [11]** | < 3/4-statute mile approach visibility minimums | ≥ 3/4-statute mile approach visibility minimums |
| **Threshold Siting Criteria To Be Met [12]** | Table A2-1, Row 9, Criteria | Table A2-1, Row 8, Criteria |
| **Survey Required for Lowest Minima** | Vertically Guided Airport Airspace Analysis Survey | |

- LPV approaches to a Decision Altitude of 200 feet are authorized where the appropriate ILS infrastructure is in place.
- At locations where the proposed procedure would not be an overlay of an ILS, the requirements of Appendix 16, Table 16-1A must be met

***Precision Infrastructure for a 200 foot DA***

# How does the Airport Environment affect the Minimums?

- Obstacle Free Zones
- Glidepath Qualification Surface (GQS)
- Runway Lighting and Markings
- Taxiway Considerations
- Airport Surveys

# Glidepath Qualification Surface

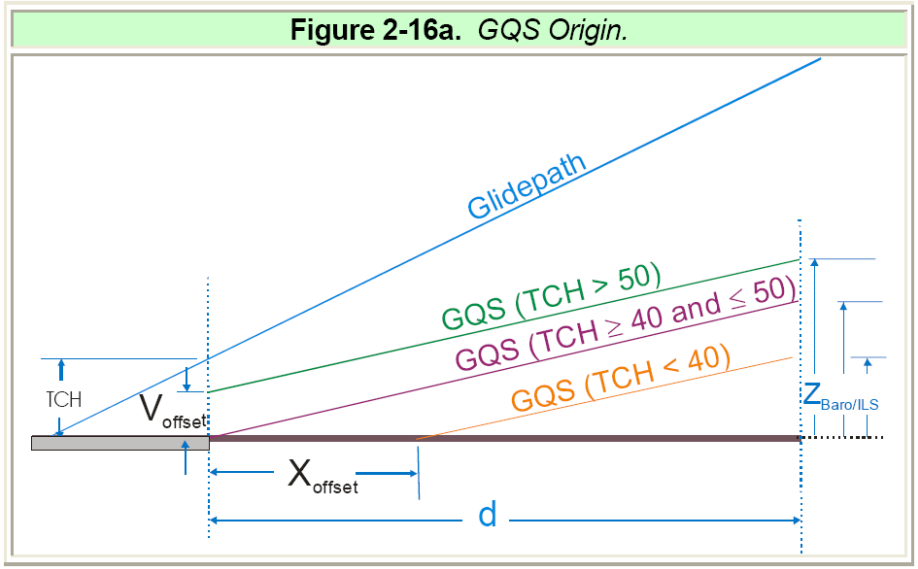


- The GQS applies to approach procedures providing vertical path guidance.
- It limits the magnitude of penetration of the obstruction clearance surfaces overlying the final approach course.
- The intent is to provide a descent path from DA to landing free of obstructions that could destabilize the established glidepath angle.

# Glidepath Qualification Surface

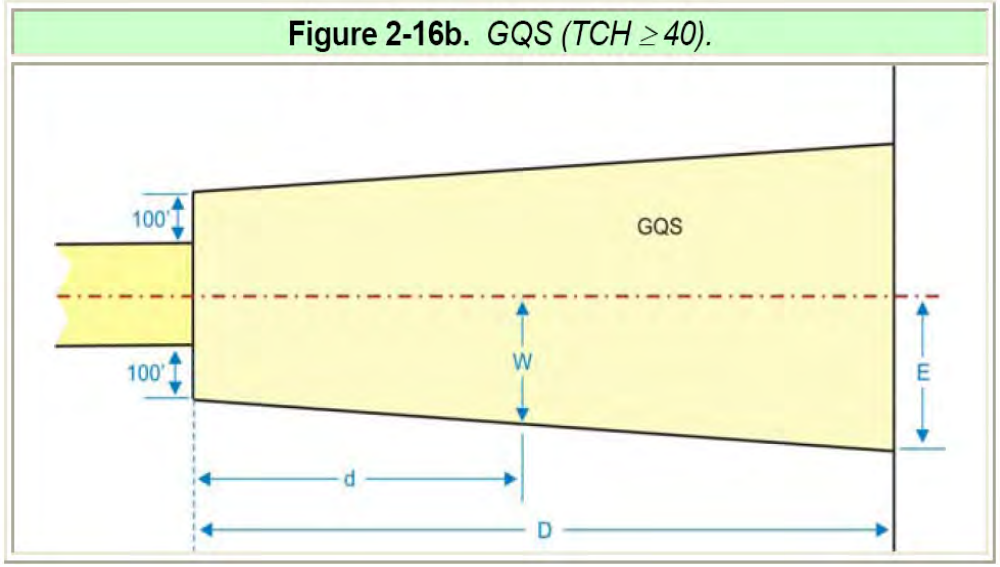


- . The GQS is centered on a course from the DA point to the runway threshold.
- If the GQS is penetrated, vertical guidance instrument approach procedures (ILS/MLS/WAAS/LAAS/Baro-VNAV) are not authorized

# Runway Edge Lights

**Table A16-1B. Approach Procedure With Vertical Guidance (APV-RNP) Approach Requirements**

| Visibility Minimums[1] | < 3/4-statute mile | < 1-statute mile | 1-statute mile | >1-statute mile[14] |
|---|---|---|---|---|
| Height Above Touchdown (HAT)[2] | 250 | 300 | 350 | 400 |
| TERPS Glidepath Qualification Surface (GQS)[3] | Table A2-1, Row 7, Criteria, and Appendix 2, par. 5a Clear | | | |
| TERPS Paragraph 251 | 34:1 clear | 20:1 clear | 20:1 clear, or penetrations lighted for night minimums (See AC 70/7460-1) | |
| Precision Obstacle Free Zone (POFZ) 200 x 800[4] | Required | Recommended | | |
| Airport Layout Plan[5] | Required | | | |
| Minimum Runway Length | 4,200 ft (1,280 m) (Paved) | 3,200 ft (975 m)[6] (Paved) | 3,200 ft (975 m)[6,7] | |
| Runway Markings (See AC 150/5340-1) | Precision | Nonprecision *(precision recommended)* | Nonprecision[7] | |
| Holding Position Signs & Markings (See AC 150/5340-1 and AC 150/5340-18) | Precision | Nonprecision *(precision recommended)* | Nonprecision[7] | |
| Runway Edge Lights[8] | HIRL / MIRL | | MIRL/LIRL | |
| Parallel Taxiway [9] | Required | | Recommended | |
| Approach Lights[10] | *Required*[11] | | Recommended | |
| Runway Design Standards; e.g., Obstacle Free Zone (OFZ) [12] | <3/4-statute mile approach visibility minimums | ≥ 3/4-statute mile approach visibility minimums | | |
| Threshold Siting Criteria To Be Met [13] | Table A2-1, Row 4 and 9, Criteria | | Appendix 2, Table A2-1, Lines 4 and 8, Criteria | |
| Survey Required for Lowest Minima | Vertically Guided Airport Airspace Analysis Survey | | | |

- Required for night minimums
- High intensity lights are required for RVR-based minimums.

# Runway Markings and Signs

**Table A16-1B. Approach Procedure With Vertical Guidance (APV-RNP) Approach Requirements**

| Visibility Minimums[1] | < 3/4-statute mile | < 1-statute mile | 1-statute mile | >1-statute mile[14] |
|---|---|---|---|---|
| Height Above Touchdown (HAT)[2] | 250 | 300 | 350 | 400 |
| TERPS Glidepath Qualification Surface (GQS)[3] | Table A2-1, Row 7, Criteria, and Appendix 2, par. 5a Clear | | | |
| TERPS Paragraph 251 | 34:1 clear | 20:1 clear | 20:1 clear, or penetrations lighted for night minimums (See AC 70/7460-1) | |
| Precision Obstacle Free Zone (POFZ) 200 x 800[4] | Required | Recommended | | |
| Airport Layout Plan[5] | Required | | | |
| Minimum Runway Length | 4,200 ft (1,280 m) (Paved) | 3,200 ft (975 m)[6] (Paved) | 3,200 ft (975 m)[6,7] | |
| Runway Markings (See AC 150/5340-1) | Precision | Nonprecision *(precision recommended)* | Nonprecision[7] | |
| Holding Position Signs & Markings (See AC 150/5340-1 and AC 150/5340-18) | Precision | Nonprecision *(precision recommended)* | Nonprecision[7] | |
| Runway Edge Lights[8] | HIRL / MIRL | | MIRL/LIRL | |
| Parallel Taxiway [9] | Required | | Recommended | |
| Approach Lights[10] | *Required*[11] | | Recommended | |
| Runway Design Standards; e.g., Obstacle Free Zone (OFZ) [12] | <3/4-statute mile approach visibility minimums | ≥ 3/4-statute mile approach visibility minimums | | |
| Threshold Siting Criteria To Be Met [13] | Table A2-1, Row 4 and 9, Criteria | | Appendix 2, Table A2-1, Lines 4 and 8, Criteria | |
| Survey Required for Lowest Minima | Vertically Guided Airport Airspace Analysis Survey | | | |

- Precision markings are ***required*** when the expected visibility is less than ¾ SM
  - However, we highly recommend meeting the precision requirements when the expected visibility is less than 1 SM
- Non-precision markings are required for visibilities greater than 1 SM

# Parallel Taxiway

**Table A16-1B. Approach Procedure With Vertical Guidance (APV-RNP) Approach Requirements**

| **Visibility Minimums**[1] | < 3/4-statute mile | < 1-statute mile | 1-statute mile | >1-statute mile[14] |
|---|---|---|---|---|
| **Height Above Touchdown (HAT)**[2] | 250 | 300 | 350 | 400 |
| **TERPS Glidepath Qualification Surface (GQS)**[3] | Table A2-1, Row 7, Criteria, and Appendix 2, par. 5a Clear | | | |
| **TERPS Paragraph 251** | 34:1 clear | 20:1 clear | 20:1 clear, or penetrations lighted for night minimums (See AC 70/7460-1) | |
| **Precision Obstacle Free Zone (POFZ) 200 x 800**[4] | Required | Recommended | | |
| **Airport Layout Plan**[5] | Required | | | |
| **Minimum Runway Length** | 4,200 ft (1,280 m) (Paved) | 3,200 ft (975 m)[6] (Paved) | 3,200 ft (975 m)[6,7] | |
| **Runway Markings (See AC 150/5340-1)** | Precision | Nonprecision *(precision recommended)* | Nonprecision[7] | |
| **Holding Position Signs & Markings (See AC 150/5340-1 and AC 150/5340-18)** | Precision | Nonprecision *(precision recommended)* | Nonprecision[7] | |
| **Runway Edge Lights**[8] | HIRL / MIRL | | MIRL/LIRL | |
| **Parallel Taxiway**[9] | Required | | Recommended | |
| **Approach Lights**[10] | *Required*[11] | | Recommended | |
| **Runway Design Standards; e.g., Obstacle Free Zone (OFZ)**[12] | <3/4-statute mile approach visibility minimums | ≥ 3/4-statute mile approach visibility minimums | | |
| **Threshold Siting Criteria To Be Met**[13] | Table A2-1, Row 4 and 9, Criteria | | Appendix 2, Table A2-1, Lines 4 and 8, Criteria | |
| **Survey Required for Lowest Minima** | Vertically Guided Airport Airspace Analysis Survey | | | |

- Required when the expected visibility is less than 1 SM
- Parallel taxiway ***MUST*** go to the end

# Airport Surveys … What is required?

- ✓ **The Airports-GIS program is required for all *FAA funded* surveys including:**
  - Airport Planning and Design Activities
    - ALP updates
    - Airport Master Plans
    - Environmental and Noise Analysis
  - Airspace evaluation (obstructions to navigable airspace)
  - Airport Operating Area (AOA) construction activities (i.e. runway/taxiway)
  - NAVAID installation/relocation
  - Instrument procedure obstruction data
- ✓ **Guidance is published in AC 150/5300-16/17/18**
- ✓ **Recommended for all public use airports**
- ✓ **Encouraged and available for all airports including private**

# What minimums can we expect to achieve with WAAS?

| Approach Type | Height Above Threshold | Visibility |
|---|---|---|
| LPV | 250 feet | ¾ SM |
| | 200 feet | ½ SM |
| LNAV/VNAV | 250 feet | ¾ SM |
| LNAV | 250 | 1 SM |
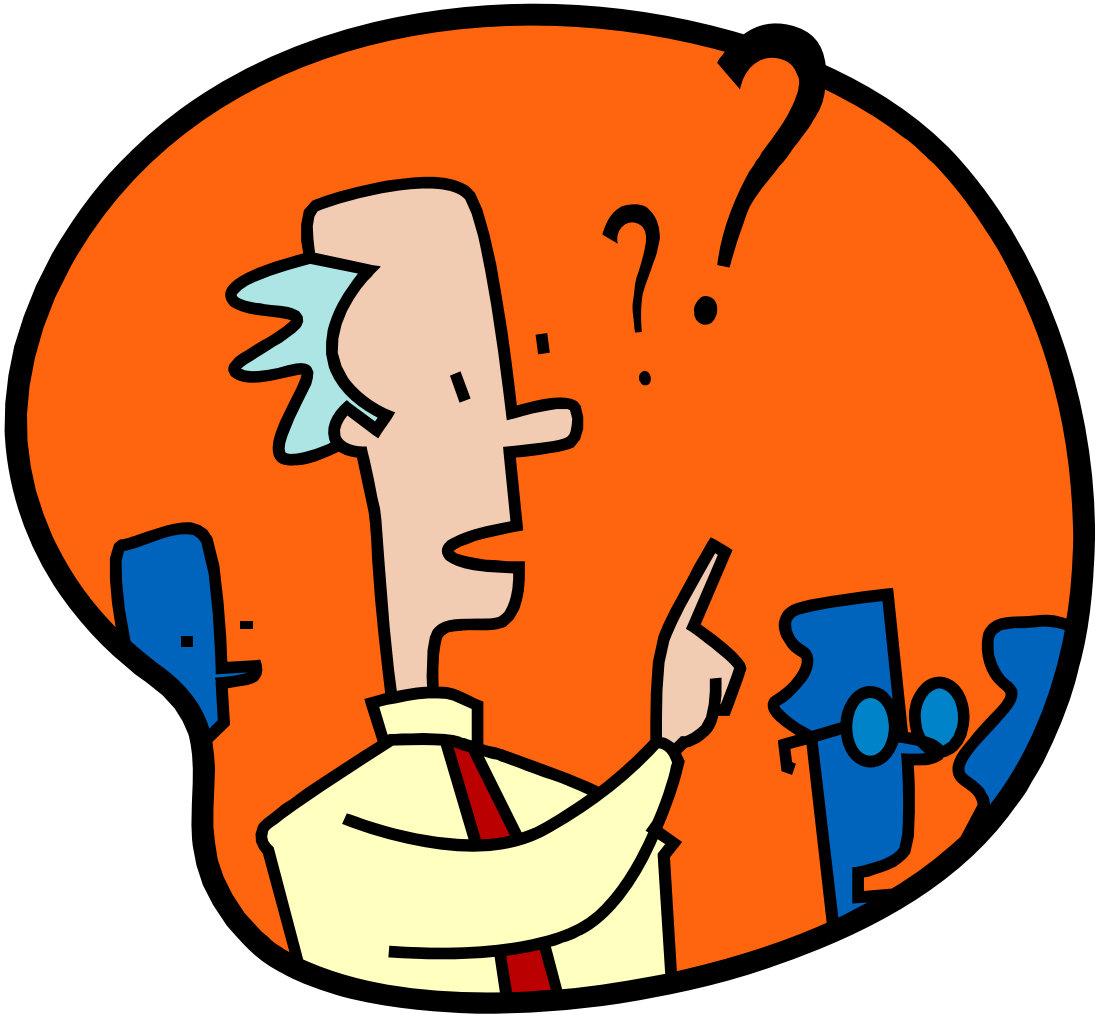
# Questions