Appendix 12. AIRPLANE DATA

1. BACKGROUND.

a. Airplane physical characteristics have operational and economic significance which materially affect an airport's design, development, and operation. Their consideration when planning a new airport or improving existing airport facilities maximizes their possible utilization and safety within expected demands. For example, they influence the design aspects of runways, taxiways, ramps, aprons, servicing facilities, gates, and life safety facilities. In addition, airport designers should consider anticipated growth in air traffic and the effects of near future model airplane operating weights and physical dimensions on ground operating areas.

b. Military airplanes frequently operate at civil airports. Joint-use airports should also meet the physical characteristics of military airplanes. Hence, during airport facility design, consider routine military operations such as medical evacuation, strategic deployment and dispersal, and Reserve and National Guard training missions.

c. Civil airplane versions of military counterparts are shown below.

MILITARY DESIGNATION	CIVIL DESIGNATION
C-7	DeHavilland Caribou
C-9A	McDonnell Douglas DC-9-30
C-12	Beech Huron
C-45	Twin Beech 18
C-46	Curtis-Wright Commando
C-47/R-5D	Douglas DC-3, Skytrain
C-54/R-4D	Douglas DC-4, Skymaster
C-97	Boeing Stratocruiser
C-118/R-6D	Douglas DC-6, Liftmaster
C-119	Fairchild/Republic Flying Box Car
C-121/R-7	Lockheed 749, 1049 Constellation
C-123	Fairchild/Republic Provider
C-130	Lockheed L-382 Hercules
C-131, T-29	Convair 240/340/580
C-135	Boeing 707-120B, Starlifter
C-137, VC-137B, C	Boeing 707-320B
C-140	Lockheed 1329 JetStar
C-141	Lockeed StarLifter
E-4	Boeing 747-200B
KC-10A	McDonnell Douglas, DC-10-30CF, Extender
KC-135A	Boeing 707, Stratotanker
P-3	Lockheed L-188 Electra, 185/285 Orion
T-34	Beech Mentor
T-37	Cessna 318
T-39	Rockwell International NA-265-40 Sabreliner
T-42	Beech Cochise
T-43A	Boeing 737-200
T-47A	Cessna 552
U-3	Cessna 310/T310
U-9	Aero Commander 560
U-18	DeHavilland Twin Otter

2. EXPLANATORY INFORMATION.

a. Presentation of data is in three forms:

(1) Figures A12-1 to A12-8 are representatives of general types of airplanes and not a specific model.

(2) Most figures illustrate a particular model with its specific data.

(3) Some figures present data for several similar models or series of airplanes by a single representative drawing (e.g., General Dynamics/Convair 880 and 990).

b. The alpha-symbols in the data tables and drawings use the following list of airplane physical characteristics:

Alpha-Symbol	Airplane Physical Characteristics
A	Wingspan
B	Length Overall
C	Height Overall
D	Wheelbase
E	Nose to centerline of main gear
F	Wheel track (tread)
G	Centerline of fuselage to centerline of inboard engine
H	Centerline of fuselage to centerline of outboard engine
J	Outside of main gear to wingtip
K	Vertical clearance of inboard engine or propeller at maximum weight
L	Vertical clearance of outboard engine or propeller at maximum weight
M	Centerline of fuselage to approximate pivot point based on maximum nosewheel steering angle or locked wheels
N	Vertical clearance of wingtip at maximum weight
P	Height of exhaust of jet engine on centerline of fuselage (three-engine jet airplane only)

c. Measurement of turn radius is either at maximum nosewheel steering angle or with locked wheels, whichever produces the larger radius. It is a horizontal measurement from the pivot point to the farthest point of the airplane during execution of a turn. This dimension represents a maximum effort maneuver not normally used by the airlines due to excessive tire wear. THIS DIMENSION IS NOT FOR AIRPORT FACILITY DESIGN PURPOSES. Contact the airline(s) involved for the turn radius to use for design purposes.

d. The abbreviation "SRS" denotes "series."

e. The abbreviation "NA" denotes "datum is not available."

f. The weight and dimensional information for transport type airplanes are from aircraft manufacturer publications titled "Airplane Characteristics, Airport Planning." Each airplane model has a publication that is available from its manufacturer. Since each publication has considerably more information of interest to an airport designer than assembled in this advisory circular, revisions are frequent. For example, weight and dimensional data is subject to change as a result of modifications and improvements to the airplane that differs from this advisory circular. Hence, it is advisable during airport facility planning and design to contact manufacturers of applicable airplanes.

BUILDER	MODEL	NAME	MAXIMUM TAKEOFF WEIGHT	MAXIMUM LANDING WEIGHT	A	B	C	D	F	NUMBER SEATS	TURN RADIUS
BELLANCA	7	CITABRIA	1,650 LB 748 KG	1,650 LB 748 KG	33'5" 10.19M	22'8" 6.91M	6'8" 2.03M	16'1" 4.90M	6'4" 1.93M	2	
CESSNA	120 140		1,450 LB 658 KG	1,450 LB 658 KG	32'10" 10.00M	21'0" 6.40M	6'3" 1.91M		6'5" 1.96M	2	
	170		2,200 LB 998 KG	2,200 LB 998 KG	36'0" 10.97M	25'0" 7.60M	6'7" 2.00M			4	
	180 185	SKYWAGON	2,800 LB 1 270 KG	2,800 LB 1,270 KG	36'2" 11.04M	25'9" 7.85M	7'9" 2.34M		7'8" 2.31M	4	21'10" 6.65M
	190 195		3,350 LB 1 520 KG	3,350 LB 1,520 KG	36'2" 11.04M	27'1" 8.26M	7'2" 2.16M			4	
HELIO AIRCRAFT	H-250 H-295	HELIO COURIER	3,400 LB 1,542 KG	3,400 LB 1,542 KG	39'0" 10.87M	31'6" 9.59M	8'10" 2.70M	23'5" 7.22M	9'0" 2.75M	6	
	HST-550	HELIO STALLION	5,000 LB 2 268 KG	5,100 LB 2,313 KG	41'0" 12.49M	39'7" 11.04M	9'3" 2.83M		9'8" 2.96M	11	

MODEL 185 HAS MAXIMUM WEIGHTS OF 3,350 LB (1 520 KG) AND 6 SEATS.
MODEL 195 HAS LENGTH OF 27'4" (8.33M).

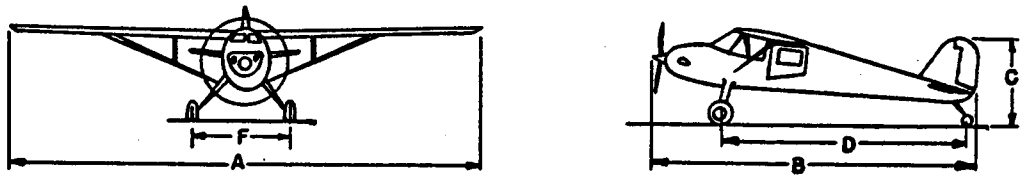

Figure A12-1. Single engine, high wing, tailwheel airplanes 8,000 lb. (3,628 Kg) or less

BUILDER	MODEL	NAME	MAXIMUM TAKEOFF WEIGHT	MAXIMUM LANDING WEIGHT	A	B	C	D	F	NUMBER SEATS	TURN RADIUS
PIPER	PA-12, 14, 15	SUPER CRUISER	1,750 LB 794 KG	1,750 LB 794 KG	35'6" 10.80M	22'6" 6.85M	6'10" 2.08M		6'3" 1.91M	3	20'8" 6.29M
	PA-18	SUPER CUB	1,500 LB 680 KG	1,500 LB 680 KG	35'3" 10.72M	22'5" 6.83M	6'8" 2.03M			2	20'7" 2.26M
	PA-20	PACER	1,650 LB 748 KG	1,650 LB 748 KG	29'4" 8.90M	20'5" 6.20M	6'3" 1.91M			4	
SILVAIRE	8		1,400 LB 635 KG	1,400 LB 635 KG	35'0" 10.67M	20'0" 6.10M	6'3" 1.91M		6'4" 1.93M	2	
TAYLOR-CRAFT	BC-12		1,150 LB 522 KG	1,150 LB 522 KG	36'0" 10.97M	22'0" 6.72M	6'8" 2.03M		6'0" 1.83M	2	
UNIVAIR AIRCRAFT	108	VOYAGER	2,150 LB 975 KG	2,150 LB 975 KG	33'11" 10.34M	24'6" 7.46M	6'10" 2.08M	18'7" 5.66M	7'1" 2.16M	4	20'6" 2.24M

NOTE: MODEL PA-20 MAY HAVE MAXIMUM WEIGHTS OF 1,800 LB (816 KG).

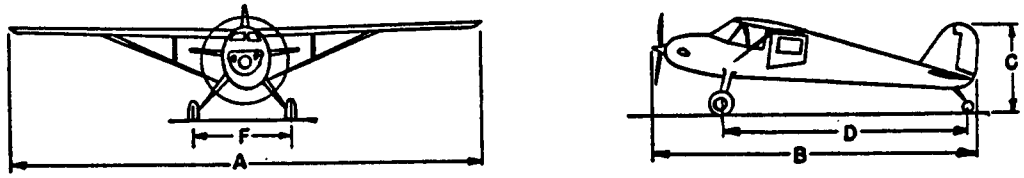

Figure A12-2. Single engine, high wing, tailwheel airplanes 8,000 lb. (3,628 Kg) or less (cont'd)

BUILDER	MODEL	NAME	MAXIMUM TAKEOFF WEIGHT	MAXIMUM LANDING WEIGHT	A	B	C	D	F	NUMBER SEATS	TURN RADIUS
BEDE AIRCRAFT	BD-4		1,400 LB 635 KG	1,400 LB 635 KG	25'6" 7.77M	21'11" 6.68M	6'3" 1.91M		8'3" 2.51M	4	
CESSNA	150		1,600 LB 726 KG	1,600 LB 726 KG	32'9" 9.98M	23'10" 7.26M	8'0" 2.44M	4'10" 1.48M	6'7" 2.01M	2	19'10" 6.05M
	172	SKYHAWK	2,300 LB 1 043 KG	2,300 LB 1 043 KG	35'10" 10.93M	26'11" 8.20M	8'10" 2.84M	5'4" 1.63M	7'2" 2.23M	4	19'8" 6.00M
	177	CARDINAL	2,500 LB 1 134 KG	2,500 LB 1 134 KG	35'6" 10.82M	27'2" 8.28M	8'6" 2.59M	6'5" 1.96M	8'4" 2.54M	4	
	182	SKYLANE	2,950 LB 1 338 KG	2,950 LB 1 338 KG	35'10" 10.93M	28'1" 8.56M	8'11" 2.72M	5'7" 1.70M	8'0" 2.44M	4	21'4" 6.50M
	206	STATIONAIR	3,600 LB 1 633 KG	3,600 LB 1 633 KG	35'10" 10.93M	28'0" 8.53M	9'8" 2.95M	6'11" 2.11M	8'2" 2.49M	6	
	207	SUPER SKYWAGON	3,800 LB 1 724 KG	3,800 LB 1 724 KG	35'10" 10.93M	31'9" 9.68M	9'7" 2.92M		10'0" 3.04M	6	
	210	CENTURION	3,800 LB 1 724 KG	3,800 LB 1 724 KG	36'9" 11.20M	28'3" 8.61M	9'8" 2.95M	5'9" 1.76M	8'6" 2.59M	6	22'5" 6.84M
PIPER	PA-22	TRI-PACER	1,800 LB 816 KG	1,800 LB 816 KG	29'4" 8.97M	20'4" 6.20M	6'3" 1.91M			3	19'11" 6.07M

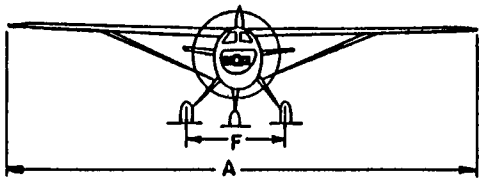

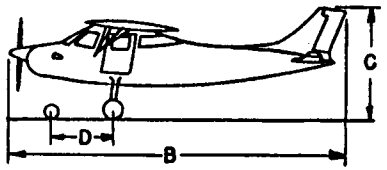

Figure A12-3. Single engine, high wing, tricycle gear airplanes 8,000 lb. (3,628 Kg) or less

BUILDER	MODEL	NAME	MAXIMUM TAKEOFF WEIGHT	MAXIMUM LANDING WEIGHT	A	B	C	D	F	NUMBER SEATS	TURN RADIUS
AEROSTAR AVIATION	415	ERCOUPE	1,450 LB 658 KG	1,450 LB 658 KG	30'0" 9.14M	20'7" 6.27M	6'3" 1.91M	5'4" 1.63M	7'9" 2.36M	2	18'9" 5.71M
	M-20		2,525 LB 1 145 KG	2,525 LB 1 145 KG	35'0" 10.67M	23'7" 7.06M	8'4" 2.54M	5'7" 1.70M	9'1" 2.77M	4	22'1" 6.72M
	M-22	MARK 22	3,680 LB 1 669 KG	3,680 LB 1 669 KG	35'0" 10.67M	27'0" 8.23M	9'10" 3.00M	8'3" 2.51M	11'0" 3.35M	5	
BEECH-CRAFT	23	MUSKETEER	2,450 LB 1 111 KG	2,200 LB 998 KG	32'9" 9.98M	25'0" 7.62M	8'3" 2.51M	6'4" 1.91M	11'10" 3.61M	4	
	V-35B	BONANZA	3,400 LB 1 542 KG	3,400 LB 1 542 KG	33'6" 10.21M	26'5" 8.05M	6'7" 2.01M	7'0" 2.13M	9'7" 2.92M	4	21'6" 6.55M
	F-33	BONANZA	3,050 LB 1 383 KG	3,050 LB 1 383 KG	32'10" 10.00M	25'6" 7.77M	8'3" 2.51M	7'5" 2.26M	9'7" 2.92M	5	21'3" 6.48M
	F-33A	BONANZA	3,400 LB 1 542 KG	3,400 LB 1 542 KG	33'6" 10.21M	26'8" 8.13M	8'3" 2.51M	7'5" 2.26M	9'7" 2.92M	5	21'3" 6.48M
DELLANCA	260 300	VIKING	3,000 LB 1 361 KG	3,000 LB 1 361 KG	24'2" 10.41M	23'6" 7.15M	7'4" 2.23M	6'8" 2.03M	9'0" 2.75M	4	

NOTE: MODEL M-20 MAY BE KNOWN AS: CHAPARRAL, EXECUTIVE, MUSTANG, RANGER, STATESMAN.

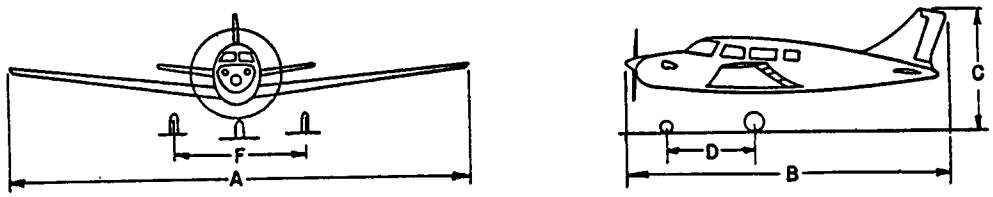

Figure A12-4. Single engine, low wing, tricycle gear airplanes 8,000 lb. (3,628 Kg) or less

BUILDER	MODEL	NAME	MAXIMUM TAKEOFF WEIGHT	MAXIMUM LANDING WEIGHT	A	B	C	D	F	NUMBER SEATS	TURN RADIUS
GRUMMAN	AA-1	YANKEE	1,500 LB 680 KG	1,500 LB 680 KG	24'6" 7.47M	19'3" 5.87M	6'10" 2.08M	4'5" 1.35M	8'3" 2.51M	2	
MAVION	G-1	RANGE-MASTER	3,315 LB 1 504 KG	3,150 LB 1 489 KG	34'9" 10.59M	27'6" 8.38M	8'4" 2.54M	5'8" 1.74M	8'9" 2.67M	4	
PIPER	PA-24	COMMANCHE	2,550 LB 1 157 KG	2,550 LB 1 157 KG	36'0" 10.97M	24'9" 7.54M	7'5" 2.25M	6'7" 2.01M	9'8" 2.94M	4	22'10" 6.96M
	PA-28-180	CHEROKEE	2,400 LB 1 089 KG	2,400 LB 1 089 KG	30'0" 9.14M	23'6" 7.16M	7'4" 2.22M	6'3" 1.89M	10'0" 3.04M	4	20'0" 6.08M
	PA-28-200	CHEROKEE ARROW	2,600 LB 1 179 KG	2,600 LB 1 179 KG	30'0" 9.14M	24'2" 7.37M	8'0" 2.44M	7'5" 2.26M	10'6" 3.20M	5	20'3" 6.17M
	PA-32	CHEROKEE SIX	3,400 LB 1 542 KG	3,400 LB 1 542 KG	32'10" 10.00M	27'9" 8.45M	7'11" 2.41M	7'10" 2.39M	10'7" 3.22M	6	21'9" 6.63M
ROCKWELL INTERNAT.	112		2,475 LB 1 127 KG	2,475 LB 1 127 KG	35'0" 10.67M	27'2" 8.28M	10'1" 3.07M		7'2" 2.18M	4	

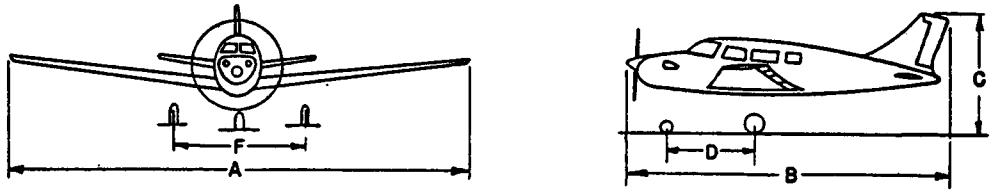

Figure A12-5. Single engine, low wing, tricycle gear airplanes 8,000 lb. (3,628 Kg) or less (cont'd)

BUILDER	MODEL	NAME	MAXIMUM TAKEOFF WEIGHT	MAXIMUM LANDING WEIGHT	A	B	C	D	F	NUMBER SEATS	TURN RADIUS
AEROSTAR AVIATION	600 601	AEROSTAR	5,500 LB 2 495 KG	5,500 LB 2 495 KG	34'3" 10.44M	34'10" 10.62M	12'2" 3.71M		10'3" 3.12M	5	
BEECH-CRAFT	B-55	BARRON	5,100 LB 2 313 KG	5,100 LB 3 313 KG	37'10" 11.53M	28'0" 8.53M	9'2" 2.79M	7'0" 2.13M	7'0" 2.13M	4	23'8" 7.21M
	E-55	BARRON	5,300 LB 2 404 KG	5,300 LB 2 404 KG	37'10" 11.53M	29'0" 8.88M	9'2" 2.79M	8'0" 2.44M	8'0" 2.44M	4	23'8" 7.21M
	B-60	DUKE	6,775 LB 3 073 KG	6,775 LB 3 073 KG	39'3" 11.96M	33'10" 10.32M	12'4" 3.76M	9'3" 2.82M	11'0" 3.35M	6	
CESSNA	310		5,100 LB 2 313 KG	5,100 LB 2 313 KG	37'6" 11.43M	29'7" 9.02M	9'11" 3.03M	9'6" 2.90M	12'0" 3.66M	6	24'0" 7.31M

NOTE: E-55 TURBO HAS MAXIMUM WEIGHTS OF 5,900 LB (2 676 KG).
310 TURBO HAS MAXIMUM WEIGHTS OF 5,500 LB (2 495 KG).

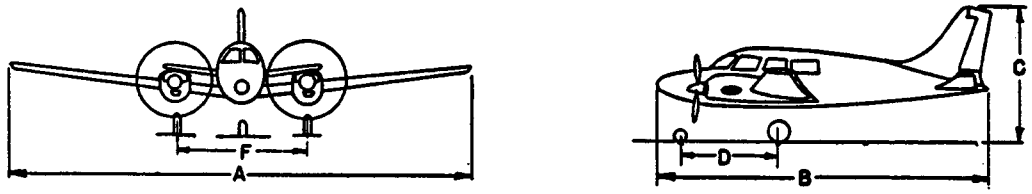

Figure A12-6. Twin engine, low or mid wing, tricycle gear airplanes 8,000 lb. (3,628 Kg) or less

BUILDER	MODEL	NAME	MAXIMUM TAKEOFF WEIGHT	MAXIMUM LANDING WEIGHT	A	B	C	D	F	NUMBER SEATS	TURN RADIUS
CESSNA	401, 402, 421	TWIN CESSNA	6,300 LB 2 858 KG	6,200 LB 2 812 KG	39'10" 12.27M	36'2" 11.02M	11'8" 3.56M	10'6" 3.20M	14'8" 4.47M	6	
PIPER	PA-23-160	APACHE	3,800 LB 1 724 KG	3,800 LB 1 724 KG	37'2" 11.32M	27'5" 8.34M	9'6" 2.87M	7'6" 2.28M	11'0" 3.35M	5	24'0" 7.31M
	PA-23-250	AZTEC	4,800 LB 2 177 KG	4,800 LB 2 177 KG	37'0" 11.27M	27'7" 8.42M	10'4" 3.15M	7'6" 2.28M	11'4" 3.45M	6	24'0" 7.31M
	PA-30	TWIN COMMANCHE	3,600 LB 1 633 KG	3,600 LB 1 633 KG	36'0" 10.97M	25'2" 7.67M	8'3" 2.51M	7'4" 2.23M	9'10" 2.98M	4	22'8" 6.90M
	PA-31	NAVAJO	6,200 LB 2 812 KG	6,200 LB 2 812 KG	40'8" 12.40M	32'8" 9.94M	13'0" 3.96M	8'8" 2.64M	13'9" 4.19M	7	27'3" 8.32M

NOTE: MODEL (421) HAS OPTIONAL TAKEOFF WEIGHT OF 6,350 LB (2 880 KG).
(421B) 7,450 LB (3 379 KG).

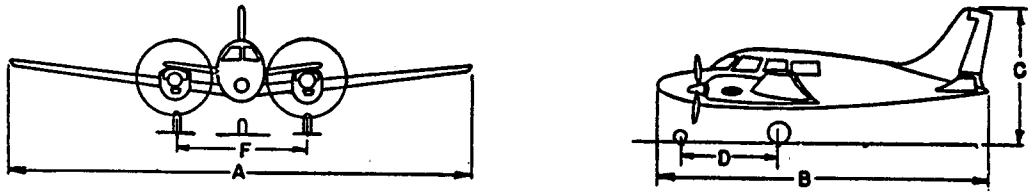

Figure A12-7. Twin engine, low or mid wing, tricycle gear airplanes 8,000 lb. (3,628 Kg) or less (cont,d)

BUILDER	MODEL	NAME	MAXIMUM TAKEOFF WEIGHT	MAXIMUM LANDING WEIGHT	A	B	C	D	F	NUMBER SEATS	TURN RADIUS
CESSNA	336	SUPER	4,630 LB	4,400 LB	38'2"	29'10"	9'4"	7'10"	8'2"	4	
	337	SKYMASTER	2 100 KG	1 996 KG	11.85M	9.10M	2.85M	2.39M	2.48M		
ROCKWELL INTERNAT.	500	AERO COMMANDER	6,500 LB	6,500 LB	49'6"	35'1"	14'6"		12'11"	7	31'2"
			2 948 KG	2 948 KG	15.09M	10.69M	4.42M		3.94M		9.50M
	560, 680	GRAND	7,700 LB	7,700 LB	49'1"	36'7"	14'6"	14'0"	12'11"	7	
	SHRIKE	SHRIKE CDR	3 493 KG	3 493 KG	14.96M	11.15M	4.42M	4.28M	3.94M		

NOTE: SHRIKE COMMANDER HAS MAXIMUM WEIGHTS OF 6,750 LB (3 062 KG).
MODEL 681, TURBO II, HAWK COMMANDER HAS WINGSPAN OF 44'0" (13.41M) AND MAXIMUM WEIGHTS OF 9,400 LB (4 264 KG); OTHERWISE AS MODEL 560.

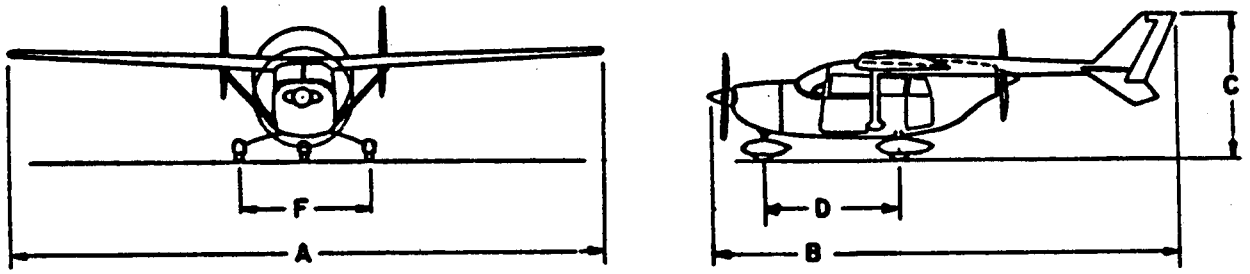

CESSNA SUPER SKYMASTER.

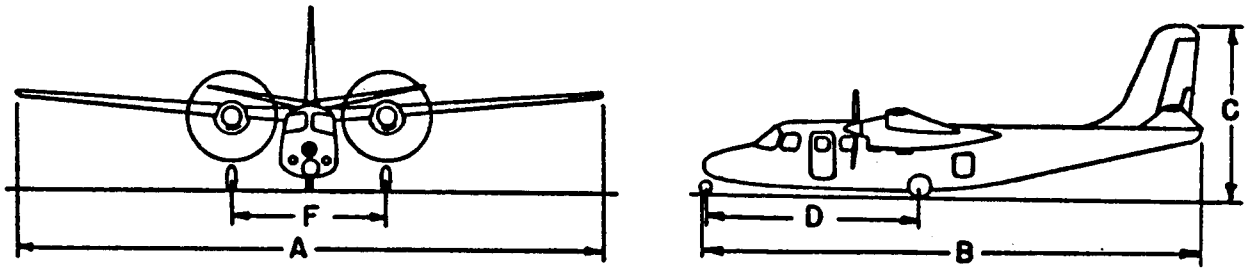

ROCKWELL INTERNATIONAL AERO COMMANDER SERIES.

Figure A12-8. Twin engine, high or mid wing, tricycle gear airplanes 8,000 lb. (3,628 Kg) or less

MODEL	MAXIMUM TAKEOFF WEIGHT	MAXIMUM LANDING WEIGHT	A	B	C	D	E	F	G	J	K	M	N	TURN RADIUS
MOHAWK 298	23,480 LB 10 653 KG	22,710 LB 10 301 KG	71'11" 21.92M	63'4" 19.30M	20'5" 6.22M	23'9" 7.24M	29'9" 9.07M	10'3" 3.12M	9'8" 2.95M	30'5" 9.27M	5'5" 1.65M	5.2" 1.60M	12'6" 3.84M	41'1" 12.52M

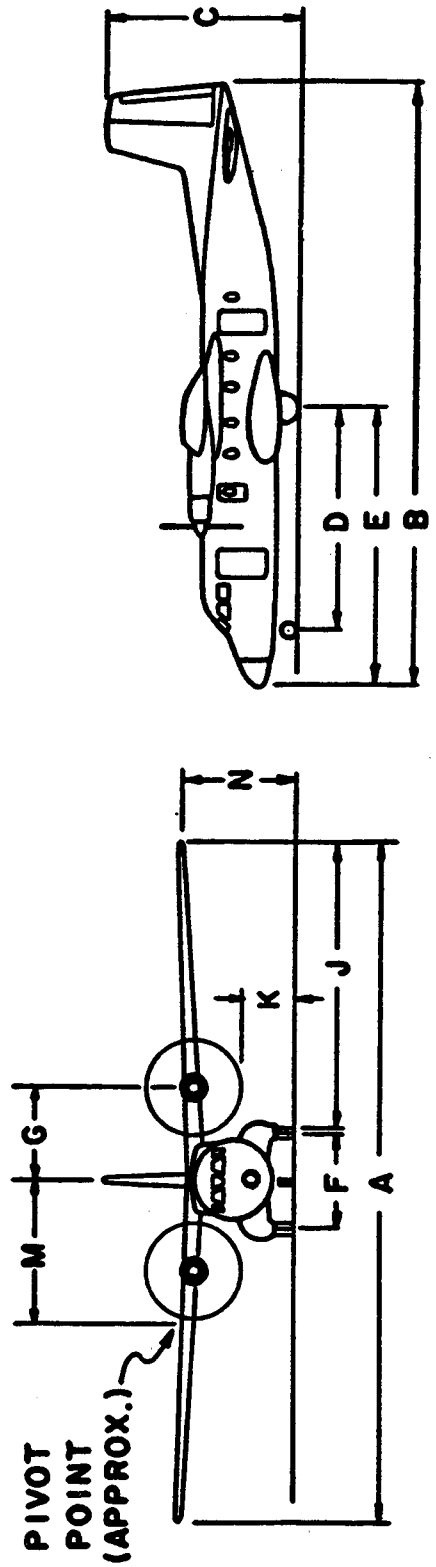

Figure A12-9. Aérospatiale Nord 262

MODEL	MAXIMUM TAKEOFF WEIGHT	MAXIMUM LANDING WEIGHT	A	B	C	D	E	F	G	J	K	M	N	TURN RADIUS
CARAVELLE	114,640 LB 52 000 KG	104,990 LB 47 623 KG	112'6" 34.29M	105'0" 32.00M	28'7" 8.72M	38'6" 11.74M	55'6" 16.92M	17'1" 5.21M	7'10" 2.39M	46'7" 14.20M	7'2" 2.18M	33'2" 10.11M	7'5" 2.26M	90'3" 27.51M

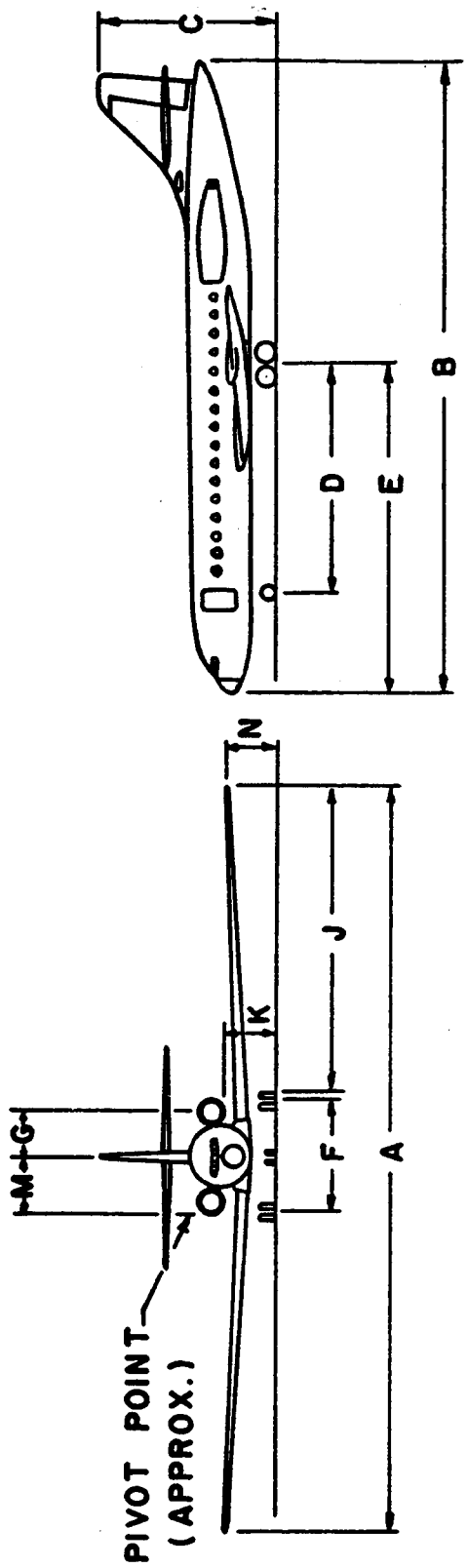

Figure A12-10. Aérospatiale/Sud SE-210 Caravelle

MODEL	MAXIMUM TAKEOFF WEIGHT	MAXIMUM LANDING WEIGHT	A	B	C	D	E	F	G	J	K	M	N	TURN RADIUS
A-300 -B2	302,000 LB 136 985 KG	281,000 LB 127 459 KG	147'1" 44.83M	175'6" 53.49M	55'6" 16.92M	60'10" 18.54M	82'8" 25.20M	31'6" 9.60M	26'0" 79.2M	55'10" 17.02M	2'7" 0.79M	37'3" 11.35M	19'4" 5.89M	113'6" 34.59M
A-300 -B4	330,700 LB 150 003 KG	293,200 LB 132 993 KG	147'1" 44.83M	175'6" 53.49M	55'6" 16.92M	60'10" 18.54M	82'8" 25.20M	31'6" 9.60M	26'0" 7.92M	55'5" 16.89M	2'7" 0.79M	37'3" 11.35M	19'4" 5.89M	113'6" 34.59M
A-300 -600	363,763 LB 165 000 KG	304,238 LB 138 000 KG	147'1" 44.83M	177'6' 54.08M	54'8" 16.66M	61'1" 18.26M	82'11" 25.27M	31'6" 9.60M	26'0" 7.92M	55'5" 16.89M	3'3" 0.98M	37'11" 11.55M	18'9" 5.70M	109'3" 33.31M
A-310 -300	330,693 LB 150 000 KG	271,169 LB 123 000 KG	144'1" 43.90M	153'2" 46.67M	52'4" 15.95M	49'11" 15.21M	71'9" 21.87M	31'6" 9.60M	25'3" 7.70M	54'2" 16.51M	2'2" 0.65M	34'2" 10.41M	16'11" 5.17M	108'2" 32.97M
A-320 -100	145,505 LB 66 000 KG	134,482 LB 61 000 KG	111'3" 39.91M	123'3" 37.57M	39'1" 11.91M	41'6" 12.64M	58'1" 17.70M	24'11" 7.59M	18'10" 5.74M	40'10" 12.45M	1'10" 0.55M	15'1" 4.61M	13'5" 4.08M	72'3" 21.99M

NOTE: A-310-200 HAS OPTIONAL (TAKEOFF) WEIGHT OF 305,560 LB (138 610 KG) AND 313,055 LB (141 999 KG).
(LANDING) 268,965 LB (122 000 KG).

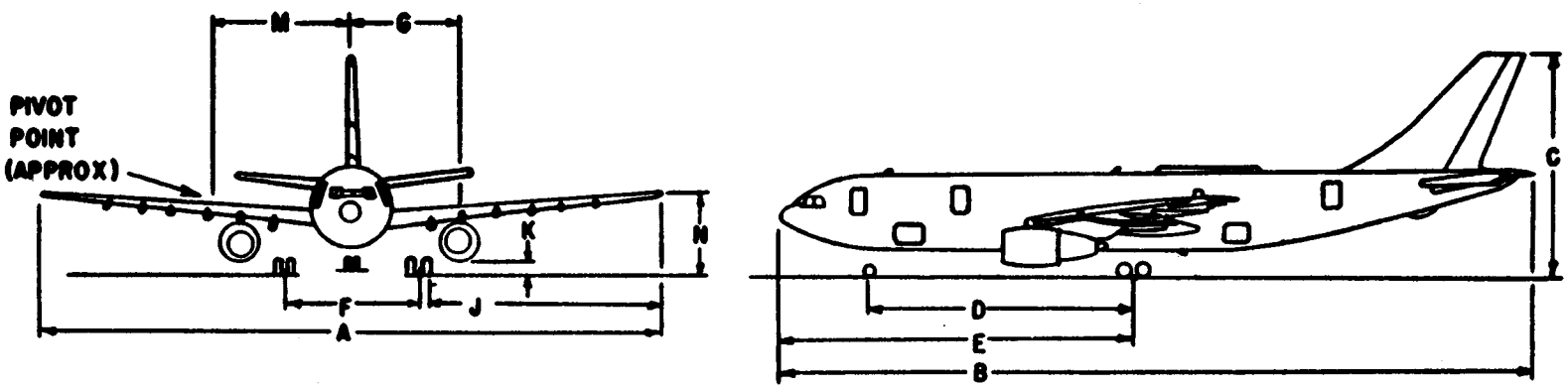

Figure A12-11. Airbus Industries A300, 310, and 320

MODEL	MAXIMUM TAKEOFF WEIGHT	MAXIMUM LANDING WEIGHT	A	B	C	D	E	F	G	J	K	H	N	TURN RADIUS
ATR-42 200	34,725 LB 15 751 KG	34,170 LB 15 499 KG	80'7" 24.56M	74'5" 22.68M	25'5" 7.75M	28'10" 8.79M	34'4" 10.46M	13'5" 4.09"	13'3" 4.04M	32'5" 9.88M	3'6" 1.07M	16'8" 5.08M	12'1" 3.68M	57'1" 17.40M
ATR-42 300	35,605 LB 16 150 KG	35,275 LB 16 000 KG	80'7" 24.56M	74'5" 22.68M	25'5" 7.75M	28'10" 8.79M	34'4" 10.46M	13'5" 4.09M	13'3" 4.04M	32'5" 9.88M	3'6" 1.07M	16'8" 5.08M	12'1" 3.68M	57'1" 17.40M
ATR-72	44,070 LB 19 990 KG	43,870 LB 19 899 KG	88'9" 27.05M	89'2" 27.18M	25'1" 7.65M	35'1" 10.69M	40'11" 12.47M	13'5" 4.09M	13'3" 4.04M	36'6" 11.13M	3'6" 1.07M	20'5" 6.22M	12'3" 3.73M	64'10" 19.76M

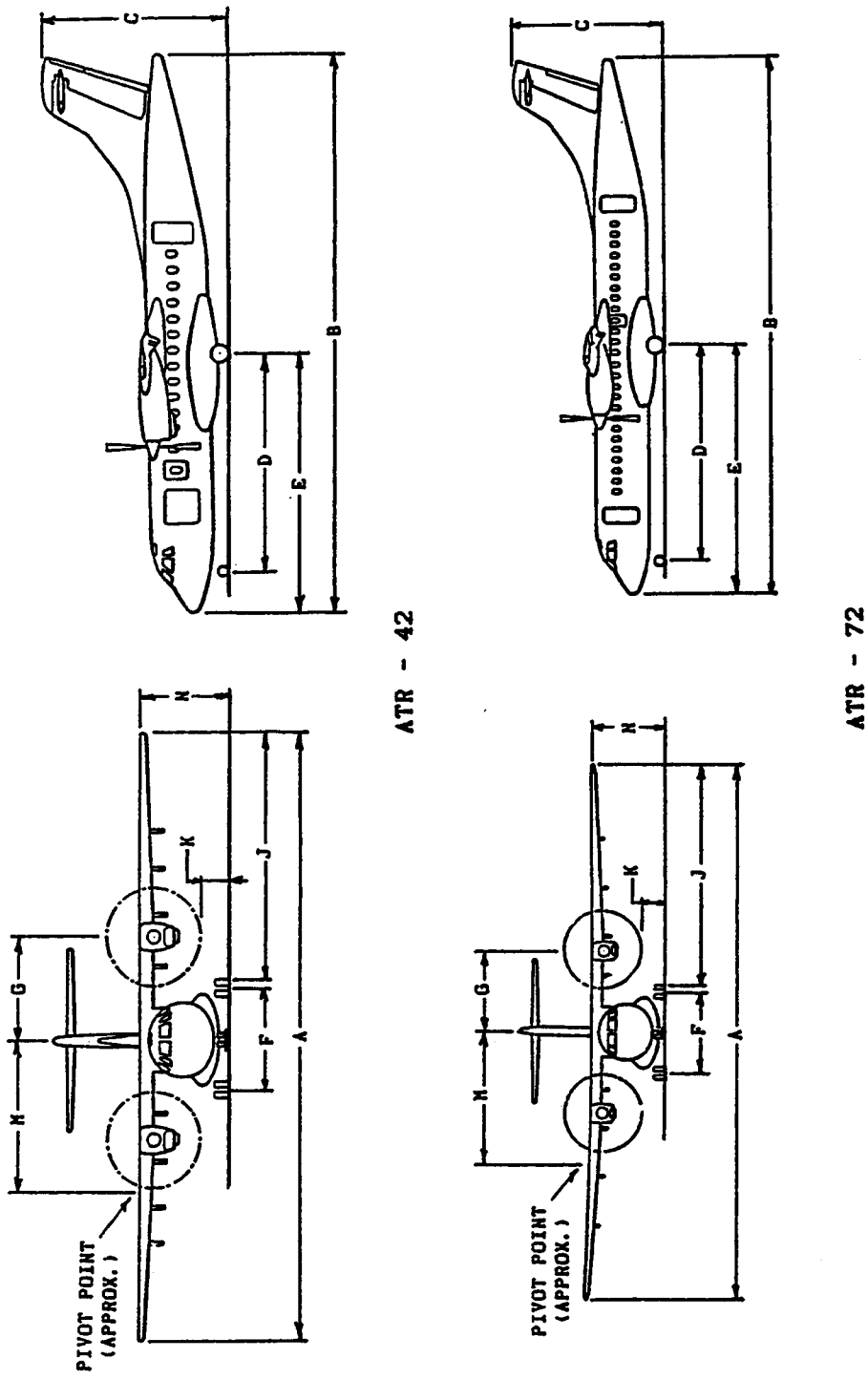

Figure A12-12. Avions de Transport Regional ATR-42 & -72

MODEL	MAXIMUM TAKEOFF WEIGHT	MAXIMUM LANDING WEIGHT	A	B	C	D	E	F	G	J	K	M	N	TURN RADIUS
10	18,740 LB 8 500 KG	17,640 LB 8 001 KG	42'11" 13.08M	45'6" 13.87M	15'1" 4.60M									
20	28,660 LB 13 000 KG	27,320 LB 12 392 KG	53'6" 16.31M	56'3" 17.14M	17'5" 5.31M	18'10" 5.74M		12'2" 3.71M	5'6" 1.68M	18'11" 5.77M	5'8" 1.72M	15'3" 4.65M	4'10" 1.47M	42'0" 12.80M
50	37,480 LB 17 001 KG	35,715 LB 16 200 KG	61'11" 18.87M	60'9" 18.52M	22'11" 6.98M	23'9" 7.24M		13'1" 3.99M						
200	30,650 LB 13 903 KG	28,800 LB 13 063 KG	53'6" 16.31M	56'3" 17.14M	17'5" 5.31M									
900	45,500 LB 20 638 KG	42,000 LB 19 051 KG	63'5" 19.33M	66'3" 20.19M	24'10" 7.57M									

NOTE: MODEL 50 HAS OPTIONAL MAXIMUM TAKEOFF WEIGHT OF 40,780 LB (18 497 KG).

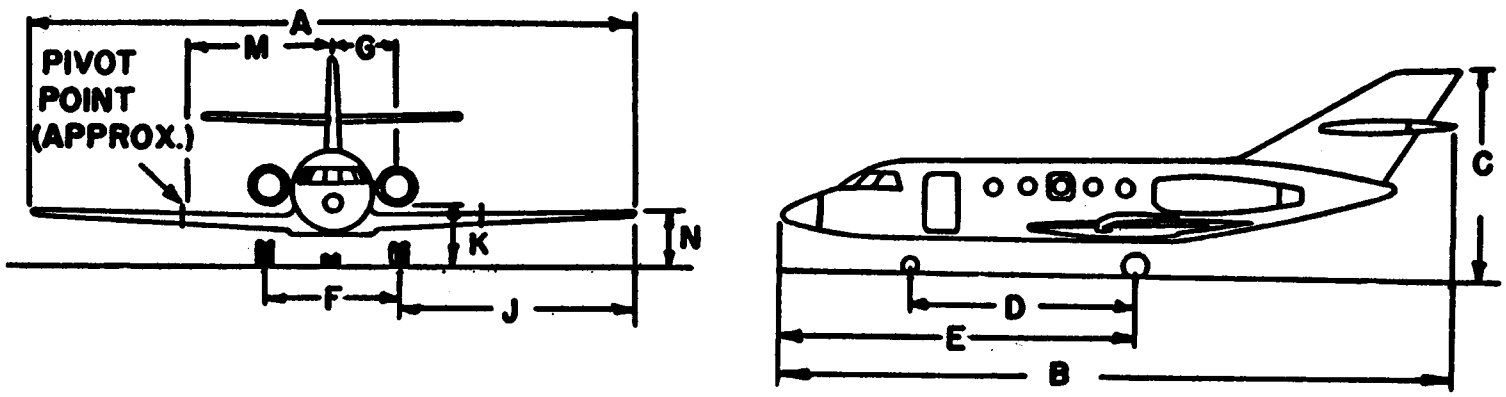

Figure A12-13. Avions Marcel Dassault Mystère 20 (Fan Jet Facon)

MODEL	MAXIMUM TAKEOFF WEIGHT	MAXIMUM LANDING WEIGHT	A	B	C	D	E	F	G	J	K	M	N	TURN RADIUS
200	79,000 LB 35 834 KG	69,000 LB 31 298 LB	88'6" 26.97M	93'6" 28.48M	24'6" 7.46M	33'1" 10.15M	48'5" 14.49M	14'3" 4.34M	8'2" 2.49M	35'9" 10.90M	6'7" 2.01M	7'8" 2.34M	7'4" 2.24M	52'6" 15.95M
400														
500	104,500 LB 47 400 KG	86,000 LB 39 009 KG	93'6" 28.49M	107'0" 32.61M	24'6" 7.46M	41'5" 12.35M	56'9" 17.30M	14'3" 4.34M	8'2" 2.49M	42'8" 13.00M	6'7" 2.01M	7'8" 2.34M	7'4" 2.24M	

SRS 400 HAS MAXIMUM (TAKEOFF) WEIGHT OF 87,000 LB (39 463 KG).
(LANDING) 78,000 LB (35 380 KG).

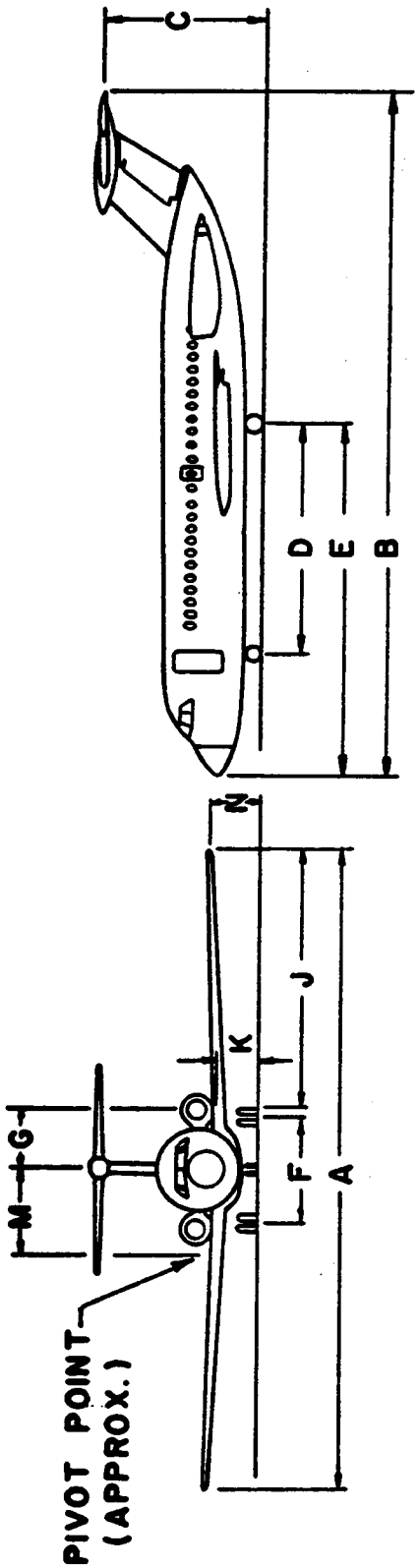

Figure A12-14. BAe 1-11

MODEL	MAXIMUM TAKEOFF WEIGHT	MAXIMUM LANDING WEIGHT	A	B	C	D	E	F	G	J	K	M	N	TURN RADIUS
CONCORDE	408,000 LB 185 066 KG	245,000 LB 111 130 KG	83'10" 25.55M	205'5" 62.61M	37'5" 11.40M	59'8" 18.19M	122'10" 37.44M	25'4" 7.72M	18'1" 5.51M	27'3" 8.31M	6'1" 1.85M	32'5" 9.88M	8'6" 2.59M	127'0" 38.71M

*TIP OF PROBE, NOSE FULLY LOWERED 8'6" (2.59M).

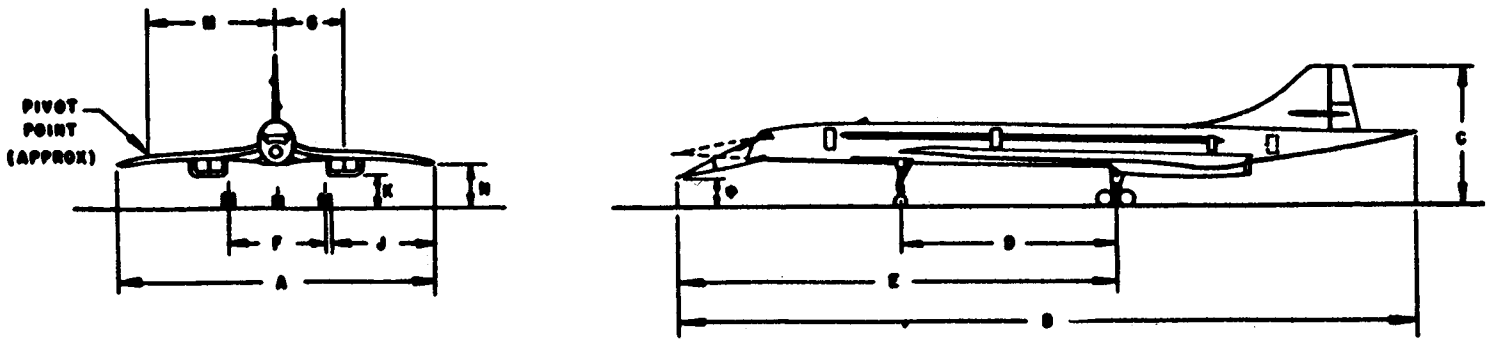

Figure A12-15. B.A.C./SNIAS Concorde

MODEL	MAXIMUM TAKEOFF WEIGHT	MAXIMUM LANDING WEIGHT	A	B	C	D	E	F	G	J	K	M	N	TURN RADIUS
VC-10 -1100	312,000 LB 141 521 KG	216,000 LB 97 976 KG	146'2" 44.60M	158'9" 48.39M	39'6" 12.04M	65'10" 20.06M		21'5" 6.53M						
VC-10 -1150	335,100 LB 151 999 KG	237,000 LB 107 501 KG	146'2" 44.60M	171'8" 52.32M	39'6" 12.04M	72'1" 21.97M		21'5" 6.53M						

SRS 1150 KNOWN AS VC-10 SUPER.

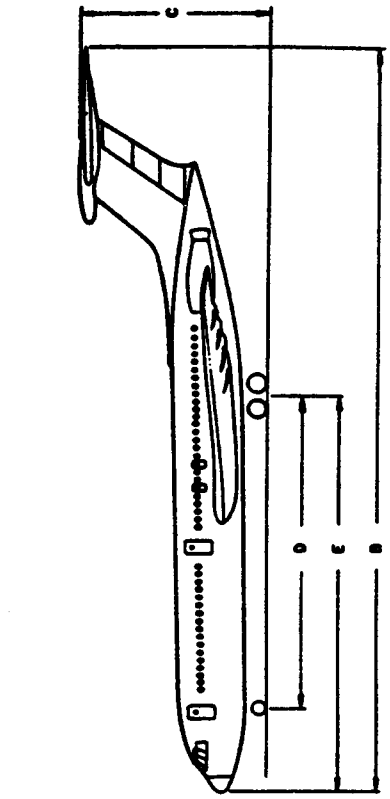

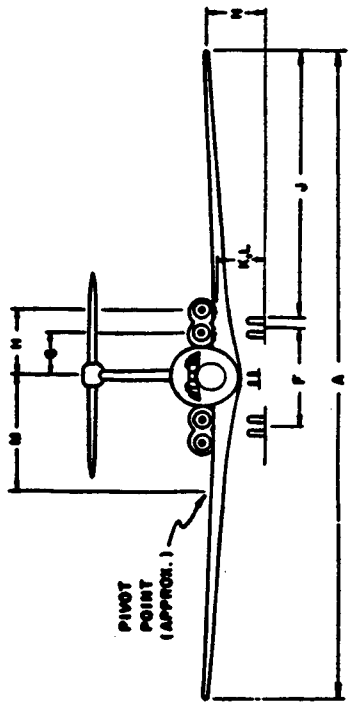

Figure A12-16. B.A.C./Vickers VC-10

MODEL	MAXIMUM TAKEOFF WEIGHT	MAXIMUM LANDING WEIGHT	A	B	C	D	E	F	G	H	J	K	L	M	N	TURN RADIUS
745	64,500 LB 29 257 KG	57,500 LB 26 082 KG	93'9" 28.57M	81'10" 24.94M	26'9" 8.15M	25'3" 7.70M	35'8" 10.87M	23'10" 7.32M	12'9" 3.88M		33'9" 10.29M	1'1" 0.33M		20'10" 6.56M	8'7" 2.62M	67'8" 20.62M
810	72,500 LB 32 885 KG	62,000 LB 28 123 KG	94'0" 28.65M	85'8" 25.83M	26'10" 8.18M	29'1" 8.86M	39'6" 12.04M	23'10" 7.32M	12'9" 3.88M		33'9" 10.29M	1'1" 0.33M		24'5" 7.39M	8'7" 2.62M	71'3" 21.72M

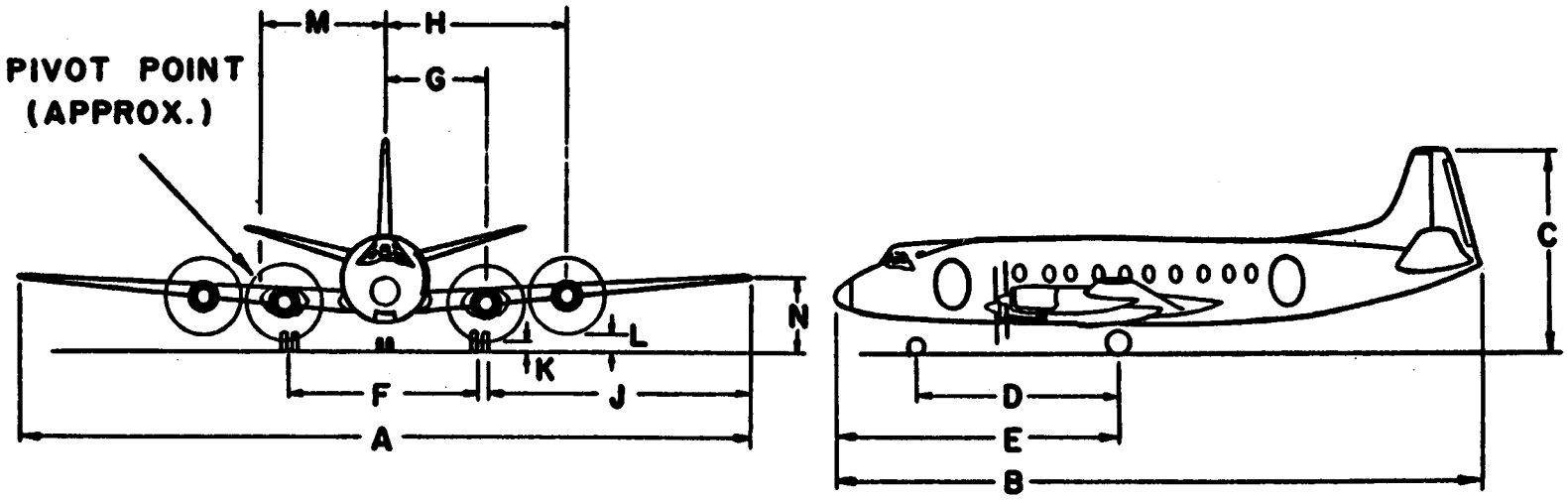

Figure A12-17. B.A.C./Vickers Viscount

MODEL	MAXIMUM TAKEOFF WEIGHT	MAXIMUM LANDING WEIGHT	A	B	C	D	E	F	G	J	K	M	N	TURN RADIUS
1	14,000 LB 6 350 KG	13,300 LB 6 033 KG	54'5" 16.59M	46'1" 14.05M	12'11" 3.94M	22'6" 6.86M	28'8" 8.74M	16'10" 5.13M	4'10' 1.47M	18.1" 5.51M	2'11" 0.89M		4'6" 1.37M	

NOTE: FORWARD WING SPAN:
AFT POSITION 20'11" (6.38M).
FORWARD POSITION 24'11" (7.59M).

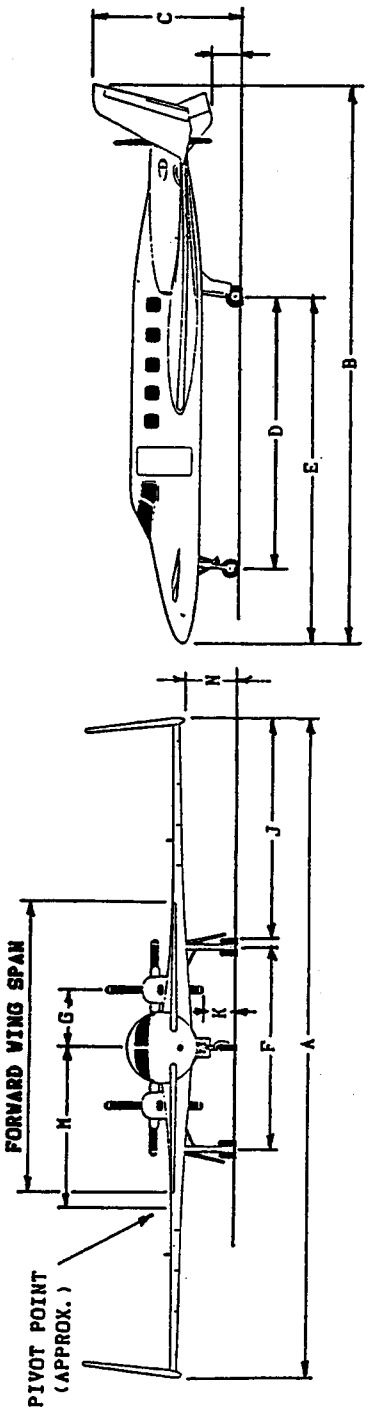

Figure A12-18. Beech Starship

MODEL	MAXIMUM TAKEOFF WEIGHT	MAXIMUM LANDING WEIGHT	A	B	C	D	F	NUMBER SEATS	TURN RADIUS
C99	11,300 LB 5 126 KG	11,300 LB 5 126 KG	45'11" 14.00M	44'7" 13.59M	14'5" 4.39M	18'0" 5.49M	13'0" 3.97M	17	40'0" 12.19M
1900	16,600 LB 7 530 KG	16,100 LB 7 303 KG	54'6" 16.61M	57'10" 17.63M	14'11" 4.55M	23'10" 7.26M	17'2" 5.23M	19	39'4" 11.99M

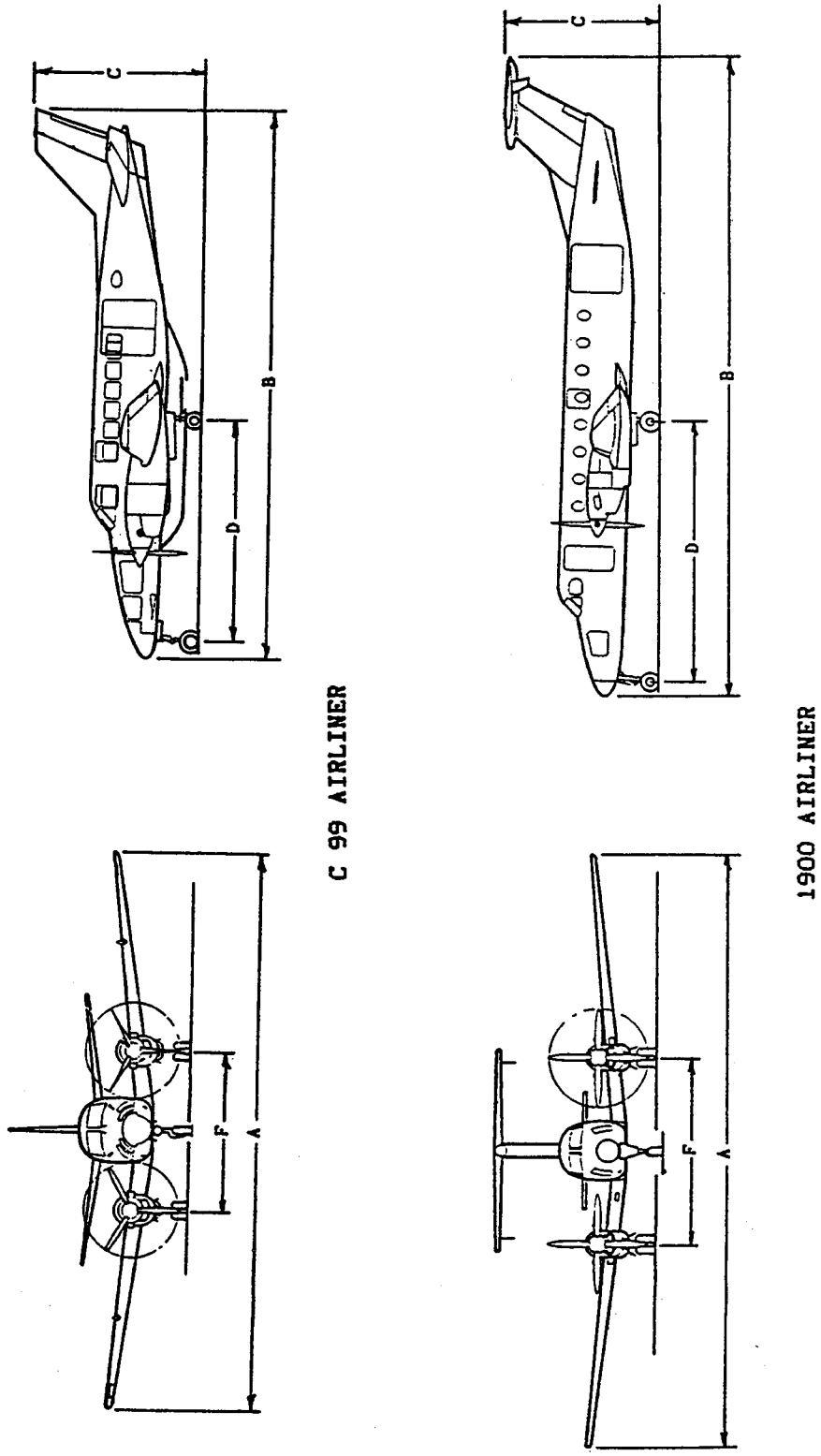

Figure A12-19. Beechcraft Airliner

MODEL	MAXIMUM TAKEOFF WEIGHT	MAXIMUM LANDING WEIGHT	A	B	C	D	F	NUMBER SEATS	TURN RADIUS
A-90	9,650 LB 4 391 KG	9,500 LB 4 323 KG	50'3" 15.32M	36'6" 11.14M	14'8" 4.47M	12'4" 3.76M	12'9" 3.89M	8	
A-100	10,600 LB 4 823 KG	10 500 LB 4 778 KG	45'11" 14.00M	39'11" 12.18M	15'4" 4.67M	14'11" 4.55M	13'0" 3.97M	10	

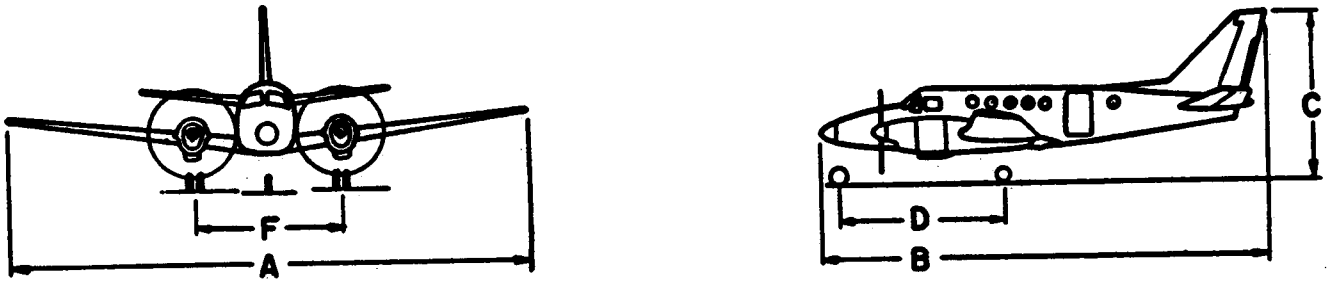

Figure A12-20. Beechcraft King Air

MODEL	MAXIMUM TAKEOFF WEIGHT	MAXIMUM LANDING WEIGHT	A	B	C	D	F	NUMBER SEATS	TURN RADIUS
18	9,900 LB 4 500 KG	9,500 LB 4 323 KG	49'8" 15.14M	35'3" 10.74M	9'4" 2.87M	23'9" 7.24M	12'11" 3.94M	10	30'3" 9.53M
TURBO 18	10,280 LB 4 673 KG	9,775 LB 4 444 KG	46'0" 14.03M	37'5" 11.40M	9'7" 2.95M			12	
VOLPAR TURBOLINER	11,500 LB 5 324 KG	11,000 LB 5 000 KG	46'0" 14.03M	44'3" 13.49M	9'7" 2.95M			15	

NOTES: MODEL 18 HAS RECIPROCATING ENGINES.
TURBOPROP CONVERSIONS HAVE TRICYCLE LANDING GEAR.

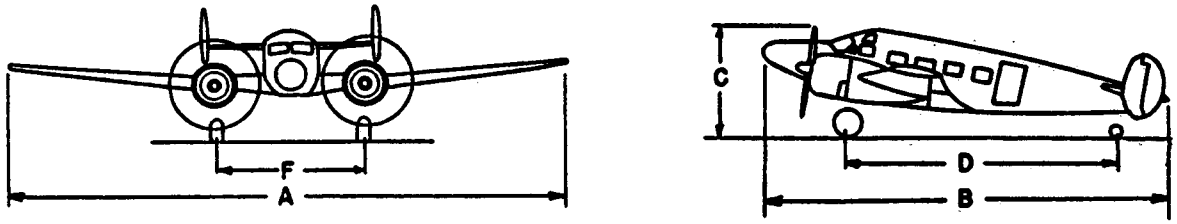

Figure A12-21. Beechcraft Model 18 and Conversions

MODEL	MAXIMUM TAKEOFF WEIGHT	MAXIMUM LANDING WEIGHT	A	B	C	D	F	NUMBER SEATS	TURN RADIUS
A-65	7,700 LB 3 493 KG	7,350 LB 3 334 KG	45'11" 14.00M	35'6" 10.83M	14'3" 4.34M	12'4" 3.76M	12'9" 3.89M	6	29'4" 8.94M
B-80	8,800 LB 3 992 KG	8,800 LB 3 992 KG	50'3" 15.31M	35'6" 10.83M	14'3" 4.34M	12'4" 3.76M	12'9" 3.89M	8	29'4" 8.94M

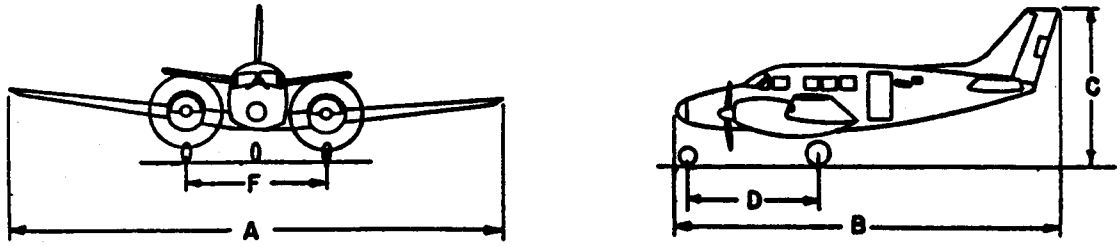

Figure A12-22. Beechcraft Queen Air

MODEL	MAXIMUM TAKEOFF WEIGHT	MAXIMUM LANDING WEIGHT	A	B	C	D	E	F	G	H	J	K	L	M	N	TURN RADIUS
STRATO-	488,000 LB	450,000 LB	185'0"	156'7"	40'10"	49'9"	89'10"	11'4"	32'2"	60'0"	86'2"	6'4"	4'8"	39'0"	5'6"	132'0"
FORTRESS	221 353 KG	204 117 KG	56.39M	47.73M	12.45M	15.16M	17.16M	3.45M	9.80M	18.29M	26.26M	1.93M	1.42M	11.89M	1.68M	40.23M

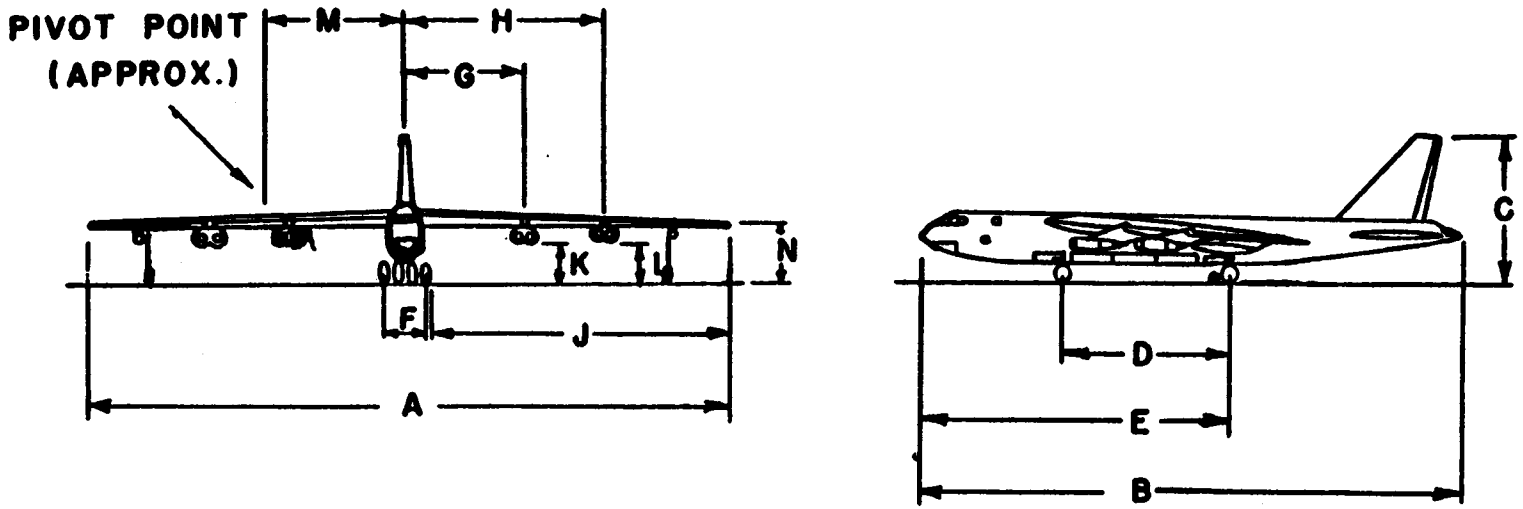

Figure A12-23. Boeing B-52 Stratofortress

MODEL	MAXIMUM TAKEOFF WEIGHT	MAXIMUM LANDING WEIGHT	A	B	C	D	E	F	G	H	J	K	L	M	N	TURN RADIUS
STRATO-CRUISER	145,800 LB 66 134 KG	121,700 LB 55 202 KG	141'3" 43.05M	110'4" 33.63M	38'3" 11.65M	39'2" 11.93M	42'10" 13.06M	28'6" 8.70M	14'1" 4.29M	31'2" 9.50M	55'4" 16.87M	1'5" 0.43M	2'7" 0.79M	14'3" 4.34M		84'10" 25.86M

NOTE: OPTIONAL TAKEOFF WEIGHTS: 153,000 LB (69 400 KG) AND 175,000 LB (79 379 KG).

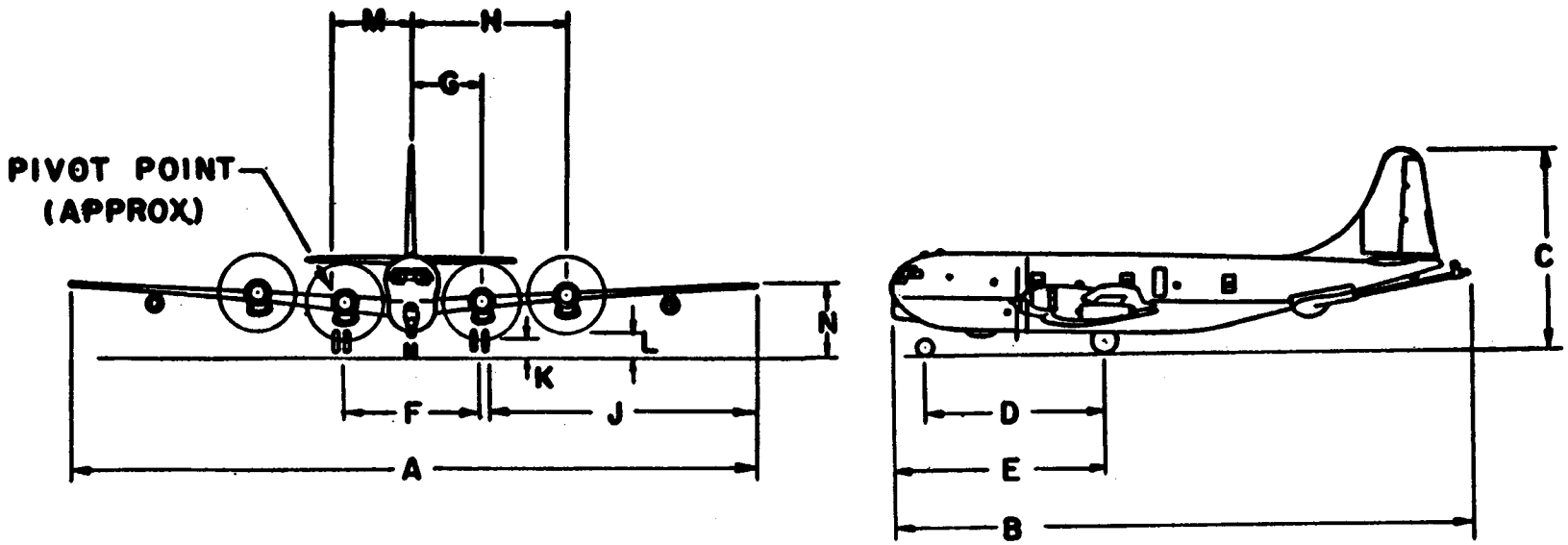

Figure A12-24. Boeing KC-97L

MODEL	MAXIMUM TAKEOFF WEIGHT	MAXIMUM LANDING WEIGHT	A	B	C	D	E	F	G	H	J	K	L	M	N	TURN RADIUS
	301,600 LB 136 803 KG	185,000 LB 83 915 KG	130'10" 39.88M	136'3" 41.53M	38'5" 11.71M	45'8" 13.92M	63'1" 19.23M	22'1" 6.73M	27'2" 8.28M	46'1" 14.25M	51'11" 15.98M	2'4" 0.71M	4'8" 1.42M	36'7" 11.15M	12'4" 3.76M	107'0" 32.60M

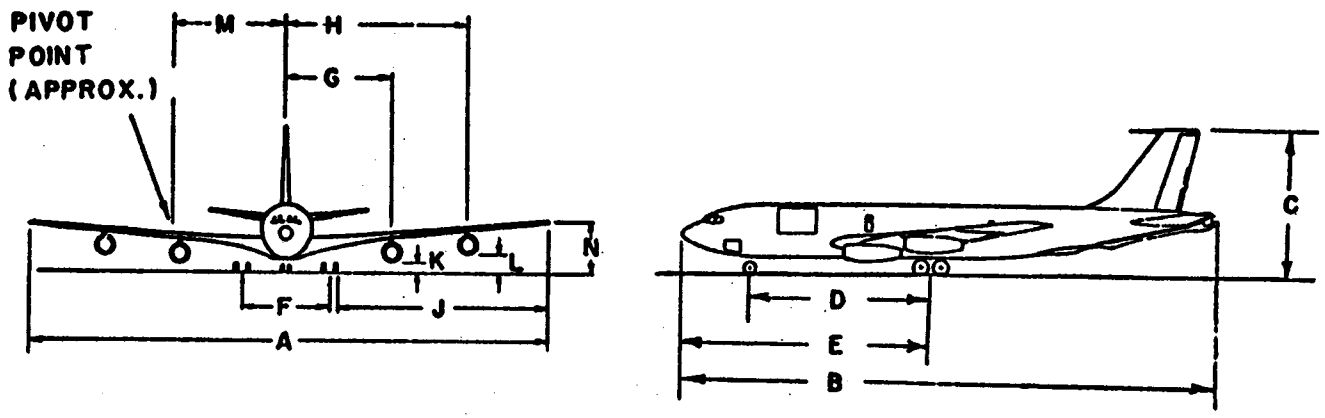

Figure A12-25. Boeing KC-135A

MODEL	MAXIMUM TAKEOFF WEIGHT	MAXIMUM LANDING WEIGHT	A	B	C	D	E	F	G	H	J	K	L	M	N	TURN RADIUS
720	229,300 LB 104 009 KG	175,000 LB 79 379 KG	130'10" 39.88M	136'2" 41.50M	41'5" 12.62M	50'8" 15.44M	68'1" 20.75M	21'11" 6.67M	27'2" 8.28M	46'1" 14.05M	52'6" 16.00M	2'7" 0.79M	4'3" 1.30M	32'9" 9.98M	10'10" 3.30M	102'5" 31.22M
720B	234,300 LB 106 277 KG	175,000 LB 79 379 KG	130'10" 39.88M	136'9" 41.68M	41'2" 12.55M	50'8" 15.44M	68'1" 20.75M	21'11" 6.67M	27'2" 8.28M	46'1" 14.05M	52'6" 16.00M	2'1" 0.64M	3'9" 1.14M	32'9" 9.98M	10'10" 3.30M	102'5" 31.22M
707- 120B	257,340 LB 116 727 KG	190,000 LB 86 183 KG	130'10" 39.88M	145'1" 44.22M	41'8" 12.70M	52'4" 15.95M	69'9" 21.25M	22'1" 6.73M	27'2" 8.28M	46'1" 14.05M	52'3" 15.93M	2'4" 0.71M	4'2" 1.27M	36'7" 11.15M	11'7" 3.53M	107'0" 32.61M
707- 320/420	312,000 LB 141 521 LB	207,000 LB 93 894 KG	142'5" 43.41M	152'11" 46.61M	42'2" 12.85M	59'0" 17.98M	76'5" 23.28M	22'1" 6.73M	32'6" 9.91M	51'5" 15.67M	58'1" 17.70M	2'9" 0.84M	4'7" 1.40M	38'4" 11.68M	12'1" 3.68M	114'0" 34.75M
707- 320B,C	327,000 LB 148 325 KG	207,000 LB 93 894 KG	145'9" 44.42M	152'11" 46.61M	42'1" 12.83M	59'0" 17.98M	76'5" 23.28M	22'1" 6.73M	32'6" 9.91M	51'5" 15.67M	59'9" 18.21M	2'9" 0.84M	4'7" 1.40M	38'4" 11.68M	12'1" 3.68M	116'0" 35.36M

NOTE: OPTIONAL TAKEOFF AND LANDING WEIGHTS:

707 333,600 LB (151 318 KG) MAXIMUM TAKEOFF WEIGHT.
320B 215,000 LB (97 522 KG) MAXIMUM LANDING WEIGHT.

707 333,600 LB (151,318 KG) MAXIMUM TAKEOFF WEIGHT.
320C 247,000 LB (112 037 KG) MAXIMUM LANDING WEIGHT.

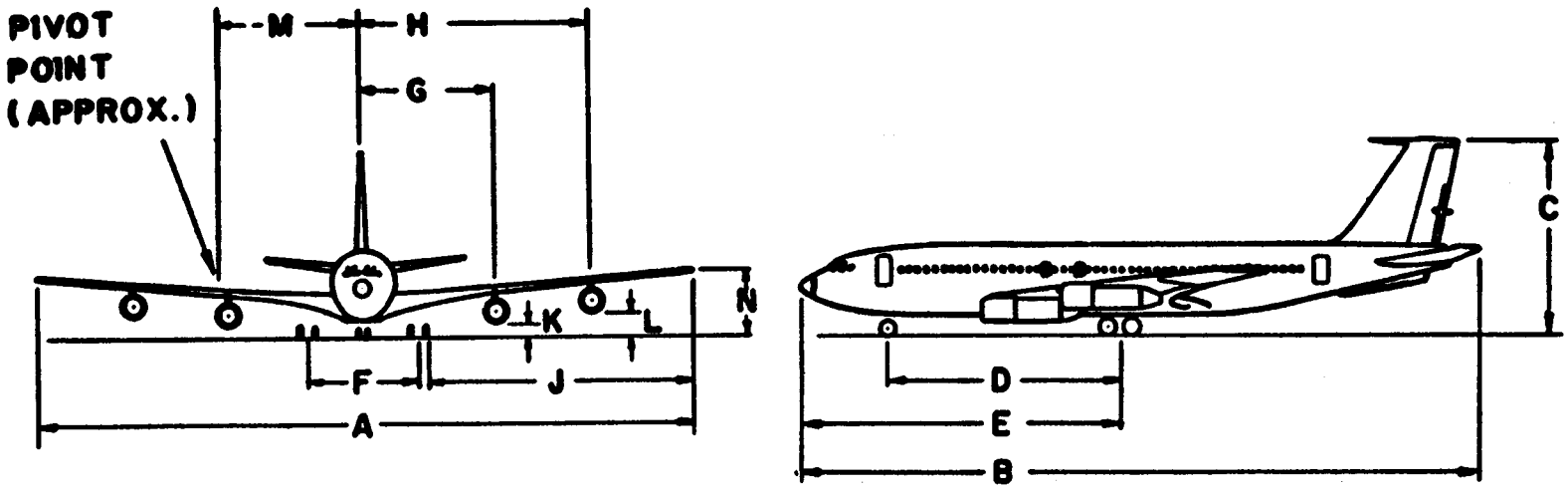

Figure A12-26. Boeing 707-720

MODEL	MAXIMUM TAKEOFF WEIGHT	MAXIMUM LANDING WEIGHT	A	B	C	D	E	F	G	J	K	M	N	P	TURN RADIUS
100	160,000 LB 72 575 KG	137,500 LB 62 369 KG	108'0" 32.92M	133'2" 40.59M	34'3" 10.44M	53'3" 16.23M	68'4" 20.83M	18'9" 5.72M	9'3" 2.82M	42'6" 12.95M	10'4" 3.15M	14'4" 4.37M	5'8" 1.72M	12'0" 3.66M	72'0" 21.95M
100-C	160,000 LB 72 575 KG	137,500 LB 62 369 KG	108'0" 32.92M	133'2" 40.59M	34'3" 10.44M	53'3" 16.23M	68'4" 20.83M	18'9" 5.72M	9'3" 2.82M	42'6" 12.95M	10'4" 3.15M	14'4" 4.37M	5'8" 1.72M	12'0" 3.66M	72'0" 21.95M
200	172,000 LB 78 018 KG	150,000 LB 68 039 KG	108'0" 32.92M	153'2" 46.68M	34'11" 10.65M	63'3" 19.28M	78'4" 23.88M	18'9" 5.72M	9'3" 2.82M	42'4" 12.90M	10'4" 3.15M	16'11" 5.16M	4'9" 1.44M	12'0" 3.66M	82'0" 24.99M

NOTE: OPTIONAL TAKEOFF AND LANDING WEIGHTS:

100	160,000 LB (72 575 KG)	169,000 LB (76 657 KG)		MAXIMUM TAKEOFF WEIGHT.
	142,500 LB (64 637 KG)	142,500 LB (64 637 KG)		MAXIMUM LANDING WEIGHT.
100C	160,000 LB (72 575 KG)	169,000 LB (76 657 KG)		MAXIMUM TAKEOFF WEIGHT.
	140,000 LB (63 503 KG)	142,500 LB (64 637 KG)		MAXIMUM LANDING WEIGHT.
200	184,800 LB (83 824 KG)	190,500 LB (86 409 KG)	197,000 LB (89 358 KG)	209,500 LB (95 028 KG) MAXIMUM TAKEOFF WEIGHT.
	154,500 LB (70 080 KG)	154,500 LB (70 080 KG)	154,500 LB (70 080 KG)	161,000 LB (73 028 KG) MAXIMUM LANDING WEIGHT.

Figure A12-27. Boeing 727

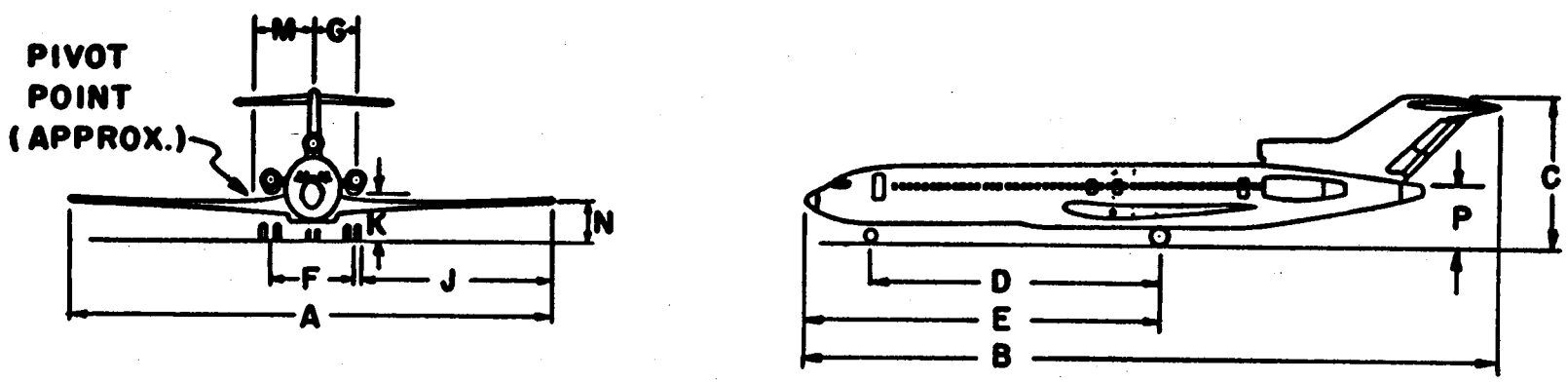

MODEL	MAXIMUM TAKEOFF WEIGHT	MAXIMUM LANDING WEIGHT	A	B	C	D	E	F	G	J	K	M	N	TURN RADIUS
100	97,000 LB 43 998 KG	89,700 LB 40 687 KG	93'0" 28.35M	94'0" 28.65M	37'2" 11.33M	34'4" 10.46M	47'4" 14.42M	17'2" 5.23M	15'10" 4.83M	36'1" 11.00M	1'8" 0.51M	9'2" 2.80M	10'0" 3.05M	57'2" 17.42M
200	100,000 LB 45 359 KG	95,000 LB 43 091 KG	93'0" 28.35M	100'2" 30.53M	37'3" 11.35M	37'4" 11.38M	50'4" 15.34M	17'2" 5.23M	15'10" 4.83M	36'1" 11.00M	1'8" 0.51M	10'0" 3.05M	10'0" 3.05M	58'2" 17.73M
300	124,500 LB 56 472 KG	114,000 LB 51 710 KG	94'9" 28.88M	109'7" 33.40M	36'7" 11.15M	40'10" 12.45M	54'0" 16.46M	17'2" 5.23M	15'10" 4.83M	36'11" 11.25M	1'6" 0.46M	11'0" 3.35M	10'0" 3.05M	64'0" 19.51M
400	138,500 LB 68 823 KG	121,000 LB 54 885 KG	94'9" 28.88M	119'7" 36.45M	36'7" 11.15M	46'10" 14.27M	60'0" 18.29M	17'2" 5.23M	15'10" 4.83M	36'11" 11.25M	1'6" 0.46M	12'6" 3.81M	10'0" 3.05M	68'4" 20.83M
500	115,500 LB 52 390 KG	110,000 LB 49 895 KG	94'9" 28.88M	101'9" 30.01M	36'7" 11.15M	36'4" 11.07M	49'6" 15.09M	17'2" 5.23M	15'10" 4.83M	36'11" 11.25M	1'6" 0.46M	9'8" 2.95M	10'0" 3.05M	60'7" 18.47M

NOTE: OPTIONAL TAKEOFF AND LANDING WEIGHTS.

100	103,000 LB (46 720 KG) 98,000 LB (44 452 KG)	110,000 LB (49 895 KG) 99,000 LB (44 906 KG)			MAXIMUM TAKEOFF WEIGHT. MAXIMUM LANDING WEIGHT.
200	103,000 LB (46 720 KG) 95,000 LB (43 091 KG)	109,000 LB (49 442 KG) 98,000 LB (44 452 KG)	110,000 LB (49 895 KG) 99,000 LB (44 906 KG)	115,500 LB (52 390 KG) 103,000 LB (46 720 KG)	MAXIMUM TAKEOFF WEIGHT. MAXIMUM LANDING WEIGHT.
200 CONV	109,000 LB (49 442 KG) 98,000 LB (44 452 KG)	110,000 LB (49 895 KG) 99,000 LB (44 906 KG)	110,000 LB (49 895 KG) 103,000 LB (46 720 KG)	115,500 LB (52 390 KG) 103,000 LB (46 720 KG)	115,500 LB (52 390 KG) MAXIMUM TAKEOFF WEIGHT. 103,000 LB (46 720 KG) MAXIMUM LANDING WEIGHT.
200 ADV C,QC	115,500 LB (52 390 KG) 103,000 LB (46 720 KG)	117,000 LB (53 070 KG) 105,000 LB (47 627 KG)	119,500 LB (54 204 KG) 105,000 LB (47 627 KG)	124,500 LB (56 472 KG) 107,000 LB (48 534 KG)	128,100 LB (58 105 KG) MAXIMUM TAKEOFF WEIGHT. 107,000 LB (48 534 KG) MAXIMUM LANDING WEIGHT.
300	130,000 LB (58 967 KG) 114,000 LB (51 710 KG)	135,000 LB (61 235 KG) 114,000 LB (51 710 KG)	137,000 LB (62 142 KG) 114,000 LB (51 710 KG)	138,500 LB (62 823 KG) 115,800 LB (52 526 KG)	MAXIMUM TAKEOFF WEIGHT. MAXIMUM LANDING WEIGHT.
400	142,500 LB (64 637 KG) 121,000 LB (54 885 KG)	150,000 LB (68 039 KG) 124,000 LB (56 245 KG)	142,500 LB (64 637 KG) 124,000 LB (56 245 KG)	150,000 LB (68 039 KG) 124,000 LB (56 245 KG)	MAXIMUM TAKEOFF WEIGHT. MAXIMUM LANDING WEIGHT.
500	124,500 LB (56 472 KG) 110,000 LB (49 895 KG)	133,500 LB (60 555 KG) 110,000 LB (49 895 KG)	124,500 LB (56 472 KG) 110,000 LB (49 895 KG)	133,500 LB (60 555 KG) 110,000 LB (49 895 KG)	MAXIMUM TAKEOFF WEIGHT. MAXIMUM LANDING WEIGHT.

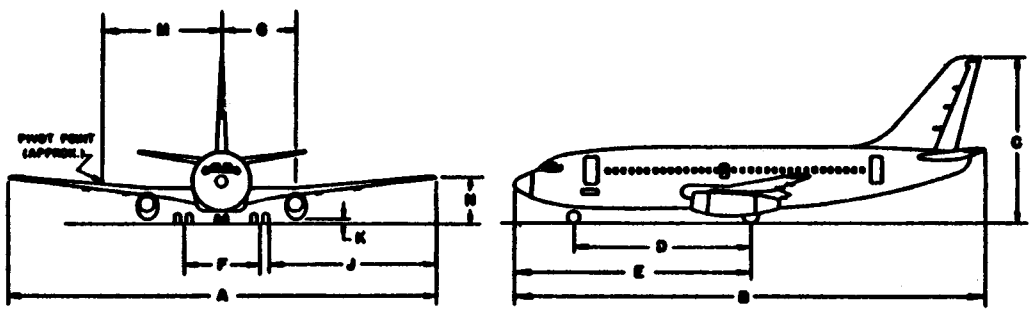

Figure A12-28. Boeing 737

MODEL	MAXIMUM TAKEOFF WEIGHT	MAXIMUM LANDING WEIGHT	A	B	C	D	E	F	G	H	J	K	L	M	N	TURN RADIUS
100B 200B, C 300PASS	SEE NOTE	SEE NOTE	195'8" 59.64M	231'10" 70.66M	64'3" 19.58M	84'0" 25.60M	109'5" 33.35M	36'1" 11.00M	39'9" 12.12M	69'10" 21.29M	77'3" 23.55M	3'9" 1.14M	4'11" 1.50M	40'0" 12.19M	17'7" 5.36M	151'0" 46.02M
200C 200F CARGO	SEE NOTE	SEE NOTE	195'8" 59.64M	231'10" 70.66M	64'8" 19.71M	84'0" 25.60M	109'5" 33.35M	36'1" 11.00M	39'9" 12.12M	69'10" 21.29M	77'3" 23.55M	3'9" 1.14M	6'0" 1.83M	40'0" 12.19M	17'7" 5.36M	151'0" 46.02M
SP	SEE NOTE	SEE NOTE	195'8" 59.64M	184'9" 56.31M	65'10" 20.07M	67'4" 20.52M	92'9" 28.27M	36'1" 11.00M	39'2" 11.94M	69'6" 21.18M	77'4" 23.57M	3'7" 1.09M	5'7" 1.70M	40'0" 12.19M	17'2" 5.23M	151'0" 46.02M
400	SEE NOTE	SEE NOTE	213'0" 64.92M	231'10" 70.66M	64'3" 19.58M	84'0" 25.60M	109'5" 33.35M	36'1" 11.00M	39'2" 11.94M	69'6" 21.18M	85'10" 26.16M	3'9" 1.14M	6'0" 1.83M	40'0" 12.19M	16'9" 5.11M	159'0" 48.46M

NOTE: OPTIONAL TAKEOFF AND LANDING WEIGHTS. 564-585 DENOTES STANDARD AND OPTIONAL WEIGHT IN THOUSANDS OF POUNDS.

100/100B	710,000 LB	750,000 LB	*735,000 LB	#571,000 LB	#600,000 LB	MAXIMUM TAKEOFF WEIGHT.
*100SF #100B SR	564,000 LB	585,000 LB	*564,000 LB	#564,000 LB	#564,000 LB	MAXIMUM LANDING WEIGHT.
200B	775,000 LB	785,000 LB	800,000 LB	823,000 LB	833,000 LB	MAXIMUM TAKEOFF WEIGHT.
	564,000 LB	564,000 LB	585,000 LB	630,000 LB	630,000 LB	MAXIMUM LANDING WEIGHT.
200B COMBI	775,000 LB	785,000 LB	800,000 LB	820,000 LB	833,000 LB	MAXIMUM TAKEOFF WEIGHT.
	585-630 LB	630,000 LB	630,000 LB	630,000 LB	630,000 LB	MAXIMUM LANDING WEIGHT.
200C P	775,000 LB	800,000 LB	*785,000 LB	*820,000 LB	*833,000 LB	MAXIMUM TAKEOFF WEIGHT.
*200C C	630,000 LB	630,000 LB	*630,000 LB	*630,000 LB	*630,000 LB	MAXIMUM LANDING WEIGHT.
200F CARGO	775,000 LB	785,000 LB	800,000 LB	823,000 LB	833,000 LB	MAXIMUM TAKEOFF WEIGHT.
	630,000 LB	630,000 LB	630,000 LB	630,000 LB	630,000 LB	MAXIMUM LANDING WEIGHT.
300	710,000 LB	735,000 LB	750,000 LB	*520,000 LB	*600,000 LB	MAXIMUM TAKEOFF WEIGHT.
*300 SR	564,000 LB	564,000 LB	564,000 LB	*515,000 LB	*535,000 LB	MAXIMUM LANDING WEIGHT.
300/200B	775,000 LB	785,000 LB	800,000 LB	820,000 LB	833,000 LB	MAXIMUM TAKEOFF WEIGHT.
	574-630 LB	574-630 LB	574-630 LB	574-630 LB	574-640 LB	MAXIMUM LANDING WEIGHT.
300 COMBI	775,000 LB	785,000 LB	800,000 LB	820,000 LB	833,000 LB	MAXIMUM TAKEOFF WEIGHT.
	605-630 LB	605-630 LB	605-630 LB	605-630 LB	605-630 LB	MAXIMUM LANDING WEIGHT.
SP	630,000 LB	660,000 LB	670,000 LB	690,000 LB	696,000 LB	MAXIMUM TAKEOFF WEIGHT.
	450-465 LB	450-465 LB	450-465 LB	450-465 LB	450-465 LB	MAXIMUM LANDING WEIGHT.
400	800,000 LB	800,000 LB	833,000 LB	833,000 LB	850-870 LB	MAXIMUM TAKEOFF WEIGHT.
	574-585 LB	630,000 LB	574-585 LB	630,000 LB	630,000 LB	MAXIMUM LANDING WEIGHT.

METRIC CONVERSION TABLE

POUNDS	KILOGRAMS	POUNDS	KILOGRAMS
450,000	204 117	690,000	312 979
465,000	210 920	696,000	315 700
515,000	233 600	710,000	322 051
520,000	235 868	735,000	333 390
535,000	242 672	750,000	340 194
564,000	255 826	775,000	351 534
571,000	250 001	785,000	356 070
574,000	260 362	800,000	362 874
585,000	265 352	820,000	371 946
600,000	272 155	823,000	373 307
605,000	274 423	833,000	377 842
630,000	285 763	850,000	385 554
660,000	299 371	870,000	394 625
670,000	303 907		

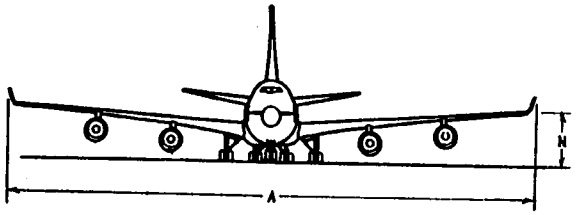

747-400

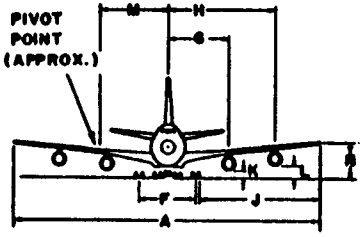

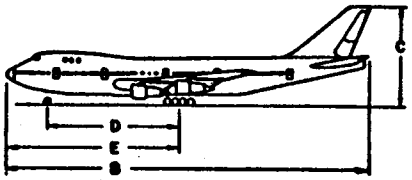

Figure A12-29. Boeing 747

MODEL	MAXIMUM TAKEOFF WEIGHT	MAXIMUM LANDING WEIGHT	A	B	C	D	E	F	G	J	K	M	N	TURN RADIUS
757-200	SEE	SEE	124'10"	155'3"	45'1"	60'0"	79'4"	24'0"	21'3"	48'2"	2'5"	35'0"	15'4"	98'0"
-200PF	NOTE	NOTE	38.05M	47.32M	13.74M	18.29M	24.18M	7.32M	6.48M	14.68M	0.74M	10.67M	4.67M	29.87M

NOTE: OPTIONAL TAKEOFF AND LANDING WEIGHTS.

757-200	220,000 LB (99 790 KG)	230,000 LB (104 326 KG)	240,000 LB (108 862 KG)	250,000 LB (113 398 KG)	255,000 LB (115 666 KG)*	MAXIMUM TAKEOFF WEIGHT.
RB211 -535C -535E4 -535E4B PW2037 PW2040	198,000 LB (89 811 KG)	198,000 LB (89 811 KG)	198,000 LB (89 811 KG)	198,000 LB (89 811 KG)	210,000 LB (95 254 KG)	MAXIMUM LANDING WEIGHT.

757	250,000 LB (113 389 KG)	255,000 LB (115 666 KG)*	MAXIMUM TAKEOFF WEIGHT.
-200PF	210,000 LB (95 254 KG)	210,000 LB (95 254 KG)	MAXIMUM LANDING WEIGHT.

* 235,500 LB (115 893 KG) FOR AIRPORT ALTITUDES BELOW 1,500 FT.

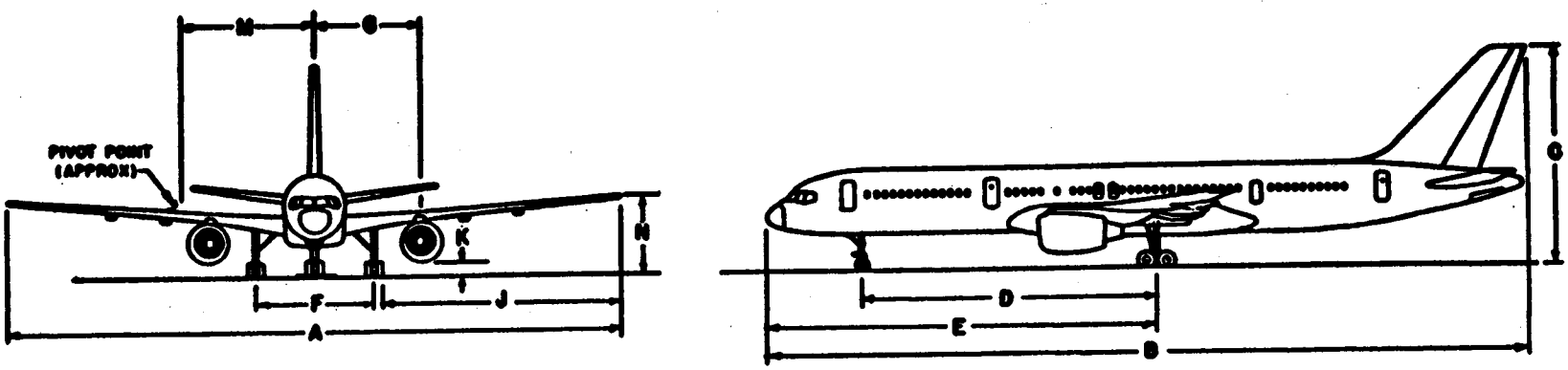

Figure A12-30. Boeing 757

MODEL	MAXIMUM TAKEOFF WEIGHT	MAXIMUM LANDING WEIGHT	A	B	C	D	E	F	G	J	K	M	N	TURN RADIUS
200	282,000 LB 127 913 KG	257,000 LB 116 573 KG	156'1" 47.57M	159'2" 48.51M	52'11" 16.13M	64'7" 19.69M	79'6" 24.23M	30'6" 9.30M	26'0" 7.92M	60'1" 18.31M	2'8" 0.81M	36'0" 10.97M	16'3" 4.95M	117'0" 35.66M
200ER	335,000 LB 151 953 KG	278,000 LB 126 099 KG	156'1" 47.57M	159'2" 48.51M	52'11" 16.13M	64'7" 19.69M	79'6" 24.23M	30'6" 9.30M	26'0" 7.92M	60'1" 18.31M	2'8" 0.81M	36'0" 10.97M	16'3" 4.95M	117'0" 35.66M
300	345,000 LB 156 489 KG	300,000 LB 136 078 KG	156'1" 47.57M	180'3" 54.94M	52'7" 16.03M	74'8" 22.76M	89'7" 27.31M	30'6" 9.30M	26'0" 7.92M	60'1" 18.31M	2'10" 0.86M	41'0" 12.50M	16'1" 4.90M	123'0" 37.49M
300ER	380,000 LB 172 365 KG	300,000 LB 136 078 KG	156'1" 47.57M	180'3" 54.94M	52'7" 16.03M	74'8" 22.76M	89'7" 27.31M	30'6" 9.30M	26'0" 7.92M	60'1" 18.31M	2'10" 0.86M	41'0" 12.50M	16'1" 4.90M	123'0" 37.49M

NOTE: OPTIONAL TAKEOFF AND LANDING WEIGHTS:

200	300,000 LB (136 078 KG) 270,000 LB (122 470 KG)	310,000 LB (140 614 KG) 270,000 LB (122 470 KG)	315,000 LB (142 882 KG) 272,000 LB (123 377 KG)	MAXIMUM TAKEOFF WEIGHT. MAXIMUM LANDING WEIGHT.
200ER	345,000 LB (156 489 KG) 278,000 LB (126 099 KG)	351,000 LB (159 211 KG) 278,000 LB (126 099 KG)	380,000 LB (172 365 KG) 285,000 LB (129 274 KG)	387,000 LB (175 540 KG) 285,000 LB (129 274 KG)	MAXIMUM TAKEOFF WEIGHT. MAXIMUM LANDING WEIGHT.
300	350,000 LB (158 757 KG) 300,000 LB (136 078 KG)	MAXIMUM TAKEOFF WEIGHT. MAXIMUM LANDING WEIGHT.		
300ER	387,000 LB (175 540 KG) 300,000 LB (136 078 KG)	400,000 LB (181 437 KG) 320,000 LB (145 150 KG)	407,000 LB (184 612 KG) 320,000 LB (145 150 KG)	MAXIMUM TAKEOFF WEIGHT. MAXIMUM LANDING WEIGHT.

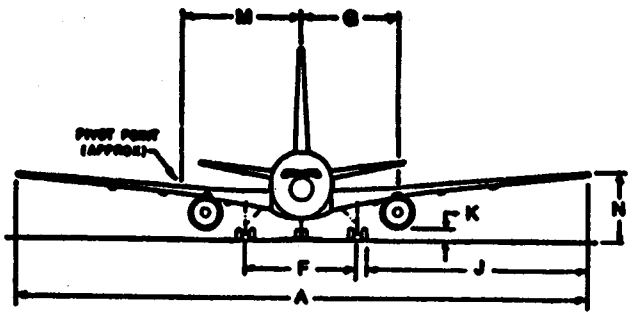

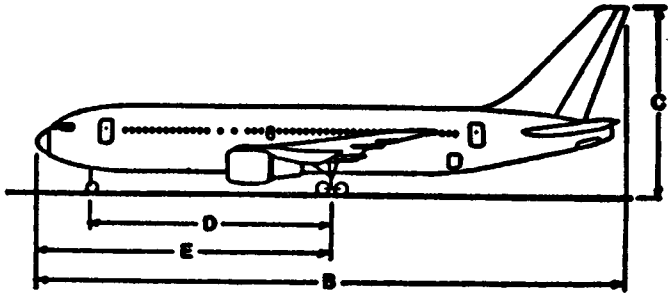

Figure A12-31. Boeing 767

MODEL	MAXIMUM TAKEOFF WEIGHT	MAXIMUM LANDING WEIGHT	A	B	C	D	E	F	G	H	J	K	L	M	N	TURN RADIUS
100	74,600 LB 33 838 KG	71,800 LB 32 591 KG	86'5" 26.34M	85'10" 26.16M	28'3" 8.61M	33'1" 10.08M	40'7" 12.37M	15'6" 4.72M	13'7" 4.14M	22'4" 6.81M	33'8" 10.26M	5'0" 1.52M	4'8" 1.42M	15'6" 4.72M	13'11" 4.24M	37'10" 11.53M
200	88,250 LB 40 030 KG	77,000 LB 34 927 KG	86'5" 26.34M	93'8" 28.55M	28'3" 8.61M	36'9" 11.20M	44'2" 13.46M	15'6" 4.72M	13'7" 4.14M	22'4" 6.81M	33'8" 10.26M	5'0" 1.52M	4'7" 1.40M	15'6" 4.72M	13'11" 4.24M	41'2" 12.55M
300	104,000 LB 47 174 KG	90,000 LB 40 823 KG	86'5" 26.34M	104'2" 31.75M	28'1" 8.56M	36'9" 11.20M	48'10" 14.88M	15'6" 4.72M	13'7" 4.14M	22'4" 6.81M	33'8" 10.26M	5'0" 1.52M	4'7" 1.40M	15'6" 4.72M	13'11" 4.24M	46'8" 14.22M

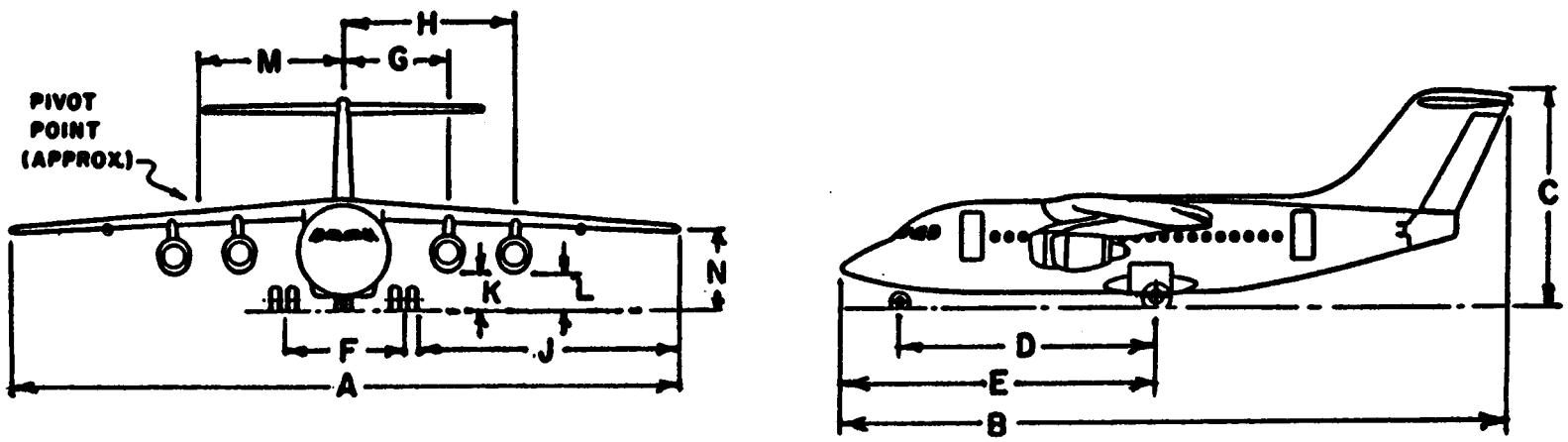

Figure A12-32. British Aerospace 146

MODEL	MAXIMUM TAKEOFF WEIGHT	MAXIMUM LANDING WEIGHT	A	B	C	D	E	F	G	H	J	K	L	M	N	TURN RADIUS
44D4	210,000 LB 95 254 KG	165,000 LB 74 843 KG	142'4" 43.38M	136'10" 41.71M	38'5" 11.71M	49'11" 15.21M	62'8" 19.10M	31'0" 9.45M	15'6" 4.72M	31'8" 9.65M	53'11" 16.43M	1'2" 0.36M	1'8" 0.51M		10'3" 3.12M	113'0" 34.44M
44-6	205,000 LB 92 986 KG	165,000 LB 74 843 KG	142'4" 43.38M	136'10" 41.71M	38'5" 11.71M	49'11" 15.21M	62'8" 19.10M	31'0" 9.45M	15'6" 4.72M	31'8" 9.65M	53'11" 16.43M	1.2" 0.36M	1'8" 0.51M		10'3" 3.12M	113'0" 34.44M
44-J	210,000 LB 95 254 KG	175,000 LB 79 379 KG	142'4" 43.38M	152'0" 46.33M	38'5" 11.71M	60'0" 18.29M	72'9" 22.17M	31'0" 9.45M	15'6" 4.72M	31'8" 9.65M	53'11" 16.43M	1'2" 0.36M	1'8" 0.51M		10'3" 3.12M	

Figure A12-33. Canadiar CL-44

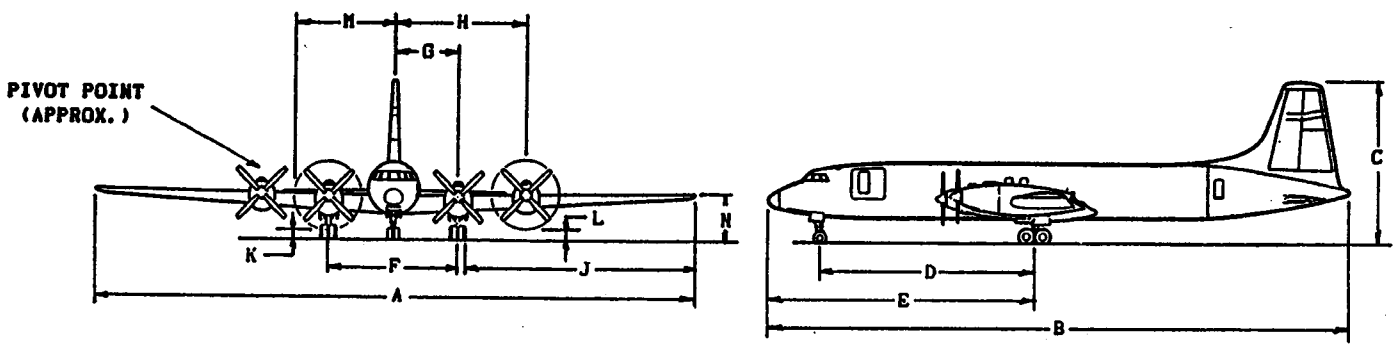

MODEL	MAXIMUM TAKEOFF WEIGHT	MAXIMUM LANDING WEIGHT	A	B	C	D	E	F	G	J	K	M	N	TURN RADIUS
66	58,156 LB 26 379 KG	53,000 LB 24 040 KG	105'4" 32.11M	81'6" 24.84M	29'2" 8.89M	26'2" 7.98M	35'3" 10.74M	25'0" 7.62M	12'6" 3.81M	39'0" 11.89M	1'0" 0.30M		13'0" 3.96M	65'0" 19.81M

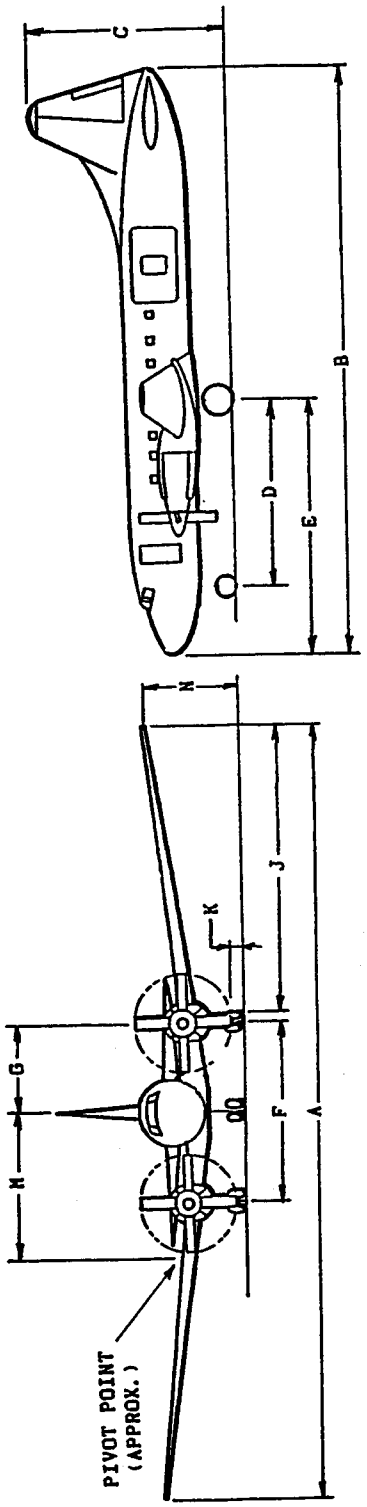

Figure A12-34. Canadiar CL-66

MODEL	MAXIMUM TAKEOFF WEIGHT	MAXIMUM LANDING WEIGHT	A	B	C	D	E	F	G	J	K	M	N	TURN RADIUS
I	11,850 LB 5 375 KG	11,350 LB 5 148 KG	47'1" 14.35M	43'6" 13.26M	14'4" 4.37M	15'2" 4.62M		12'7" 3.84M		14'11" 4.55M				
II	13,300 LB 6 033 KG	12,700 LB 5 761 KG	51'8" 15.75M	47'2" 14.38M	15'0" 4.57M									
S/II	15,100 LB 6 849 KG	14,400 LB 6 532 KG	52'2" 15.90M	47'2" 14.38M	15'0" 4.57M									
III	22,000 LB 9 979 KG	20,000 LB 9 072 KG	53'6" 16.31M	55'6" 16.92M	16'10" 5.13M									
V	16,100 LB 7 303 KG		52'2" 15.90M	49'11" 14.91M	15'0" 4.57M									

Figure A12-35. Cessna Citation

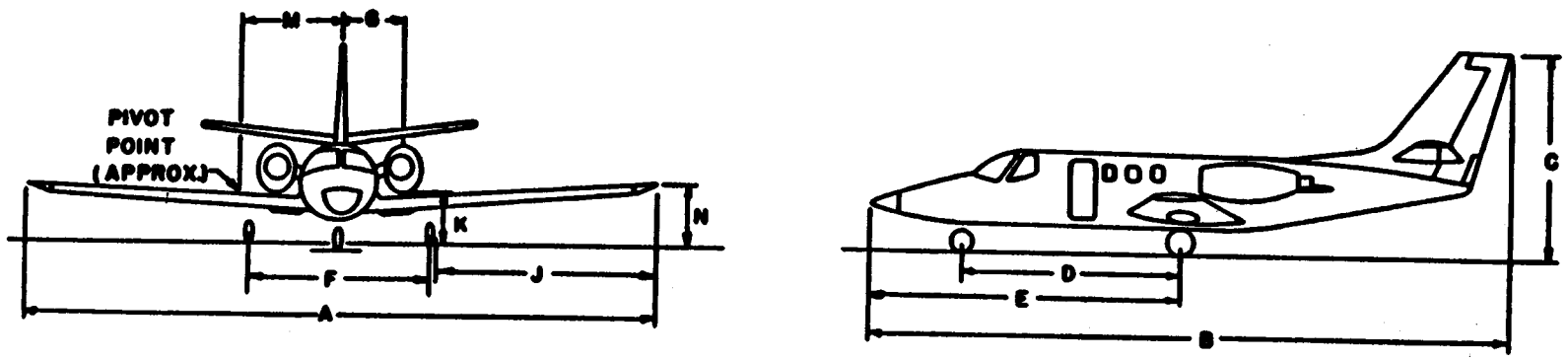

MODEL	MAXIMUM TAKEOFF WEIGHT	MAXIMUM LANDING WEIGHT	A	B	C	D	E	F	G	J	K	N	TURN RADIUS
C-212 200	16,976 LB 7 700 KG	16,424 LB 7 450 KG	62'3" 18.97M	49'10" 15.19M	20'8" 6.30M	17'10" 5.44M		10'2" 3.10M	8'8" 2.64M	26'1" 7.95M	4'2" 1.27M	9'2" 2.79M	49'2" 14.99M
235	31,752 LB 14 402 KG	31,311 LB 14 202 KG	84'8" 25.81M	70'3" 21.41M	26'10" 8.18M	22'8" 6.91M		12'10" 3.91M	11'6" 3.51M	35'11" 10.95M	5'2" 1.57M		

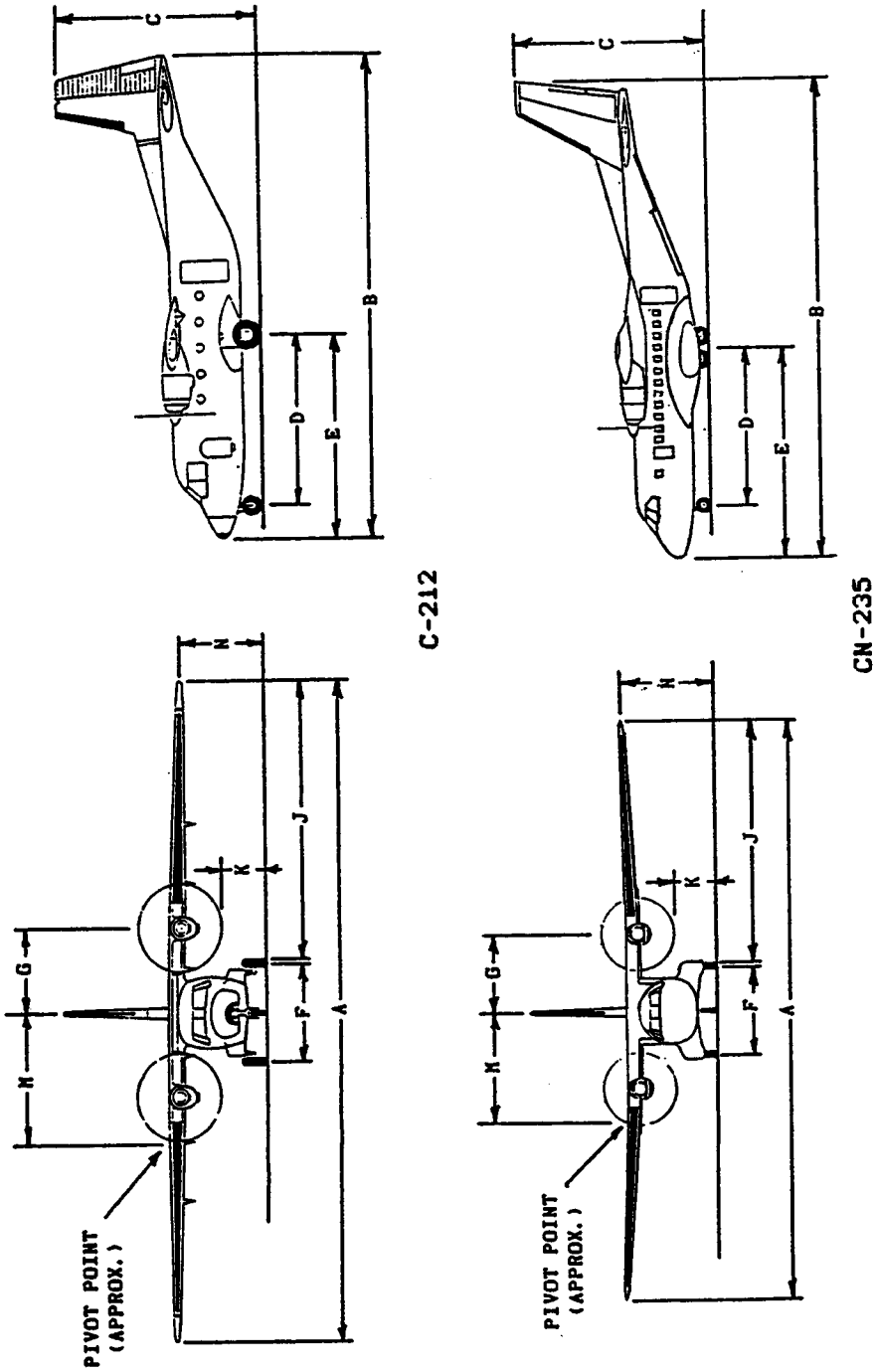

Figure A12-36. Construcciones Aeronauticas CASA C-212 and 235

MODEL	MAXIMUM TAKEOFF WEIGHT	MAXIMUM LANDING WEIGHT	A	B	C	D	E	F	G	J	K	M	N	TURN RADIUS
240	41,790 LB 18 956 KG	39,800 LB 18 053 KG	91'9" 27.97M	74'8" 22.76M	26'11" 8.20M	24'10" 7.57M	32'9" 9.98M	25'0" 7.62M	12'6" 3.81M	32'2" 9.80M	1'0" 0.31M	14'8" 4.47M	9'0" 2.74M	60'6" 18.44M
340	49,100 LB 22 271 KG	46,500 LB 21 092 KG	105'4" 32.18M	81'6" 24.84M	28'2" 8.59M	26'2" 7.98M	34'1" 10.39M	25'0" 7.62M	12'6" 3.81M	38'7" 11.76M	1'0" 0.31M	14'8" 4.47M	11'0" 3.35M	67'4" 20.52M
440	49,100 LB 22 271 KG	47,650 LB 21 614 KG	105'4" 32.18M	81'6" 24.84M	28'2" 8.59M	26'2" 7.98M	36'5" 11.10M	25'0" 7.62M	12'6" 3.81M	38'7" 11.76M	1'0" 0.31M	14'8" 4.47M	11'0" 3.35M	67'4" 20.52M
580	54,600 LB 24 766 KG	52,000 LB 23 587 KG	105'4" 32.18M	81'6" 24.84M	29'2" 8.89M	26'2" 7.98M	36'5" 11.10M	25'0" 7.62M	12'6" 3.81M	38'7" 11.76M	1'0" 0.31M	14'8" 4.47M	11'0" 3.35M	67'4" 20.52M
600	46,200 LB 20 956 KG	44,000 LB 19 958 KG	91'9" 27.97M	74'8" 22.76M	26'11" 8.20M	24'10" 7.57M	32'9" 9.98M	25'0" 7.62M	12'6" 3.81M	32'2" 9.80M	1'3" 0.38M	14'8" 4.47M	9'0" 2.74M	60'6" 18.44M
640	55,000 LB 24 948 KG	52,500 LB 23 814 KG	105'4" 32.18M	81'6" 24.84M	28'2" 8.59M	26'2" 7.98M	36'5" 11.10M	25'0" 7.62M	12'6" 3.81M	38'7" 11.76M	1'1" 0.33M	14'8" 4.47M	11'0" 3.35M	67'4" 20.52M

NOTE; MODELS 240, 340, 440 HAVE RECIPROCATING ENGINES. ALL OTHERS HAVE TURBOPROP ENGINES.

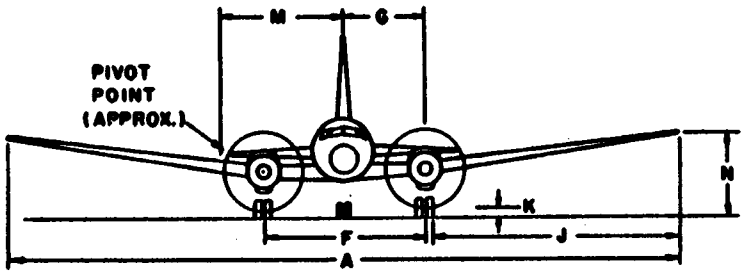

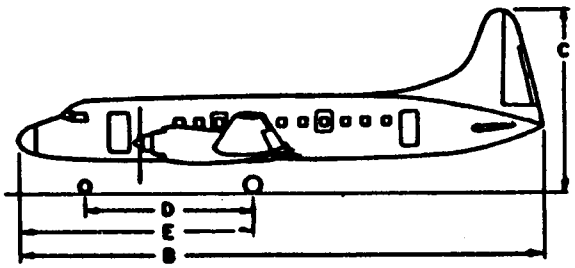

Figure A12-37. Convair-liner and Turboprop Conversions

MODEL	MAXIMUM TAKEOFF WEIGHT	MAXIMUM LANDING WEIGHT	A	B	C	D	E	F	G	J	K	M	N	TURN RADIUS
CARIBOU	28,500 LB 12 927 KG	28,500 LB 12 927 KG	95'7" 29.13M	72'7" 22.12M	31'10" 9.70M			23'1" 7.04M		35'3" 10.74M				

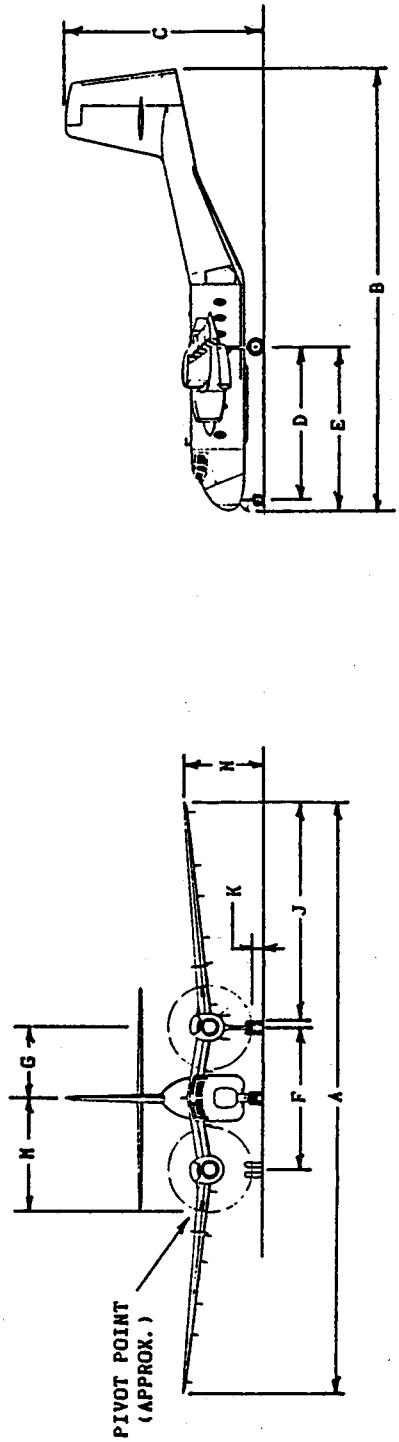

Figure A12-38. De Havilland Canada C-7 Caribou

MODEL	MAXIMUM TAKEOFF WEIGHT	MAXIMUM LANDING WEIGHT	A	B	C	D	E	F	G	J	K	M	N	TURN RADIUS
DASH 7	43,000 LB 19 504 KG	41,000 LB 18 597 KG	93'0" 28.35M	80'8" 24.59M	26'2" 7.98M	27'6" 8.38M		23'6" 7.16M		33'8" 10.26M	5'3" 1.60M		14'2" 4.32M	
DASH 8 100	34,500 LB 15 649 KG	33,900 LB 15 377 KG	90'0" 27.43M	84'3" 25.68M	24'7" 7.49M	32'2" 9.80M		25'10" 7.87M	12'11" 3.94M		3'1" 0.94M		11'11" 3.63M	
DASH 8 300	41,100 LB 18 643 KG	40,000 LB 18 144 KG	90'0" 27.43M	84'3" 25.68M	24'7" 7.49M	32'2" 9.80M		25'10" 7.87M	12'11" 3.94M		3'1" 0.94M		11'11" 3.63M	

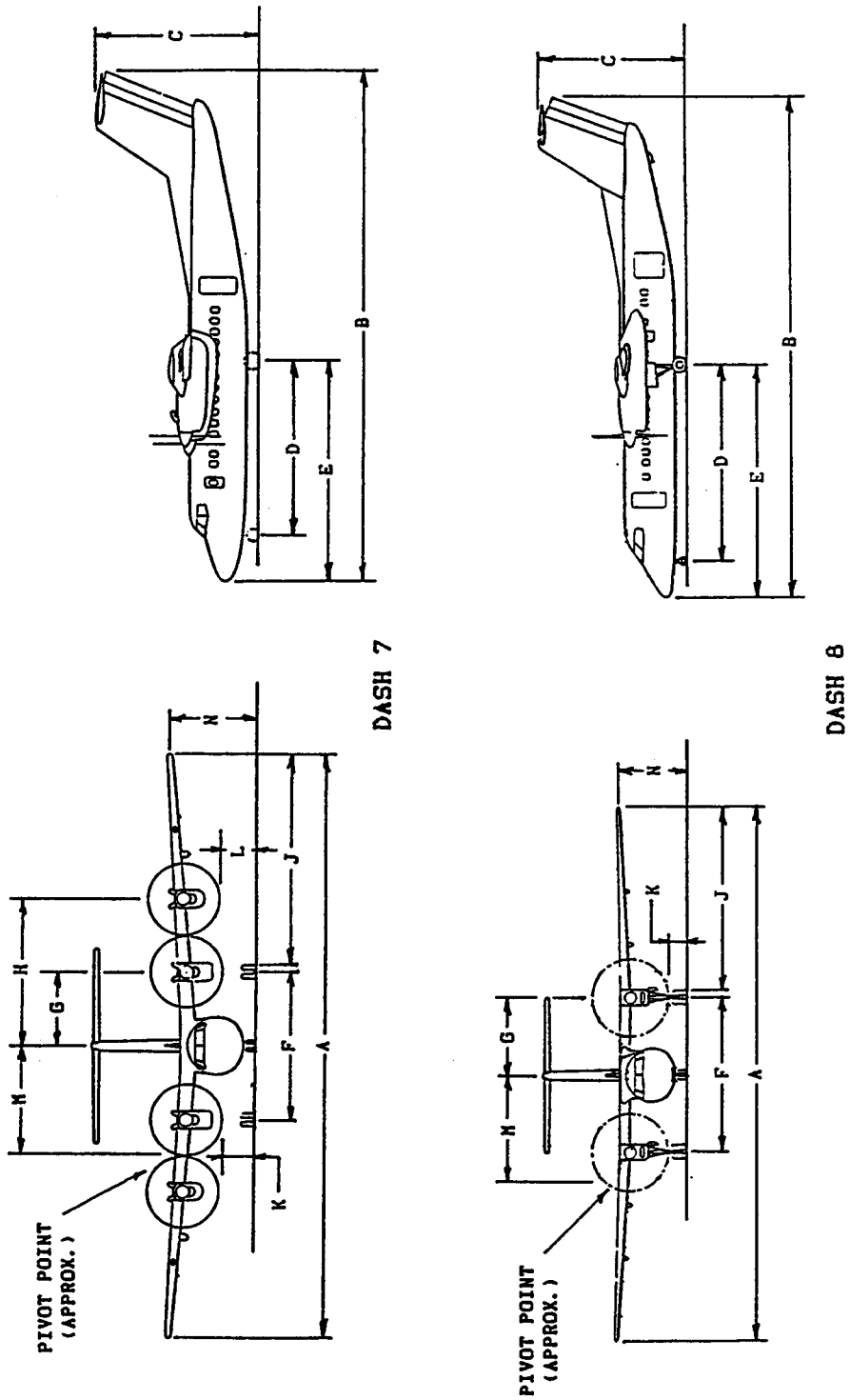

Figure A12-39. De Havilland Canada DASH 7 & DASH 8

MODEL	MAXIMUM TAKEOFF WEIGHT	MAXIMUM LANDING WEIGHT	A	B	C	D	E	F	G	H	J	K	L	M	N	TURN RADIUS
GOLBE-MASTER	175,000 LB 79 379 KG	110,000 LB 49 895 KG	174'2" 53.10M	130'5" 39.77M	48'4" 14.72M	37'3" 11.35M		34'2" 10.41M	17'1" 5.21M			3'0" 0.91M				

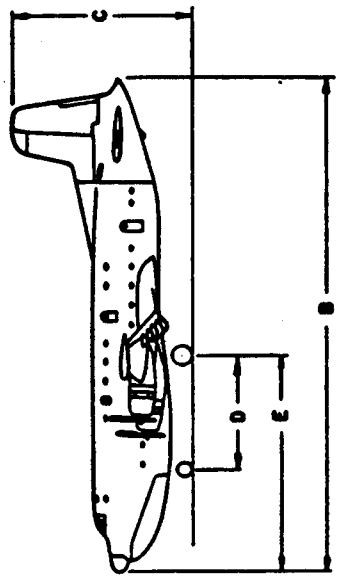

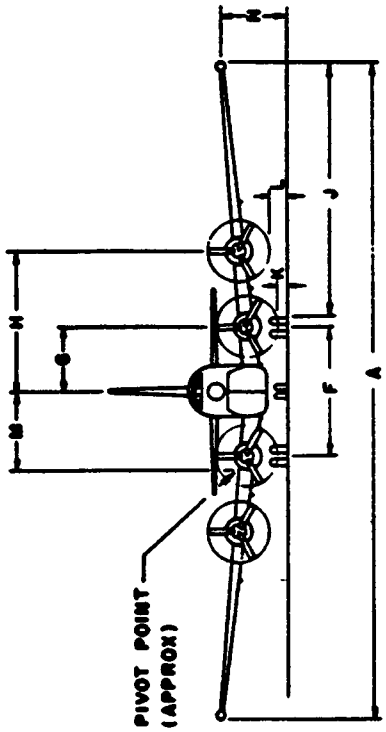

Figure A12-40. Douglas C-124 Globemaster

MODEL	MAXIMUM TAKEOFF WEIGHT	MAXIMUM LANDING WEIGHT	A	B	C	D	F	NUMBER SEATS	TURN RADIUS
TWIN OTTER	12,500 LB 5 670 KG	12,300 LB 5 579 KG	65'0" 19.81M	51'8" 15.75M	19'6" 5.94M	14'9" 4.50M	12'6" 3.81M	21	48'0" 14.63M

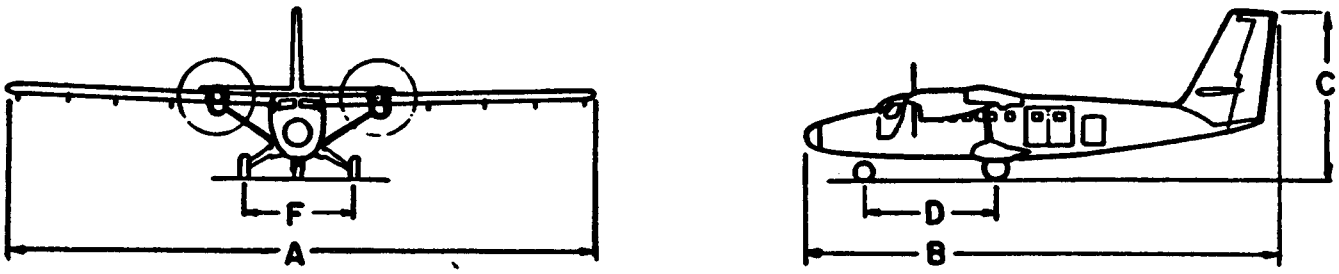

Figure A12-41. De Havilland Canada DHC-6 Twin Otter

MODEL	MAXIMUM TAKEOFF WEIGHT	MAXIMUM LANDING WEIGHT	A	B	C	D	E	F	G	J	K	M	N	TURN RADIUS
228-201	13,183 LB 5 980 KG	13,007 LB 5 900 KG	55'8" 16.97M	54'4" 16.56M	15'11" 4.85M	20'8" 6.30M	25'5" 7.75M	10'10" 3.30M	7'10" 2.39M	21'11" 6.68M	3'6" 1.07M	21'4" 6.50M	6'3" 1.91M	48'6" 14.78M
228-202	13,669 LB 6 200 KG	13,007 LB 5 900 KG	55'8" 16.97M	54'4" 16.56M	15'11" 4.85M	20'8" 6.30M	25'5" 7.75M	10'10" 3.30M	7'10" 2.39M	21'11" 6.68M	3'6" 1.07M	21'4" 6.50M	6'3" 1.91M	48'6" 14.78M

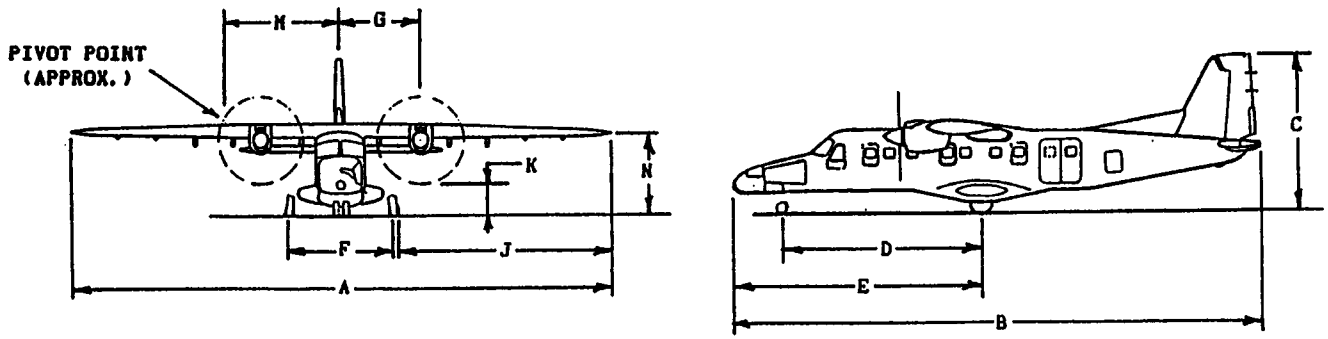

Figure A12-42. Dornier Gmb H

MODEL	MAXIMUM TAKEOFF WEIGHT	MAXIMUM LANDING WEIGHT	A	B	C	D	E	F	G	J	K	M	N	TURN RADIUS
DC-3	25,200 LB 11 431 KG	25,200 LB 11 431 KG	95'0" 28.96M	64'6" 19.66M	23'6" 7.16M	37'11" 11.56M	18'6" 5.64M	18'6" 5.64M	9'3" 2.82M	37'7" 11.46M	1'4" 0.41M	9'3" 2.82M	9'4" 2.84M	57'3" 17.45M

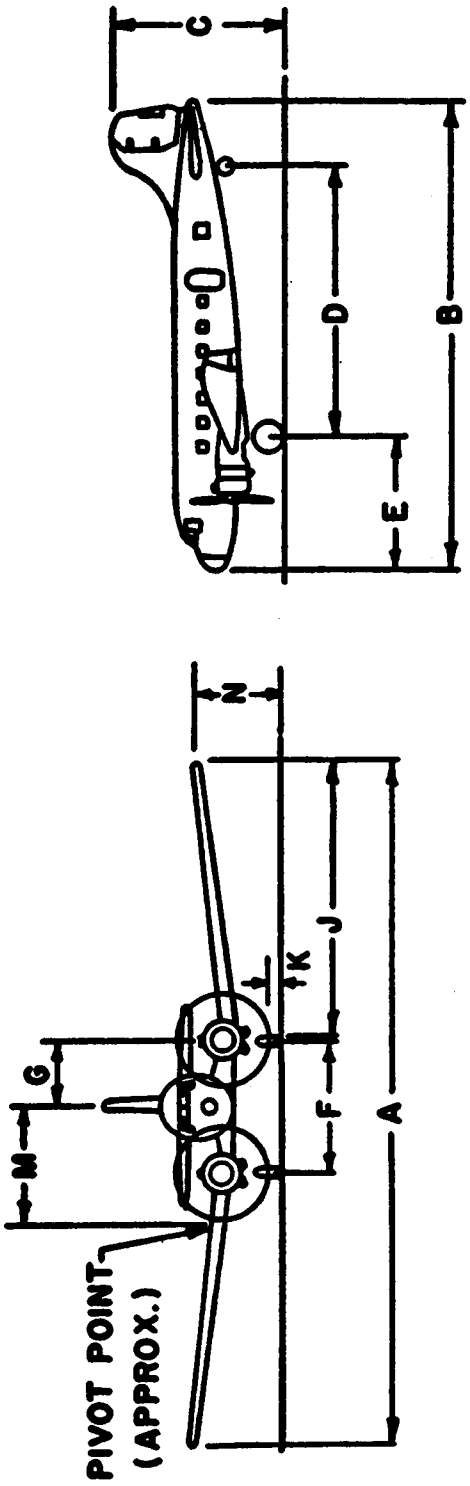

Figure A12-43. Douglas DC-3

MODEL	MAXIMUM TAKEOFF WEIGHT	MAXIMUM LANDING WEIGHT	A	B	C	D	E	F	G	H	J	K	L	M	N	TURN RADIUS
DC-4	73,000 LB 33 112 KG	63,500 LB 28 803 KG	117'6" 35.81M	93'11" 28.63M	27'11" 8.51M	27'5" 8.36M	36'0" 10.98M	24'8" 7.52M	12'4" 3.76M	26'4" 8.03M	44'7" 13.59M	2'2" 0.66M	3'9" 1.14M	13'9" 4.19M	13'6" 4.11M	86'2" 26.26M
DC-6	104,000 LB 47 174 KG	86,200 LB 39 100 KG	117'6" 35.81M	105'7" 32.18M	29'3" 8.92M	36'2" 11.02M	44'9" 13.64M	24'8" 7.52M	12'4" 3.76M	26'4" 8.03M	44'7" 13.59M	1'11" 0.58M	3'6" 1.07M	13'11" 4.24M	13'6" 4.11M	72'8" 22.15M
DC-7	143,000 LB 64 864 KG	111,000 LB 50 349 KG	127'6" 38.86M	112'3" 34.21M	31'8" 9.65M	39'6" 12.04M	48'1" 14.66M	34'8" 10.57M	17'4" 5.28M	31'4" 9.55M	44'7" 13.59M	1'3" 0.38M	3'10" 0.87M	17'4" 5.28M	13'6" 4.11M	81'1" 24.71M

NOTE: MODEL DC-4 HAS ROUNDED VERTICAL STABILIZER AND CIRCULAR CABIN WINDOWS.

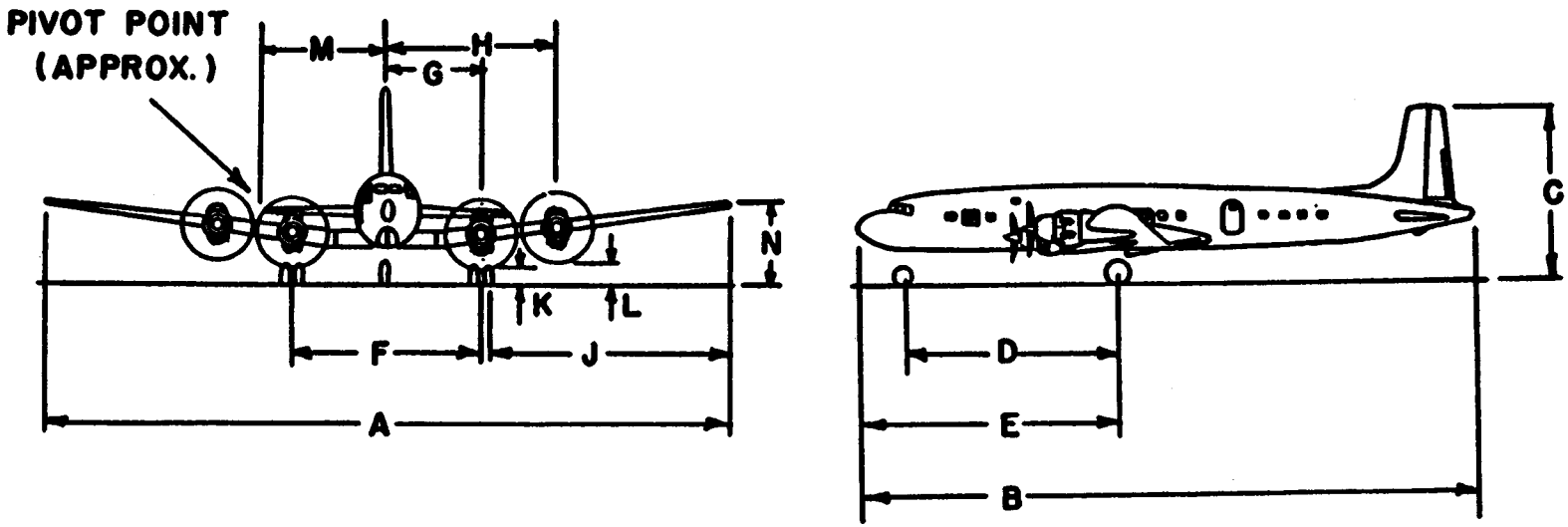

Figure A12-44. Douglas DC-4/6/7

MODEL	MAXIMUM TAKEOFF WEIGHT	MAXIMUM LANDING WEIGHT	A	B	C	D	E	F	G	J	K	M	N	TURN RADIUS
EMB-110P1	12,500 LB 5 670 KG	12,500 LB 5 670 KG	50'3" 15.32M	49'6" 15.09M	16'6" 5.03M	16'2" 4.93M	23'8" 7.21M	16'3" 4.95M	7'11" 2.41M	16'9" 5.11M	0'10" 0.25M	16'6" 5.03M	6'7" 2.01M	47'7" 14.50M
EMB-110P1/41	13,007 LB 5 900 KG	12,566 LB 5 700 KG												
EMB-110P2	12,500 LB 5 670 KG	12,500 LB 5 670 KG												
EMB-110P2/41	13,007 LB 5 900 KG	12,599 LB 5700 KG												

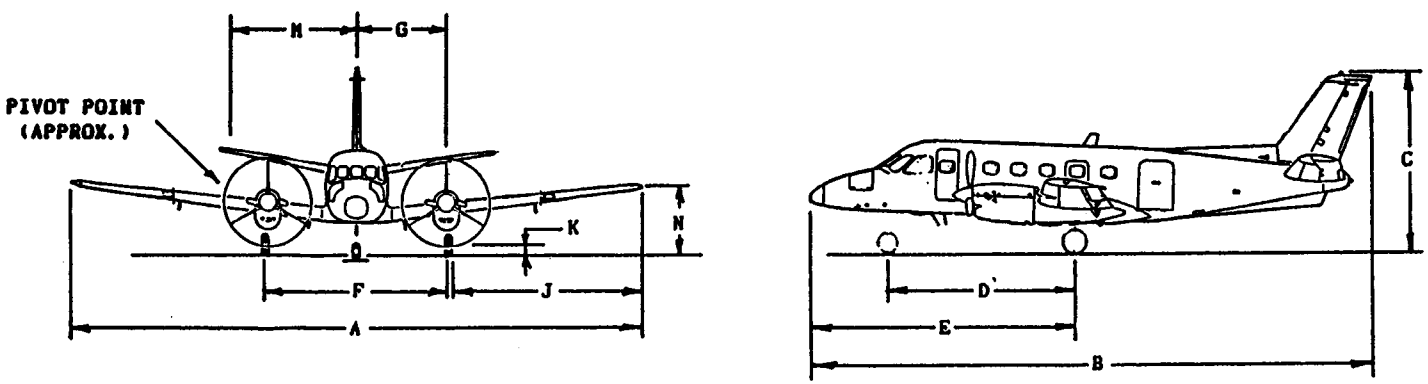

Figure A12-45. Embraer EmB 110

MODEL	MAXIMUM TAKEOFF WEIGHT	MAXIMUM LANDING WEIGHT	A	B	C	D	E	F	G	J	K	M	N	TURN RADIUS
EMB 120	11,500 LB 5 216 KG	11,250 LB 5 103 KG	64'11" 19.79M	65'7" 19.99M	20'10" 6.35M	22'11" 6.99M		21'7" 21.58M	10'10" 3.30M	20'6" 6.25M	1'9" 0.53M	21'8" 6.60M		51'8" 15.75M

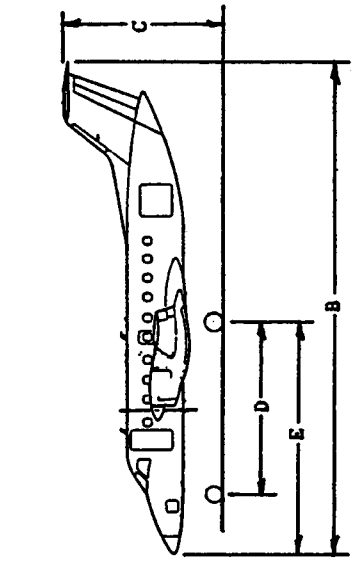

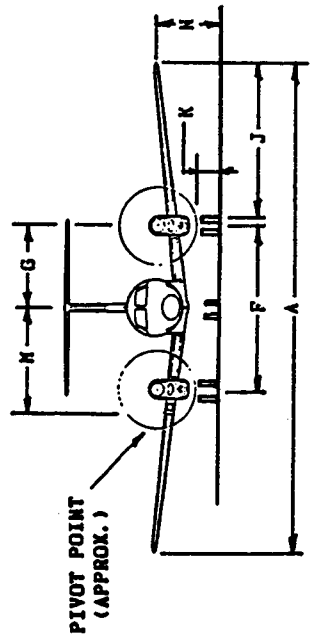

Figure A12-46. Embraer EmB 120

MODEL	MAXIMUM TAKEOFF WEIGHT	MAXIMUM LANDING WEIGHT	A	B	C	D	E	F	G	J	K	N	N	TURN RADIUS
FLYING BOXCAR	77,000 LB 34 927 KG	72,700 LB 32 976 KG	109'3" 33.32M	86'6" 26.38M	27'6" 8.38M			29'2" 8.89M		38'4" 11.68M	3'0" 0.91M		15'0" 4.56M	70'0" 21.34M

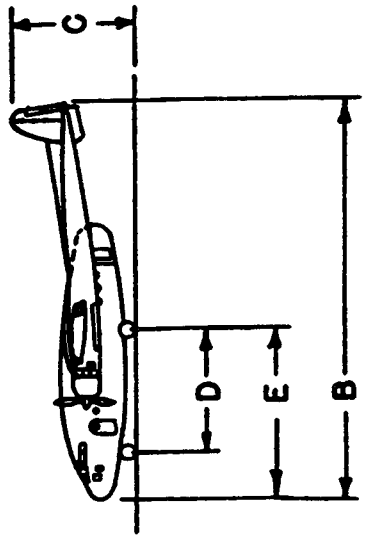

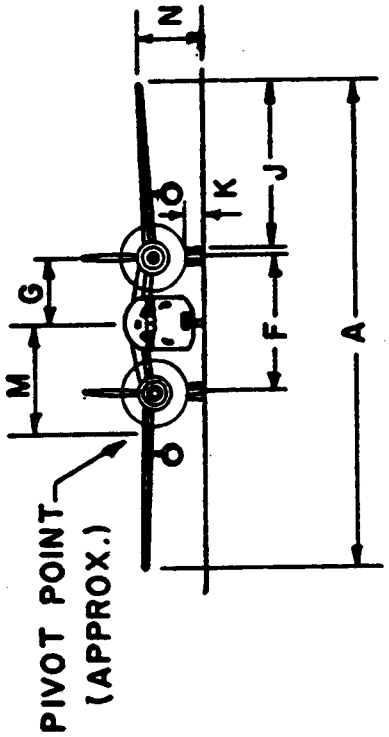

Figure A12-47. Fairchild C-119K Flying Boxcar

MODEL	MAXIMUM TAKEOFF WEIGHT	MAXIMUM LANDING WEIGHT	A	B	C	D	E	F	G	J	K	H	M	TURN RADIUS
PROVIDER	60,000 LB 27 216 KG	54,000 LB 24 494 KG	110'0" 33.52M	76'3" 23.24M	34'6" 10.52M			12'1" 3.68M	14'10" 4.52M	48'0" 14.63M	3'8" 1.12M	14'10" 4.52M	14'0" 4.27M	70'0" 21.34M

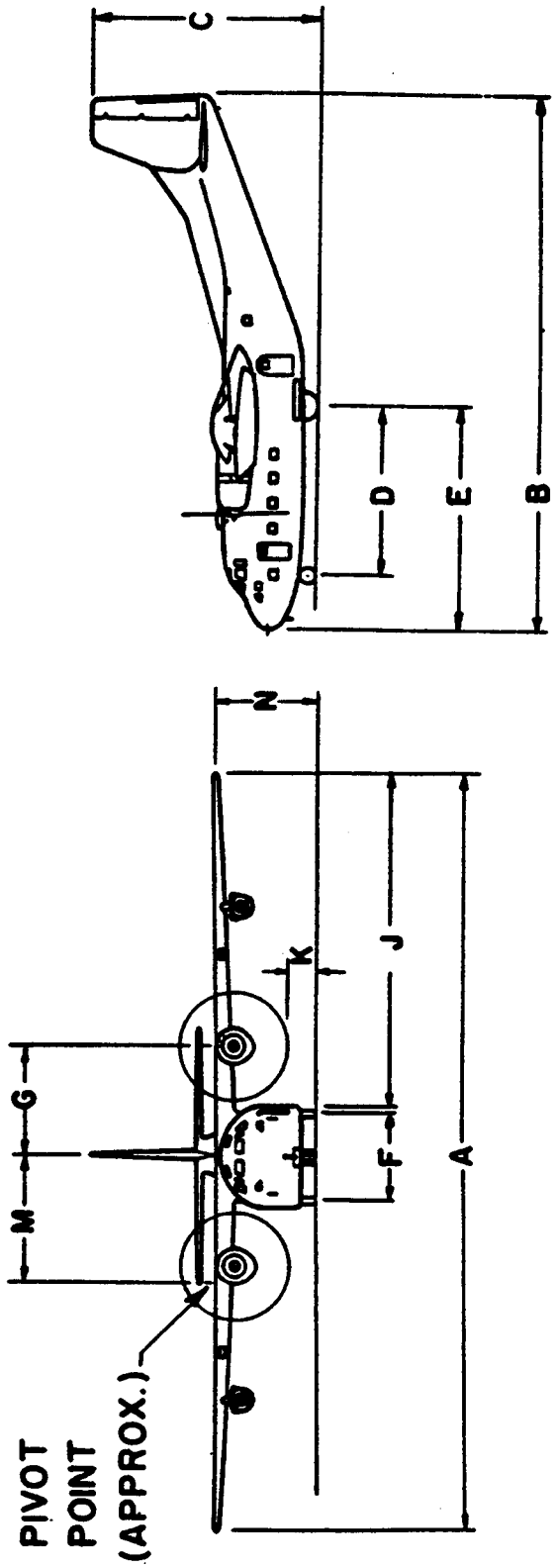

Figure A12-48. Fairchild C-123K Provider

MODEL	MAXIMUM TAKEOFF WEIGHT	MAXIMUM LANDING WEIGHT	A	B	C	D	E	F	G	J	K	M	N	TURN RADIUS
F-27, B	40,500 LB 18 370 KG	38,500 LB 17 463 KG	95'2" 29.52M	77'2" 23.52M	27'6" 8.38M	28'8" 8.73M	34'6" 10.52M	23'8" 7.22M	11'10" 3.61M	34'6" 10.52M	2'10" 0.87M	16'6" 5.03M	11'10" 3.61M	64'0" 19.51M
FH-227, C, E	43,500 LB 19 731 KG	43,000 LB 19 504 KG	95'2" 29.01M	83'1" 25.32M	27'6" 8.38M	34'7" 10.55M	40'3" 12.27M	23'8" 7.22M	11'10" 3.61M	34'9" 10.59M	3'2" 0.97M	12'4" 3.76M	11'10" 3.61M	59'7" 18.16M

NOTE: F-27A, J HAVE MAXIMUM (TAKEOFF) WEIGHT OF 42,000 LB (19 051 KG).
(LANDING) 40,000 LB (18 144 KG).

FH-227B, D HAVE MAXIMUM (TAKEOFF) WEIGHT OF 45,500 LB (20 638 KG).
(LANDING) 45,000 LB (20 412 KG).

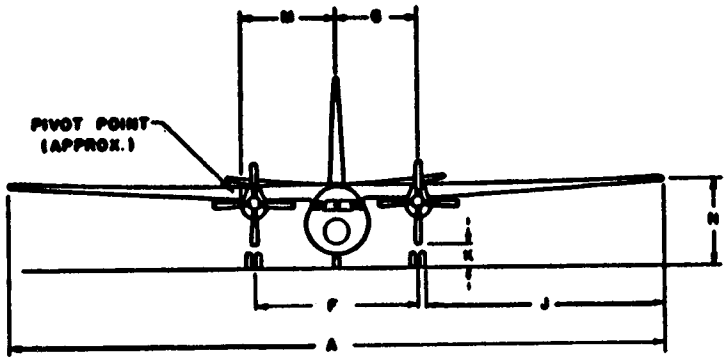

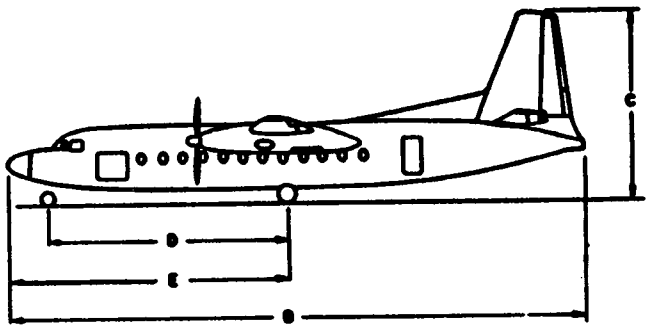

Figure A12-49. Fairchild F-27

MODEL	MAXIMUM TAKEOFF WEIGHT	MAXIMUM LANDING WEIGHT	A	B	C	D	E	F	G	J	K	M	N	NOTE	TURN RADIUS
100	40,500 LB 18 370 KG	40,000 LB 18 144 KG	95'2" 29.01M	77'2" 23.52M	27'11" 8.51M	28'8" 8.74M		23'8" 7.21M							
200, 400, 600	45,000 LB 20 412 KG	41,000 LB 18 597 KG	95'2" 29.01M	77'4" 23.57M	28'8" 8.74M	28'8" 8.74M	34'6" 10.52M	23'8" 7.21M	11'10" 3.61M	34'7" 10.54M		12'2" 3.71M	11'11" 3.63M	28'2" 8.59M	58'1" 17.70M
500	45,000 LB 20 412 KG	42,000 LB 19 051 KG	95'2" 29.01M	82'3" 25.07M	29'3" 8.92M	31'11" 9.73M	37'9" 11.51M	23'8" 7.21M	11'10" 3.61M	34'7" 10.54M		13'7" 4.14M	12'2" 3.71M	28'2" 8.59M	59'5" 18.11M

NOTE: CENTERLINE OF FUSELAGE TO CENTERLINE OF PYLON TANKS IF INSTALLED.

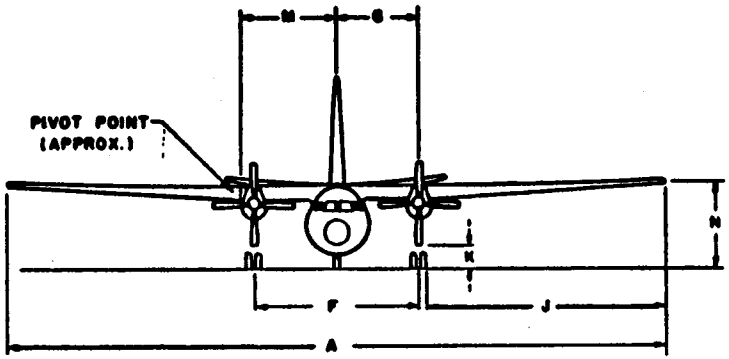

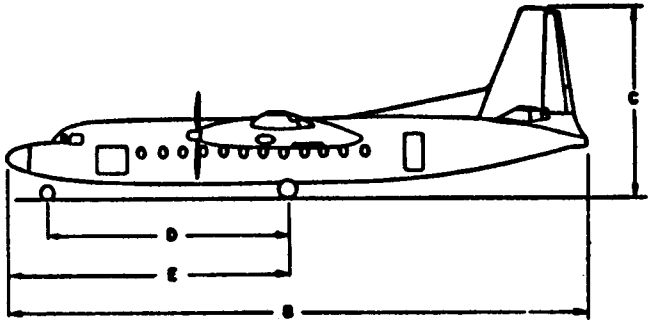

Figure A12-50. Fokker F-27

MODEL	MAXIMUM TAKEOFF WEIGHT	MAXIMUM LANDING WEIGHT	A	B	C	D	E	F	G	J	K	M	N	TURN RADIUS
1000	65,000 LB 29 484 KG	59,000 LB 26 762 KG	77'4" 23.57M	89'11" 27.42M	27'10" 8.48M	29'3" 8.89M		16'7" 5.11M	8'6" 2.59M	28'10" 8.78M	5'2" 1.60M	8.3" 2.51M	7'9" 2.37M	50'0" 15.24M
2000	65,000 LB 29 484 KG	59,000 LB 26 762 KG	77'4" 23.57M	97'2" 29.62M	27'10" 8.48M	33'11" 10.34M		16'7" 5.11M						
3000	73,000 LB 33 112 KG	64,000 LB 29 030 KG	82'3" 25.07M	89'11" 27.41M	27'10" 8.48M	29'3" 8.89M		16'7" 5.11M						
4000	73,000 LB 33 112 KG	66,500 LB 30 164 KG	82'3" 25.07M	97'2" 29.62M	27'10" 8.48M	33'11" 10.34M		16'7" 5.11M						
5000	70,800 LB 32 114 KG	64,000 LB 29 030 KG	82'3" 25.07M	89'11" 27.41M	27'10" 8.48M	29'3" 8.89M		16'7" 5.11M						
6000	73,000 LB 33 112 KG	66,500 LB 30 164 KG	82'3" 25.07M	97'2" 29.62M	27'10" 8.48M	33'11" 10.34M	46'4" 14.12M	16'7" 5.11M						

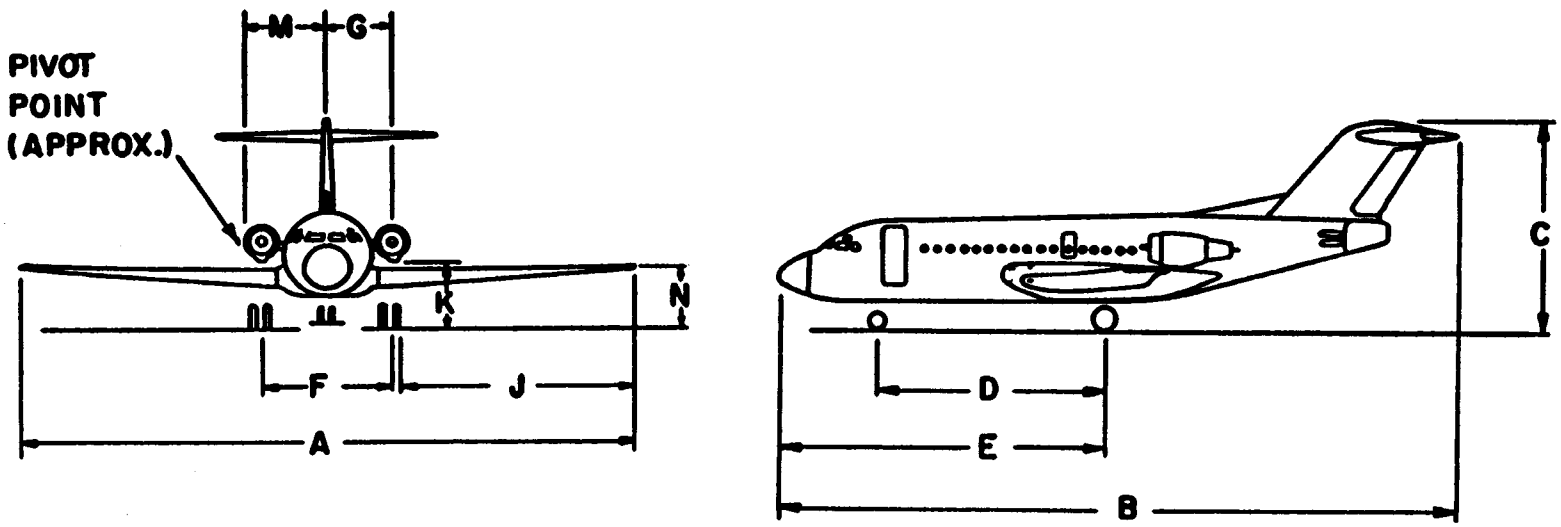

Figure A12-51. Fokker F-28

MODEL	MAXIMUM TAKEOFF WEIGHT	MAXIMUM LANDING WEIGHT	A	B	C	D	E	F	G	J	K	M	N	TURN RADIUS
24 24D, F	13,000 LB 5 897 KG	11,880 LB 5 389 KG	35'7" 10.85M	43'3" 13.18M	12'7" 3.84M	16'2" 4.98M	21'9" 6.63M	8'3" 2.51M	3'8" 1.12M	12'9" 3.89M	4'10" 1.49M	16'0" 4.88M	3'3" 0.99M	34'0" 10.36M
25 25B, C, D	15,000 LB 6 804 KG	13,300 LB 6 033 KG	35'7" 10.85M	47'7" 14.50M	12'7" 3.84M	16'2" 4.98M	26'0" 7.92M	8'3" 2.51M	3'8" 1.12M	13'1" 3.99M	4'10" 1.49M	16'0" 4.88M	3'3" 0.99M	34'0" 10.36M
25G	16,300 LB 7 394 KG	13,700 LB 6 214 KG	35'7" 10.85M	47'7" 14.50M	12'4" 3.76M	17'3" 5.26M	27'1" 8.25M	8'3" 2.51M	3'8" 1.12M	14'4" 4.26M	4'10" 1.49M		3'6" 1.07M	
28/29	15,000 LB 6 804 KG		43'9" 13.34M	47.7" 14.50M	12'4" 3.76M									
35/36	17,000 LB 7 711 KG	13,300 LB 6 033 KG	38'1" 11.61M	48'8" 14.83M	12'4" 3.76M									
35A/36A	18,300 LB 8 301 KG	15,300 LB 6 940 KG	39'6" 12.07M	48'8" 14.83M	12'4" 3.76M									
55/56 55C, ER, LR	21,500 LB 9 752 KG	18,000 LB 8 165 KG	43'9" 13.34M	55'1" 16.79M	14'8" 4.47M									

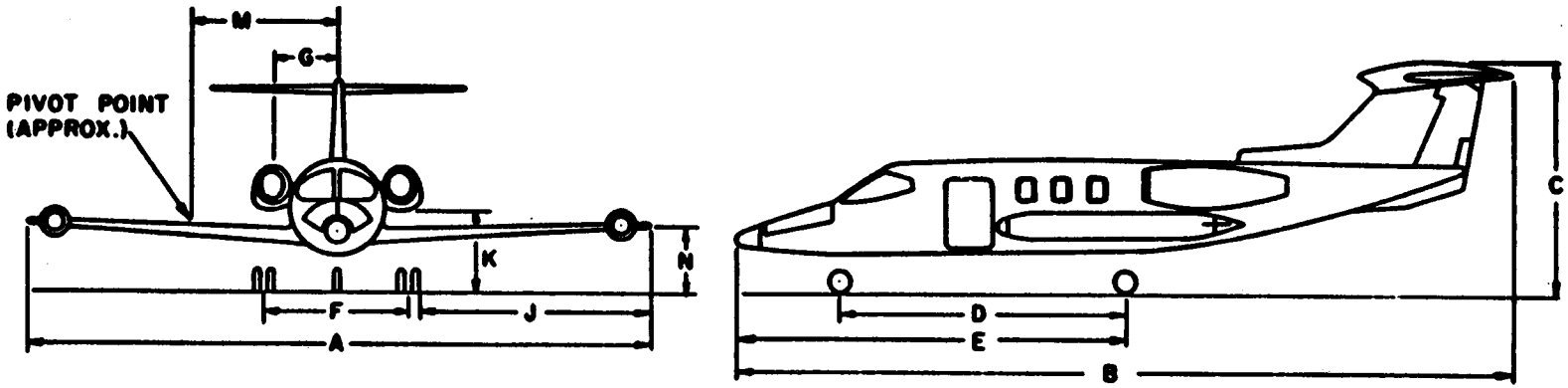

Figure A12-52. Gates Learjet

MODEL	MAXIMUM TAKEOFF WEIGHT	MAXIMUM LANDING WEIGHT	A	B	C	D	E	F	G	H	J	K	L	M	N	TURN RADIUS
880	184,500 LB 83 688 KG	137,000 LB 62 142 KG	120'0" 36.58M	129'4" 39.42M	36'0" 10.97M	53'1" 16.18M	64'10" 19.76M	18'10" 5.74M	22'2" 6.76M	41'4" 12.60M	49'3" 15.01M	2'8" 0.81M	3'11" 1.19M	19'5" 5.52M	10'11" 3.33M	84'0" 25.60M
990	246,200 LB 111 674 KG	202,000 LB 91 626 KG	120'0" 36.58M	139'2" 42.42M	39'6" 12.04M	57'3" 17.45M	68'11" 21.01M	19'11" 6.07M	22'2" 6.76M	41'4" 12.60M	48'10" 14.88M	2'9" 0.84M	4'0" 1.22M	29'3" 8.92M	12'9" 3.89M	93'8" 28.55M

NOTE: OPTIONAL TAKEOFF AND LANDING WEIGHTS.

880 193,500 LB (88 770 KG) MAXIMUM TAKEOFF WEIGHT.
155,000 LB (70 307 KG) MAXIMUM LANDING WEIGHT.

990 255,000 LB (115 666 KG) MAXIMUM TAKEOFF WEIGHT.

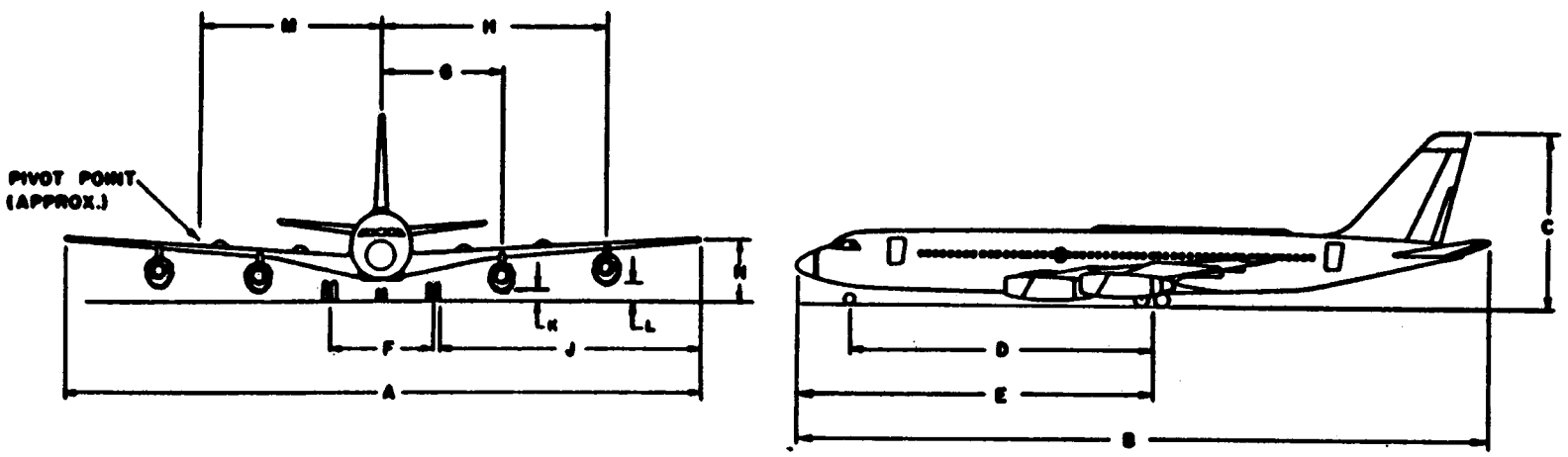

Figure A12-53. General Dynamics/Convair 880/990

MODEL	MAXIMUM TAKEOFF WEIGHT	MAXIMUM LANDING WEIGHT	A	B	C	D	E	F	G	J	K	M	N	TURN RADIUS
G-159C	33,600 LB 15 241 KG	30,400 LB 13 789 KG	78'4" 23.88M	75'4" 22.96M	23'0" 7.01M	19'10" 6.04M	26'8" 8.11M	24'7" 7.47M	12'1" 3.68M	25'6" 7.77M	1'6" 0.45M	12'1" 3.68M	8'8" 2.65M	51'7" 15.67M

NOTE: OPTIONAL MAXIMUM (TAKEOFF) WEIGHT 36,000 LB (16 329 KG).
(LANDING) 34,285 LB (15 551 KG).

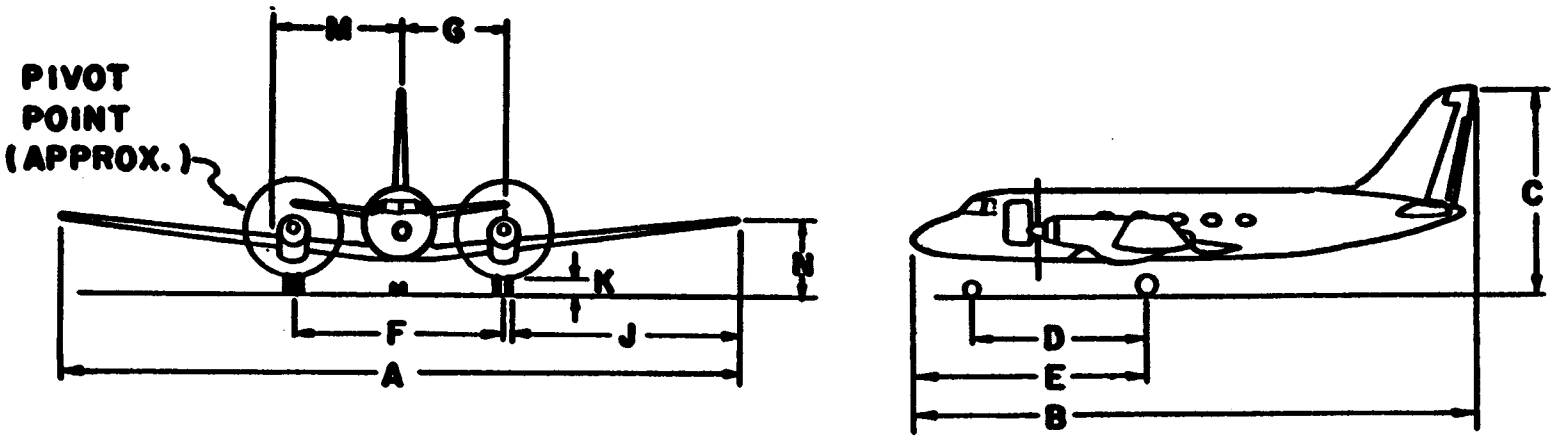

Figure A12-54. Grumman Gulfstream I

MODEL	MAXIMUM TAKEOFF WEIGHT	MAXIMUM LANDING WEIGHT	A	B	C	D	E	F	G	J	K	M	N	TURN RADIUS
II	65,300 LB 29 620 KG	58,500 LB 26 535 KG	68'10" 20.98M	79'11" 24.36M	24'6" 7.47M	33'4" 10.16M	40'5" 12.32M	13'8" 4.15M	6'3" 1.91M	26'8" 8.11M	8'10" 2.69M	6'9" 2.07M	6'0" 1.83M	45'0" 13.72M
II-TT	65,300 LB 29 620 KG		71'8" 21.84M	79'11" 24.36M	24'6" 7.47M									
III	69,700 LB 31 615 KG	58,500 LB 26 535 KG	77'10" 23.72M	83'1" 25.32M	24'5" 7.44M									47'6" 14.48M
IV	71,780 LB 32 559 KG	58,500 LB 26 535 KG	77'10" 23.72M	87'10" 26.77M	24'5" 7.44M									48'2" 14.68M

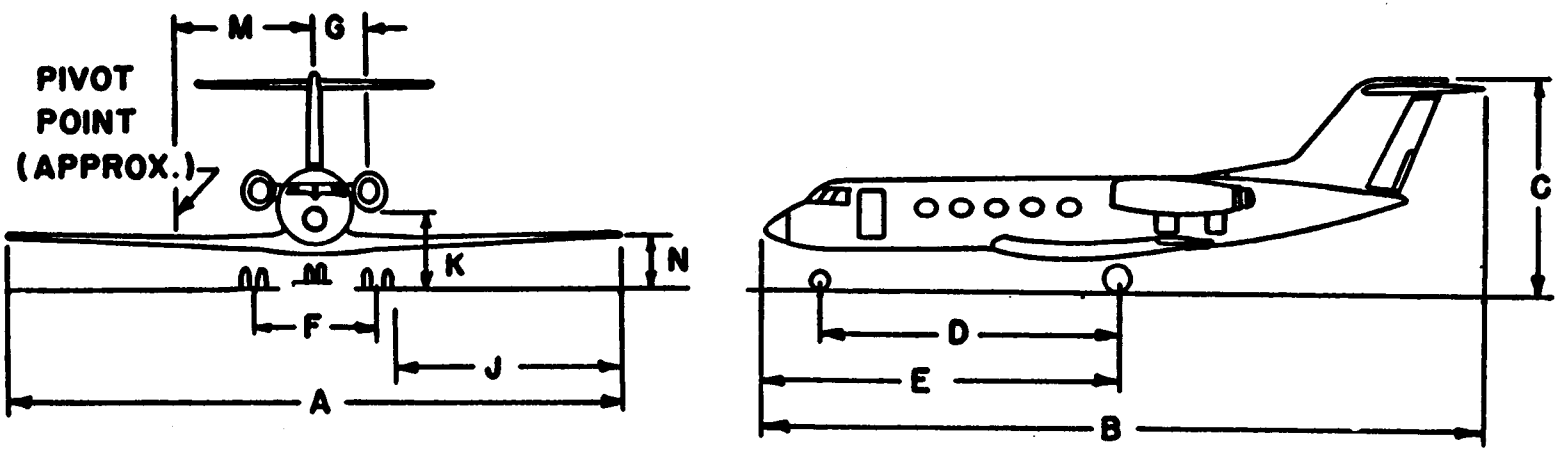

Figure A12-55. Grumman Gulfstream II

BUILDER	MODEL	NAME	MAXIMUM TAKEOFF WEIGHT	MAXIMUM LANDING WEIGHT	A	B	C	D	F	DRAFT	NUMBER SEATS	TURN RADIUS
GRUMMAN	G-64/ G-111	ALBATROSS	31,150 LB 14 129 KG	31,150 LB 14 129 KG	96'8" 29.46M	62'10" 19.15M	25'10" 7.87M	17'6" 5.33M	17'8" 5.38M	3'6" 1.07M	28	

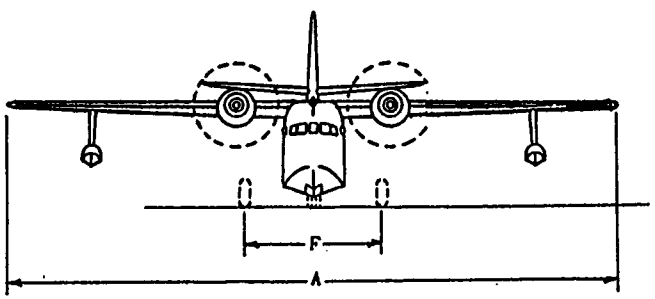

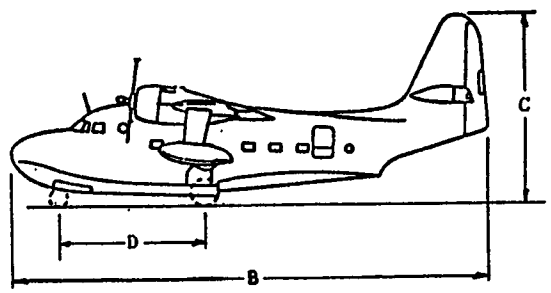

Figure A12-56. Grumman G-64/G-III

BUILDER	MODEL	NAME	MAXIMUM TAKEOFF WEIGHT	MAXIMUM LANDING WEIGHT	A	B	C	D	F	DRAFT	NUMBER SEATS	TURN RADIUS
GRUMMAN	G-73	MALLARD	12,750 LB 5 783 KG	12,750 LB 5 783 KG	66'8" 20.32M	48'4" 14.73M	18'9" 5.72M	14'10" 4.52M	12'10" 3.91M		10	

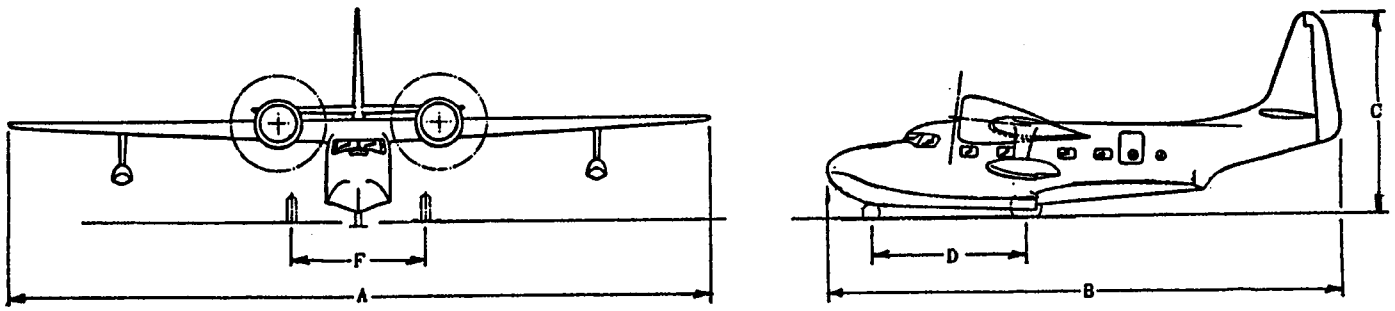

Figure A12-57. Grumman G-73

MODEL	MAXIMUM TAKEOFF WEIGHT	MAXIMUM LANDING WEIGHT	A	B	C	D	E	F	G	J	K	M	N	TURN RADIUS
HFB-320	20,280 LB 9 199 KG	19,400 LB 8 800 KG	47'6" 14.48M	54'6" 16.61M	16'2" 4.93M	22'1" 6.73M	28'2" 8.58M	7'9" 2.39M	4'8" 1.42M	19'7" 5.97M	5'11" 1.80M	8'3" 2.51M	7'3" 2.21M	29'5" 8.94M

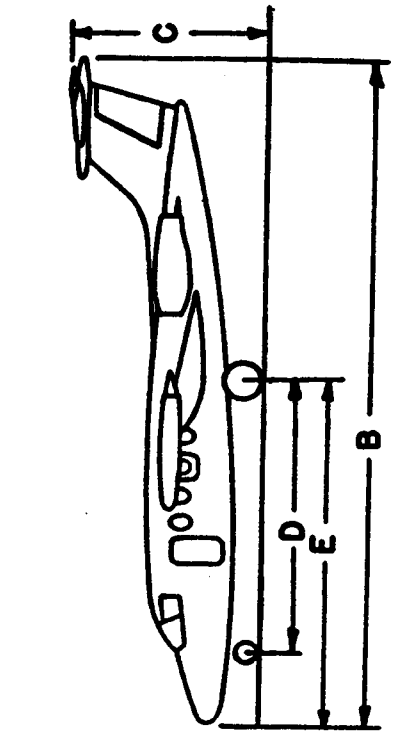

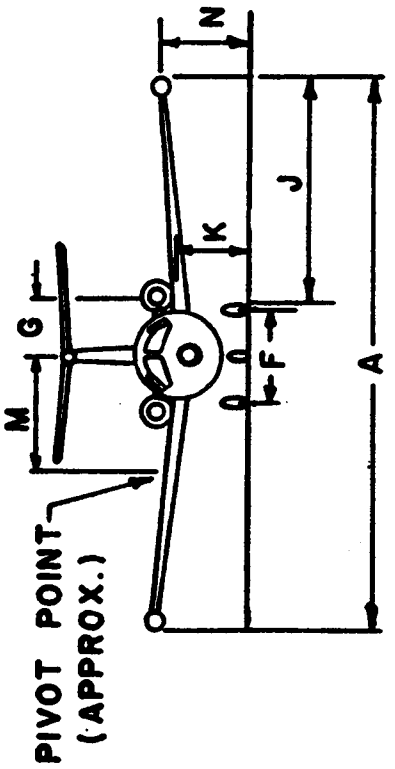

Figure A12-58. Hamburger-Flugzeubau HFB-320 Hansa

MODEL	MAXIMUM TAKEOFF WEIGHT	MAXIMUM LANDING WEIGHT	A	B	C	D	F	NUMBER SEATS	TURN RADIUS
DH.104	8,950 LB 4 060 KG	8,500 LB 3 856 KG	57'0" 17.61M	39'3" 11.97M	13'4" 4.07M		13'8" 4.17M	9	35'4" 10.83M

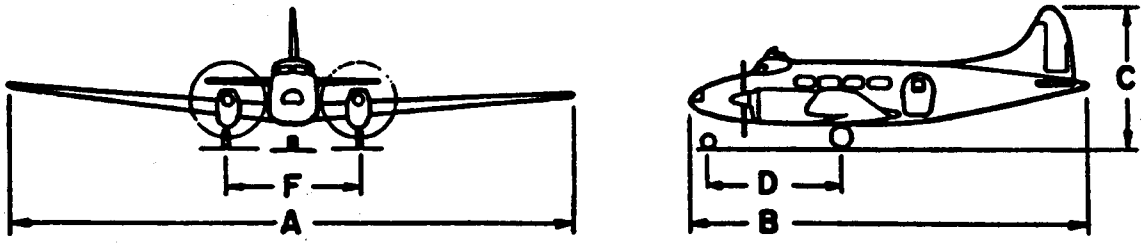

Figure A12-59. Hawker Siddeley DH. 104 Dove

MODEL	MAXIMUM TAKEOFF WEIGHT	MAXIMUM LANDING WEIGHT	A	B	C	D	E	F	G	H	J	K	L	M	N	TURN RADIUS
DH.114	13,500 LB 6 123 KG	13,150 LB 5 965 KG	71'6" 21.79M	48'6" 14.78M	15'7" 4.75M	14'5" 4.39M		16'8" 5.14M			15'0" 4.57M					

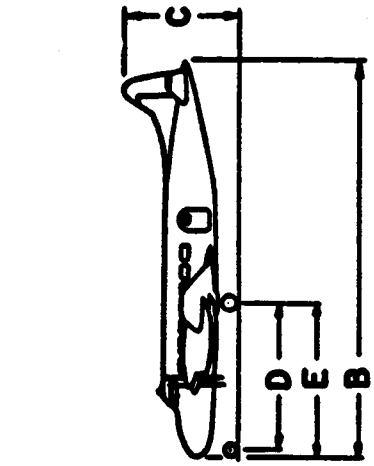

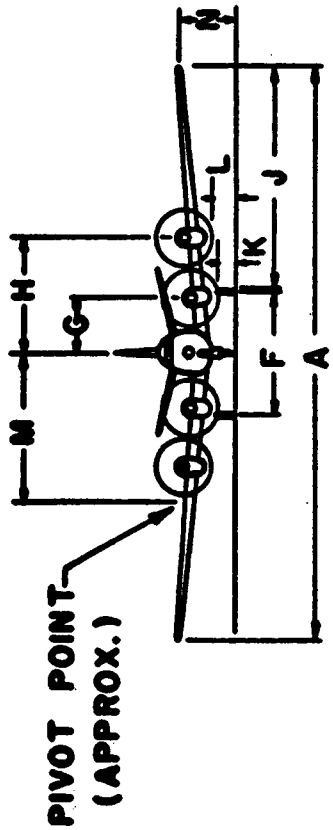

Figure A12-60. Hawker Siddeley DH. 114 Heron

MODEL	MAXIMUM TAKEOFF WEIGHT	MAXIMUM LANDING WEIGHT	A	B	C	D	E	F	G	J	K	M	N	TURN RADIUS
400A	23,300 LB 10 569 KG	20,000 LB 9 072 KG	47'0" 14.33M	47'5" 14.45M	16'6" 5.08M	18'9" 5.72M	26'3" 8.00M	9'2" 2.79M	4'2" 1.27M	18'7" 5.66M	4'9" 1.45M	19'0" 5.79M	4'4" 1.32M	43'0" 13.11M
600A	25,000 LB 11 340 KG	22,000 LB 9 979 KG	47'0" 14.33M	50'6" 15.39M	17'3" 5.26M									
700A	24,200 LB 10 977 KG	22,000 LB 9 979 KG	47'0" 14.33M	50'8" 15.44M	17'7" 5.36M									
800A	27,400 LB 12 428 KG	23,350 LB 10 591 KG	51'5" 15.67M	51'2" 15.60M	17'6" 5.33M									

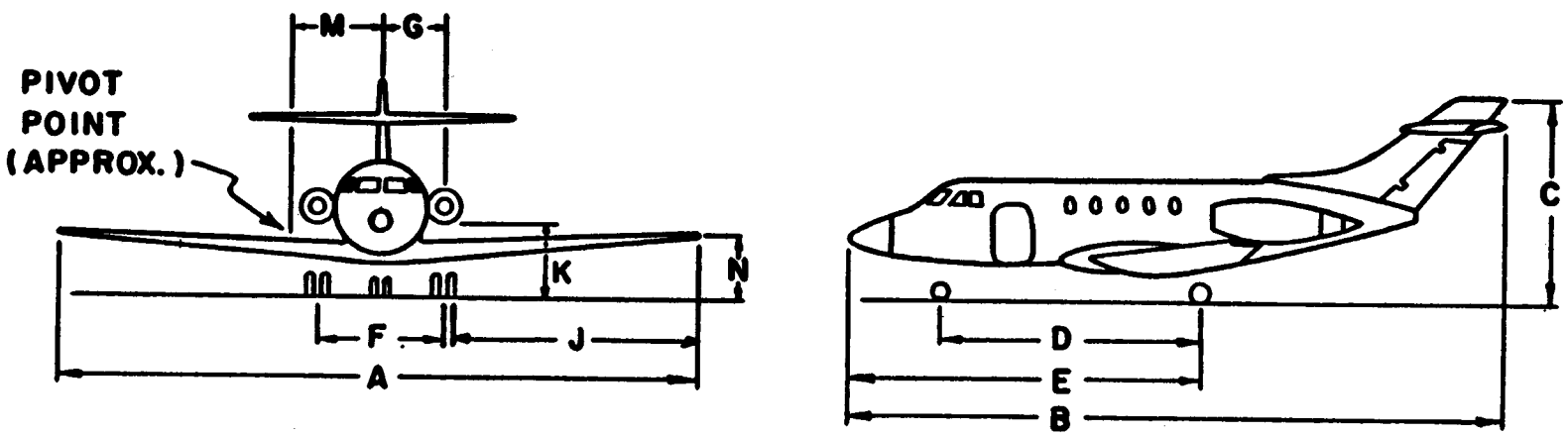

Figure A12-61. Hawker Siddeley HS-125

MODEL	MAXIMUM TAKEOFF WEIGHT	MAXIMUM LANDING WEIGHT	A	B	C	D	E	F	G	J	K	M	N	TURN RADIUS
2A	44,490 LB 20 180 KG	42,100 LB 19 096 KG	98'6" 30.02M	67'0" 20.49M	24'10" 7.63M	20'8" 6.32M		24'9" 7.60M		35'11" 10.95M	2'0" 0.61M			59'0" 17.98M
2B	46,500 LB 21 092 KG		102'6" 31.24M	67'0" 20.49M	24'10" 7.63M									

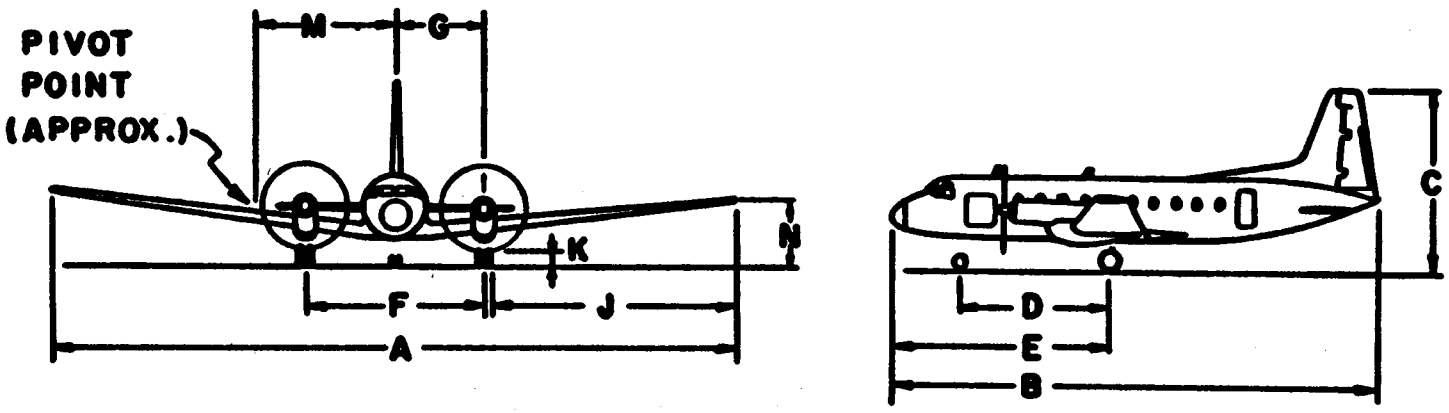

Figure A12-62. Hawker Siddeley HS-748

MODEL	MAXIMUM TAKEOFF WEIGHT	MAXIMUM LANDING WEIGHT	A	B	C	D	E	F	G	H	J	K	L	M	N	TURN RADIUS
Il-62	357,000 LB 161 932 KG	252,000 LB 114 305 KG	141'9" 43.20M	174'4" 53.13M	40'6" 12.34M	80'5" 24.57M		22'4" 6.80M			58'0" 17.76M					

NOTE: OPTIONAL TAKEOFF WEIGHT 367,760 LB (166 813 KG).

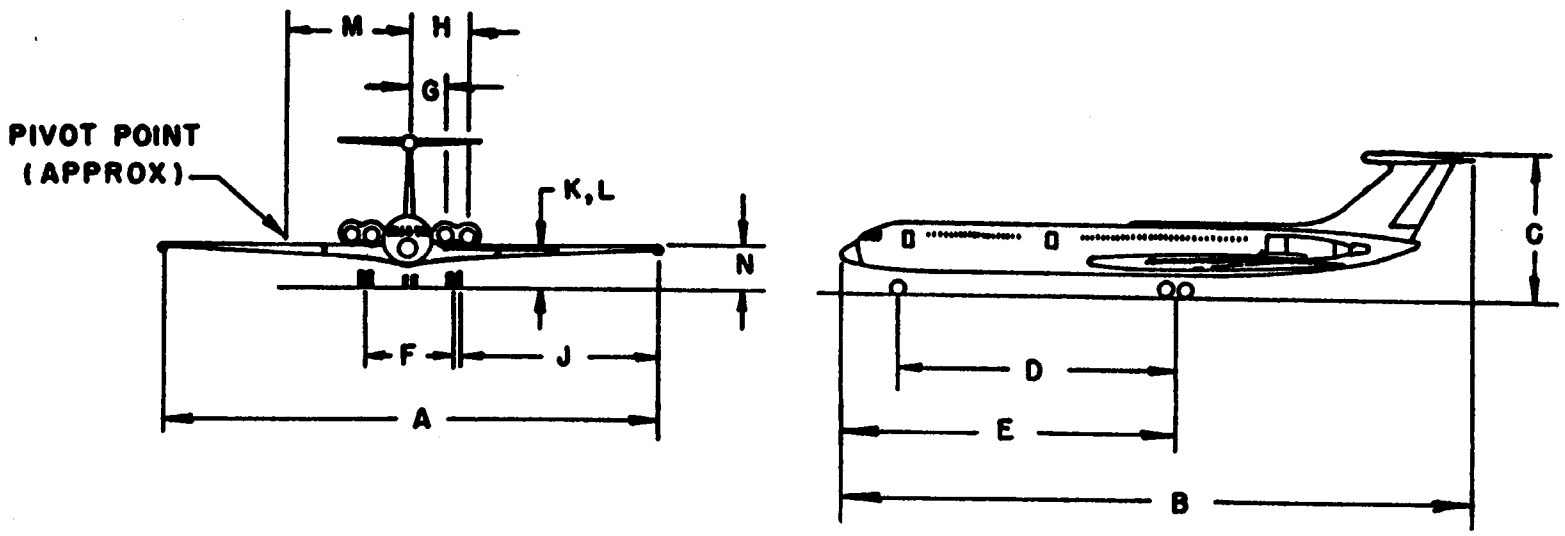

Figure A12-63. Ilyushin IL-62

MODEL	MAXIMUM TAKEOFF WEIGHT	MAXIMUM LANDING WEIGHT	A	B	C	D	E	F	G	J	K	M	N	TURN RADIUS
1121	16,800 LB	16,000 LB	43'4"	50'5"	15'9"	23'9"		11'2"	3'4"	15'9"	5'2"	23'8"	4'11"	45'5"
	7 620 KG	7 257 KG	13.21M	15.37M	4.80M	7.24M		3.40M	1.02M	4.80M	1.60M	7.21M	1.50M	13.84M
1123	20,500 LB	19,000 LB	43'4"	52'3"	15'9"	23'9"		12'0"	3'4"	15'9"	5'2"			
	9 299 KG	8 618 KG	13.21M	15.93M	4.80M	7.24M		3.66M	1.02M	4.80M	1.60M			
1124	22,850 LB	19,000 LB	44'10"	52'3"	15'10"	25'7"	28'5"	11'0"	4'2"	16'10"	4'3"		4'0"	
	10 365 KG	8 618 KG	13.67M	15.93M	4.83M	7.80M	8.66M	3.35M	1.27M	5.13M	1.30M		1.22M	
1124A	23,500 LB	19,000 LB	44'10"	52'3"	15'10"	25'7"	28'5"	11'0"	4'2"	16'10"	4'3"		4'0"	
	10 659 KG	8 618 KG	13.67M	15.93M	4.83M	7.80M	8.66M	3.35M	1.27M	5.13M	1.30M		1.22M	
1125	23,500 LB	20,700 LB	52'8"	55'7"	18'2"	24'1"	30'9"	9'1"	4'4"	21'1"	7'0"		3'10"	
	10 659 KG	9 389 KG	16.05M	16.94M	5.54M	7.34M	9.37M	2.77M	1.32M	6.43M	2.13M		1.17M	

NOTE: MODEL 1121 FORMERLY PRODUCED BY NORTH AMERICAN ROCKWELL AS "JET COMMANDER."

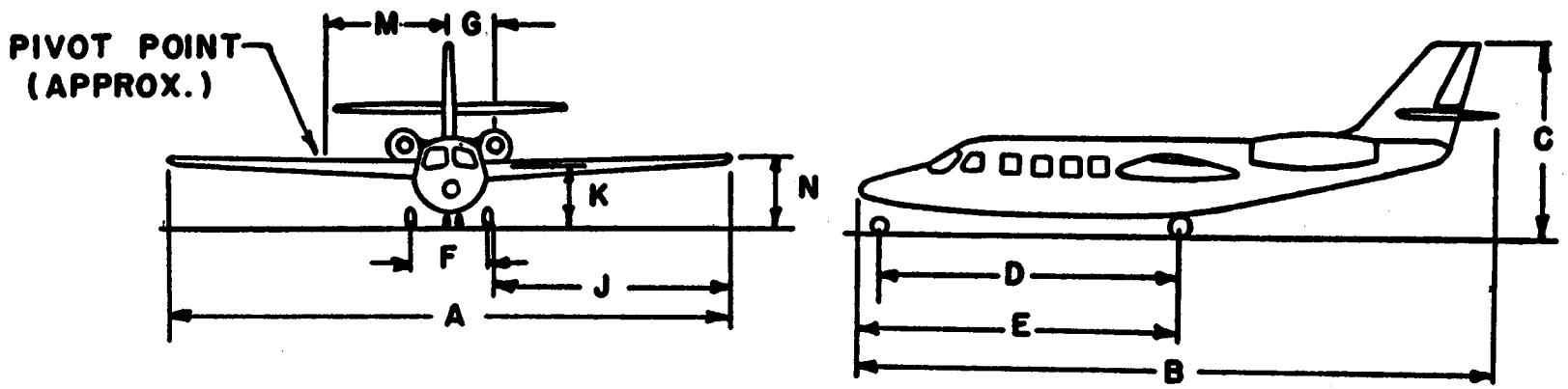

Figure A12-64. Israel Aircraft Industries Westwind

MODEL	MAXIMUM TAKEOFF WEIGHT	MAXIMUM LANDING WEIGHT	A	B	C	D	E	F	G	H	J	K	L	M	N	TURN RADIUS
749A	107,000 LB 48 534 KG	89,500 LB 40 597 KG	123'0" 37.49M	95'2" 29.01M	22'5" 6.83M	33'0" 10.06M	39'3" 11.96M	28'0" 8.53M	14'0" 4.27M	29'10" 9.09M	45'5" 13.84M	1'9" 0.53M	3'11" 1.19M	31'1" 9.47M	15'11" 4.85M	92'7" 28.22M
1049	120,000 LB 54 431 KG	101,500 LB 46 040 KG	123'0" 37.49M	113'7" 34.62M	24'10" 7.57M	43'7" 13.28M	49'11" 15.21M	28'0" 8.53M	14'0" 4.27M	29'10" 9.09M	45'5" 13.84M	1'9" 0.53M	3'11" 1.19M	26'0" 7.92M	16'3" 4.95M	87'6" 20.07M
1649A	160,000 LB 72 575 KG	123,000 LB 55 792 KG	150'0" 45.72M	116'2" 35.41M	23'5" 7.14M	45'7" 13.89M	54'4" 16.56M	38'5" 11.71M	19'2" 5.84M	37'4" 11.38M	53'10" 16.41M	1'5" 0.44M	3'7" 1.09M	28'4" 8.64M	16'11" 5.16M	103'5" 32.13M

NOTE: MODEL 1049C HAS MAXIMUM (TAKEOFF) WEIGHT OF 137,500 LB (62 369 KG).
(LANDING) 113,000 LB (51 256 KG).

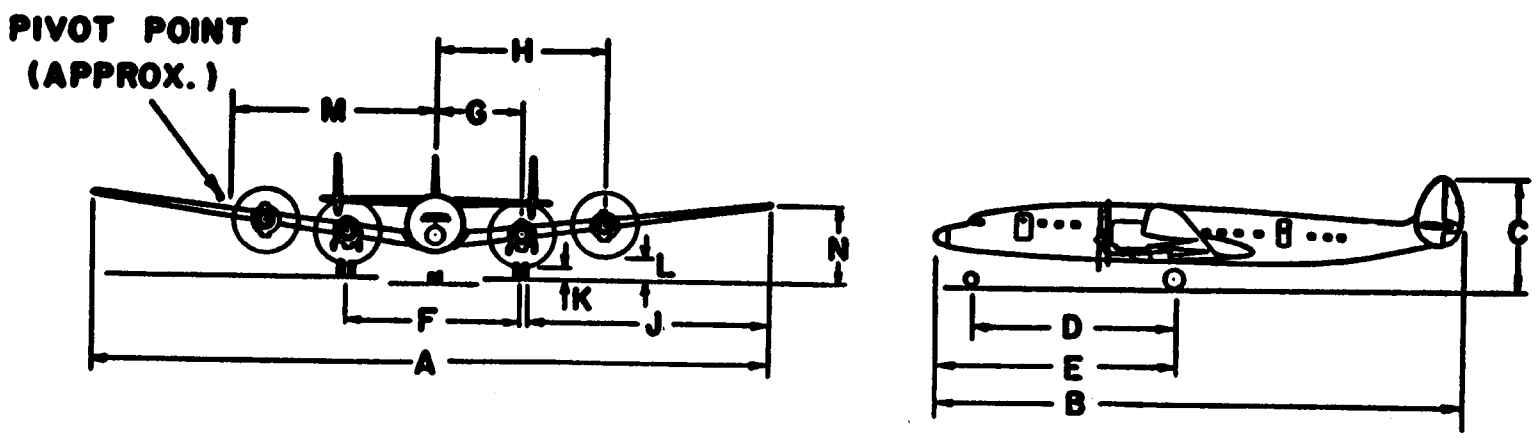

Figure A12-65. Lockheed Constellation and Super Constellation

MODEL	MAXIMUM TAKEOFF WEIGHT	MAXIMUM LANDING WEIGHT	A	B	C	D	E	F	G	H	J	K	L	M	N	TURN RADIUS
C-5B	769,000 LB 348 813 KG	635,850 LB 288 417 KG	222'8" 67.87M	247'10" 75.54M	65'1" 19.84M	82'1" 25.02M	116'11" 35.64M	37'5" 11.40M	39'8" 12.09M	61'11" 18.87M	92'8" 28.25M	10'9" 3.28M	7'11" 2.41M	38'4" 11.68M	13'7" 4.14M	162'6" 49.53M

NOTE: OPTIONAL TAKEOFF WEIGHT 837,000 LB (379 657 KG).

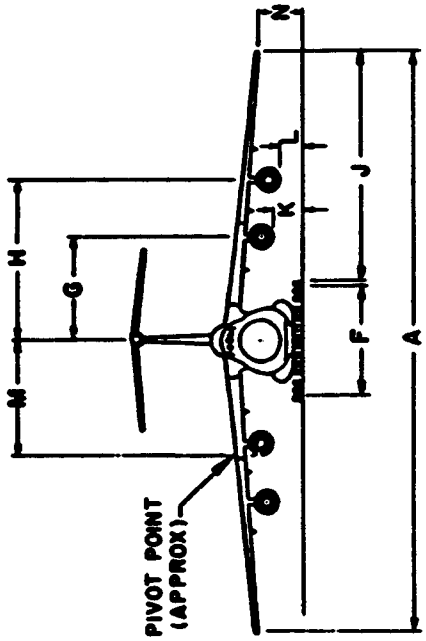

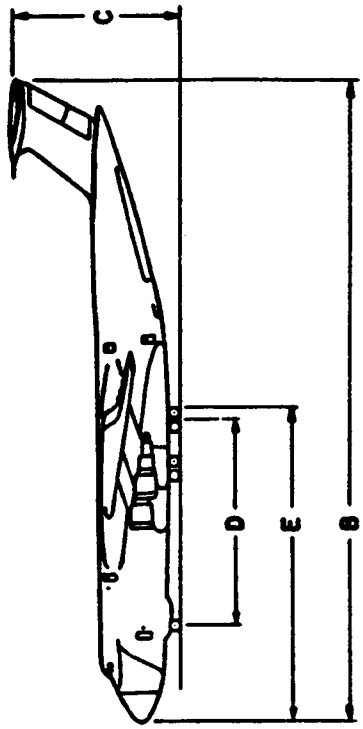

Figure A12-66. Lockheed C-5B Galaxy

MODEL	MAXIMUM TAKEOFF WEIGHT	MAXIMUM LANDING WEIGHT	A	B	C	D	E	F	G	H	J	K	L	M	N	TURN RADIUS
C-141A	316,600 LB 143 607 KG	316,100 LB 143 381 KG	159'11" 48.74M	145'0" 44.19M	39'4" 11.99M	55'0" 16.76M	60'7" 18.46M	17'6" 5.34M	23'9" 7.24M	38'4" 11.68M	70'0" 21.34M	3'11" 1.19M	3'4" 1.01M	10'0" 3.05M	6'0" 1.83M	92'0" 28.04M
C-141B	343,000 LB 155 582 KG		159'11" 48.74M	168'4" 51.31M	39'4" 11.99M											

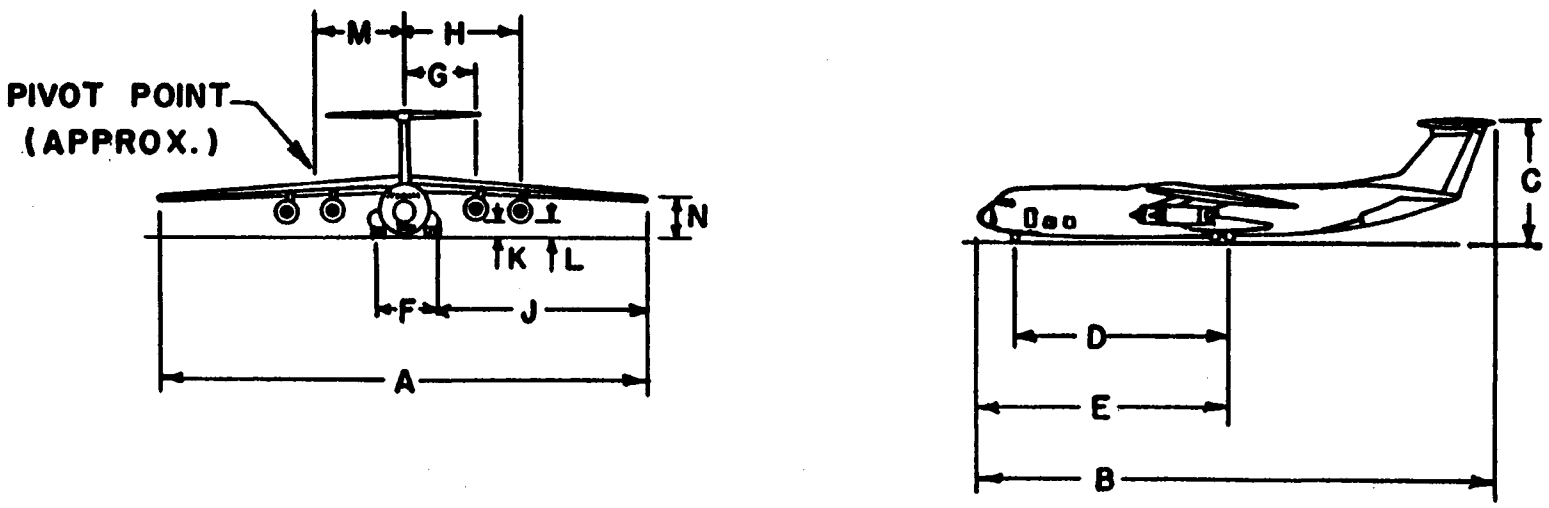

Figure A12-67. Lockheed C-141 Starlifter

MODEL	MAXIMUM TAKEOFF WEIGHT	MAXIMUM LANDING WEIGHT	A	B	C	D	E	F	G	H	J	K	L	M	N	TURN RADIUS
L-188	116,000 LB 52 617 KG	95,650 LB 43 386 KG	99'0" 29'91M	104'7" 31.88M	33'8" 10.26M	37'0" 11.27M	48'3" 14.71M	31'2" 9.50M	15'7" 4.75M	29'9" 9.07M	37'9" 9.98M	1'3" 0.33M	2'6" 0.76M	15'7" 4.75M	10'11" 3.33M	65'1" 19.84M

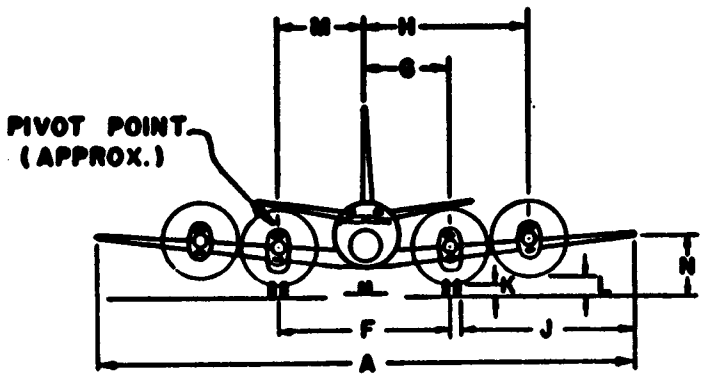

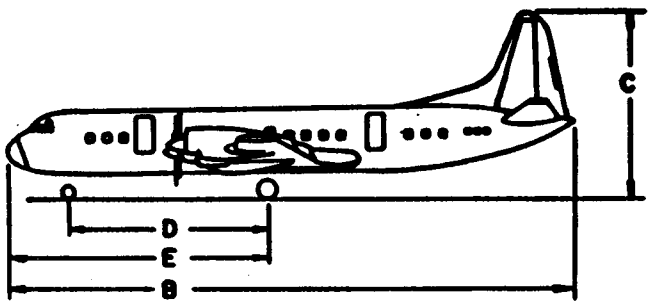

Figure A12-68. Lockheed L-188 Electra II

MODEL	MAXIMUM TAKEOFF WEIGHT	MAXIMUM LANDING WEIGHT	A	B	C	D	E	F	G	H	J	K	L	M	N	TURN RADIUS
L-100-20	155,000 LB 70 307 KG	130,000 LB 58 967 KG	132'7" 40.41M	106'1" 32.33M	39'4" 11.98M	37'1" 11.30M	48'7" 14.80M	14'3" 4.34M	16'9" 5.11M	33'4" 10.16M	57'5" 17.50M	5'11" 1.80M	6'11" 2.11M	12'0" 3.65M	15'4" 4.67M	88'0" 26.82M
L-100-30	155,000 LB 70 307 KG	135,000 LB 61 235 KG	132'7" 40.41M	112'9" 34.36M	39'2" 11.93M	40'5" 12.31M	51'11" 15.81M	14'3" 4.34M	16'9" 5.11M	33'4" 10.16M	57'5" 17.50M	5'11" 1.80M	6'11" 2.11M	14'0" 4.27M	15'3" 4.64M	90'0" 27.43M
C-130H	175,000 LB 79 379 KG	155,000 LB 70 307 KG	132'7" 40.41M	97'9" 29.79M	39'5" 12.01M	32'1" 9.78M	43'7" 13.28M	14'3" 4.34M	16'9" 5.11M	33'4" 10.16M	58'4" 17.78M	5'8" 1.73M			13'8" 4.17M	85'0" 25.91M

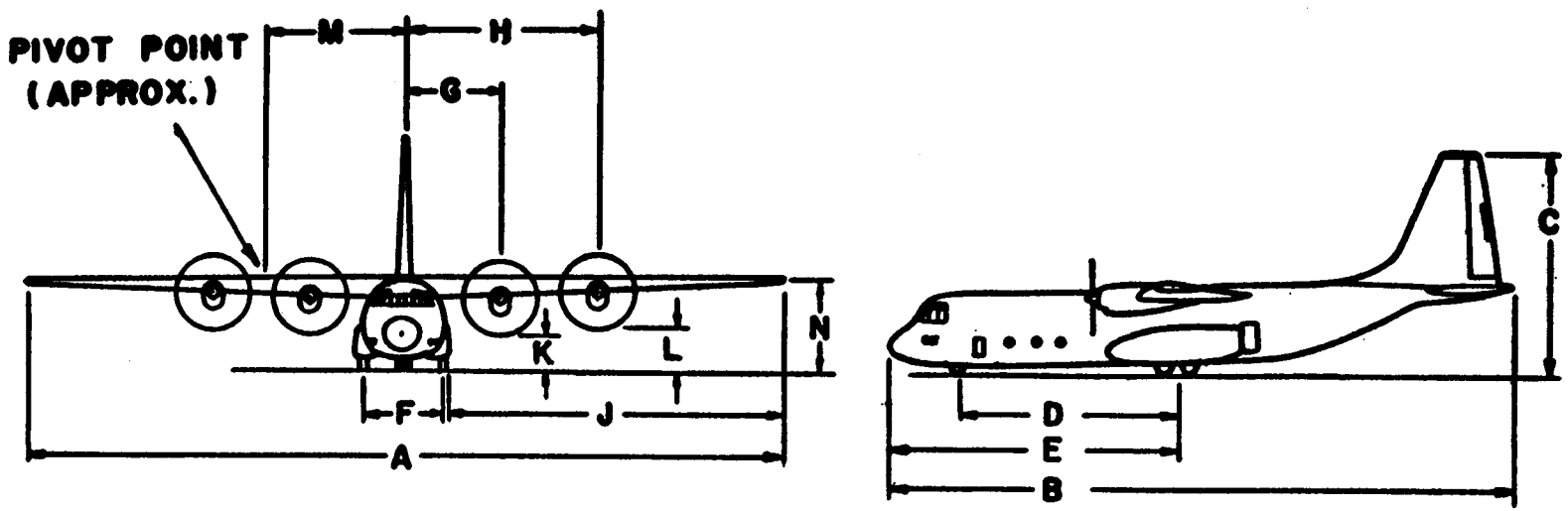

Figure A12-69. Lockheed L-100 Hercules

MODEL	MAXIMUM TAKEOFF WEIGHT	MAXIMUM LANDING WEIGHT	A	B	C	D	E	F	G	J	K	M	N	P	TURN RADIUS
1	430,000 LB	358,000 LB	155'4"	177'8"	55'10"	70'0"	99'9"	36'0"	34'10"	56'8"	2'11"	38'10"	16'1"	18'9"	121'3"
	195 045 KG	162 386 KG	47.35M	54.15M	17.02M	21.34M	30.40M	10.97M	10.62M	17.27M	0.89M	11.84M	4.90M	5.72M	36.96M
100	466,000 LB	368,000 LB	155'4"	177'8"	55'10"	70'0"	99'9"	36'0"	34'10"	56'8"	2'11"	38'10"	16'1"	18'9"	121'3"
	211 374 KG	166 922 KG	47.35M	54.15M	17.02M	21.34M	30.40M	10.97M	10.62M	17.27M	0.89M	11.84M	4.90M	5.72M	36.96M
200	466,000 LB	368,000 LB	155'4"	177'8"	55'10"	70'0"	99'9"	36'0"	34'10"	56'8"	2'11"	38'10"	16'1"	18'9"	121'3"
	211 374 KG	166 922 KG	47.35M	54.15M	17.02M	21.34M	30.40M	10.97M	10.62M	17.27M	0.89M	11.84M	4.90M	5.72M	36.96M
500	496 000 LB	368,000 LB	155'4"	164'2"	55'10"	61'8"	91'5"	36'0"	34'10"	56'8"	2'11"	34'0"	16'10"	20'0"	116'10"
	224 982 KG	166 922 KG	47.35M	50.04M	17.02M	18.80M	27.86M	10.97M	10.62M	17.27M	0.89M	10.36M	5.13M	6.10M	35.61M
500	496,000 LB	368,000 LB	164'4"	164'2"	55'10"	61'8"	91'5"	36'0"	34'10"	61'2"	2'11"	34'0"	16'10"	20'0"	122'0"
EX. WING	224 982 KG	166 922 KG	50.09M	50.04M	17.02M	18.80M	27.86M	10.97M	10.62M	18.64M	0.89M	10.36M	5.13M	6.10M	37.19M

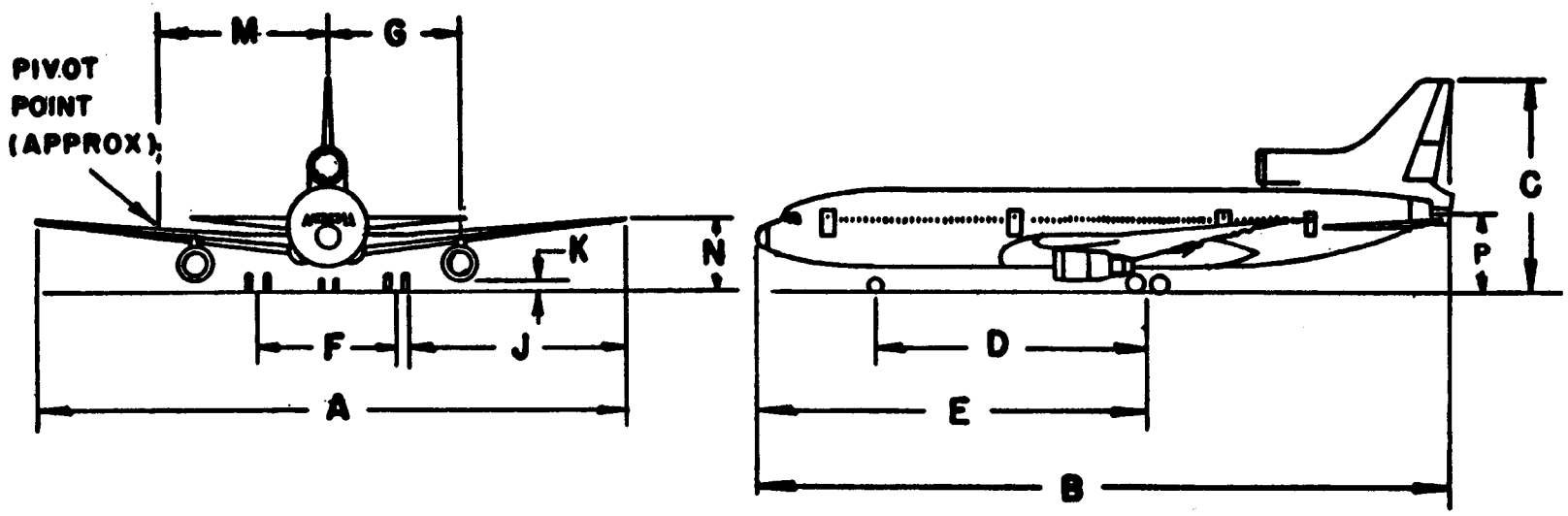

Figure A12-70. Lockheed L-1011 Tristar

MODEL	MAXIMUM TAKEOFF WEIGHT	MAXIMUM LANDING WEIGHT	A	B	C	D	E	F	G	H	J	K	L	M	N	TURN RADIUS
1329	42,000 LB 19 501 KG	35,000 LB 15 876 KG	54'5" 16.29M	60'5" 18.42M	20'5" 6.22M	20'7" 6.28M	34'11" 10.65M	12'4" 3.76M	5'7" 1.71M	7'11" 2.42M	19'4" 5.90M	5'2" 1.60M	5'2" 1.60M	7'2" 2.19M	4'5" 1.34M	43'4" 13.21M

JETSTAR II HAS OPTIONAL MAXIMUM (TAKEOFF) WEIGHT OF 43,750 LB (19 845 KG).
(LANDING) 36,000 LB (16 329 KG).

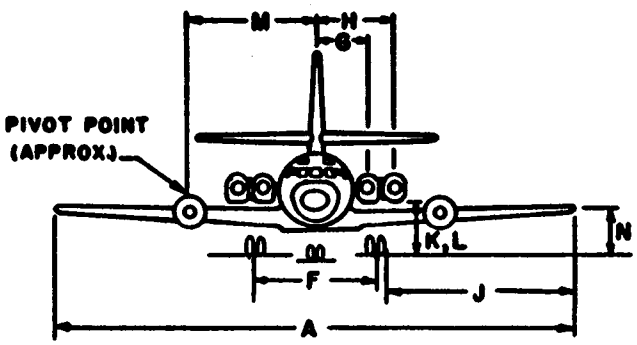

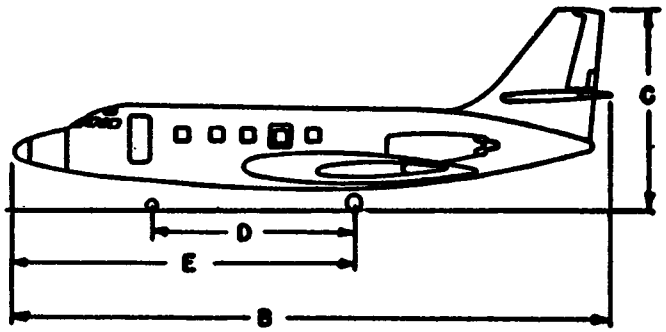

Figure A12-71. Lockheed L-1329 Jetstar

MODEL	MAXIMUM TAKEOFF WEIGHT	MAXIMUM LANDING WEIGHT	A	B	C	D	E	F	G	J	K	M	N	TURN RADIUS
404	44,900 LB 20 366 KG	43,000 LB 19 504 KG	93'4" 28.45M	74'7" 22.73M	28'8" 8.24M	22'5" 6.83M	32'3" 9.83M	25'0" 7.62M	12'6" 3.81M	32'8" 9.96M	0'11" 0.28M	12'6" 3.81M	12'6" 3.81M	59'2" 18.03M

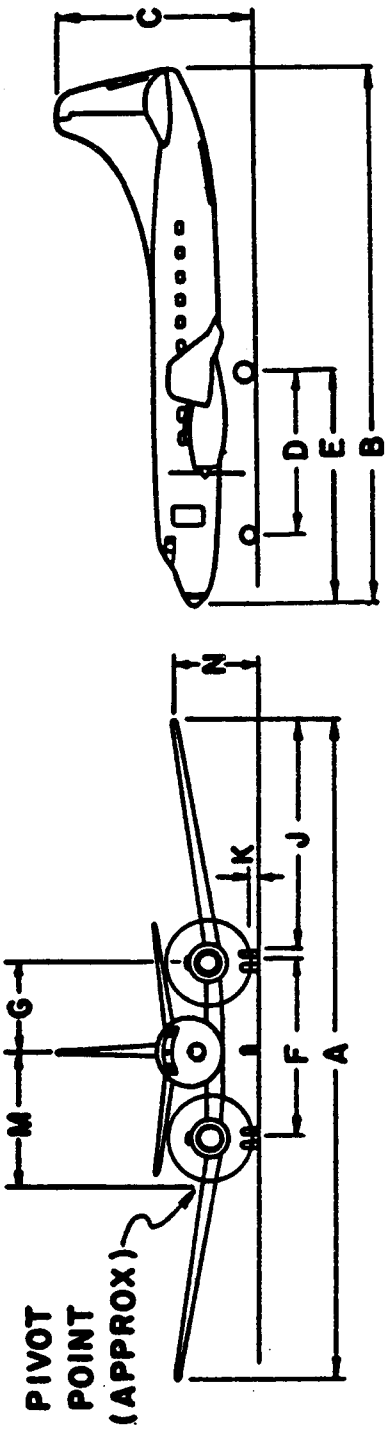

Figure A12-72. Martin 404

MODEL	MAXIMUM TAKEOFF WEIGHT	MAXIMUM LANDING WEIGHT	A	B	C	D	E	F	G	H	J	K	L	M	N	TURN RADIUS
20, 30,	315,000 LB	207,000 LB	142'5"	150'9"	43'4"	57'6"	73'5"	20'10"	25'9"	44'7"	58'10"	4'0"	5'5"	21'1"	15'3"	96'10"
40	142 884 KG	93 895 KG	43.41M	45.95M	13.21M	17.53M	22.38M	6.35M	7.85M	13.59M	17.93M	1.22M	1.63M	6.43M	4.65M	29.51M
55	325,000 LB	217,000 LB	142'5"	150'9"	43'4"	57'6"	73'5"	20'10"	25'9"	44'7"	58'10"	3'1"	4'7"	21'1"	15'3"	96'10"
	147 420 KG	98 431 KG	43.41M	45.95M	13.21M	17.53M	22.38M	6.35M	7.85M	13.59M	17.93M	0.94M	1.40M	6.43M	4.65M	29.51M
55F	325,000 LB	240,000 LB	142'5"	150'9"	43'4"	57'6"	73'5"	20'10"	25'9"	44'7"	58'10"	3'1"	4'7"	21'1"	15'3"	96'10"
	147 420 KG	108 864 KG	43.41M	45.95M	13.21M	17.53M	22.38M	6.35"	7.85M	13.59M	17.93M	0.94M	1.40M	6.43M	4.65M	29.51M
61	325,000 LB	240,000 LB	142'5"	187'5"	43'0"	77'6"	93'5"	20'10"	25'9"	44'7"	58'10"	3'3"	4'7"	27'0"	15'1"	106'11"
71	147 420 KG	108 864 KG	43.41M	57.12M	13.11M	23.62M	28.47M	6.35M	7.85M	13.59M	17.93M	0.99M	1.40M	8.23M	4.60M	32.59M
61F	328,000 LB	258,000 LB	142'5"	187'5"	43'0"	77'6"	93'5"	20'10"	25'9"	44'7"	58'10"	3'3"	4'7"	27'0"	15'1"	106'11"
71CF	148 781 KG	117 029 KG	43.41M	57.12M	13.11M	23.62M	28.47M	6.35M	7.85M	13.59M	17.93M	0.99M	1.40M	8.23M	4.60M	32.59M
62, 72,	350,000 LB	240,000 LB	148'5"	157'6"	43'5"	60'10"	76'9"	20'10"	25'9"	44'7"	61'8"	2'7"	4'2"	39'4"	15'6"	116'5"
72AF	158 760 KG	108 864 KG	45.24M	48.00M	13.23M	18.54M	23.39M	6.35M	7.85M	13.59M	18.80M	0.79M	1.27M	11.99M	4.72M	35.48M
62F	350,000 LB	250,000 LB	148'5"	157'6"	43'5"	60'10"	76'9"	20'10"	25'9"	44'7"	61'8"	2'7"	4'2"	39'4"	15'6"	116'5"
72CF	158 760 KG	113 400 KG	45.24M	48.00M	13.23M	18.54M	23.39M	6.35M	7.85M	13.59M	18.80M	0.79M	1.27M	11.99M	4.72M	35.48M
63	355,000 LB	258,000 LB	148'5"	187'5"	43'0"	77'6"	93'5"	20'10"	25'9"	44'7"	61'8"	2'7"	4'2"	38'10"	15'4"	116'1"
73	161 028 KG	117 029 KG	45.24M	57.12M	13.11M	23.62M	28.47M	6.35M	7.85M	13.59M	18.80M	0.79M	1.27M	11.84M	4.67M	35.38M
63F, 73CF	355,000 LB	275.000 LB	148'5"	187'5"	43'0"	77'6"	93'5"	20'10"	25'9"	44'7"	61'8"	2'7"	4'2"	38'10M	15'4"	116'1"
73AF	161 028 KG	124 740 KG	45.24M	57.12M	13.11M	23.62M	28.47M	6.35M	7.85M	13.59M	18.80M	0.79M	1.27M	11.84M	4.67M	35.38M

NOTE: OPTIONAL TAKEOFF AND LANDING WEIGHTS:

72 335,000 LB (151 953 KG) MAXIMUM TAKEOFF WEIGHT.
240,000 LB (108 864 KG) MAXIMUM LANDING WEIGHT.

72AF 335,000 LB (151 953 KG) MAXIMUM TAKEOFF WEIGHT.
250,000 LB (113 400 KG) MAXIMUM LANDING WEIGHT.

NOTE: REDUCE NACELLE CLEARANCE DIMENSION (K AND L) BY 10 INCHES (0.25M) FOR DC-8-70 SERIES AIRCRAFT.

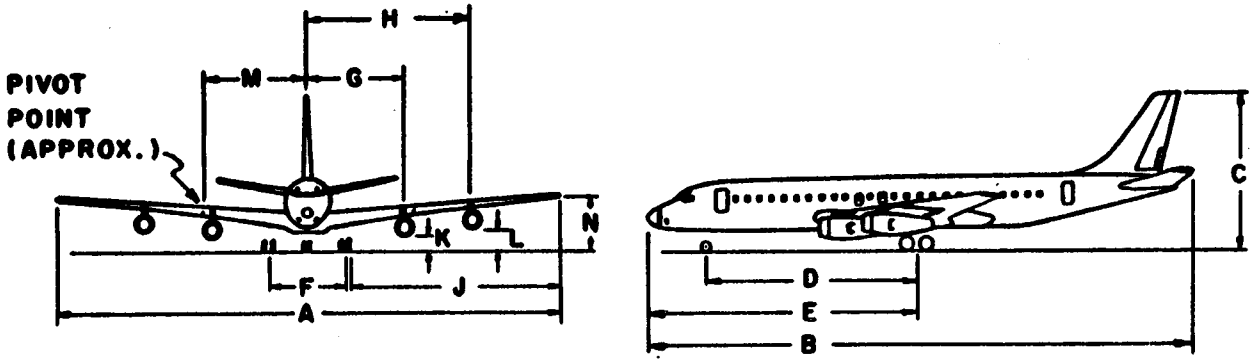

Figure A12-73. McDonnell-Douglas DC-8

MODEL	MAXIMUM TAKEOFF WEIGHT	MAXIMUM LANDING WEIGHT	A	B	C	D	E	F	G	J	K	M	N	TURN RADIUS
15	90,700 LB 41 141 KG	81,700 LB 37 058 KG	89'5" 27.25M	104'5" 31.83M	27'7" 8.41M	43'8" 13.31M	51'4" 15.64M	16'4" 4.98M	8'11" 2.72M	35'0" 10.67M	6'5" 1.96M	8'6" 2.59M	7'2" 2.18M	59'7" 18.16M
15F	90,700 LB 41 141 KG	81,700 LB 37 058 KG	89'5" 27.25M	104'5" 31.83M	27'7" 8.41M	43'8" 13.31M	51'4" 15.64M	16'4" 4.98M	8'11" 2.72M	35'0" 10.67M	6'5" 1.96M	8'6" 2.59M	7'2" 2.18M	59'7" 18.16M
21	98,000 LB 44 452 KG	95,300 LB 43 227 KG	93'4" 28.45M	104'5" 31.83M	27'5" 8.36M	43'8" 13.31M	51'4" 15.64M	16'4" 4.98M	8'11" 2.72M	36'10" 11.23M	6'5" 1.96M	8'6" 2.59M	7'3" 2.21M	59'6" 18.14M
32	110,000 LB 49 895 KG	99,000 LB 44 906 KG	93'4" 28.45M	119'4" 36.37M	27'9" 8.46M	53'2" 16.21M	60'9" 18.52M	16'4" 4.98M	8'11" 2.72M	36'10" 11.23M	6'5" 1.96M	10'4" 3.15M	7'3" 2.21M	65'2" 19.86M
33F	110,000 LB 49 895 KG	99,000 LB 44 906 KG	93'4" 28.45M	119'4" 36.37M	27'9" 8.46M	53'2" 16.21M	60'9" 18.52M	16'4" 4.98M	8'11" 2.72M	36'10" 11.23M	6'5" 1.96M	10'4" 3.15M	7'3" 2.21M	65'2" 19.86M
41	114,000 LB 51 710 KG	102,000 LB 46 266 KG	93'4" 28.45M	125'7" 38.28M	28'5" 8.66M	56'2" 17.12M	63'8" 19.41M	16'0" 4.88M	8'11" 2.72M	37'0" 11.28M	6'11" 2.11M	10'11" 3.33M	7'2" 2.18M	68'6" 20.88M
51	121,000 LB 54 885 KG	110,000 LB 49 895 KG	93'4" 28.45M	133'7" 40.72M	28'9" 8.76M	60'11" 18.57M	68'6" 20.88M	16'0" 4.88M	8'11" 2.72M	37'0" 11.28M	6'10" 2.08M	11'10" 3.61M	7'1" 2.16M	71'10" 21.89M
81,82, 83,88	SEE NOTE	SEE NOTE	107'10" 32.87M	147'10" 45.06M	30'3" 9.22M	72'5" 22.07M	80'0" 24.38M	16'8" 5.08M	8'11" 2.72M	43'9" 13.34M	7'6" 2.29M	14'0" 4.27M	8'7" 2.62M	81'2" 24.74M
87	SEE NOTE	SEE NOTE	107'10" 32.87M	130'5" 39.75M	31'2" 9.50M	62'11" 19.18M	70'6" 21.49M	16'8" 5.08M	8'11" 2.72M	43'9" 13.34M	7'6" 2.29M	12'2" 3.71M	8'8" 2.64M	71'7" 21.82M

NOTE: TAKEOFF AND LANDING WEIGHTS:

81 140,000 LB (63 503 KG) MAXIMUM TAKEOFF WEIGHT.
128,000 LB (58 060 KG) MAXIMUM LANDING WEIGHT.

82 149,500 LB (67 812 KG) MAXIMUM TAKEOFF WEIGHT.
130,000 LB (58 967 KG) MAXIMUM LANDING WEIGHT.

83 160,000 LB (72 575 KG) MAXIMUM TAKEOFF WEIGHT.
139,500 LB (63 276 KG) MAXIMUM LANDING WEIGHT.

88 149,500 LB (67 812 KG) MAXIMUM TAKEOFF WEIGHT.
130,000 LB (58 967 KG) MAXIMUM LANDING WEIGHT.

87 149,500 LB (67 812 KG) MAXIMUM TAKEOFF WEIGHT.
130,000 LB (58 967 KG) MAXIMUM LANDING WEIGHT.

87 140,000 LB (63 503 KG) MAXIMUM TAKEOFF WEIGHT.
128,000 LB (56 060 KG) MAXIMUM LANDING WEIGHT.

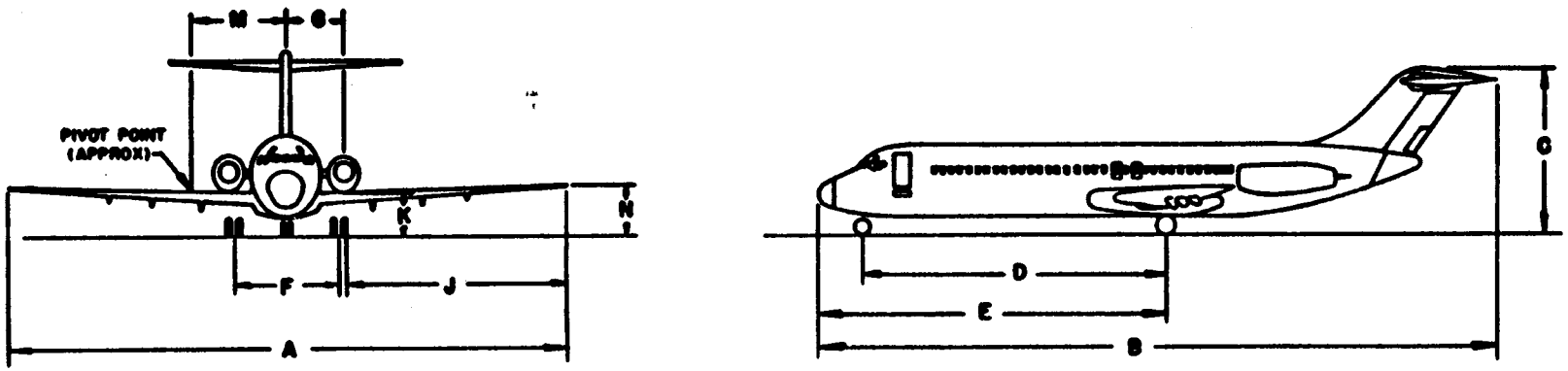

Figure A12-74. McDonnell-Douglas DC-9 and MD-80

MODEL	MAXIMUM TAKEOFF WEIGHT	MAXIMUM LANDING WEIGHT	A	B	C	D	E	F	G	J	K	M	N	P	TURN RADIUS
10	443,000 LB	363,500 LB	155'4"	182'3"	58'5"	72'5"	100'4"	35'0"	26'10"	57'1"	2'9"	39'0"	14'5"	29'7"	121'8"
	200 941 KG	164 881 KG	47.35M	55.55M	17.81M	22.07M	30.58M	10.67M	8.18M	17.40M	0.84M	11.89M	4.32M	9.02M	37.08M
30	590,000 LB	411,000 LB	165'4"	181'7"	58'7"	72'5"	100'4"	35'0"	26'10"	62'1"	2'10"	37'2"	14'4"	29'6"	125'4"
	267 620 KG	186 426 KG	50.39M	55.35M	17.86M	22.07M	30.58M	10.67M	8.18M	18.92M	0.86M	11.33M	4.37M	8.99M	38.20M
40	555,000 LB	403,000 LB	165'4"	182'3"	58'7"	72'5"	100'4"	35'0"	26'10"	62'1"	2'10"	37'2"	14'4"	29'6"	125'4"
	251 744 KG	182 798 KG	50.39M	55.55M	17.86M	22.07M	30.58M	10.67M	8.18M	18.92M	0.86M	11.33M	4.37M	8.99M	38.20M
KC-10A	590,000 LB	436,000 LB	165'4"	181'7"	58'7"	72'5"	100'4"	35'0"	26'10"	62'1"	2'10"	37'2"	14'4"	29'6"	125'4"
	267 620 KG	197 766 KG	50.39M	55.35M	17.86M	22.07M	30.58M	10.67M	8.18M	18.92M	0.86M	11.33M	4.37M	8.99M	38.20M

NOTE: TAKEOFF AND LANDING WEIGHTS:

10CF 440,000 LB (199 581 KG) MAXIMUM TAKEOFF WEIGHT.
363,500 LB (164 881 KG) MAXIMUM LANDING WEIGHT.

15 455,000 LB (206 384 KG) MAXIMUM TAKEOFF WEIGHT.
363,500 LB (164 881 KG) MAXIMUM LANDING WEIGHT.

30CF 580,000 LB (263 084 KG) MAXIMUM TAKEOFF WEIGHT.
436,000 LB (197 766 KG) MAXIMUM LANDING WEIGHT.

40CF 555,000 LB (251 744 KG) MAXIMUM TAKEOFF WEIGHT.
411,000 LB (186 426 KG) MAXIMUM LANDING WEIGHT.

DC-10-10CF HAS SAME DIMENSIONS AS MODEL 10.
DC-10-15 HAS SAME DIMENSIONS AS MODEL 10.
DC-10-30CF HAS SAME DIMENSIONS AS MODEL 30.

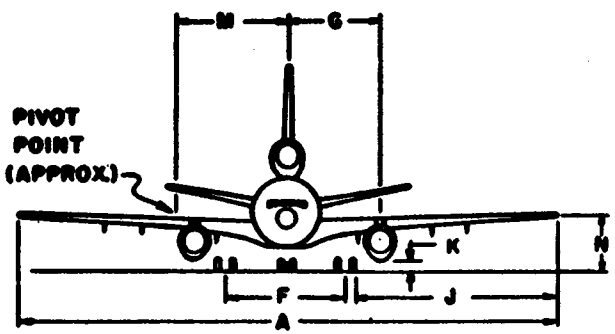

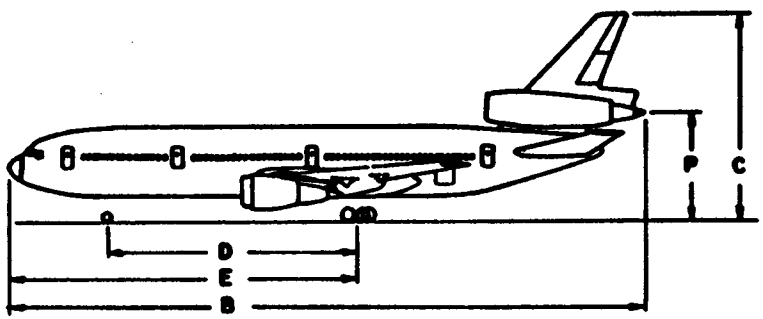

Figure A12-75. McDonnell-Douglas DC-10

	MAXIMUM TAKEOFF WEIGHT	MAXIMUM LANDING WEIGHT	A	B	C	D	E	F	G	J	K	M	N	P	TURN RADIUS
11	602,500 LB 273 289 KG	430,000 LB 195 045 KG	169'10" 51.77M	SEE NOTE	57'9" 17.60M	80'9" 24.61M	108'9" 33.15M	35'0" 10.67M	26'10" 8.18M	64'4" 19.61M	3'1" 0.94M	29'7" 9.02M	SEE NOTE	29'2" 8.89M	135'8" 41.35M
11 COMBI	602,500 LB 273 289 KG	458,000 LB 207 745 KG	169'10" 51.77M	SEE NOTE	57'9" 17.60M	80'9" 24.61M	108'9" 33.15M	35'0" 10.67M	26'10" 8.18M	64'4" 19.61M	3'1" 0.94M	29'7" 9.02M	SEE NOTE	29'2" 8.89M	135'8" 41.35M
11F	602,500 LB 273 289 KG	471,500 LB 213 869 KG	169'10" 51.77M	SEE NOTE	57'9" 17.60M	80'9" 24.61M	108'9" 33.15M	35'0" 10.67M	26'10" 8.18M	64'4" 19.61M	3'1" 0.94M	29'7" 9.02M	SEE NOTE	29'2" 8.89M	135'8" 41.35M

NOTE: OPTIONAL MAXIMUM TAKEOFF WEIGHT: 605,500 LB (274 650 KG).

"B" 201' 4" (61.37M) WITH CF6-80C2D1F ENGINES.
"B" 200'11" (61.24M) WITH PW 4360 ENGINES.

"N" TOP OF WINGLET 23'5" (7.14M).
"N" BOTTOM OF WINGLET 13'9" (4.19M).

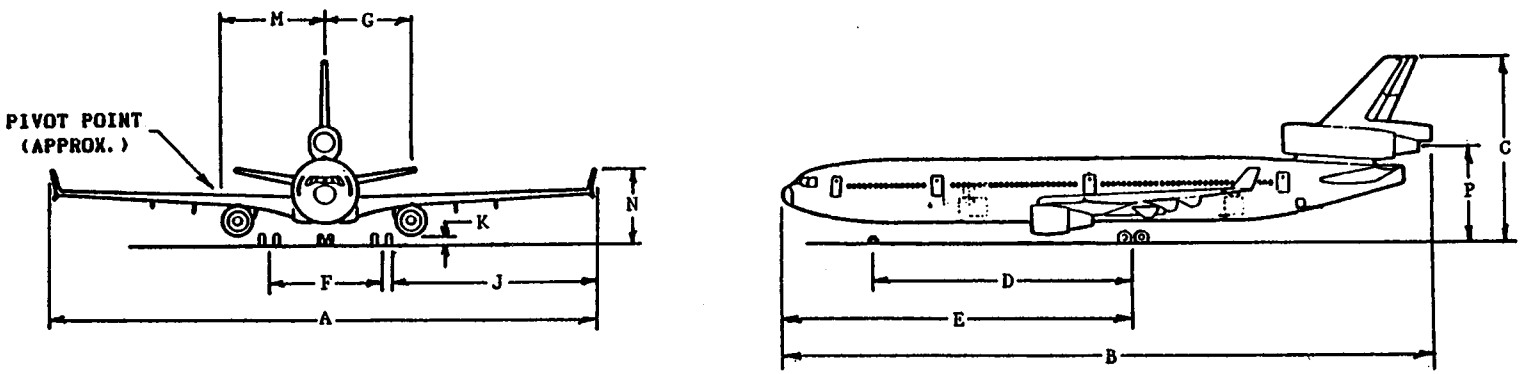

Figure A12-76. McDonnell-Douglas MD-11

MODEL	MAXIMUM TAKEOFF WEIGHT	MAXIMUM LANDING WEIGHT	A	B	C	D	F	NUMBER SEATS	TURN RADIUS
MU-2N MARQUISE	11,575 LB 5 250 KG	10,260 LB 4 654 KG	39'2" 11.94M	39'6" 12.04M	13'8" 4.17M	14'5" 4.39M	7'11" 2.41M	7	
MU-2P SOLITAIRE	10,470 LB 4 749 KG		39'2" 11.94M	33'3" 10.13M	12'11" 3.94M			9	

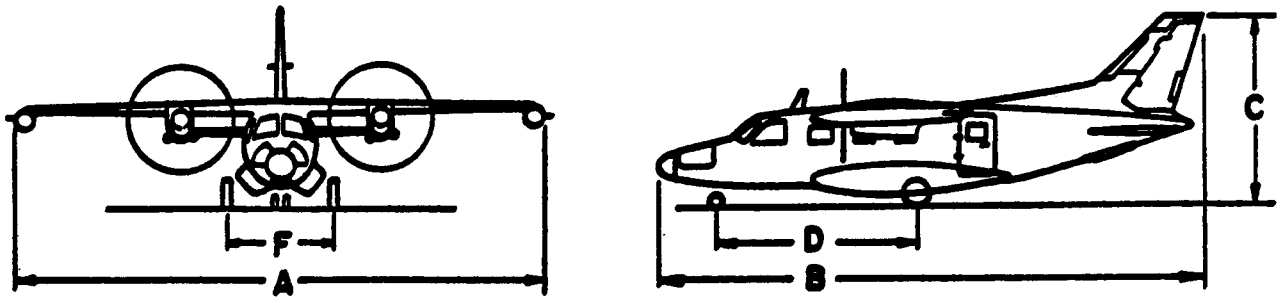

Figure A12-77. Mitsubishi MU-2

MODEL	MAXIMUM TAKEOFF WEIGHT	MAXIMUM LANDING WEIGHT	A	B	C	D	E	F	G	J	K	M	N	TURN RADIUS
YS-11A	54,010 LB 24 499KG	52,910 LB 24 000 KG	105'0" 32.00M	86'4" 26.31M	29'6" 8.99M	31'3" 9.53M		28'3" 8.61M		37'8" 11.38M				

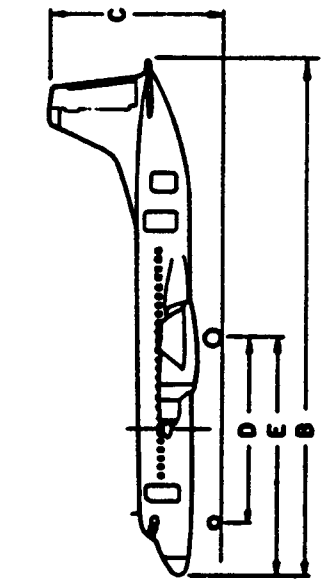

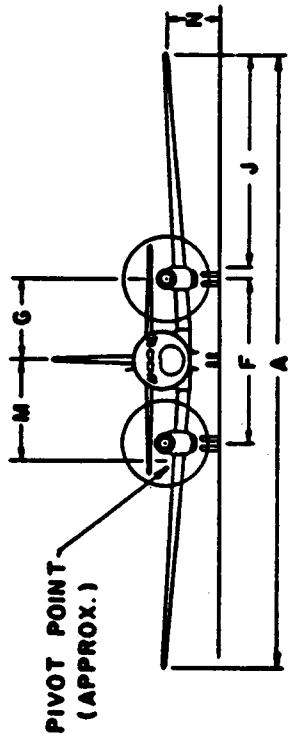

Figure A12-78. Nihon/N.A.M.C. YS-11A

MODEL	MAXIMUM TAKEOFF WEIGHT	MAXIMUM LANDING WEIGHT	A	B	C	D	E	F	G	J	K	M	N	TURN RADIUS
40	18,650 LB 8 459 KG	17,500 LB 7 938 KG	44'6" 13.56M	43'9' 13.34M	16'0" 4.88M	14'6" 4.42M	22'9" 6.93M	7'3" 2.21M	4'6" 1.37M	18'4" 5.59M	3'10" 1.16M	17'8" 5.38M	3'8" 1.12M	43'6" 13.26M
60	20,000 LB 9 072 KG	17,500 LB 7 938 KG	44'6" 13.56M	48'4" 14.73M	16'0" 4.88M	15'11" 4.85M	24'1" 7.34M	7'3" 2.21M	4'6" 1.37M	18'4" 5.59M	3'10" 1.16M		3'8" 1.12M	
70,75A	21,000 LB 9 525 KG	18,500 LB 8 391 KG	44'6" 13.56M	47'2" 14.40M	17'3" 5.24M	15'10" 4.81M		8'4" 2.54M	4'6" 1.37M		3'6" 1.05M		3'7" 1.08M	

NOTE: MODEL 75A HAS MAXIMUM (TAKEOFF) WEIGHT OF 23,300 LB (10 569 KG).
(LANDING) 22,000 LB (9 979 KG).

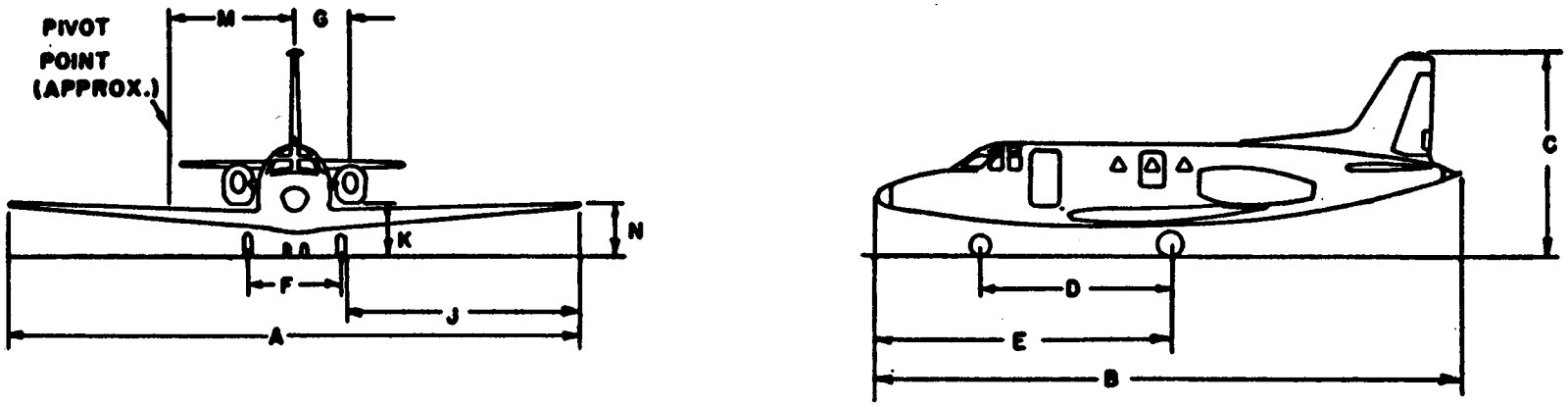

Figure A12-79. Rockwell International NA-265 Sabreliner

MODEL	MAXIMUM TAKEOFF WEIGHT	MAXIMUM LANDING WEIGHT	A	B	C	D	E	F	G	J	K	H	N	TURN RADIUS
SF 340	27,275 LB 12 372 KG	26,500 LB 12 020 KG	70'4" 21.44M	64'8" 19.71M	22'6" 6.86M	23'5" 7.14M	30'0" 9.14M	22'0" 6.71M	10'10" 3.30M	23'3" 7.09M	1'11" 0.58M	18'8" 5.69M	8'4" 2.54M	

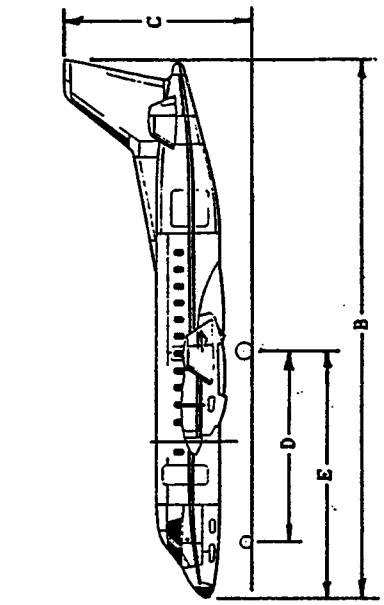

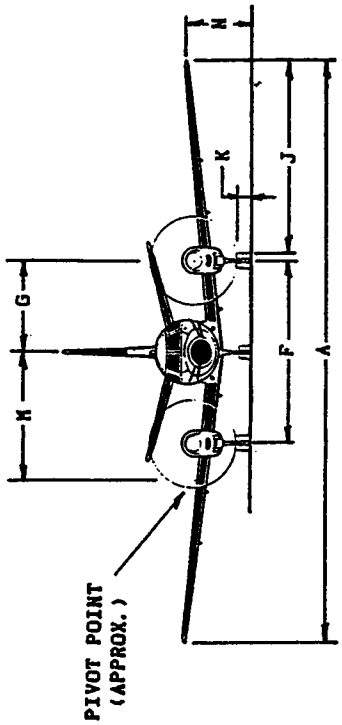

Figure A12-80. SAAB SF 340

MODEL	MAXIMUM TAKEOFF WEIGHT	MAXIMUM LANDING WEIGHT	A	B	C	D	F	NUMBER SEATS	TURN RADIUS
SC.7	12,500 LB 5 688 KG	12,500 LB 5,688 KG	64'11" 19.79M	40'1" 12.22M	15'0" 4.57M	14'10" 4.52M	13'10" 4.22M	21	
SC.7 -3M	13,700 LB 6 214 KG	13,500 LB 6 123 KG	64'11" 19.79M	40'1" 12.22M	15'0" 4.57M	14'10" 4.52M	13'10" 4.22M	22	
SC.7 -3M	14,500 LB 6 577 KG	13,500 LB 6 123 KG	64'11" 19.79M	40'1" 12.22M	15'0" 4.57M	14'10" 4.52M	13'10" 4.22M	22	
330	22,600 LB 10 251 KG	22,300 LB 10 115 KG	74'8" 22.76M	58'0" 17.68M	16'3" 4.95M	20'2" 6.15M	13'11" 4.24M	30	53'10" 16.41M
330 -200	22,900 LB 10 387 KG	22,600 LB 10 251 KG	74'8" 22.76M	58'0" 17.68M	16'3" 4.95M	20'2" 6.15M	13'11" 4.24M	30	53'10" 16.41M
360	26,453 LB 11 999 KG	26,100 LB 11 839 KG	74'10" 22.81M	70'10" 21.59M	23'8" 7.21M	23'2" 7.06M	13'11" 4.24M	36	53'10" 16.41M

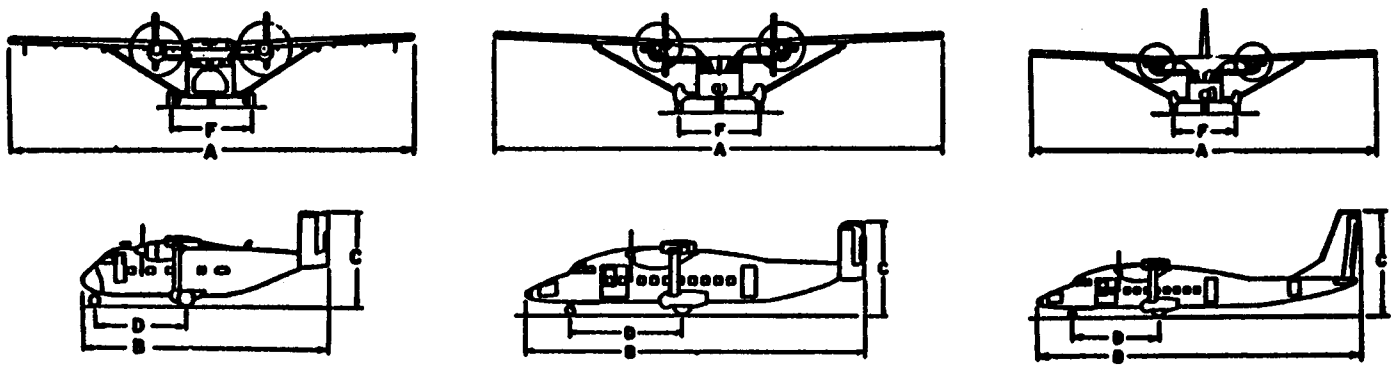

SC.7-3M 330 360

Figure A12-81. Short Brothers

MODEL	MAXIMUM TAKEOFF WEIGHT	MAXIMUM LANDING WEIGHT	A	B	C	D	E	F	G	H	J	K	L	M	N	TURN RADIUS
BELFAST	230,000 LB 104 326 KG	215,000 LB 97 522 KG	158'10" 48.41M	136'5" 41.58M	47'0" 14.33M	48'11" 14.66M		19'4" 5.89M								

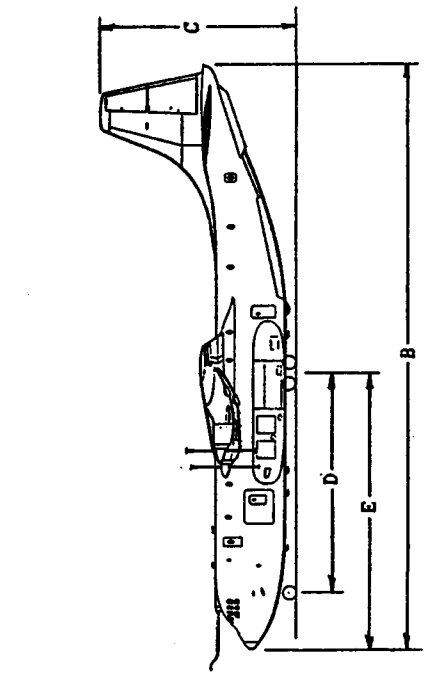

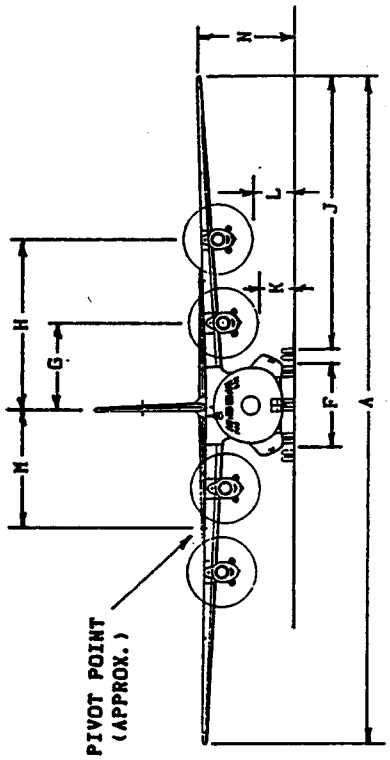

Figure A12-82. Shorts SC. 5/10 Belfast

MODEL	MAXIMUM TAKEOFF WEIGHT	MAXIMUM LANDING WEIGHT	A	B	C	D	F	NUMBER SEATS	TURN RADIUS
IIB	10,000 LB 4 536 KG	9,300 LB 4 218 KG	45'11" 14.00M	40'1" 12.22M	14'4" 4.36M		15'0" 4.57M	8	
III	12,500 LB 5 670 KG	11,500 LB 5 216 KG	46'3" 14.10M	42'2" 12.85M	16'8" 5.08M		15'0" 4.57M	8	
IV	12,500 LB 5 670 KG	11,500 LB 5 216 KG	46'3" 14.10M	59'5" 18.11M	16'8" 5.08M	19'2" 5.84M	15'0" 4.57M	12	
IVC	14,500 LB 6 577 KG	14,000 LB 6 350 KG	57'0" 17.37M	59'5" 18.11M	16'8" 5.08M			12	

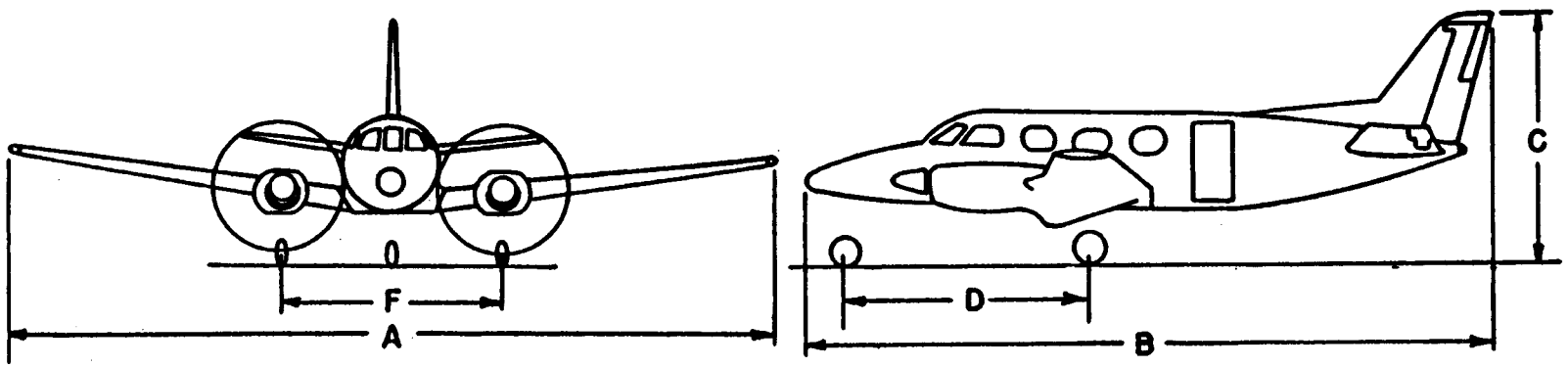

Figure A12-83. Swearingen Merlin

MODEL	MAXIMUM TAKEOFF WEIGHT	MAXIMUM LANDING WEIGHT	A	B	C	D	F	NUMBER SEATS	TURN RADIUS
II	12,500 LB 5 670 KG	12,500 LB 5 670 KG	46'3" 14.10M	59'5" 18.11M	16'8" 5.08M	19'2" 5.84M	15'0" 4.57M	22	
IIA	13,230 LB 6 001 KG	13,000 LB 5 897 KG	46'3" 14.10M	59'5" 18.11M	16'8" 5.08M				
III	14,500 LB 6 577 KG	14,000 LB 6 350 KG	57'0" 17.37M	59'5" 18.11M	16'8" 5.08M				
IIIH	16,000 LB 7 257 KG	15,500 LB 7 031 KG	57'0" 17.37M	59'5" 18.11M	16'8" 5.08M				
V	16,500 LB 7 484 KG	15,675 LB 7 110 KG							

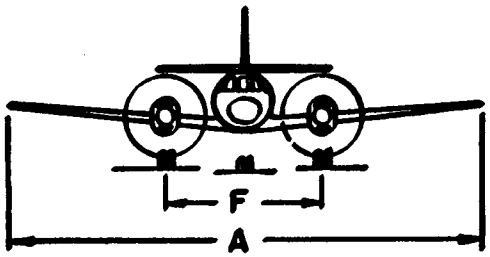

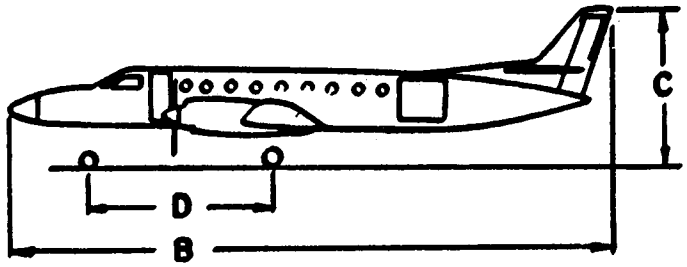

Figure A12-84. Swearingen Metro