FAA-AM-78-10

ORIGINAL

THE RELATIONSHIP OF PREDEVELOPMENTAL "150" TRAINING WITH NONCOMPETITIVELY SELECTED AIR TRAFFIC CONTROL TRAINEES TO FAA ACADEMY SUCCESS

James O. Boone
Civil Aeromedical Institute
Federal Aviation Administration
Oklahoma City, Oklahoma

MICROFILMED FROM
BEST AVAILABLE COPY

March 1978

Document is available to the public through the
National Technical Information Service,
Springfield, Virginia 22161

Prepared for
U.S. DEPARTMENT OF TRANSPORTATION
Federal Aviation Administration
Office of Aviation Medicine
Washington, D.C. 20591

26

NOTICE

This document is disseminated under the sponsorship of the Department of Transportation in the interest of information exchange. The United States Government assumes no liability for its contents or use thereof.

IFC

NOTICE

This document is disseminated under the sponsorship of the Department of Transportation in the interest of information exchange. The United States Government assumes no liability for its contents or use thereof.

IFC

Technical Report Documentation Page

1. Report No. FAA-AM-78-10	2. Government Accession No.	3. Recipient's Catalog No.
4. Title and Subtitle THE RELATIONSHIP OF PREDEVELOPMENTAL "150" TRAINING WITH NONCOMPETITIVELY SELECTED AIR TRAFFIC CONTROL TRAINEES TO FAA ACADEMY SUCCESS		5. Report Date March 1978
		6. Performing Organization Code
7. Author(s) James O. Boone		8. Performing Organization Report No.
9. Performing Organization Name and Address FAA Civil Aeromedical Institute P.O. Box 25082 Oklahoma City, Oklahoma 73125		10. Work Unit No. (TRAIS)
		11. Contract or Grant No.
12. Sponsoring Agency Name and Address Office of Aviation Medicine Federal Aviation Administration 800 Independence Avenue, S.W. Washington, D.C. 20591		13. Type of Report and Period Covered
		14. Sponsoring Agency Code

15. Supplementary Notes

Work was performed under Tasks AM-C-77-PSY-70 and AM-C-78-PSY-70.

16. Abstract

Past studies have demonstrated that women and minorities are less likely to be selected as FAA air traffic controllers than are nonminority men, and, when selected, are less likely to be successful. One major reason for this is that women and minorities have less aviation-related background experience. In response to this need the "150" Predevelopmental program was begun to give those selected for the program a 1-year orientation to aviation and air traffic control prior to FAA Academy training. The purpose of this research was to study the unique relationship between Predevelopmental training and Academy success. An overview of the relationships between various background characteristics, selection measures, Predevelopmental training measures, and Academy measures was first computed. Then, through path analysis the significant relationships were considered simultaneously to determine the unique relationship between Predevelopmental training and Academy success. The path models indicated that Predevelopmental training overall does enhance a trainee's potential for Academy success with a possible differential effect according to minority status.

17. Key Words Training Air Traffic Controller Assessment	18. Distribution Statement Document is available to the public through the National Technical Information Service, Springfield, Virginia 22161

19. Security Classif. (of this report)	20. Security Classif. (of this page)	21. No. of Pages	22. Price
Unclassified	Unclassified	23	

Form DOT F 1700.7 8-72 Reproduction of completed page authorized

THE RELATIONSHIP OF PREDEVELOPMENTAL "150" TRAINING WITH NONCOMPETITIVELY SELECTED AIR TRAFFIC CONTROL TRAINEES TO FAA ACADEMY SUCCESS

I. Introduction.

Several past studies have indicated that prior air traffic control (ATC) experience (usually from military service) is strongly related to being selected for ATC training in the Federal Aviation Administration (FAA) and to later success in FAA ATC training (2,3,10). It was also noted in these studies that women who are selected for training have significantly less prior ATC experience than do men (1). More recent unpublished reports (6) demonstrate that minorities are also less apt to have prior ATC experience than are nonminorities. Based on the above information related to experience and other existing social conditions, women and minorities have not been represented in ATC to the extent that nonminority men have. Civil Aeromedical Institute (CAMI) records during 1976 show that 79 percent of ATC trainees who entered the FAA Academy were nonminority men, while women and minorities combined comprised the remaining 21 percent.

In response to a need for more minority and women selectees in ATC, the Predevelopmental "150" program was begun in 1968. This 1-year program, conducted primarily at field facilities includes a 17-week set of 15 courses taught at the FAA Academy related to basic education, aviation principles, and principles of air traffic control. Onsite orientation is also provided. The program is designed to compensate for deficiencies in the backgrounds of trainees prior to their entry into formal air traffic control training at the FAA Academy. Various evaluations of the "150" program in the past have been aimed at determining if the selection of women and minorities through the "150" program resulted in a higher percentage of women and minorities in ATC work (8,9). However, there has not been an explicit study to determine if the training received in the "150" program, which constitutes a 1-year agency investment in every "150" trainee, has indeed produced a direct impact on the "150" trainee's ability to achieve success in air traffic control. Although no measures are taken to determine how much is learned through onsite orientation, tests are administered during the 17 weeks of Academy training and the scores are recorded. This study is directed toward determining the unique relationship between predevelopment training scores and the trainee's ability to achieve success in FAA Academy training.

II. Methods.

Subjects. The sample consisted of all persons who came through the Predevelopmental (FAA-150) program in calendar years 1974, 1975, and 1976, who finished Academy training between January 1976 and March 1977, and for whom CAMI had both Predevelopmental and Academy training scores. The final number of persons in the study was n = 157.

Variables included in the study. Variables are listed below with the abbreviated form to be used in this report.

Variable	Code	Abbreviation
1. Sex	(1 = woman, 2 = man)	SEX
2. Minority Status	(1 = nonwhite, 2 = white)	MINSTA
3. Option	(1 = Terminal, 2 = En Route)	OPTION
4. Education	(1 = No College, 2 = Some College, 3 = Degree)	ED
5. ATC Experience	(1 = Yes, 2 = No)	EXP
Civil Service Commission Scores		
6. Part Score 24 - Computations		CSC24
7. Part Score 51 - Spatial Patterns		CSC51
8. Part Score 540 - ATC Aptitude I & II		CSC540
9. Part Score 157 - Letter Sequence		CSC157
10. Part Score 135 - Oral Directions		CSC135
11. CSC Composite Score		COMP
12. CSC Earned Rating (includes experience and preference points)		CSCER
Academy Scores		
13. Academy Final Phase Score 2		PH1
14. Academy Final Phase Score 3		PH2
15. Academy Final Phase Score 4		PH3
16. Total Lab Z-Score		ZLAB
Predevelopmental Program Scores		
17. Communications		COMM
18. Social Studies		SOCSTU
19. Human Relations		HUMREL
20. Mathematics		MATH
21. Computations		COMPUT
22. Weather		WEA
23. Navigation		NAV
24. Federal Aviation Regulations		FAR
25. Flight Service Station		FSS
26. Aerodynamics		AERO
27. Aircraft Identification		ACRTID
28. National Airspace System		NAS
29. Air Traffic Control		ATC
30. Aviation History		AVNHIS
31. Facility Management		FACMAN
32. Average for Predevelopmental Scores		AVER

Analyses. The first stage of the analyses described the predevelopmental subjects in terms of their background characteristics, i.e., sex,

minority status, education, experience; scores on the Civil Service Commission tests; scores on tests given during the Predevelopmental program; and scores made on the lab problems during Academy training. The description of these characteristics and scores were in the form of means, standard deviations, and sample sizes for each variable.

The second stage of the analyses was exploratory. Initially, how all of the background characteristics and scores are related to each other was explored by means of a correlation index, computed by pairing all the characteristics and scores. Next, a series of analyses of variance were computed. These analyses were used to determine if the predevelopmentals differed on their scores according to their background characteristics. For example, do men score higher than women on the Civil Service Commission tests? The last step in exploration involved a statistical look at the pass/fail rates in Academy training by each of the background characteristics to determine, for example, if women fail more often than men. Chi-Square was used to test for differences. In all cases, statistical significance was set at $\alpha = .05$ (or better) level of chance.

In the last step of the analyses all the exploratory measures were reviewed, and the significant measures were used to develop models in the form of path diagrams to explain the unique relationship between the Predevelopmental program and Academy success.

III. Results.

Descriptive Statistics. There are a few items to note in relation to the descriptive statistics (Table 1). First, the mean scores for the Predevelopmental program tests are quite high, generally around 90 (out of a possible 100) with an overall average of 91.75. Second, the Academy scores for predevelopmentals are low for all training phases and for the overall ZLAB. (Note: The phase and ZLAB scores are in standard score form; therefore, a negative score means it is that many standard deviations below the mean.) Another item related to the Academy scores is the large standard deviations; there was a large range in the scores for Academy training. The lowest sample size (n) is for the Civil Service Commission scores (about 50 percent of the total sample). Finally, the frequencies in the data (Tables 2-6) are about equal for sex, minority status, and option. Notable deviations occur for nonminority men and for minority women, both of whom are represented somewhat less than their counterparts.

Exploratory Statistics (Table 7). Correlations between the following variables were selected for further study in the explanation section. They by no means define all possible meaningful correlations about which questions could be posed; however, they do appear to be the more useful ones. The paired variables and their correlations are: (1) SEX - COMP = 0.129, (2) MINSTA - COMP = 0.118, (3) MINSTA - ZLAB = 0.239, (4) MINSTA - AVER = 0.243, (5) OPTION - AVER = 0.225, (6) COMP - ZLAB = 0.161, (7) COMP - AVER = 0.241, and (8) ZLAB - AVER = 0.464. As can be seen, minority status correlates

TABLE 1. Descriptive Statistics for All Variables.

Variable	Mean	S.D.	N
SEX	1.48	0.50	157
MINSTA	1.46	0.50	157
OPTION	1.51	0.50	157
CSC24	46.11	7.75	83
CSC51	57.65	9.68	79
CSC540	37.81	11.46	80
CSC157	69.71	15.18	80
CSC135	27.13	5.31	78
COMP	79.45	7.27	88
CSCER	81.74	7.82	58
PH1	-0.85	1.98	153
PH2	-1.43	2.43	154
PH3	-1.08	1.36	154
ZLAB	-1.84	2.40	153
COMM	90.54	5.04	155
SOCSTU	90.58	5.07	36
HUMREL	86.48	7.72	23
MATH	91.79	9.26	155
COMPUT	92.31	6.93	154
WEA	92.33	6.24	155
NAV	92.06	6.61	155
FAR	93.50	5.54	155
FAS	92.58	6.33	155
AERO	95.04	5.59	155
ACRTID	89.21	9.15	155
NAS	94.24	5.11	153
ATC	90.21	4.97	155
AVNHIS	87.41	5.52	116
FACMAN	90.14	6.29	129
AVER	91.75	4.08	155
ED	1.93	0.56	98
EXP	1.73	0.44	98

Table 2. Two-Way Frequencies for SEX by OPTION.

	Ter	EnR	Total
Males :	41	41	82
Females :	36	39	75
Total :	77	80	157

Phi = .02
X^2 = .063, df = 1, p = ns

Table 3. Two-Way Frequencies for SEX by MINSTA.

	Min	Non	Total
Males :	59	23	82
Females :	26	49	75
Total :	85	72	157

Phi = .35
X^2 = 21.93, df = 1, p < .001

Table 4. Two-Way Frequencies for MINSTA by ED.

	No Inf.	No Coll	Some Coll	Deg.	Total
Min :	35	10	35	5	85
Non Min :	24	9	32	7	72
Total :	59	19	67	12	157

Phi = .07
X^2 = .048, df = 2, p = ns

Table 5. Two-Way Frequencies for MINSTA by EXP.

	No Inf.	Exp.	No Exp.	Total
Min :	35	15	35	85
Non Min :	24	11	37	72
Total :	59	26	72	157

Phi = .08
X^2 = .63, df = 1, p = ns

Table 6. Two-Way Frequencies for MINSTA by OPTION.

	Ter	EnR	Total
Min :	50	35	85
Non Min :	27	45	72
Total :	77	80	157

Phi = .21
X^2 = 7.09, df = 1, p < .01

6

TABLE 7. Intercorrelation Matrix for Background Characteristics and Measures.

	SEX	MINSTA	OPTION	CSC24	CSC31	CSC340	CSC153	CSC135	COND	CSC128	PRI	PR2	PR3	ZLAB	COMM	SOCSTL	KURUEI	MATH	COMPUT	WEA	NAV	FAR	FAS	MEO	ACRTID	NAS	ATC	AVNOLS	FACHAN	AVER
SEX		0.374	0.020	0.252	-0.226	0.135	0.137	0.116	0.129	-0.059	0.026	-0.065	0.013	0.028	0.189	0.128	-0.027	0.123	0.103	-0.005	0.100	0.009	-0.014	-0.168	-0.202	-0.044	-0.022	-0.155	0.013	-0.011
		157*	157	83	79	80	79	78	86	58	157	154	154	153	155	36	23	155	154	155	155	155	155	155	155	153	155	116	129	155
MINSTA			0.213	0.189	0.059	-0.168	0.144	0.092	0.118	0.220	0.328	0.231	0.353	0.219	0.322	0.239	0.389	0.607	0.269	0.270	0.317	0.251	0.180	0.073	0.194	0.119	0.312	0.146	-0.098	0.343
			157	83	79	80	80	78	88	56	157	154	154	153	155	36	23	155	154	155	155	155	155	155	155	151	155	116	129	155
OPTION				-0.179	0.161	-0.104	0.166	-0.213	-0.069	0.097	0.402	-0.096	-0.034	-0.077	0.210	0.309	0.526	0.141	0.189	0.230	0.213	0.150	0.100	0.164	0.169	0.165	0.135	-0.005	0.170	0.225
				83	79	80	80	78	88	56	157	154	154	153	155	36	23	155	154	155	155	155	155	155	155	153	155	116	129	155
CSC24					-0.189	0.267	-0.068	0.160	0.383	0.226	0.326	0.133	0.102	0.194	0.155	-0.040	-0.229	0.238	0.115	0.195	0.081	0.085	0.145	-0.008	0.110	0.124	0.204	0.140	-0.022	0.199
					79	80	80	78	83	46	81	82	82	81	82	22	17	82	82	82	82	82	82	82	82	81	82	57	62	82
CSC31						-0.381	0.067	0.011	0.258	0.272	0.101	0.062	-0.168	-0.016	-0.070	0.181	0.485	0.040	0.068	0.145	0.010	-0.018	0.001	0.116	0.230	0.065	0.188	-0.275	0.083	0.036
						79	76	77	79	45	77	76	76	77	76	14	14	79	78	78	78	78	78	78	78	77	78	56	61	78
CSC340							-0.047	0.165	0.490	0.352	0.014	-0.037	0.151	0.075	0.094	-0.314	-0.517	-0.116	-0.119	-0.061	0.079	0.056	-0.138	-0.080	-0.186	-0.127	-0.046	0.038	0.090	-0.053
							79	77	80	46	78	79	79	78	79	14	14	79	79	79	79	79	79	79	79	78	79	57	62	79
CSC153								0.067	0.451	0.539	0.219	0.089	0.041	0.101	0.015	0.195	0.045	0.230	0.174	0.240	0.139	0.056	0.086	-0.066	0.191	0.166	0.191	-0.076	0.049	0.129
								78	80	45	78	79	79	78	79	22	15	79	79	79	79	79	79	79	79	78	79	56	61	79
CSC135									0.122	0.137	0.002	0.132	0.169	0.184	0.303	0.412	0.235	0.104	0.186	0.037	0.025	-0.051	-0.010	-0.003	0.098	0.060	0.224	0.008	-0.055	0.090
									78	43	78	77	77	76	77	21	15	77	77	77	77	77	77	77	77	76	77	54	59	77
COND										0.860	0.168	0.125	0.095	0.161	0.172	0.317	0.055	0.225	0.166	0.109	0.116	0.190	0.074	-0.023	0.178	0.175	0.108	-0.010	0.058	0.204
										90	56	87	87	86	87	22	17	87	87	87	87	87	87	87	87	86	87	62	67	87
CSC128											0.227	0.172	0.014	0.141	0.174	0.117	0.103	0.108	0.065	0.195	0.219	0.213	0.058	-0.070	0.243	0.039	0.150	-0.000	0.287	0.215
											56	57	57	56	57	16	13	57	57	57	57	57	57	57	57	56	57	43	46	57
PR1												0.194	0.387	0.372	0.381	0.342	0.362	0.391	0.371	0.304	0.469	0.396	0.609	0.264	0.321	0.273	0.449	0.183	0.212	0.574
												154	154	152	152	34	23	154	150	151	151	151	151	151	151	149	151	114	125	151
PR2													0.413	0.852	0.106	0.168	-0.021	0.251	0.181	0.222	0.195	0.303	0.033	0.262	0.338	0.221	0.301	0.109	0.038	0.314
													154	153	152	34	23	152	151	152	152	152	152	152	152	150	152	115	126	152
PR3														0.500	0.331	0.132	0.046	0.687	0.423	0.381	0.653	0.606	0.195	0.349	0.331	0.265	0.461	0.312	0.121	0.524
														153	152	34	23	152	151	152	152	152	152	152	152	150	152	115	126	152
ZLAB															0.222	0.261	0.129	0.417	0.326	0.337	0.258	0.196	0.150	0.318	0.342	0.313	0.468	0.128	0.043	0.464
															151	31	23	151	150	151	151	151	151	151	151	149	151	114	125	151
COMM																0.312	0.395	0.467	0.432	0.467	0.302	0.384	0.355	0.266	0.240	0.273	0.392	0.317	0.255	0.618
																36	23	155	154	155	155	155	155	155	155	153	155	116	129	155
SOCSTL																	0.204	0.329	0.220	0.338	0.139	0.406	0.352	0.269	0.378	0.508	0.368	-----	0.329	0.559
																	23	36	36	36	36	36	36	36	36	36	36	0	13	36
KURUEI																		0.383	0.384	0.607	0.619	0.687	0.524	0.562	0.061	0.338	0.332	-----	-----	0.606
																		23	23	23	23	23	23	23	23	23	23	0	0	23
MATH																			0.656	0.672	0.574	0.513	0.313	0.226	0.368	0.386	0.500	0.271	0.175	0.709
																			154	155	155	155	155	155	155	153	155	116	129	155
COMPUT																				0.590	0.582	0.682	0.428	0.250	0.283	0.362	0.599	0.356	0.216	0.676
																				154	154	154	154	154	154	152	154	113	128	154
WEA																					0.692	0.593	0.362	0.363	0.421	0.292	0.644	0.408	0.211	0.723
																					155	155	155	155	155	153	155	116	129	155
NAV																						0.541	0.602	0.313	0.601	0.359	0.587	0.383	0.319	0.721
																						155	155	155	155	153	155	116	129	155
FAR																							0.360	0.357	0.438	0.421	0.639	0.382	0.106	0.719
																							155	155	155	153	155	116	129	155
FAS																								0.200	0.273	0.379	0.481	0.351	0.265	0.586
																								155	155	153	155	116	129	155
MEO																									0.261	0.288	0.323	0.276	0.201	0.671
																									155	153	155	116	129	155
ACRTID																										0.434	0.311	0.216	0.102	0.630
																										153	155	116	129	155
NAS																											0.531	0.237	0.209	0.551
																											153	114	127	153
ATC																												0.397	0.226	0.750
																												116	129	155
AVNOLS																													0.260	0.565
																													116	116
FACHAN																														0.370
																														129
AVER																														

*Sample size for correlation coefficient is listed under each coefficient

well with AVER, and AVER correlates well with ZLAB. These relationships will be of particular interest in explanation.

The next set of exploratory statistics is transitional since the analyses edge into the area of explanation. These consist first of several one-way analyses of variances. These analyses determine if there are statistically significant differences in (i) Civil Service Commission composite scores (COMP), (ii) Predevelopmental program total average scores (AVER), and (iii) Academy training lab (ZLAB) totals (three dependent measures), based on whether the subjects are (i) men or women (SEX), (ii) En Route or Terminal (OPTION), (iii) minority or nonminority (MINSTA), and on (iv) educational level (ED), and (v) ATC experience (EXP) (five independent variables). The following differences were found to be statistically significant: (1) MINSTA for ZLAB, (2) MINSTA for AVER, and (3) OPTION for AVER. Again note the effect of minority status. Results of analyses of variance form part of the background for analytic discussion in the next section.

The second set of analyses in the transitional exploratory area comprises two-way frequency tables (Tables 23-31). These tables present the Academy pass/fail rates by sex, minority status, option, and the various combinations. A Phi coefficient and a Chi-Square statistic were computed for each table to determine if there was a statistically significant difference in the pass/fail rates for that variable. Pass/fail rates found significantly different were: (1) MINSTA for pass/fail, (2) MINSTA (men only) for pass/fail, and (3) MINSTA (En Route only) for pass/fail. This third set of exploratory statistics again emphasizes minority status.

Explanatory Statistics. The exploratory statistics presented above are relatively strightforward computations that offer insight in terms of relationships or differences; however, they are inadequate (although they are often so used incorrectly) to directly explain or to infer causality for controlling effects. What is needed is a way to consider the relationships between variables simultaneously and to consider the unique contribution of each of the independent variables to the dependent variable of interest. This can be done by constructing path diagram models and using correlations to perform a series of multiple linear regressions to determine the path coefficients (Betas). Given proper assumptions, the coefficients can then be interpreted as the unique contribution of each path in explaining variance in the dependent variable (5). The correlations presented above revealed some interesting relationships that can be used to develop path diagrams.

The first diagram relates to the following questions: If the CSC COMP scores represent a measure of the ability of predevelopmentals to achieve Academy success prior to predevelopmental training, how much does predevelopmental training add to their ability to achieve Academy success? After partialling out the trainee's ability level prior to predevelopmental training, how much does predevelopmental training contribute to Academy success? The questions can be expressed in the model presented in Figure 1.

TABLE 8. Analysis of Variance: Sex Effect for CSC Composite.

	N	Mean	S.D.
Males :	28	82.18	8.40
Females :	30	81.33	7.35

Source	SS	df	MS	F
Between Groups :	10.31	1	10.31	0.17 ns
Within Groups :	3472.78	56	62.01	
Total :	3483.09	57		

Level of significance is indicated by ns (nonsignificant), * (p = .05), ** (p = .005), and *** (p = .001).

TABLE 9. Analysis of Variance: Education Effect for CSC Composite.

	N	Mean	S.D.
No Coll :	6	82.50	6.98
Some Coll :	26	82.04	6.09
Degree :	3	85.33	12.34

Source	SS	df	MS	F
Between Groups :	29.27	2	14.63	0.32 ns
Within Groups :	1475.14	32	46.10	
Total :	1504.41	34		

Level of significance is indicated by ns (nonsignificant), * (p = .05), ** (p = .005), and *** (p = .001).

TABLE 10. Analysis of Variance: Experience Effect for CSC Composite.

	N	Mean	S.D.
Exp. :	11	84.00	5.22
No Exp. :	24	81.67	7.20

Source	SS	df	MS	F
Between Groups :	41.08	1	41.08	0.93 ns
Total :	1504.41	34		

Level of significance is indicated by ns (nonsignificant), * (p = .05), ** (p = .005), and *** (p = .001).

TABLE 11. Analysis of Variance: Minority Effect for CSC Composite.

	N	Mean	S.D.
Min. :	29	80.03	7.18
Nonmin. :	29	83.45	8.17

Source	SS	df	MS	F
Between Groups :	168.97	1	168.97	2.86 ns
Total :	3483.09	57		

Level of significance is indicated by ns (nonsignificant), * (p = .05), ** (p = .005), and *** (p = .001).

TABLE 12. Analysis of Variance: Option Effect for CSC Composite.

	N	Mean	S.D.
Terminal :	28	81.00	8.46
EnRoute :	30	82.43	7.24

Source	SS	df	MS	F
Between Groups :	29.75	1	29.75	0.48 ns
Total :	3483.09	57		

Level of significance is indicated by ns (nonsignificant), * (p = .05), ** (p = .005), and *** (p = .001).

TABLE 13. Analysis of Variance: Sex Effect for ZLAB.

	N	Mean	S.D.
Males :	81	-1.78	2.53
Females :	72	-1.91	2.25

Source	SS	df	MS	F
Between Groups :	0.70	1	0.70	0.12 ns
Total :	872.19	152		

Level of significance is indicated by ns (nonsignificant), * (p = .05), ** (p = .005), and *** (p = .001).

TABLE 14. Analysis of Variance: Experience Effect for ZLAB.

	N	Mean	S.D.
Exp. :	26	-2.29	2.43
No Exp. :	68	-2.09	2.79

Source	SS	df	MS	F
Between Groups :	0.71	1	0.71	0.10 ns
Total :	677.13	94		

Level of significance is indicated by ns (nonsignificant), * (p = .05), ** (p = .005), and *** (p = .001).

TABLE 15. Analysis of Variance: Minority Effect for ZLAB.

	N	Mean	S.D.
Min. :	83	-2.37	2.57
Nonmin. :	70	-1.22	2.01

Source	SS	df	MS	F
Between Groups :	49.98	1	49.98	9.18 **
Total :	872.19	152		

Level of significance is indicated by ns (nonsignificant), * (p = .05), ** (p = .005), and *** (p = .001).

TABLE 16. Analysis of Variance: Option Effect for ZLAB.

	N	Mean	S.D.
Terminal :	77	-1.67	1.91
EnRoute :	76	-2.01	2.81

Source	SS	df	MS	F
Between Groups :	4.49	1	4.49	0.78 ns
Total :	872.19	152		

Level of significance is indicated by ns (nonsignificant), * (p = .05), ** (p = .005), and *** (p = .001).

TABLE 17. Analysis of Variance: Education Effect for ZLAB.

	N	Mean	S.D.
No Coll :	17	-2.26	2.84
Some Coll :	66	-2.32	2.77
Degree :	12	-1.02	1.76

Source	SS	df	MS	F
Between Groups :	17.36	2	8.68	1.21 ns
Total :	677.13	94		

Level of significance is indicated by ns (nonsignificant), * (p = .05), ** (p = .005), and *** (p = .001).

TABLE 18. Analysis of Variance: Sex Effect for Predevelopmental Total Average.

	N	Mean	S.D.
Males :	81	91.79	3.77
Females :	74	91.70	4.43

Source	SS	df	MS	F
Between Groups :	0.25	1	0.25	0.01 ns
Total :	2569.13	154		

Level of significance is indicated by ns (nonsignificant), * (p = .05), ** (p = .005), and *** (p = .001).

TABLE 19. Analysis of Variance: Education Effect for Predevelopmental Total Average.

	N	Mean	S.D.
No Coll :	19	90.79	4.92
Some Coll :	66	91.65	4.06
Degree :	12	93.83	2.76

Source	SS	df	MS	F
Between Groups :	70.25	2	35.13	2.08 ns
Total :	1658.06	96		

Level of significance is indicated by ns (nonsignificant), * (p = .05), ** (p = .005), and *** (p = .001).

TABLE 20. Analysis of Variance: Experience Effect for Predevelopmental Total Average.

	N	Mean	S.D.
Exp. :	25	92.76	3.96
No Exp. :	72	91.40	4.19

Source	SS	df	MS	F
Between Groups :	34.19	1	34.19	2.00 ns
Total :	1658.06	96		

Level of significance is indicated by ns (nonsignificant), * (p = .05), ** (p = .005), and *** (p = .001).

TABLE 21. Analysis of Variance: Minority Effect for Predevelopmental Total Average.

	N	Mean	S.D.
Min. :	84	90.46	4.20
Nonmin. :	71	93.27	3.39

Source	SS	df	MS	F
Between Groups :	302.38	1	302.38	20.41 ***
Total :	2569.13	154		

Level of significance is indicated by ns (nonsignificant), * (p = .05), ** (p = .005), and *** (p = .001).

TABLE 22. Analysis of Variance: Option Effect for Predevelopmental Total Average.

	N	Mean	S.D.
Terminal :	76	90.82	4.48
EnRoute :	79	92.65	3.46

Source	SS	df	MS	F
Between Groups :	129.63	1	129.63	8.13 **
Total :	2569.13	154		

Level of significance is indicated by ns (nonsignificant), * (p = .05), ** (p = .005), and *** (p = .001).

TABLE 23. Two-Way Frequency Distribution for Predevelopmentals (Total Group) by Sex.

	Pass		Fail		Total	
Males :	54	40%*	19	13%	73	53%
Females :	49	35%	15	12%	64	47%
Total :	103	75%	34	25%	137**	100%

Phi = .0299
Chi-Square = .123 df = 1 p = ns

*Proportions or probabilities based on total sample.
**One withdrawal (male, nonminority, EnRoute).

TABLE 24. Two-Way Frequency Distribution for Predevelopmentals (Total Group) by Minority Status.

	Pass		Fail		Total	
Min. :	51	37%*	27	20%	78	57%
Nonmin. :	52	38%	7	5%	59	43%
Total :	103	75%	34	25%	137**	100%

Phi = .2524
Chi-Square = 9.319 df = 1 $p \leq .01$

*Proportions or probabilities based on total sample.
**One withdrawal (male, nonminority, EnRoute).

TABLE 25. Two-Way Frequency Distribution for Predevelopmentals (Total Group) by Option.

	Pass		Fail		Total	
Terminal :	52	38%*	20	15%	72	53%
EnRoute :	51	37%	14	10%	65	47%
Total :	103	75%	34	25%	137**	100%

Phi = .0719
Chi-Square = .7127 df = 1 p = ns

*Proportions or probabilities based on total sample.
**One withdrawal (male, nonminority, EnRoute).

TABLE 26. Two-Way Frequency Distribution for Predevelopmentals (Female) by Minority Status.

	Pass		Fail		Total	
Min. :	15	23%*	8	13%	23	36%
Nonmin. :	34	52%	7	12%	41	64%
Total :	49	75%	15	25%	64**	100%

Phi = .1957
Chi-Square = 2.5752 df = 1 p = ns

*Proportions or probabilities based on total sample.
**One withdrawal (male, nonminority, EnRoute).

TABLE 27. Two-Way Frequency Distribution for Predevelopmentals (Female) by Option.

	Pass		Fail		Total	
Terminal :	25	39%*	9	14%	34	53%
EnRoute :	24	38%	6	9%	30	47%
Total :	49	77%	15	23%	64**	100%

Phi = .076
Chi-Square = .3719 df = 1 p = ns

*Proportions or probabilities based on total sample.
**One withdrawal (male, nonminority, EnRoute).

TABLE 28. Two-Way Frequency Distribution for Predevelopmentals (Male) by Minority Status.

	Pass		Fail		Total	
Min. :	36	49%*	19	26%	55	75%
Nonmin. :	18	25%	0	0%	18	25%
Total :	54	74%	19	26%	73**	100%

Phi = .3213
Chi-Square = 8.4061 df = 1 $p \leq .01$

*Proportions or probabilities based on total sample.
**One withdrawal (male, nonminority, EnRoute).

TABLE 29. Two-Way Frequency Distribution for Predevelopmentals (Male) by Option.

	Pass		Fail		Total	
Terminal :	27	37%*	11	15%	38	52%
EnRoute :	27	37%	8	11%	35	48%
Total :	54	74%	19	26%	73**	100%

Phi = .0692
Chi-Square = .3510 df = 1 p = ns

*Proportions or probabilities based on total sample.
**One withdrawal (male, nonminority, EnRoute).

TABLE 30. Two-Way Frequency Distribution for Predevelopmentals (EnRoute) by Minority Status.

	Pass		Fail		Total	
Min. :	19	29%*	12	18%	31	47%
Nonmin. :	32	49%	2	4%	34	53%
Total :	51	78%	14	22%	65**	100%

Phi = .3705
Chi-Square = 10.3401 df = 1 $p \leq .01$

*Proportions or probabilities based on total sample.
**One withdrawal (male, nonminority, EnRoute).

TABLE 31. Two-Way Frequency Distribution for Predevelopmentals (Terminal) by Minority Status.

	Pass		Fail		Total	
Min. :	32	44%*	15	21%	47	65%
Nonmin. :	20	28%	5	7%	25	35%
Total :	52	72%	20	28%	72**	100%

Phi = .1256
Chi-Square = 1.1548 df = 1 p = ns

*Proportions or probabilities based on total sample.
**One withdrawal (male, nonminority, EnRoute).

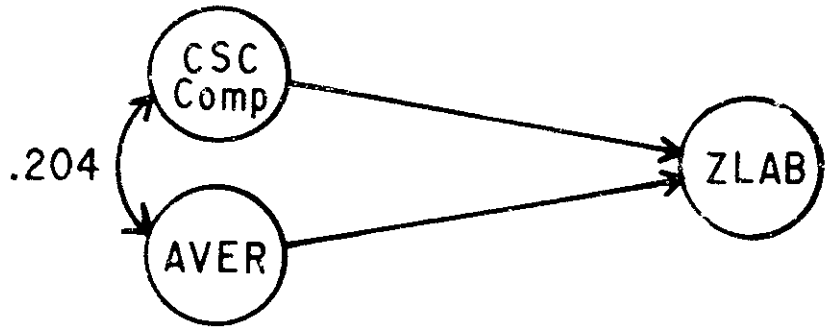

Figure 1. Path diagram for Model I (without path coefficients). Effect of Predevelopmental training on Academy success.

Regressing ZLAB on CSC COMP and predevelopmental AVER produces the relationships depicted in Figure 2.

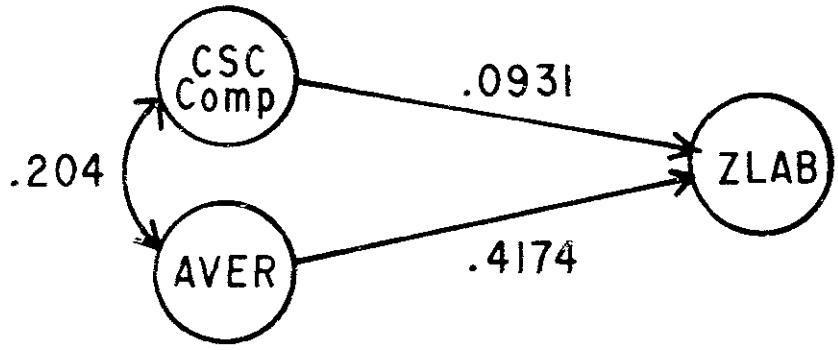

Figure 2. Path diagram for Model I (with path coefficients). Effect of Predevelopmental training on Academy success.

Clearly, the predevelopmental AVER adds a large amount of explanatory power relative to what CSC COMP does in explaining ZLAB scores. To determine how well the model represents the data, the original correlation matrix was reproduced by using the path coefficients. The coefficients above the diagonal are the original correlations; the coefficients below the diagonal are the reproduced correlations. As viewed from Table 32, the model represents the data very closely. This evidence supports the belief that the Predevelopmental program adds significantly to the trainee's ability to achieve success in the Academy program.

Building on the existing model, is there another variable chronologically preceding CSC COMP that might provide useful information? An obvious one that consistently showed up in the exploratory analyses was minority status, and another variable preceding CSC COMP chronologically is sex. So, another question can be posed: Does the relationship between the Predevelopmental

TABLE 32. Efficiency Table for Model I.

	CSC	Aver	ZLab
CSC	1.000	.204	.161
Aver	.204	1.000	.464
ZLab	.156	.436	1.000

Correlations above the diagonal are original; those below the diagonal are reproduced from path coefficients.

program and the ability to achieve Academy success differ according to minority status or sex? First, minority status is introduced into the model. To test this model, ZLAB scores were regressed directly on MINSTA, CSC COMP, and AVER to determine direct relationships, and then AVER was regressed on MINSTA and CSC COMP to determine indirect relationships. The results are presented in Figure 3.

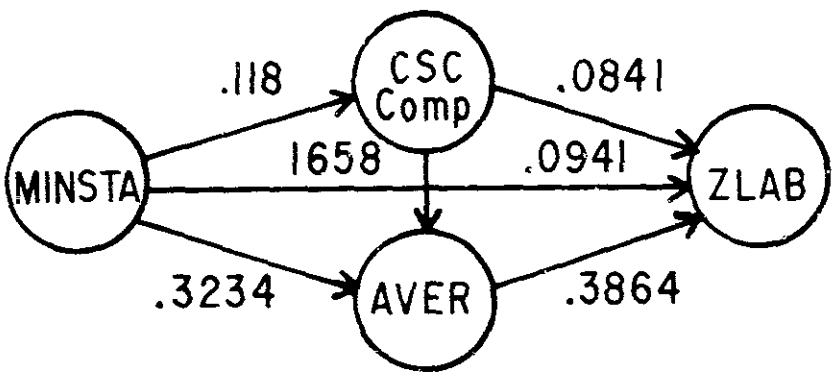

Figure 3. Path diagram for Model II. The influence of minority status on the effect of predevelopmental training on Academy success.

The model in Figure 3 demonstrates a mild direct contribution (.0841) of CSC COMP (the measure used to represent the ability to achieve Academy success prior to the predevelopmental training) and minority status (.0941) on ZLAB scores (Academy success). However, there is a strong direct contribution (.3864) of AVER (the Predevelopmental program effect) on ZLAB. Now, we can proceed to observe indirect paths.

There are two dominant indirect routes to ZLAB:
(1) MINSTA → CSC COMP → AVER → ZLAB, and
(2) MINSTA → AVER → ZLAB.

Clearly, the second route (See Figure 3) is superior to the first. Essentially, this model demonstrates that minority status makes little direct contribution to ZLAB (Academy success) for predevelopmentals, but when channeled through AVER (the Predevelopmental program), minority status makes a strong indirect contribution to Academy success. The evidence supports the idea that the Predevelopmental program produces a differential contribution in terms of the trainee's ability to achieve Academy success according to the trainee's minority status.

Again, the efficiency of the model can be observed by the reproduced correlation matrix in Table 33, and the fit is very close.

TABLE 33. Efficiency Table for Model II.

	Min	CSC	Aver	ZLab
Min	1.000	.118	.343	.239
CSC	.118	1.000	.204	.161
Aver	.341	.204	1.000	.464
ZLab	.237	.160	.436	1.000

Correlations above the diagonal are original; those below the diagonal are reproduced from path coefficients.

Are there rival hypotheses that could account for this differential contribution by minority status? One possibility is that the predevelopmentals differed in ability by minority status prior to entering the Predevelopmental program. However, there is no significant difference (Table 11) in CSC COMP (the measure used to represent prior ability) by minority status. Another possibility: the difference is due to differences in educational level or experience level, rather than minority status. Again, there are no significant differences by educational level or experience level on either AVER or ZLAB (Tables 14,17,19,20), and Tables 4 and 5 show education and experience do not differ by minority status. Still another possibility involves sex differences. But Table 8 shows no significant sex differences. For illustrative purposes sex was introduced into the model in place of minority status to demonstrate the difference from the minority model (Figure 4). As viewed from the model, sex makes little to no direct contribution (-.033) or indirect contribution (.0156) through AVER on ZLAB scores. It makes a mild indirect contribution through CSC COMP scores (.129). Comparison of the "above" and "below" diagonals on the reproduced correlation matrix in Table 34 demonstrates a close fit.

The exploratory statistics selected for analyses do not suggest any further model testing. The following three statements summarize the results of the model testing.

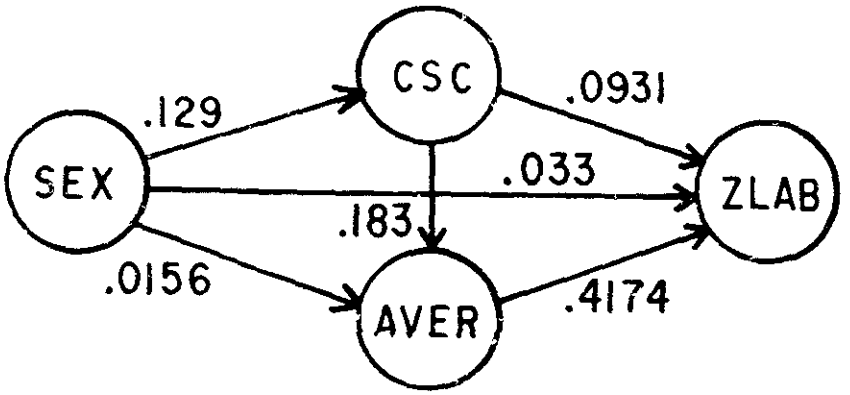

Figure 4. Path diagram for Model III. The influence of sex on the effect of Predevelopmental training on Academy success.

TABLE 34. Efficiency Table for Model III.

	Sex	CSC	Aver	ZLab
Sex	1.000	.129	-.011	-.028
CSC	.129	1.000	.204	.161
Aver	-.008	.191	1.000	.464
ZLab	-.026	.154	.436	1.000

Correlations above the diagonal are original; those below the diagonal are reproduced from path coefficients.

(1) Model I indicates that the Predevelopmental program (as measured by AVER) makes a significant addition to the trainee's ability to achieve success in the Academy (as measured by ZLAB) beyond his ability to achieve success in the Academy program prior to predevelopmental training (as measured by CSC COMP).

(2) Model II suggests that the contributions of the Predevelopmental program to the trainee's ability to achieve success in the Academy is differential according to minority status.

(3) Model III does not demonstrate a differential contribution by sex of the Predevelopmental program on the trainee's ability to achieve Academy success.

IV. Discussion of Results.

Model I indicates that the Predevelopmental program, overall, aids the disadvantaged to achieve success in the FAA Academy. This is an important finding, since it indicates support for the accomplishment of one of the primary goals of the program. Past studies (8,9) concluded that the Predevelopmental program was responsible for an increase in the number of disadvantaged persons in air traffic control, and these studies support the notion of a unique relationship between Academy success and the training they received in their Predevelopmental program. However, it should be pointed out concurrent with these statements about Model I, that this study is not designed to determine cost-effectiveness. Whether the benefit received from the program is worth the investment is another matter.

The implications of Model II are more difficult to assess. The tentative evidence of Model II supports the idea that nonminorities were aided by the program, but the extent of aid to minorities appears open to question. Several rival hypotheses were considered and rejected as explanations for this differential by minority status, viz initial ability (CSC scores), prior ATC experience, and educational level. The three major ability measurements, CSC COMP, AVER, and ZLAB, viewed independently by minority status suggests the possibility of another rival hypothesis. Tables 21, 15, and 11 show a significant difference by minority status for AVER and ZLAB; however, no significant difference is found in CSC scores by minority status.

This circumstance could obviously be due to several factors related to CSC scores. Since we had no quantitative data on CSC selection and testing procedures, direct contacts were made with the personnel in charge of CSC testing at FAA regional offices. Interviews with those persons yielded information that the Predevelopmental testing procedures included retesting those who scored below the cutoff point; a second or possibly a third testing might be allowed, sometimes with specially related remedial instruction given between the testing sessions. What effect might this situation have on the models?

Consider that observed test scores (O_i) consist of the true ability score (T_i) on that test and any error (E_i) involved in the measurement process.

$$O_i = T_i + E_i \qquad (1)$$

Repetitive testing of a group taking the higher scores on the average results in higher observed scores by adding to the error component. Consequently, scores inflated by the addition of error yield misleading estimates of potential success, since the observed scores are inaccurate estimates of the group's ability. Since retesting occurs predominantly for the group who score below the cutoff, the inflation of scores would occur predominantly at the lower end of the score continuum.

The effect of such a retesting procedure on Model I would not alter the conclusion based on that model, since a higher ability level based on CSC

scores would be partialled out of ZLAB scores prior to determining the contribution of the Predevelopmental program to what is left over in ZLAB after the partialling-out process. In this case (retesting), Model I would be a conservative estimate of the overall effect of Predevelopmental training on Academy success.

In terms of Model II, the results of a retesting procedure are quite different. It could well be that those retaking the CSC battery are in the minority status category. Retest scores would inflate the estimate of their ability and give the appearance of equal initial ability levels for minorities and nonminorities, when in fact their initial ability levels are quite different. This could account for the differential contributions by minority status in Model II. Likewise, it could account for the significant differences in Predevelopmental and ZLAB scores by minority status.

At present, data are not available on the selection process (in particular, CSC testing) so that determinations could be made of the effects of the selection procedures. However, it would appear economically and socially advantageous to perform such a study. First, suppose the predevelopmental failures at the Academy are primarily those who retook the CSC battery in order to score above the cutoff point. Use of the retesting procedure would not have gained the agency more minorities in ATC, rather the agency would have expended considerable resources only to fail them at the Academy, when those failing trainees could have been selected out initially. Second, such a study would help determine if a real differential does exist by minority status in the contribution predevelopmental training makes to Academy success. If in fact there is such a differential, the Predevelopmental training program should be assessed and redirected toward achieving the goal of enhancing the chances of minorities and women to be successful air traffic controllers.

There are at least four elements of this report that should be noted prior to generalizing the findings:

(i) Although the reported sample of trainees represents 3 years of students in the Predevelopmental program who have gone through Academy training between January 1976 and March 1977, the sample size is not ideal. Thus, the inferences drawn should be interpreted with some caution.

(ii) The second consideration is related to the first. In order to investigate the stability of the models, a cross-validation study should be performed as soon as more trainee data are available.

(iii) Causal models never prove causality (neither does any other statistical technique). Evidence is gathered which either supports or denies a proposition. The more evidence, the more sure the conclusions. Causal models such as path analysis offer evidence to infer causality.

(iv) Reliability and validity of measurement instruments:

a. Reliability.

1. CSC scores. A search through the available literature yielded no reliability information regarding these scores. A report by Mies (7) stated that such information was in an earlier report (4) by Education and Public Affairs, Inc. However, a close examination of the latter revealed no reliability data. It is perhaps safe to assume that the CSC has sufficient reliability information for the test to be in use.

2. ZLAB scores. Reliabilities were computed on ZLAB scores at CAMI for each input in 1976. The average of these coefficients (converting r's to Fisher's Z) was .73.

3. Predevelopmental scores. Reliability information was not available on predevelopmental scores; however, the average intercorrelation of the subscores (again, converting r's to Fisher's Z) was .44. This could be taken as an indication of the consistency of the measures.

b. Validity.

1. CSC scores. The 1970 Education and Public Affairs report (4) contains a thorough listing of validity studies on the CSC scores. The details of those studies will not be presented here, but the results were conflicting and inconclusive.

2. and 3. ZLAB and Predevelopmental scores. At present a field criterion has not been sufficiently developed for such a study. The intercorrelation between ZLAB and AVER is .464. This could be used as a coefficient of validity for predevelopmental scores.

V. Summary.

1. The results of this study indicate that Predevelopmental training, overall, enhances the predevelopmental's chances for success in ATC training at the FAA Academy. With this statement one is cautioned not to assume the program is particularly cost-effective or that the program could not be improved.

2. The study suggests further that the contributions of Predevelopmental training to Academy success could be differential according to minority status; however, this differential may be rooted in the procedures used for selection into the Predevelopmental program (particularly CSC retesting).

3. This study also demonstrates the need for a study into the selection procedures for the Predevelopmental program. Such a study could have both economic and social advantages.

References

1. Cobb, B. B., J. J. Mathews, and C. D. Lay: A Comparative Study of Female and Male Air Traffic Controller Trainees. FAA Office of Aviation Medicine Report No. FAA-AM-72-22, 1972.

2. Cobb, B. B., and P. L. Nelson: Aircraft-Pilot and Other Pre-Employment Experience as Factors in the Selection of Air Traffic Controller Trainees. FAA Office of Aviation Medicine Report No. FAA-AM-74-8, 1974.

3. Cobb, B. B., P. L. Nelson, and J. J. Mathews: The Relationships of Age and ATC Experience to Job Performance Ratings of Terminal Area Traffic Controllers. FAA Office of Aviation Medicine Report No. FAA-AM-73-7, 1973.

4. Education and Public Affairs, Inc.: Review and Evaluation of Present System for Selection of Air Traffic Controllers. Department of Transportation Report No. FA 70WA-2371, 1970.

5. Kerlinger, F. N., and E. J. Pedhazur: Multiple Regression in Behavioral Research, New York, Holt, Rhinehart, and Winston, Inc., 1973.

6. Lewis, M. A.: Unpublished reports provided to FAA Office of Personnel and Training by CAMI, 1977.

7. Mies, J. M., J. G. Colmen, and Oakie Domeneck: Predicting Success of Applicants for Positions as Air Traffic Control Specialist in the Air Traffic Service. Department of Transportation Report No. FA 75WA-3646, 1977.

8. Office of Personnel: ATCs Intake Study, 1971.

9. Office of Personnel: Evaluation of the "150" Program, 1973.

10. Trites, D. K., and B. B. Cobb: CARI Research on Air Traffic Control Specialists: Age, Aptitude, and Experience as Predictors of Performance. FAA Civil Aeromedical Research Institute, 1964.