Technical Report Documentation Page

1. Report No.	2. Government Accession No.	3. Recipient's Catalog No.
FAA-AM-82-6		

4. Title and Subtitle	5. Report Date
EFFECTS OF APPROACH LIGHTING AND VARIATION IN VISIBLE RUNWAY LENGTH ON PERCEPTION OF APPROACH ANGLE IN SIMULATED NIGHT LANDINGS	FEBRUARY 1982
	6. Performing Organization Code
	8. Performing Organization Report No.
7. Author(s) Henry W. Mertens and Mark F. Lewis	
9. Performing Organization Name and Address FAA Civil Aeromedical Institute P.O. Box 25082 Oklahoma City, Oklahoma 73125	10. Work Unit No. (TRAIS)
	11. Contract or Grant No.
	13. Type of Report and Period Covered
12. Sponsoring Agency Name and Address Office of Aviation Medicine Federal Aviation Administration 800 Independence Avenue, S.W. Washington, D.C. 20591	14. Sponsoring Agency Code

15. Supplementary Notes

Work was performed under tasks AM-D-79-PSY-67 and AM-A-80/81-PSY-85.

16. Abstract

Previous experiments in this laboratory have demonstrated illusions due to variations in both length and width of runways in nighttime "black hole" approaches. Even though approach lighting is not designed to provide vertical guidance, it is possible that cues from approach lights could interact with cues from runway lighting to reduce illusions due to variation in runway size. Two experiments were conducted to evaluate the effect of approach lighting on perception of approach angle in simulated night approaches. In the first experiment, 40 pilots made simulated visual approaches to a 150- by 6,000-ft runway with and without a 3,000-ft approach light system (ALSF-2). Pilots controlled a moving runway model to produce a constant "normal" angle of approach over the distance range of 23,000 ft to 8,000 ft from threshold. In the second experiment, 24 pilots made simulated approaches to a 150- by 6,000-ft runway which was either fully visible or which had lights of the upwind half occluded. In addition, a 1,400-ft abbreviated approach light system (SSALS) was used at three intensities. Decreasing the visible length of the runway by occulting lights of the far half increased mean generated approach angles from 2.2° to 2.7° in agreement with results of a previous experiment involving similar lengths of runways. Neither the presence of equal intensity approach lights nor uncomfortable glare from approach lights 20 times brighter than runway lights had an effect of practical significance on responses. These findings reinforce previous experimental demonstrations of the importance of runway size cues related to varying runway length, and also show that potential size cues provided by approach lights do not prevent illusions due to variations in runway size.

17. Key Words	18. Distribution Statement
Approach and Landing Visual Cues Approach Lighting Runway Image Size	Document is available to the public through the National Technical Information Service, Springfield, Virginia 22161.

19. Security Classif. (of this report)	20. Security Classif. (of this page)	21. No. of Pages	22. Price
Unclassified	Unclassified	19	

Form DOT F 1700.7 (8-72) Reproduction of completed page authorized

EFFECTS OF APPROACH LIGHTING AND VARIATION IN VISIBLE RUNWAY LENGTH ON PERCEPTION OF APPROACH ANGLE IN SIMULATED NIGHT LANDINGS

Introduction.

One of the most dangerous night visual approach situations is that in which only runway lights are visible on the ground, a situation often called the "black hole" by pilots. Recent experiments provide empirical evidence of illusions in the "black hole" situation including a general tendency to over-estimate approach angles to an unfamiliar runway (2,4,5) and a tendency for approach angles to vary directly with runway width and inversely with runway length (6). Those findings indicate the importance of runway image size and shape cues in the perception of approach angle in the "black hole." Those experiments did not, however, consider the potential importance of cues from approach lighting on perception in the "black hole." Even though approach light systems are not designed primarily to provide information for perception of approach angle magnitude, some assessments have suggested that they do (1,7,8). The present experiments tested that possibility.

Theoretically, it is possible for approach lighting to affect perception of approach angle magnitude in at least two ways. First, the additional information from approach lighting might be expected to reduce the above mentioned illusions that occur in the "black hole" and reduce response variability. Second, glare from overly bright approach lights might degrade visual information from runway lighting, causing systematic errors or increasing the variability of approach angles. Both possible interactions of approach and runway lighting were examined. Simulated night approaches in the "black hole" were studied with two different approach light systems in two experiments.

EXPERIMENT I

Experiment I compared approach angles in simulated nighttime "black hole" approaches to two runways. One runway had only edge and end lights; the second runway had, in addition, a simulation of the largest approach light system currently used in the United States, as well as touchdown zone

and centerline lighting which are typically used with that approach light system. The presence of approach lighting was evaluated with regard to effects on illusions involving overestimation of approach angles and with regard to effects on the variability of approach angle responses.

Method.

Subjects. Forty men, pilots with instrument ratings, served as subjects. They were between the ages of 25 and 60 years of age and were active in air carrier, military, or general aviation. All had 20/20 visual acuity at the far point, with correction if necessary. Their flying experience ranged from 200 to 22,000 total hours with a median of 1,750 hours and a semi-interquartile range of 1,950 hours. Sixteen pilots had heavy multiengine experience; all others flew light single and twin engine aircraft.

Apparatus. The nighttime approach scene was simulated with two models of runway and approach lighting systems. One modeled edge and end lights only, with lights colored appropriately. The other model also included approach lights simulating a 3,000-ft Category 2 approach light system (ALSF-2), without sequenced strobe lights (7). In both models, the runways had a simulated length of 6,000 ft and a simulated width of 150 ft. The models were created in 1,200:1 scale using a fiber optic technique described previously (3). The light box on which the models were mounted for experimental trials contained fluorescent sources, and the intensity of simulated white runway and approach lights was adjusted to simulate an average of 120 candelas. A schematic diagram of the apparatus is shown in Figure 1. It consisted of a runway model (R), the cart and track (C and T) on which the model runway moved toward the subject, and a mirror viewing system (M1 and M2). The model was viewed monocularly from an enclosed observation booth through a 12-mm aperature at B1. A head and chair rest were used to position and steady the subjects head during experimental observations. This arrangement enabled the model to move directly toward the observation point along a virtual optical path (O) which was 3° below the straight ahead direction (H). The slant of the model (θ), and hence, apparent approach angle, was controlled by the subject during the experimental trials. Model slant was measured and recorded to the nearest 0.1° throughout each experimental trial. Only the simulated runway lighting, and approach lighting when appropriate, were visible to the subject in the otherwise dark "black hole" scene. Targets A1 and A2, shown in Figure 1, were only present during optical alignment of the system.

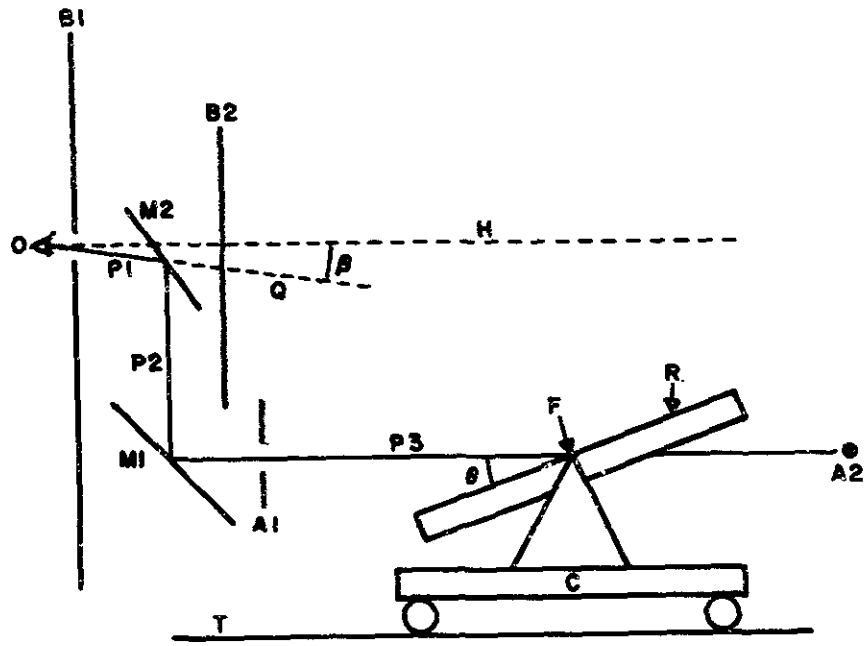

FIGURE 1. Schematic of apparatus (A1 and A2) removable targets for aligning optical system; B1 and B2, baffles; C, cart; F, rotation axis; H, horizontal line-of-sight; M1 and M2, mirrors; O, eye position; P1, P2, P3, segments of the optical axis; Q, apparent axis of radial motion; R, runway model; T, track; β, viewing angle; θ, model slant.

Procedure. The subject's task was to control the runway model as it moved toward him in order to produce what looked like a "normal" approach angle, and to produce the same angle on every subsequent trial. At the start of each trial, the dim overhead light in the booth went out, the model began moving toward the subject, and 5 s later the lights of the model were turned on as the model reached the simulated distance of 26,000 ft from threshold. The model was then controlled continuously by the subject as it moved toward the observation position over a simulated distance range of 26,000 ft to 8,000 ft from runway threshold. The simulated approach speed was a constant 125 knots.

After familiarization, involving two practice trials, four test trials were given. The order of presentation of the two runway models in these six trials was either ABAABB or BABBAA. Prior to the start of each trial the model was set at a simulated approach angle of 0.5° or 3.0°. The two starting angles were alternated, and the order of starting angles was reversed for half the subjects. No feedback concerning performance was given to any subject during the experimental period. The experimental session took approximately one-half hour for each subject.

Results.

Approach angle was the dependent variable. It was defined as the angle between the line-of-sight to the runway threshold and the plane of the runway model. Approach angles were measured for the present analysis at half-mile (3,000 ft) intervals from 20,000 ft to 8,000 ft from threshold.

The effects of approach lights and distance on generated approach angles are illustrated in Figure 2. Analysis of variance revealed statistically significant effects of approach lights ($p < .01$), distance ($p < .05$), and significant interaction of approach lights with distance ($p < .05$). Approach angles were 0.22° higher on the average when approach lights were not present. The significant main effect of distance was almost entirely due to the increase in approach angles with decreasing distance from threshold when approach lights were present. Approaches made with approach lights were 0.28° lower at 20,000 ft and 0.12° lower at 8,000 ft from threshold than when approaches were made without approach lights. The main effect of starting angle was also significant ($p < .01$) as was its interaction with distance ($p < .01$). Approach angles were 0.22° higher on the average when the simulated approach angle was set at 3.0° before the start of a trial than when that starting angle was set at 0.5°. The effect of starting angle was 0.32° at the 20,000 ft distance and was reduced to 0.18° at the nearest distance.

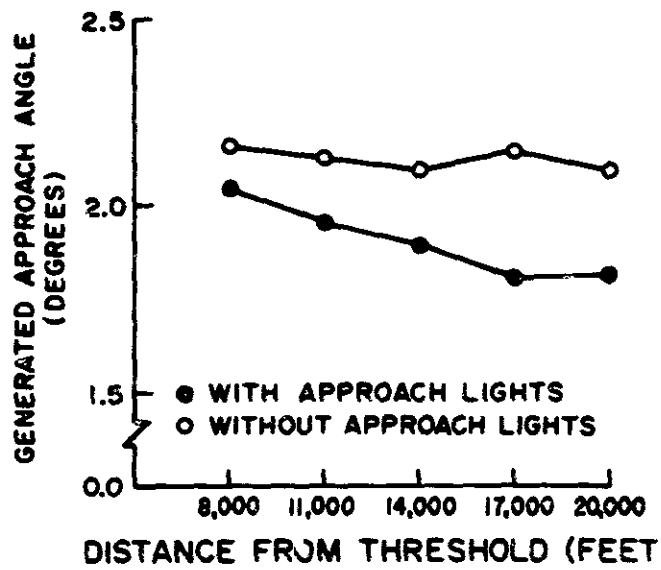

FIGURE 2. Mean approach angle in degrees as a function of approach lighting and distance.

The variability of responses between subjects (intersubject variability) in a given experimental condition was large. The average intersubject range of responses is shown in Table I as a function of approach lighting and distance. Intersubject range varied inversely with distance and tended to be about 0.8° higher in approaches made without approach lights. The same pattern of effects was apparent in the intersubject variances of responses which are shown in Table VII as a function of approach lighting and distance. An analysis of response variability involving statistical comparison of variances could not be performed on these data using the conventional F-ratio due to lack of independence of scores. Statistical evaluation of intersubject variability of responses with and without approach lights was, therefore, performed by converting each generated approach angle score to an absolute deviation from the group mean for each condition (i.e., each combination of approach lighting condition, starting angle, and distance). The effects of approach lighting and distance on absolute deviations are described in Table III. An analysis of variance of absolute deviation data indicated that there was no significant effect of approach lights on intersubject variability. The only significant effect was the main effect of distance ($p < .01$). Absolute deviations increased with decreasing distance from threshold.

TABLE I. Intersubject Range in Degrees as a Function of Approach Lighting and Distance from Threshold

Distance (feet)	Approach Lighting: ALSF-2	Approach Lighting: No ALSF-2	Mean
8,000	4.10	5.34	4.72
11,000	3.75	4.66	4.21
14,000	3.44	4.15	3.80
17,000	3.00	4.01	3.51
20,000	3.01	3.23	3.12
Mean	3.46	4.28	

DTIC COPY INSPECTED 2

Accession For
NTIS GRA&I ✓
DTIC TAB
Unannounced
Justification
By
Distribution/
Availability Codes
Dist | Avail and/or Special
A

TABLE II. Intersubject Variances in Degrees as a Function of Approach Lighting and Distance from Threshold

Distance (feet)	Approach Lighting: ALSF-2	Approach Lighting: No ALSF-2	Mean
8,000	1.18	1.02	1.10
11,000	.95	.90	.93
14,000	.90	.76	.83
17,000	.84	.63	.74
20,000	.61	.53	.57
Mean	.90	.77	

TABLE III. Intersubject Variability Measured with Absolute Deviations (in Degrees) as a Function of Approach Lighting and Distance from Threshold

Distance (feet)	Approach Lighting: ALSF-2	Approach Lighting: No ALSF-2	Mean
8,000	.85	.85	.85
11,000	.80	.78	.79
14,000	.74	.78	.76
17,000	.68	.73	.71
20,000	.61	.64	.63
Mean	.74	.76	

Variability within the responses of an individual subject (intrasubject variability) was assessed by using the difference score, or range, between approach angles produced by a subject in the 0.5° and 3.0° starting angle conditions in each approach lighting condition and at each distance. Intrasubject range data are given in Table IV as a function of approach lighting and distance. Intrasubject range was nominally higher on the average in approaches made without approach lights than in approaches with approach lights; means were 0.48° and 0.35°, respectively. Although the effect of approach lighting on intrasubject variability tended to vary inversely with distance, an analysis of variance of intrasubject range scores revealed that neither that interaction nor the main effects of distance or approach lighting were statistically significant.

Table IV. Intrasubject Range in Degrees as a Function of Approach Lighting and Distance from Threshold

Distance (feet)	Approach Lighting: ALSF-2	Approach Lighting: No ALSF-2	Mean
8,000	.37	.37	.37
11,000	.36	.41	.39
14,000	.35	.51	.43
17,000	.29	.53	.41
20,000	.38	.57	.48
Mean	.35	.48	

The relation of performance to the individual pilot's amount of flying experience and the size of aircraft he normally flew are also of interest. For the present analysis flying experience was measured by the total hours flown as pilot in command and the size of aircraft flown was categorized as light, less than 12,500 lbs, or heavy, greater than 12,500 lbs. The apsects of performance related to flying experience and aircraft size were (i) the mean approach angle for each subject over all conditions of the experiment, (ii) the difference between mean approach angles in approach lighting and no approach lighting conditions, and (iii) intrasubject variability of each subject as measured by the mean intrasubject range of responses over all experimental conditions. The correlations of flying experience and aircraft

size with those performance measures are given in Table V. None of these correlations was statistically significant. The slight positive relationship of flying experience with approach lighting effect ($r = .19$) and the slight negative relationship of aircraft size with mean approach angle ($r = -.22$) were the highest correlations observed.

Table V. Intercorrelations of Pilot Experience, Size of Aircraft Flown, and Subject Means for Generated Approach Angles (All Conditions), Approach Lighting Effect, and Intrasubject Range (N=40)

	Aircraft Size	Mean Angle	Approach Lighting Effect	Intrasubject Range
Total Flying Hours	.25	.08	.19	-.02
Aircraft Size		-.22	-.06	.11

Discussion.

The present experiment did not permit feedback to the pilots concerning their accuracy of response. Responses were analogous, therefore, to responses to unfamiliar runways. The present experiment corroborates previous findings regarding the tendency toward low approaches in the "black hole" situation. The mean generated approach angle over all subjects was 2.13° without approach lights and 1.90° with approach lights. These values are less than desired, and values as low as 0.6° occurred in approaches of two pilots. Fourteen pilots had mean approach angles, averaged over all conditions, of less than 1.5°. Low approach angles were generated in many cases which could have been catastrophic in actual approaches. Although some writers, mentioned above, have suggested that approach lights add significantly to information for perception of approach angle, the present experiment found that adding approach lights changed approach angles by only 0.2°, and actually lowered approach angles instead of raising them toward the desired level. Although that decrease in approach angles when approach lights were present was statistically significant, the magnitude of that effect is only slightly larger than the error of measurement inherent in measuring approach angle (0.1°) and is small compared to both intra- and intersubject variability of responses. This small negative effect of approach lights is, therefore, probably not of practical significance for perception of the magnitude of approach angle and is most likely offset by the value of approach lights in other visual tasks performed during approaches such as identifying runway location, runway alignment, roll guidance, and aimpoint estimation (1,7,8). The present finding also does not eliminate the possibility that approach lights may enhance the perception of approach angle magnitude at distances less than 8,000 ft from threshold, the closest distance simulated here.

The low correlations of total flying hours and size of aircraft flown with performance suggest that those two aspects of pilot experience were of relatively low importance in determining perception of approach angle in the present simulated approach situations. This issue is discussed further in the context of Experiment II below.

Both intersubject and intrasubject variability were lower when approach lighting was present. Although those effects were not statistically significant, response variability should receive attention in future research in terms of the possible ability of approach lighting to prevent oscillating, unstable approaches which could be as dangerous, or perhaps more dangerous than low stable approaches, especially in the nighttime "black hole" situation.

EXPERIMENT II

Experiment II had two purposes: First, the potential interaction of visual information from approach lighting with an illusion involving variation in runway length was examined. Second, the effect of approach lights was evaluated as a function of variation in approach light intensity.

Overly bright, glaring approach lights would be expected to reduce information in the runway scene by making details of both approach and runway lighting less visible. That might decrease illusions due to varying runway length or increase variability of responses. Experiment II also utilized a different approach light system. Whereas Experiment I simulated the largest system (3,000 ft), Experiment II simulated one of the smallest (1,400 ft). This modification permits study of length of approach light system as a factor.

Method.

Subjects. Twenty-four pilots who had participated in Experiment I were randomly selected to participate in Experiment II. There was an interval between experiments of at least 3 weeks. This group had the same range of flying experience as did the original group in Experiment I and had a median experience level of 1,600 hours with a semi-interquartile range of 1,900 hours. Nine were pilots of heavy aircraft and 15 were pilots of light, single and twin engine aircraft.

Apparatus. The apparatus was identical to that used in Experiment I with the exception that a short (1,400 ft) simplified approach light system (SSALS) was simulated. To achieve both variable intensity and as high an intensity as possible, 0.030 in diameter incandescent Pinlites (Model L15-45, REFAC Electronics Corporation, Winsted, Connecticut) were used to make individual lights of the simulated approach light system. Runway lights were modeled as before (Experiment I) using the fiber optic technique. The incandescent approach lights were powered by a regulated adjustable DC power supply which was set with the aid of a digital voltmeter

to achieve the simulated luminous intensity for individual approach lights of 120 and 2,500 candelas in addition to 0 candelas, or "off." Runway light intensity was always 120 candelas. The runway simulated was 150 ft by 6,000 ft with edge and end lighting only. When appropriate, the lights of the upwind half of the runway were covered with black velveteen to reduce the visible length of the runway to 3,000 ft.

Procedure. The subject's task was again to control the runway model as it moved toward him in order to produce the same "normal" approach angle on every trial. Viewing conditions, range of simulated distances, and simulated approach speed were the same as in Experiment I.

After four practice trials with a 150 ft by 6,000 ft runway without approach lights, the six combinations of three approach light intensities (0, 120, and 2,500 candelas) and two conditions of visible runway length (full 6,000 ft runway visible in one condition; lights of the upwind half occluded in the other condition) were presented. Each condition of approach light intensity and visible runway length was also presented with three starting angles, 0.5°, 3.0°, and 5.5°. The 18 combinations of approach light intensity, runway visibility, and starting angles were presented in random order. No feedback concerning performance was given during the experiment. Experimental sessions lasted approximately 2 hours for each subject.

Results.

The effects of approach lights, visible runway length, starting angle, and distance on generated approach angles were analyzed with analysis of variance for repeated measures. The significant main effects of approach lighting ($p < .01$) and visible runway length ($p < .01$) are illustrated in Figure 3. Their interaction was not significant. Mean approach angles were about 0.5° higher when only half the runway was visible. The effect was similar at all intensities of approach lighting. With a particular visible runway length, mean approach angles were similar when approach lights were turned off (zero intensity) and when their intensity was 20 times that of runway lights. When approach lights had intensity equal to runway lights, the presence of approach lights caused approach angles to average about 0.1° less when the full 6,000 ft runway was visible and about 0.2° less when only half the runway was visible. There was no significant interaction of either approach light intensity or visible runway length with distance.

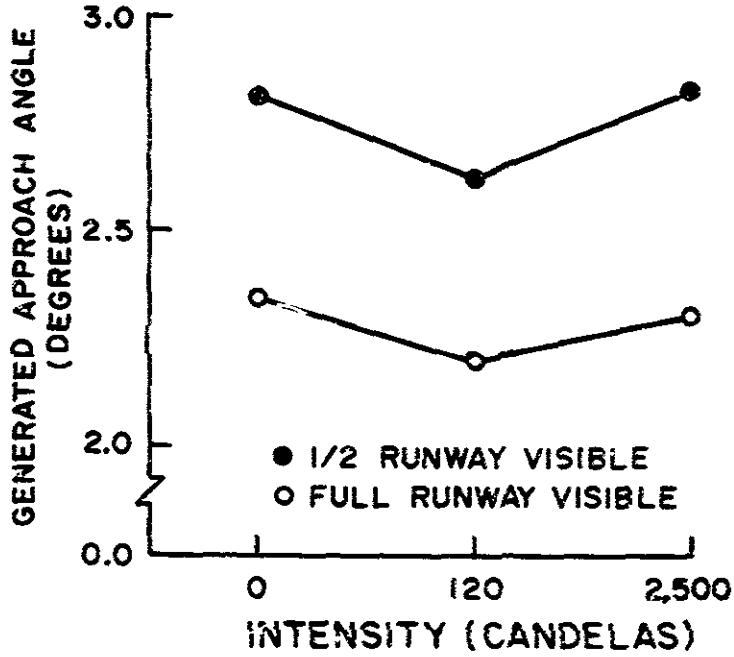

FIGURE 3. Mean approach angles in degrees as a function of approach light intensity and visible runway length.

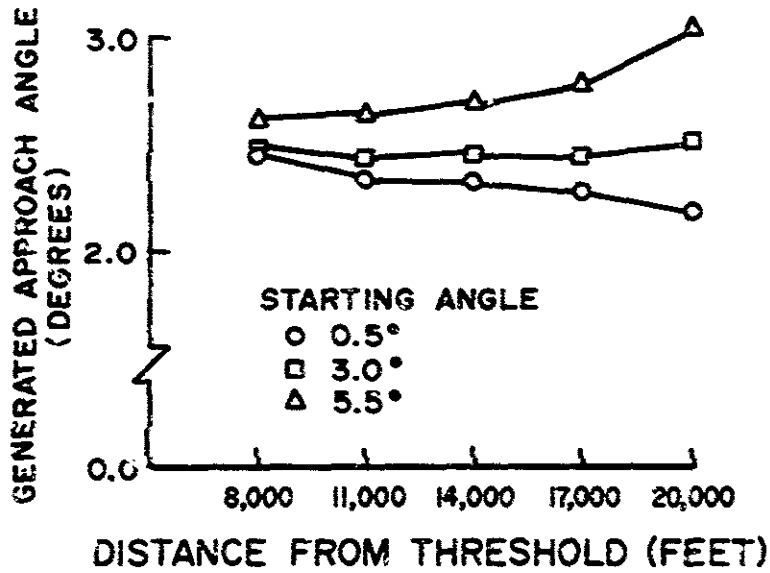

FIGURE 4. Mean approach angles in degrees as a function of starting angle and distance.

Both the main effect of starting angle and the interaction of starting angle with distance, which are illustrated in Figure 4, were statistically significant at the $p < .01$ level. The magnitude of the effect of starting angle decreased from approximately 0.8° at 20,000 ft to 0.2° at 8,000 ft from threshold.

The great variability of responses between subjects was again an important finding. The average range of responses between subjects over all conditions was 4.4°. Intersubject range is shown in Table VI as a function of approach light intensity, visible runway length, and distance. There was a tendency for intersubject range to vary inversely with distance and visible runway length. Intersubject range was also slightly lower (4.06°) when equal intensity approach lights were present than when approach lights were either not visible (4.46°) or when approach lights were 20 times as bright as runway lights (4.56°). The same pattern of effects was apparent in the intersubject variances of responses which are shown in Table VII as a function of approach lighting intensity, visible runway length, and distance.

TABLE VI. Intersubject Range in Degrees as a Function of Approach Lighting, Visible Runway Length, and Distance from Threshold

SSALS Intensity (Candelas)	Runway Length (feet)	Distance from Threshold (feet)				
		8,000	11,000	14,000	17,000	20,000
0	3,000	6.12	5.38	5.02	4.57	4.15
	6,000	4.51	4.24	3.99	3.41	3.15
120	3,000	5.66	4.92	4.39	4.06	3.65
	6,000	4.43	3.17	3.47	3.15	3.14
2,500	3,000	6.25	5.41	4.68	4.14	3.94
	6,000	5.54	4.70	3.91	3.69	3.30

TABLE VII. Intersubject Variance in Degrees as a Function of Approach Lighting, Visible Runway Length, and Distance from Threshold.

SSALS Intensity (Candelas)	Runway Length (feet)	Distance from Threshold (feet)				
		8,000	11,000	14,000	17,000	20,000
0	3,000	2.19	1.85	1.77	1.79	1.43
	6,000	1.09	1.03	1.00	0.93	0.92
120	3,000	1.86	1.61	1.34	1.23	0.97
	6,000	1.16	0.89	0.88	0.81	0.79
2,500	3,000	2.11	1.72	1.49	1.26	1.10
	6,000	1.54	1.21	1.06	0.96	0.91

Intersubject variability was evaluated statistically, as in Experiment I, by converting each generated approach angle score to an absolute deviation from the group mean for each condition (i.e., each combination of approach light intensity, visible runway length, starting angle, and distance). These data were analyzed by analysis of variance. The only significant effect revealed was the main effect of visible runway length. Absolute deviations are shown in Table VIII as a function of visible runway length and distance. Although the effect of distance on intersubject range was large, the effect of distance on intersubject absolute deviations was not statistically significant. The large intersubject range of responses between subjects in all conditions remains a most important finding in these data.

Intrasubject variability was assessed using the range of scores over the three starting angles in each condition of approach lighting intensity, visible runway length, and distance. The average intrasubject range within a particular combination of approach light intensity, visible runway length, and distance was 0.85°. Intrasubject range data are given in Table IX as a function of approach light intensity, visible runway length, and distance.

Effects of all variables were small and the only statistically significant effect ($p < .01$) in these data was the efffect of distance.

TABLE VIII. Intersubject Variability Measured with Absolute Deviations (in Degrees) as a Function of Visible Runway Length and Distance

Runway Length (feet)	Distance from Threshold (feet)				
	8,000	11,000	14,000	17,000	20,000
3,000	1.04	1.00	0.97	0.95	0.83
6,000	0.83	0.78	0.76	0.74	0.70

TABLE IX. Intrasubject Range in Degrees as a Function of Approach Lighting, Visible Runway Length, and Distance from Threshold

SSALS Intensity (Candelas)	Runway Length (feet)	Distance from Threshold (feet)				
		8,000	11,000	14,000	17,000	20,000
0	3,000	0.93	0.94	0.90	1.15	2.10
	6,000	0.71	0.69	0.75	0.86	1.07
120	3,000	0.80	0.72	0.63	0.74	0.99
	6,000	0.62	0.69	0.80	0.80	0.99
2,500	3,000	0.79	0.80	0.82	0.90	1.18
	6,000	0.65	0.58	0.65	0.85	1.05

The relation of performance to the individual pilot's amount of flying experience (total flying hours) and the size of aircraft he normally flew (heavy vs. light) was evaluated, as in Experiment I, by correlating those experience factors to (i) the overall mean approach angle for each subject (ii) the approach lighting effect (i.e., the difference between mean approach angles in the 0 and 120 candela approach lighting intensity conditions), and (iii) the intrasubject variability of each subject as measured by the mean intrasubject range for each subject. Those data are shown in Table X. The correlations of total flying hours with performance, in this subgroup of the 40 pilots who participated in Experiment I, were again not statistically significant, but the correlation of flying hours with mean approach angle ($r = .36$) was greater than the corresponding value ($r = .08$) for all 40 subjects in Experiment I. The negative correlations of aircraft size with mean approach angle and approach lighting and intrasubject effect were also larger in Experiment II, with statistical significance ($p < .05$) occuring in the correlations of aircraft size with mean approach angle ($r = -.42$) and aircraft size with approach lighting effect ($r = -.41$). These two correlations indicate trends involving lower approach angles for subjects who were pilots of larger aircraft and smaller decreases in approach angle in that group as a function of the presence of approach lights with intensity equal to runway lights.

TABLE X. Intercorrelations of Pilot Experience, Size of Aircraft Flown, and Subject Means for Generated Approach Angles (All Conditions), Approach Lighting Effect, and Intrasubject Range (N=24)

	Aircraft Size	Mean Approach Angle	ALS Effect	Intrasubject Range
Total Flying Hours	.122	.358	-.046	-.019
Aircraft Size		-.424	-.410	-.246

Discussion.

The effect of SSALS approach lights was a small but statistically significant decrease in mean generated approach angles, about 0.2°, in agreement with the effect of the ALSF-2 system studied in Experiment I. Arguments concerning the lack of practical significance of the effect of equal intensity approach lights given in the discussion of Experiment I also apply to the findings of the second experiment.

The effects of equal intensity SSALS lighting again decreased both intra- and intersubject variability of responses slightly, but not at a statistically significant level. Examination of raw data revealed that the tendency toward reduction of variability in both experiments was due to

lowering of responses in the high end of the response distribution without raising responses in the extreme low end of the distribution. Since it is the lowest approach angles that are of greatest concern for aviation, the effects of approach lighting on response variability, as in the case of effects on mean responses, may not be of practical significance at the distances studied here. The finding of nominally lower response variability when approach lighting was present was, however, consistent in two experiments. It is suggested that the effects of approach lighting on stability of approaches should be reexamined in future experiments dealing with shorter distances from threshold than the minimum 8,000 ft of the present experiments. At distances from threshold less than 8,000 ft, the danger potential of oscillating, unstable approaches would be greater, and the benefit of reduction in response variability due to approach lighting may also be greater.

The fact that the presence of the SSALS had a lesser effect when the full runway was visible than when half the runway was visible suggests that the effect of approach lighting may vary with the ratio of the lengths of approach and runway lighting. Two additional findings support this suggestion. First, both the ALSF-2 and SSALS, which differ greatly in length, produced approximately the same magnitude of effect (0.24° and 0.20° respectively) when the approach/runway length ratio was approximately the same. Second, the effect of adding the 3,000 ft ALSF-2 to the 6,000 ft runway produced an effect similar in magnitude to the effect of increasing runway length from 6,000 ft to 9,000 ft in another experiment (6). Although the effects of approach lighting on perception of approach angle in the present study were of doubtful practical significance, it is possible that larger effects might be generated with higher ratios of approach lighting length to visible runway length. Higher ratios might be encountered when fog reduces the visible runway length to lesser values than studied here, and would be most likely to occur with the longest (2,400 ft and 3,000 ft) approach light systems.

The effect of making approach lights 20 times brighter than runway edge lights was to eliminate the small decrease in mean approach angle that occurred with equal intensity approach lights. Mean approach angles increased at the highest approach light intensity, as did both intra- and intersubject variability, to the same levels that occured when approach lights were turned off. Although the high level of intensity used here did not decrease performance relative to the no approach light condition, it is likely that higher levels of intensity would. It is apparent that although the glare was uncomfortable (but not painful) in the present situation when the model was at nearer distances, the glare did not eliminate the important information for judgment of approach angle in the runway image. Since pilots normally have the ability to request changes in approach light intensity, it is not likely that higher glare levels would be tolerated in visual approaches.

The finding of low correlations of total flying hours with performance in both Experiments I and II suggests a relatively low importance of that

factor in determining perception of approach angle. The finding of statistically significant correlations between the type of aircraft flown with both mean approach angles generated and the magnitude of effect of approach lighting in Experiment II indicates greater importance of that factor. The significant negative correlation of type of aircraft flown by a pilot with the overall mean approach angle produced by that pilot may be explained by the fact that pilots of heavy aircraft normally fly lower approach angles than do pilots of light aircraft. Visual Approach Slope Indicators (VASI) and Instrument Landing Systems (ILS) at airports servicing heavy aircraft frequently have those systems set to produce lower angles of approach. For example the majority of pilots who flew heavy aircraft in this experiment flew heavy multiengine turbojet aircraft at a local military base where VASI and ILS aids were set to generate 2.5° approach angles. In contrast, pilots of light aircraft in this study flew from local airports where those aids were set to generate 3° approach angles. In addition, the negative correlations of type of aircraft flown with magnitude of approach lighting effects may reflect greater recent experience of pilots of heavy aircraft in flying approaches with approach lighting systems present. This suggested importance of recent experience in flying visual approaches is supported by findings of a previous study by Mertens and Lewis (6). That earlier work demonstrated that approach angles to a particular size of runway were higher when preceded by practice with a wider or shorter runway and lower when preceded by practice with a more narrow or longer runway. The findings of the above mentioned studies raise the question of whether or not the ability to make visual judgments of approach angle deteriorates as a function of time following practice in visual approaches. Future research on factors affecting the transfer of previous experience in visual approaches to subsequent approaches is needed.

The major finding of this study was that the visual information added to the nighttime visual approach scene by approach light systems did not have effects of practical significance on perception of approach angles at distances from runway threshold of 8,000 ft and greater. The presence of approach lighting did not reduce the tendency to overestimate approach angle and produce low approaches in the "black hole" situation and did not reduce illusions occurring as a result of differences in runway size. Statements in the literature that approach light systems do provide information for perception of approach angle magnitude, therefore, do not appear to be correct over the distance range studied here. The possibility that approach lighting may provide important information for perception of approach angle magnitude in the approach segment between 8,000 ft and threshold should be examined in future research. The value of approach lighting in other tasks performed during visual approaches such as identifying runway location, runway alignment, roll guidance, and aim point estimation, as mentioned above, makes approach lighting highly desirable, but the presence of approach lighting should not decrease the pilot's concern about illusions in "black hole" approaches which could lead to acceptance of dangerously low approach angles.

The present results corroborate previous findings regarding significant effects of runway length on perception of approach angle. These findings suggest that change in length of the visible segment of the runway due to fog may also have an effect on perception of approach angle. In that case, cues involving the variation of intensity with distance would also be affected by fog and may interact in the cues involving visible length. Future research on the effects of adverse weather involving reduced visibility should consider this interaction. Pilot training should also be developed to help pilots counteract visual illusions due to variation in runway width and variation in runway length, including reduction of visible runway length due to adverse weather.

REFERENCES

1. Iwataki, N., and H. Kansaku. 1973. Visual considerations concerning approach lights. Report No. NASA TT F-14, 667, National Aeronautics and Space Administration, Washington, D.C. (translation).

2. Lewis, M. F., and H. W. Mertens. 1979. Pilot performance during simulated approaches and landings made with various computer-generated visual glide-path indicators. Aviat. Space and Environ. Med. 50:991-1002.

3. Mertens, H. W. 1977. Laboratory apparatus for studying visual space perception of the pilot in simulated night approaches to landing. Percept. Mot. Skills, 45:1331-1336.

4. Mertens, H. W. 1978. Comparison of the visual perception of a runway model in pilots and nonpilots during simulated night landing approaches. Aviat. Space and Environ. Med. 49:1043-1053.

5. Mertens, H. W. 1981. Perception of runway image shape and approach angle magnitude in pilots in simulated night landing approaches Aviat. Space and Environ. Med. 52:373-386.

6. Mertens, H. W., and M. F. Lewis. Effect of different runway size on pilot performance during simulated night landing approaches. Aviat. Space and Environ. Med., in press.

7. U.S. Government. 1969. Handbook: Visual Guidance Lighting Systems. Advisory Circular No. 6850.2, Federal Aviation Administration, Department of Transportation, Washington, D.C. (p.2).

8. Wulfeck, J. W., A. Weisz, and M. W. Raben. 1958. Vision in Military Aviation. Technical Report No. 58-399, Wright-Patterson Air Development Center, Air Research Development Command, Wright-Patterson AFB, Ohio, (pp. 263-266).

*U.S. GOVERNMENT PRINTING OFFICE: 1982 369-486/728 1-3