ORDER

U.S. DEPARTMENT OF TRANSPORTATION
FEDERAL AVIATION ADMINISTRATION

8260.38A

415195

SUBJ: **CIVIL UTILIZATION OF GLOBAL POSITIONING SYSTEM (GPS)**

1. PURPOSE. This order provides criteria to be used in conjunction with Order 8260.3B, U.S. Standard for Terminal Instrument Procedures (TERPS), for establishing GPS nonprecision approach procedures. The guidance and criteria prescribed in this order are for nonprecision approaches. These criteria are in agreement with the result of data collected from tests conducted by the FAA and the joint tests by the FAA with the U.S. Air Force. These criteria provide for development of en route and nonprecision instrument procedures.

2. DISTRIBUTION. This order is distributed to the branch level in the Offices of Aviation Policy, Plans, and Management Analysis, Integrated Safety Analysis, Aviation System Standards, and Airport Safety and Standards; the Services of Flight Standards, Air Traffic Rules and Procedures, Research and Development, and Systems Maintenance; and the Program Director for Navigation and Landing; to the branch level in the regional Flight Standards, Air Traffic, Airway Facilities, and Airports Divisions; to the divisions of National Airway Systems Engineering, and the Regulatory Standards and Compliance at the Mike Monroney Aeronautical Center; to all Flight Inspection Area Offices, and the International Flight Inspection Office; to the Europe, Africa, and Middle East International Area Office; to all Flight Standards District Offices; to all Airway Facilities Sectors, and Sector Field Offices; and to all addresses on special distribution lists ZVS-827 and ZAT-423.

3. CANCELLATION. Order 8260.38, Civil Utilization of Global Positioning System (GPS), dated 12/14/93, is canceled.

SECTION 1. GENERAL CRITERIA

4. GENERAL. This order applies to instrument procedures based on GPS airborne equipment meeting the en route, terminal, and nonprecision approach requirements of TSO-C129, Airborne Supplemental Navigation Equipment Using the GPS. Criteria for multi-sensor equipment utilizing GPS not meeting TSO-C129 requirements are contained in Order 8260.3B, chapter 15.

5. TERMINOLOGY. The following terms are defined, as referenced in this order:

a. Alongtrack Distance (ATD) Fix. The ATD fix is an alongtrack position defined as a distance in nautical miles (NM), with reference to the next waypoint.

Distribution: A-W(POSAWXASFSTPRDSMNN)-3; A-X(FSATAFAS)-3; AOS-200(10 CYS); AMA-200(80 CYS); A-FFS-4(ALL); A-EU-1; A-FFS-7(STD); A-FAF-237(STD); ZVS-827; ZAT-423

Initiated By: AVN-210/AFS-420

b. Alongtrack (ATRK) Fix Displacement Tolerance. Fix displacement tolerance along the flight track.

c. Automatic Turn Anticipation. The capability of GPS airborne equipment to determine the point along a course, prior to a turn waypoint, where a turn should be initiated to provide a smooth path to intercept the succeeding course, and enunciate the information to the pilot.

d. Crosstrack (XTRK) Fix Displacement Tolerance. Fix displacement tolerance to the right or left of the designed flight track.

e. Instrument Approach Waypoints. Geographical positions, specified in latitude/-longitude used in defining GPS instrument approach procedures, including the feeder waypoint (FWP), the initial approach waypoint (IAWP), the intermediate waypoint (IWP), the final approach waypoint (FAWP), the missed approach waypoint (MAWP), missed approach turn waypoint (MATWP), and the missed approach holding waypoint (MAHWP).

f. MAWP. A waypoint used to designate the missed approach point (MAP) and used for construction of the final approach area.

g. Reference Waypoint. A waypoint of known origin used to compute the location of another waypoint.

h. Waypoint (WP). A predetermined geographical position defined by latitude/-longitude used for defining routes, terminal segments, and progress reporting purposes.

i. Waypoint Displacement Area. The rectangular area formed around and centered on the plotted position of a waypoint. This describes the region within which the aircraft could be placed when attempting to fly over the waypoint considering all system error components. Its dimensions are plus-and-minus the appropriate alongtrack and crosstrack fix displacement tolerance values found in table 1 (see appendix I).

6. PROCEDURE CONSTRUCTION. GPS procedural construction requirements are as follows:

a. Waypoints. A WP shall be used to identify the point at which GPS navigation begins and the point at which GPS navigation ends for the procedure. WP's shall also be established along GPS routes where the route changes course; at holding fixes; at other points of operational benefit, such as route junction points for clarity; at the final approach fix (FAF); and, at the MAP. Each WP shall be defined by latitude and longitude in degrees, minutes, and seconds developed to the nearest hundredth of a second.

b. Segments. GPS RNAV segments begin and end at a WP. However, the intermediate fix (IF) may be designated by an ATD fix, provided no turn is required at the IF.

(1) The segment area considered for obstacle clearance begins at the earliest point of the WP or ATD fix displacement tolerance area and, except for the final approach segment, ends at the plotted position of the next fix.

(2) Segment length, except for the final approach segment, is based on the distance between the plotted positions of the WP's or ATD fix defining the segment ends.

c. Waypoint Definition. When segments are aligned on a straight continuous course with no turns between approach segments prior to the MAWP, construct all preceding waypoints using the MAWP as the reference waypoint. When segments are not aligned on a straight course, use the MAWP as the reference waypoint to construct the FAWP; use the FAWP to construct preceding waypoints if preceding segments are on a straight course; or use the IWP as the reference waypoint to construct the IAWP when there is a turn at the IWP.

d. Course Change at Waypoints. The departure course at a waypoint is the bearing from that waypoint to the following waypoint. The arrival course at the waypoint is the reciprocal of the course from that waypoint to the preceding waypoint; and the difference between the departure course and the arrival course at a waypoint equals the amount of turn at that waypoint. See appendix 1, figure 1.

e. Turning Areas. Turning area expansion criteria shall be applied to all turns where the course change exceeds 15°.

f. Use of ATD Fixes. An ATD fix may be used in lieu of the IWP, when no course change is required at that point. Stepdown fixes shall be defined by ATD fixes. There is no maximum number of stepdown fixes in any segment, provided operational need, flyability, and waypoint displacement tolerance overlap restrictions are considered. Multiple stepdown ATD fixes shall be defined in whole nautical mile increments.

g. Positive Course Guidance. All GPS segments shall be based on positive course guidance. Positive course guidance is provided from WP to the next WP by a specified route. The "Direct to WP" missed approach procedure may be developed when considered to provide operational advantages and can be allowed within the obstacle environment, and positive course guidance cannot be assumed.

h. Minimum Safe Altitude. A common safe altitude shall be established for the entire area using the MAWP as the reference center.

7. IDENTIFICATION OF GPS INSTRUMENT APPROACH PROCEDURES (IAP). IAP's, based on GPS, are identified by the prefix "GPS," followed by the runway number/letter, as appropriate; i.e., GPS RWY 15, GPS-A.

8. HOLDING. Order 8260.3B, chapter 2, section 9, applies, except for paragraph 2924. When holding is at a GPS WP, the primary area of the selected pattern shall be large enough to contain the entire waypoint displacement area. To establish the area, refer to FAA Order 7130.3, Holding Pattern Criteria. Use 15 NM distance for terminal holding procedures and 30 NM distance for en route holding. Distance Measuring Equipment (DME) holding may be provided using direct distance to the holding waypoint in place of DME. Obtain leg-length information from Order 7130.3, appendix 1, holding course toward the navigational aid (NAVAID). Outbound-end reduction is not authorized.

SECTION 2. EN ROUTE CRITERIA

9. ORDER 8260.3B, chapter 15, section 1, Non-VOR/DME Basic Area, criteria shall apply to GPS feeder and en route segments. Paragraphs 1512b(1)(b) and 1512b(2)(b) apply. The criteria allowing these area widths to taper linearly within a 20-mile portion of the courses, prior to the IAWP, do not apply.

SECTION 3. TERMINAL CRITERIA

10. TERMINAL TURNING AREA EXPANSION. Obstacle clearance areas shall be expanded to accommodate turn anticipation. Outside expansion is not required for terminal procedures. Inside expansion applies only to turns of more than 15° at the IWP and the MATWP. The en route area widths satisfy turn expansion at the FWP and IAWP. Paragraph 17 satisfies early turn requirements for the MAWP. Determine the expanded area for the inside of the turn as follows:

a. Determine the ATRK displacement tolerance. See appendix 1, table 1.

b. Locate a point on the edge of the primary area on the inside of the turn at the distance of turn anticipation (DTA) prior to the earliest point the WP can be received. The DTA is measured parallel to the course leading to the fix and is determined by the turn anticipation formula: DTA = 2 X tan(turn angle ÷ 2).

c. From this point, splay the primary area by an angle equal to one-half of the course change until this line intersects the primary area of a succeeding segment. Depending on geometry, this may not be the primary area of the immediately following segment.

d. Construct a secondary area boundary parallel with the expanded turn anticipation primary area boundary a distance equal to the secondary area at the DTA point. Extend this secondary area boundary line until it intersects another secondary area boundary. Depending on procedure geometry, this may not be the secondary area of the immediately following segment.

e. In the case of small turn angles, the primary or secondary turn expansion lines may not intersect another primary or secondary area boundary. In this case, join the expanded areas at respective points abeam the succeeding waypoint.

f. Obstacle Evaluation of the Expanded Area. See appendix 1, figures 2, 3, 4 and 5. Evaluate the primary and secondary expansion areas using the required obstacle clearance (ROC) of the segment(s) following the turn waypoint. These general guidelines apply:

(1) Primary Area. Working from the primary area turn expansion line back toward the IWP along the inside edge of the intermediate segment of the turn, connect all points which outline the intermediate secondary area. In some cases, an additional area will be included, as shown in figure 5. This is a triangular shaped area, resulting from the splaying technique of the initial and intermediate areas connected by two points on the outside edge of the secondary areas and the point where the expansion splay line started. These areas will become primary areas for obstacle evaluation purposes. If more than one segment's secondary area is outlined, divide the area for ROC application at the point where the expansion splay line crosses into the second segment.

(2) Secondary Area. To evaluate the secondary turn expansion area, connect the ends of the secondary turn expansion line, B-C in figure 4, to the ends of the primary turn expansion line, A-D in figure 4, via all intervening points established by the intersection of initial and intermediate secondary areas. The area so enclosed, will be evaluated as secondary area of the reevaluated adjacent primary segment. The ROC for obstacles within this area is evaluated perpendicular to the primary area turn expansion line.

11. INITIAL APPROACH SEGMENT. The initial approach segment begins at the IAWP and ends at the IWP or the intermediate ATD fix.

a. Alignment. The angle of intercept between the initial and intermediate segments should be the minimum required for the procedure. Course change at the IWP shall not exceed 120°.

b. Course Reversal. When the procedure requires a course reversal, a holding pattern shall be established in lieu of a procedure turn. Paragraph 8 applies. If holding is established over the FAWP, the minimum holding altitude shall be not more than 300 feet above the altitude specified for crossing the FAWP inbound. The course change at the FAWP shall not exceed 15°. If holding is over the IWP, the minimum holding altitude shall permit descent to the FAWP altitude within the descent gradient tolerances prescribed for the intermediate

segment. The course change at the IWP shall not exceed 15°. Where a feeder segment leads to the course reversal, the feeder segment shall terminate at the plotted position of the holding WP.

c. Area.

(1) Length. The initial approach segment has no standard length.

(a) It shall be sufficient to permit any altitude changes required by the procedure; and,

(b) Entail the required DTA. The DTA shall be measured between the applicable waypoint displacement areas.

(c) The length should not exceed 50 NM, unless an operational requirement exists.

(d) When the IAWP is greater than 30 NM, direct distance from the airport reference point (ARP), the procedure should be annotated with a note to advise the pilot to ensure the approach mode has been activated.

(e) If a course change at the IAWP exceeds 90°, FAA Order 8260.3B, chapter 2, table 3, applies, to determine minimum length of the initial segment.

(2) Width.

(a) IAWP more than 30 NM from ARP. The width of the initial segment shall remain at en route width until a point on its course centerline is a distance of 30 miles (measured directly) from the ARP. The primary area then tapers from 90° abeam that point inward at 30° relative to centerline until reaching a width of 2 miles. The secondary area tapers to a width of 1 mile, beginning abeam the point of taper of the primary area and ending at a point abeam the primary area where it reaches its reduced width.

(b) IAWP at or less than 30 NM from ARP. The width of the initial segment shall remain at en route width until the latest position of the IAWP. The primary area tapers 90° from this point inward at 30° relative to centerline until reaching a width of 2 miles. The secondary area tapers to a width of 1 mile beginning abeam the point of taper of the primary area and ending at a point abeam the primary area where it reaches its reduced width.

(c) Initial Approach Segment with a Short Leg Length. When a 30° taper does not reach ± 2 miles width until beyond the IWP, construction is as follows (see appendix 1, figure 5):

1 On the outside of the turn, the primary and secondary area tapers connect **abeam** the plotted position of the **IWP** to the primary or secondary arcs, respectively. The radii of these arcs are 2 NM and 3 NM, respectively, centered at the **IWP**.

2 On the inside of the turn, the tapers connect to the 2 NM and 1 NM points, **respectively abeam** the plotted position of the **IWP**.

3 Turn anticipation **(TA)**:

(aa) Determine the **TA** area as described in paragraph **10**.

(bb) Note in figure 5 that, due to the width of the initial segment and the splay techniques mentioned in paragraph **10**, special evaluations techniques are needed. The **TA splay** extends **and** connects to the final segment. Therefore, some obstacles are **associated** with the intermediate segment and some with the final segment. Also, the triangular area is formed, i.e.; **G,H,A**.

(cc) Evaluate the area enclosed by lines connecting points **A,L,J,E,F,G,A**, as intermediate segment primary.

(dd) Evaluate the area enclosed by lines connecting points **L,D,E,E',J,J',L**, as final segment primary.

(ee) Evaluate the area enclosed by lines connecting points **A,B,B',L,A**, as intermediate segment secondary.

(ff) Evaluate the area enclosed by lines connecting points **B',C,D,L,B'**, as final segment secondary. Figure 5 contains blow ups of the referenced areas for clarity of detail.

(3) Obstacle Clearance. Refer to Order **8260.3B**, paragraph **232c**.

(4) Descent Gradient. Refer to Order **8260.3B**, paragraph **232d** and **288a**.

12. INTERMEDIATE SEGMENT. The intermediate segment begins at the **IWP** or an **ATD** fix and ends at the **FAWP**.

a. Alignment. The course selected in the intermediate segment should be aligned with the final approach course. When this is not practical, the course change at the **FAWP** shall not exceed **15°**.

b. Area. See appendix **1**, figure **6**.

(1) Length. The intermediate segment shall not be less than 5 NM, nor more than 15 NM in length. If a course change exceeds 90° at the IWP, Order 8260.3B, chapter 2, table 3, applies.

(2) Width.

(a) Primary area is 2 NM each side of centerline from the earliest point of the IWP, to a point 4 miles from the FAWP. From that point, it tapers to 1 NM each side of centerline at the plotted position of the FAWP.

(b) Secondary area, 1 NM each side of the primary area.

c. Obstacle Clearance. A minimum of 500 feet of obstacle clearance shall be provided in the primary area of the intermediate approach segment. In the secondary area, 500 feet of obstacle clearance shall be provided at the inner edge, tapering to zero feet at the outer edge.

d. Descent Gradient. The optimum descent gradient in this segment is 150 feet per mile. The maximum descent gradient is 300 feet per mile.

13. FINAL APPROACH SEGMENT. The final approach segment begins at the FAWP and ends at the MAWP. Where stepdown fixes are established, they shall be defined as ATD fixes. See paragraph 6f.

a. Alignment.

(1) Straight-in. For a straight-in approach, the alignment shall not exceed 15° from the runway centerline (RCL) extended. Optimum alignment is coincident with the RCL. Where the alignment is 3° or less from the RCL, the optimum alignment is to the runway threshold. Where the alignment exceeds 3° from the RCL, the optimum alignment is to a point 3,000 feet from runway threshold on the RCL. Where operationally required, optional alignment is authorized to a point between, and including, the runway threshold and a point 3,000 feet prior to the runway threshold on the RCL, provided alignment is within 15° of the RCL. See appendix 1, figure 7.

(a) Except where the alignment is to the runway threshold, the mandatory location of the MAWP is at the intersection of the final approach course and the RCL.

(b) Where the alignment is to the runway threshold, the optimum location of the MAWP is at the threshold, with optional location of the MAWP anywhere along the final approach course between the threshold and the FAWP.

(2) Circling Alignment. The optimum final approach course alignment is to the center of the landing area, but may be to any portion of the usable landing surface. The

optional location of the MAWP is anywhere along the final approach course between the FAWP and the point abeam the nearest usable landing surface. See appendix 1, figure 8.

b. Area. The area (straight-in and circling) considered for obstacle clearance starts at he earliest point of the FAWP displacement area and ends at the latest point of the MAWP displacement area or the runway threshold or a point abeam the runway threshold, whichever is encountered last. See appendix 1, figures 9 and 10. The area extended to threshold beyond the MAWP, when required, has a constant width for both primary and secondary areas and those lateral dimensions equal the lateral dimensions at the MAWP. See figure 10.

(1) Length. The length of the final approach segment is measured from the plotted position of the FAWP to the runway threshold or a point abeam the threshold. The optimum length is 5 NM. The maximum length is 10 NM. The minimum length shall provide adequate distance for an aircraft to meet the required descent and to regain course alignment when a turn is required over the FAWP. Use table 2 (see appendix 1) to determine the minimum length of the final approach segment. A segment exceeding 6 miles in length should incorporate a stepdown fix, provided a decrease of at least 60 feet in the MDA or a reduction to visibility minimums can be achieved.

(2) Width.

(a) The final approach primary area is centered on the final approach. It is 1 NM wide on each side of the course at the earliest point of the FAWP displacement area. This width remains constant until the latest point of the FAWP displacement area. It then tapers to the width of the XTRK displacement tolerance at the latest point of the MAWP displacement area. See table 1 for fix displacement tolerance values.

(b) A secondary area is 1 NM wide at the FAWP paralleling the primary area each side of the displacement area, then tapers to a width of 1/2 NM each side of the primary area at the latest point of the MAWP displacement area.

c. Obstacle Clearance.

(1) Straight-in. The minimum ROC in the primary area is 250 feet. In the secondary area 250 feet of obstacle clearance shall be provided at the inner edge, tapering uniformly to zero feet at the outer edge.

(2) Circling. A minimum of 300 feet of ROC shall be provided in the circling approach area. Order 8260.3B, paragraph 260, applies.

d. Descent Gradient. The optimum descent gradient is 300 feet per mile. Where a higher gradient is necessary, the maximum permissible descent gradient is 400 feet per mile.

SECTION 4. MISSED APPROACH

14. MISSED APPROACH SEGMENT. The missed approach segment begins at the MAWP and ends at a point designated by the clearance limit. These criteria consider two methods of designing missed approaches. They are identified as “Route” or “Direct.”

a. Route. Positive course guidance provided by GPS is required throughout the missed approach segment. The length of the segment is measured point-to-point between the respective plotted positions of the waypoints throughout the missed approach procedure.

(1) A WP is required at the MAP and at the end of the missed approach procedure.

(2) A straight, turning, or combination straight and turning missed approach procedure may be developed.

(3) Turns should be the minimum required for the procedure and shall not exceed 120° in any case.

(4) A minimum segment length is required to allow the aircraft to stabilize on course immediately after the MAP. See appendix 1, table 3, for minimum distances required for each category of aircraft based on course changes.

(5) For the combination straight and turning missed approach, the distance between the latest point the MAWP displacement area and the earliest point the turn WP displacement area shall be sufficient to contain the length of turn anticipation distance required. This segment shall be aligned within 15° or less of the extended final approach course.

b. Direct. A direct missed approach may be developed to provide a method to allow the pilot to proceed to a waypoint that is not connected to the MAWP by a specified course. Positive course guidance is not assumed during the entire missed approach procedure.

(1) A WP is required at the MAP and at the end of the missed approach procedure.

(2) A straight, turning, or combination straight and turning missed approach may be developed.

(3) The combination straight and turning missed approach procedure shall include a climb from the MAP to a specified altitude. The end of the straight section shall be established by an altitude, and the segment shall be aligned with the final approach course. The length of the straight section shall be determined by subtracting the lowest

minimum descent altitude (MDA) of the procedure from the height of the turning altitude in the missed approach and multiplying by 40. The distance is measured from the latest point the MAWP can be received.

(4) Turns may exceed angles of 120°.

15. MISSED APPROACH POINT. The MAWP shall be located on the final approach course and shall be no further from the FAWP than the runway threshold. For courses that meet circling-only criteria, the MAWP shall be located on the final approach course no further from the FAWP than a point abeam the runway centerline of the first usable landing surface.

16. STRAIGHT MISSED APPROACH. Straight missed approach criteria are applied when the missed approach course does not differ more than 15° from the final approach course.

a. Area. See appendix 1, figure 11.

(1) The area starts at the earliest point of the MAWP displacement area, and its width is equal to that of the MAWP XTRK error, plus 1/2 mile. When positive course guidance is provided, secondary area reduction is permitted and shall begin at the earliest point of the MAWP displacement area.

(2) The area expands uniformly to a width of 6 miles each side of the course line at a point 15 flight-track NM from the plotted position of the MAWP. When positive course guidance is provided, the secondary areas splay linearly from a width of 1/2 mile at the earliest point of the MAWP displacement area, to a width of 2 NM at the end of the 15-mile area. See appendix 1, figure 12.

(3) When a turn of 15° or less causes the outside edge of the primary boundary to cross inside the lateral dimensions of the MAWP displacement area, or the secondary boundary crosses inside the lateral dimensions of the MAWP area, that boundary line and/or the associated secondary boundary line, if affected, are constructed from the appropriate corners of the lateral dimension of the area abeam the latest point of the MAWP area. See appendix 1, figure 13.

b. Obstacle Clearance. In the primary area, no obstacle may penetrate the 40:1 surface which begins at the edge of the MAWP displacement area identified as the line D-A-B-C in figures 12 and 13. For the triangular shaded area in figure 13, resulting from a skewed course of 15° or less, the 12:1 slope is measured from point A. The obstacle slope is established by measuring the shortest distance from the line D-A-B-C to the obstacle. The height of the missed approach surface at its beginning slope is determined by subtracting the required final approach obstacle clearance and adjustments specified in Order 8260.3B, paragraph 323, from the MDA. In the secondary area, no obstacle may

penetrate the 12:1 surface extending upward and outward from the 40:1 surface at the edge of the inner boundaries at a right angle to the missed approach course.

17. TURNING MISSED APPROACH. Turning missed approach criteria apply whenever the missed approach course differs by more than 15° from the final approach course.

a. Area.

(1) Zone 1 begins at a point abeam the latest point the MAWP can be received. See appendix 1, figures 14 and 15.

(2) The turning missed approach area should be constructed by the methods described in Order 8260.3B, paragraph 275, except as follows:

(a) The radii for the outer boundary is constructed from a baseline at the latest point the MAWP can be received.

(b) Where the width "d" of the final approach area at the latest point the MAWP can be received is less than or equal to the value of the radius of the outer boundary R in Order 8260.3B, table 5, use "narrow final approach area at the MAWP" construction methodology. See figure 14.

(c) Point C_q, for turns of 90°, or less, connects to the MAWP displacement area at point C, which is located at the earliest point the MAWP can be received. See appendix 1, figures 15 and 16.

(d) Point C_A, for turns more than 90°, connects to the corner of MAWP fix displacement area at the non-turn side at point D at the earliest the MAWP can be received. See appendix 1, figures 17 and 18.

(e) Point C_1, for turns which expand the missed approach area boundary beyond line E-D-Z, connects to point E. See appendix 1, figure 19.

(f) Point C_1, for turns which expand the missed approach area boundary beyond line E-Z (parallel to the final approach course line), connects to point E_1, tangent to the obstacle boundary arc. See appendix 1, figure 20.

(g) The division line between zones 2 and 3 connects point C and projects perpendicular to the FAC to far boundary of the missed approach area.

b. Obstacle Clearance. The 40:1 obstacle clearance surface begins at the edge of the MAWP displacement area. The height of the missed approach surface over an obstacle in zone 2 is determined by measuring a straight-line distance from the obstacle to the nearest

point on the D-A-B-C line and computing the height based on the 40:1 ratio. See figures 17 through 20. The height of the missed approach surface in zone 3 is determined by measuring the distance from the obstacle to point C, as shown in figure 17, and computing the height based on the 40:1 ratio. The height of the missed approach surface over point C for zone 3 computations is the same height as the MDA, less adjustments in Order 8260.3B, paragraphs 323a, b, and c.

18. COMBINATION STRAIGHT AND TURNING MISSED APPROACH.

a. Area.

(1) Section 1 is a portion of the normal straight missed approach area and is constructed as specified in paragraph 16. See appendix 1, figure 21. The end of section 1 is based on a turn at a WP, or a climb to an altitude prior to commencing a turn.

(2) GPS Route Missed Approach Procedure. A WP is used to base the length of section 1. Refer to paragraph 10a(2) for computation of DTA (figures 21 and 22).

(a) Secondary area reductions apply, except where the turn exceeds 90°, when the reduction applies only on the non-turning side. See appendix 1, figure 22.

(b) A turn anticipation area shall be constructed at the turn WP.

(c) Construction of Sections 1 and 2.

1 Points F, T_1, T_2, and T_3 or J represent the end of section 1. For turns of 90° or less, point C_1 connects to point J. See figure 21. For turns of more than 90°, point C_1 of section 3 connects to point T_2. See figure 22.

2 The radius for the obstruction boundary is measured from the base line at the latest point of the turn WP displacement area.

3 The outer boundary line connects tangentially to the outside of the boundary arc. Then, the secondary area boundary connects to that line at the point abeam the plotted position of the turn WP. See figures 21 and 22.

(3) GPS Direct Procedure. For a GPS direct missed procedure, the end of section 1 is based on a climb to altitude, and secondary area reductions are not applied.

(a) The end of section 1 is established as described in paragraph 14b(3). Positive course guidance is not assumed, and secondary area obstruction clearance shall not be applied. The end of section 1 is represented by line H-T_3. See appendix 1, figure 23.

(b) Construction of Sections 2 and 3.

1 A base line extension of line G-D-C separates sections 2 and 3. When point C_1 is established prior to the base line, C_1 connects to point C. See figure 23.

2 When C_1 is established beyond the base line, but inside line G-Z, C_1 connects to point G. G-Z is established parallel to the final approach course line. See appendix 1, figure 24. When point C_1 is established beyond an area of line G-Z, C_1 connects to point H. See appendix 1, figure 25.

3 When point C_1 is established beyond an area of line H-Z, C_1 connects to point K, a tangent point on the boundary arc. H-Z is established parallel to the final approach course line. See appendix 1, figure 26.

4 In section 2, use "wide methodology" when constructing the outer turning boundaries. See figures 24, 25, and 26.

b. Obstruction Clearance.

(1) GPS route missed approach of turns 90° or less.

(a) Obstacles in section 2 are evaluated based on the shortest distance in the primary area from the obstacle to any point on line T_2-T_3. See figure 21.

(b) Obstacles in section 2b are evaluated based on the shortest distance in the primary area from the obstacle to point T_3 through point J. Section 2b is divided from section 2 with a line projected from J perpendicular to the missed approach course in section 1 to limits of missed approach area. See figure 21.

(2) GPS Route Missed Approach of Turns More than 90°. Obstacles in sections 2 and 3 are evaluated based on the shortest distance in the primary area from the obstacle to any point on line T_2-T_3. See figure 22.

(3) GPS Direct Procedure. Obstacles in section 2 are evaluated based on the shortest distance from the obstacle to any point on line G-H-T_3-X. Obstacles in section 3 are evaluated on shortest distance from the obstacle to point X. See figures 24, 25, and 26.

(4) The height of the missed approach surface over an obstacle in section 2 is determined by measuring the shortest distance from the obstacle to the nearest point on the T_2-T_3 line for the route missed approach procedure and the nearest point on the G-H-T_3-X line for the direct missed approach procedure. Compute the height of the surface by using the 40:1 ratio from the height of the missed approach obstacle surface at the end of

section 1. The height of the obstacle surface at the end of section 1 is determined by computing the 40:1 obstacle surface slope beginning at the height of the missed approach surface measured from the latest point of the MAWP displacement area.

(5) The height of the missed approach surface over line T_2-T_3 for section 3 computations is the height of the MDA less adjustments in Order 8260.3B, paragraphs 323a, b, and c, plus a 40:1 rise in section 1. See figure 22.

(6) The height of the missed approach surface over point X for section 3 computations is the height of MDA less adjustments in Order 8260.3B, paragraphs 323a, b, and c, plus a 40:1 rise in section 1, as measured from line A-B to end of section 1. See figure 26.

19. CLEARANCE LIMIT. The missed approach procedure shall specify an appropriate clearance limit. The MAHWP shall be suitable for holding. Clearance limit WP's shall meet terminal WP displacement area criteria from table 1.

SECTION 5. GPS MINIMUMS

20. APPROACH MINIMUMS. Order 8260.3B, chapter 3, section 3, applies. Use one statute mile for all categories in table 6A.

SECTION 6. DIRECTIVE FEEDBACK INFORMATION

21. INFORMATION UPDATE. Any deficiencies found, clarification needed, or improvements to be suggested regarding the content of this order shall be forwarded for consideration to:

DOT/FAA
ATTN: Standards Development Branch, AVN-210
P.O. Box 25082
Oklahoma City, OK 73125-5028

Your Assistance is Welcome. FAA Form 1320-19, Directive Feedback Information, is included at the end of this order for your convenience. Use the "Other Comments" block of this form to provide a complete explanation of why the suggested change is necessary.

William J. White
Deputy Director, Flight Standards Service

APPENDIX 1. FIGURES AND TABLES

Figure 1. Course Change at Waypoints, Paragraph 6.

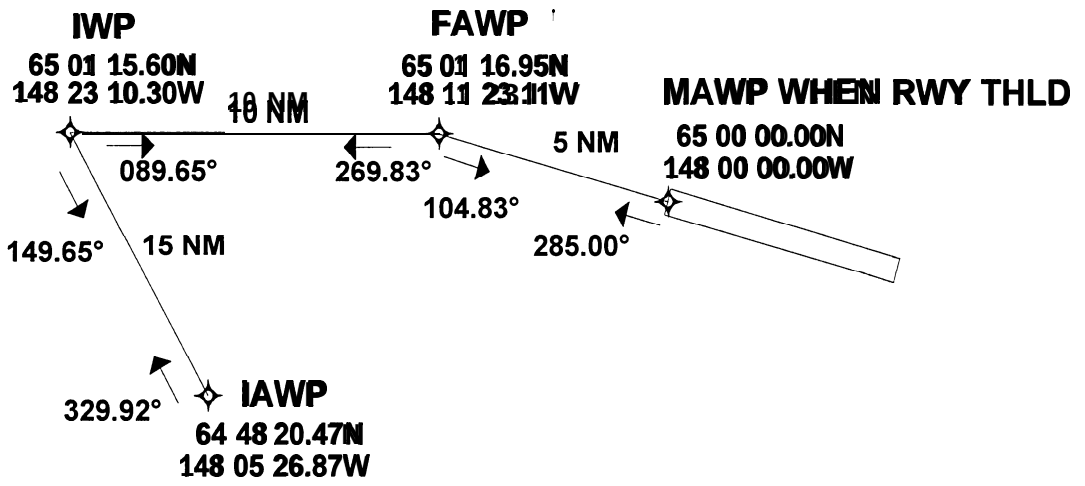

At IWP:

At IWP Departure Course	=	89.65°
Arrival Course 149.65 + 180	=	329.65°
Course Change	=	120.00°

At FAWP:

Departure Course	=	104.83°
- Arrival Course 269.83 - 180	=	89.83°
Course Change	=	15.00°

Figure 2. Turn Area Expansion, Paragraph 10 and Feeder Route Connecting to GPS IAWP at or Less than 30 NM Distance from ARP, Paragraph II.

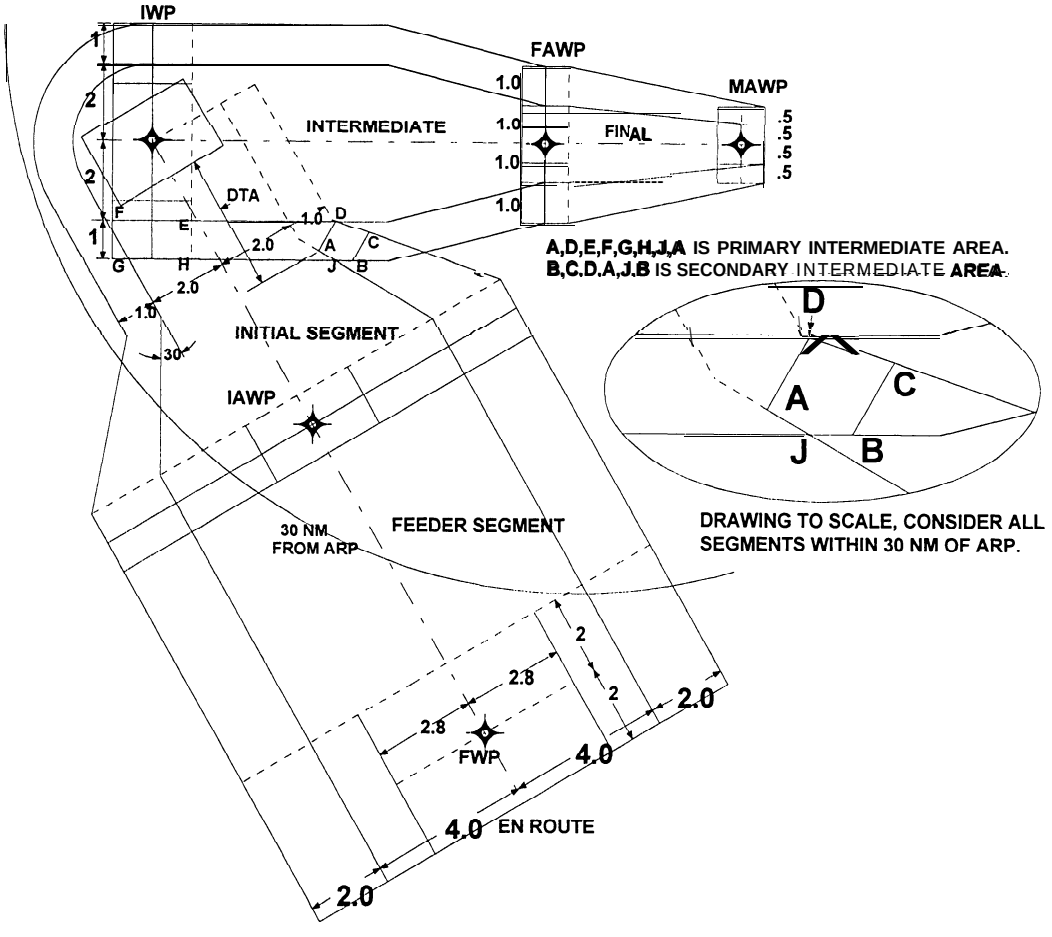

Figure 3. Initial-Intermediate Connection and Turn Anticipation Area, Paragraph 10 and IAWP 30 NM or Less from ARP, Paragraph 11.

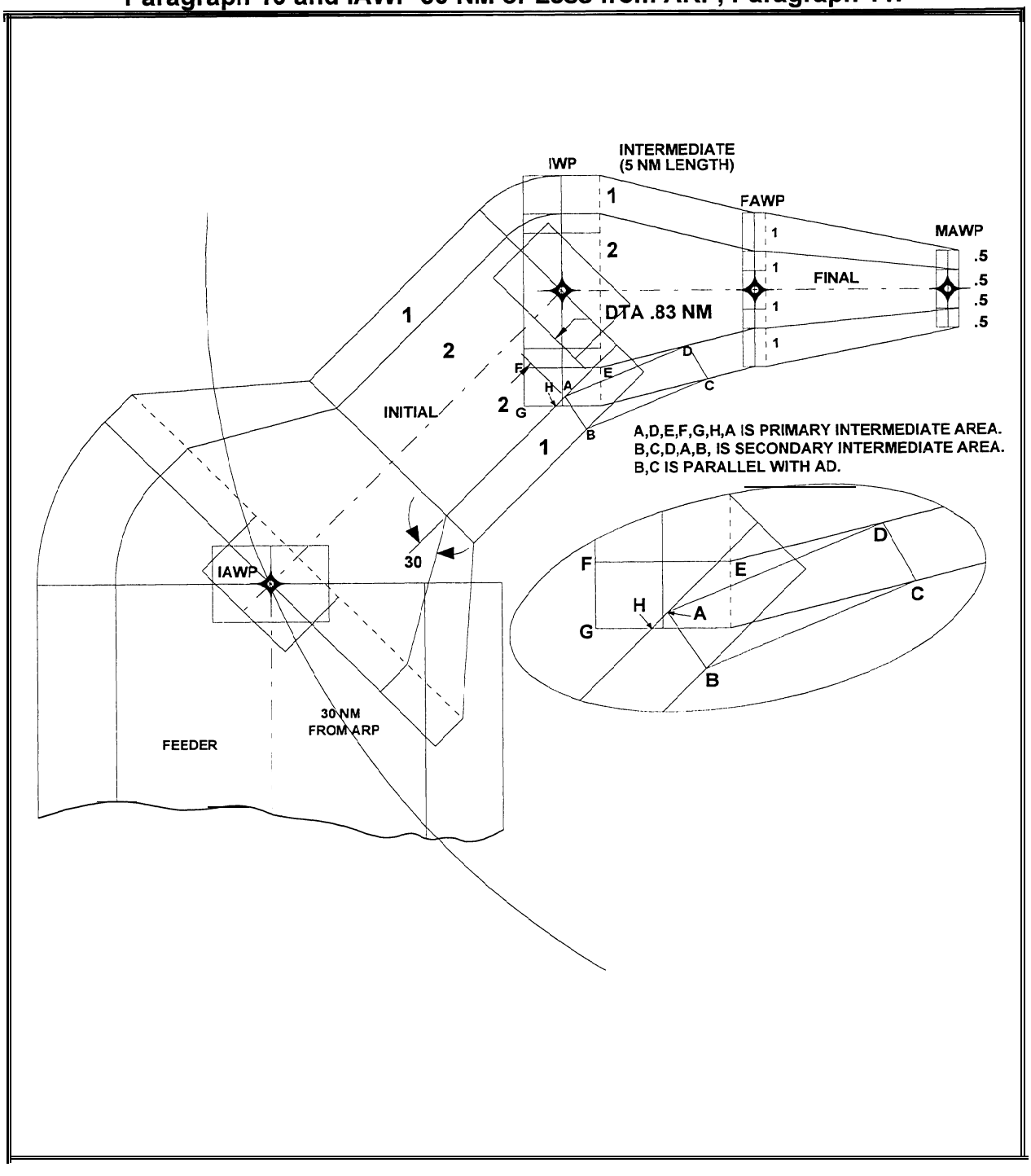

Figure 4. Turning Areas Expansion, Paragraph 10.

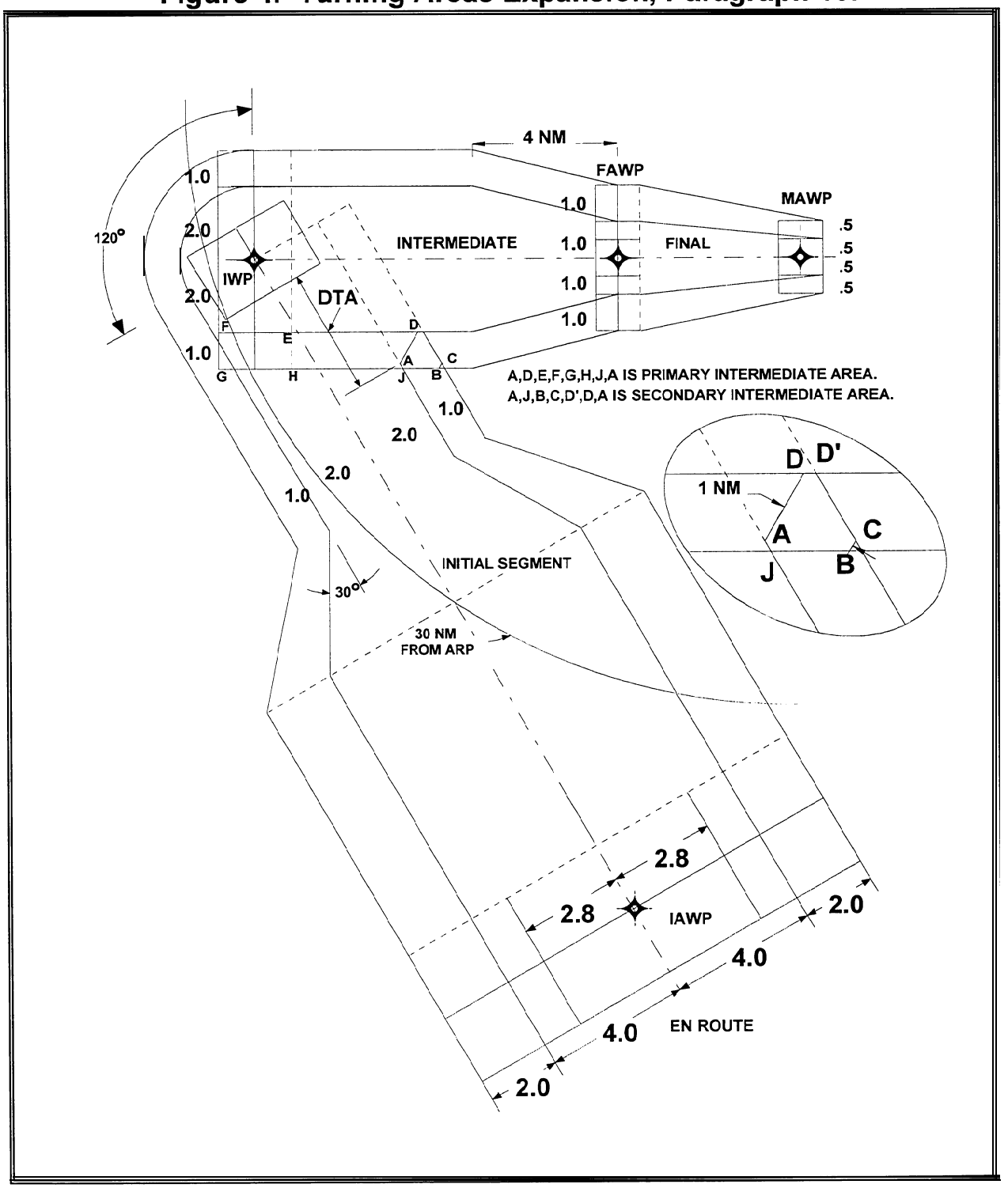

Figure 5. Feeder Route to IAWP, Short Initial Segment, and Turn Expansion Inside FAWP.

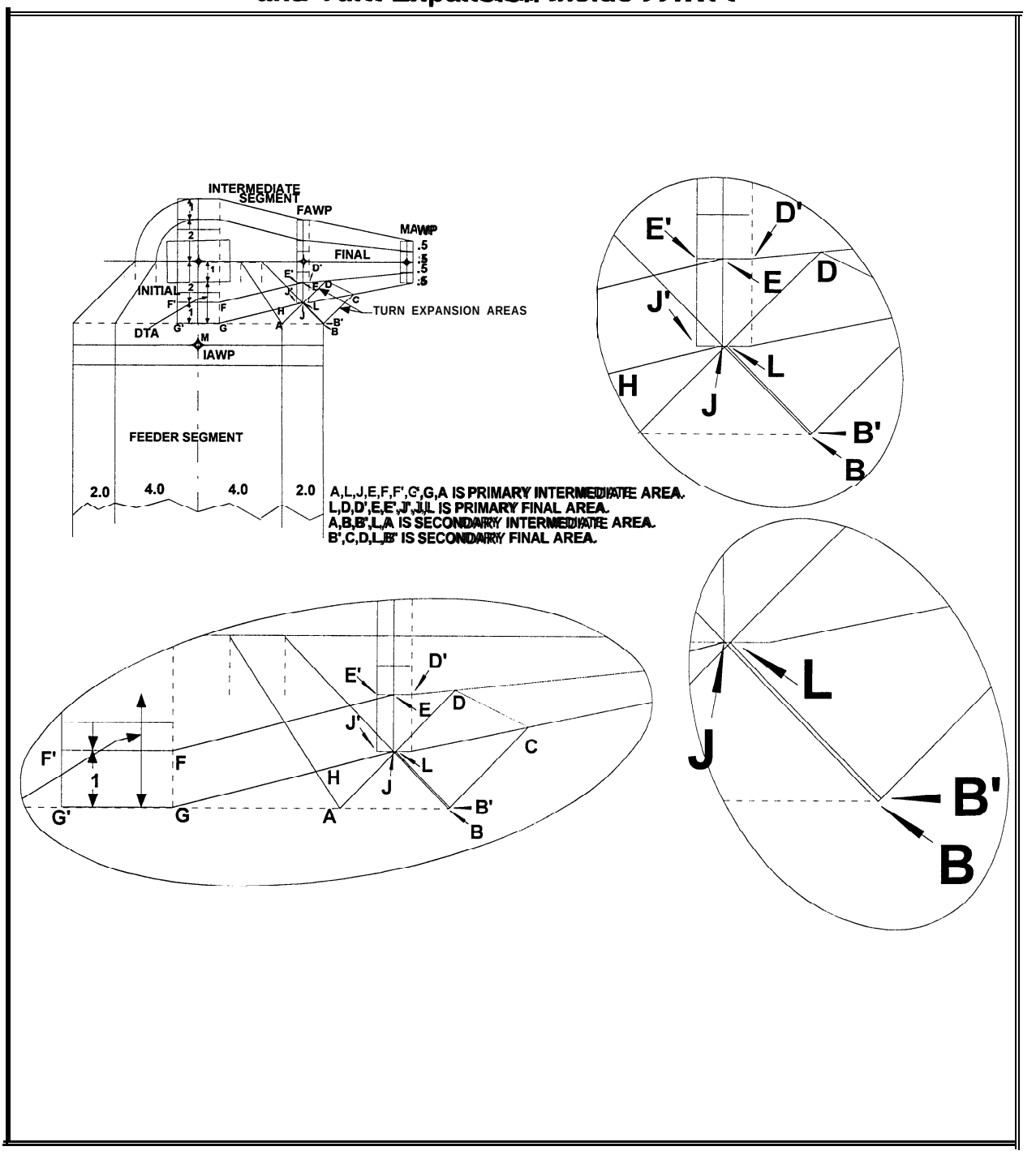

Figure 6. Intermediate Area, Paragraph 12.

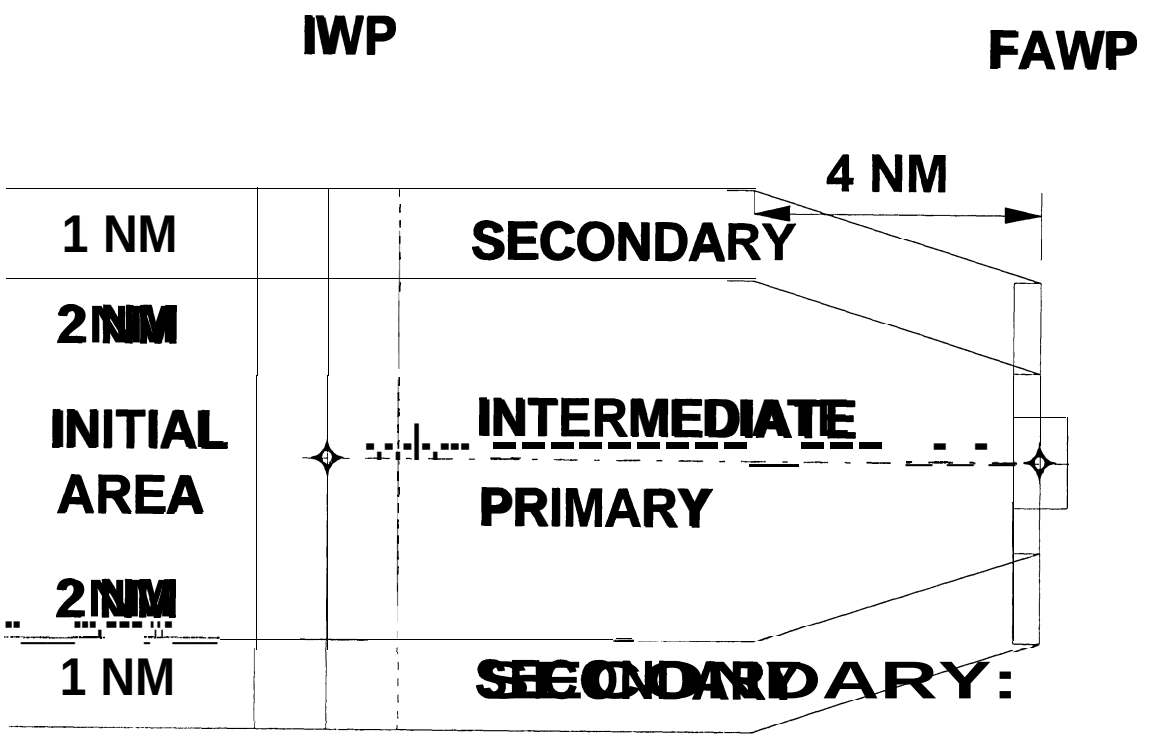

Figure 7. Final Approach Course Alignment Options, Paragraph 13a.

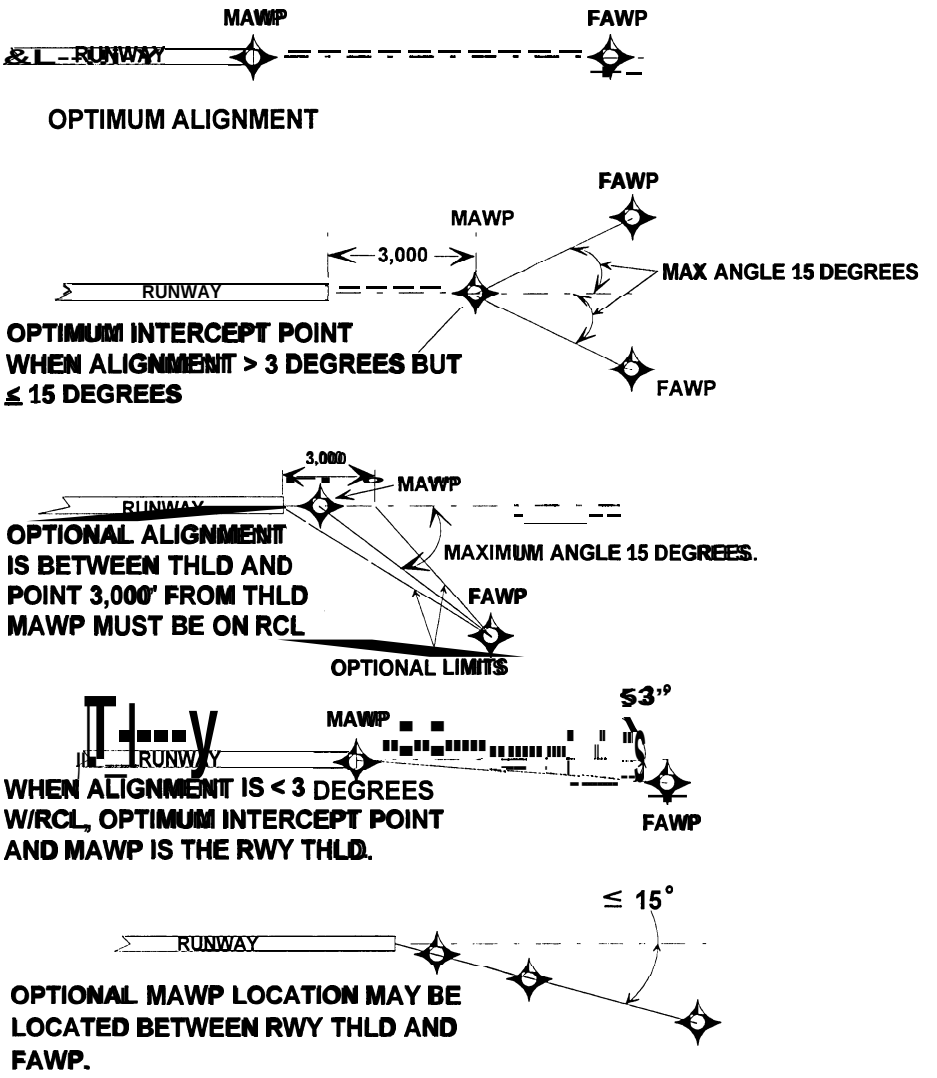

Figure 8. GPS Circling Only Alignment, Paragraph 13a.

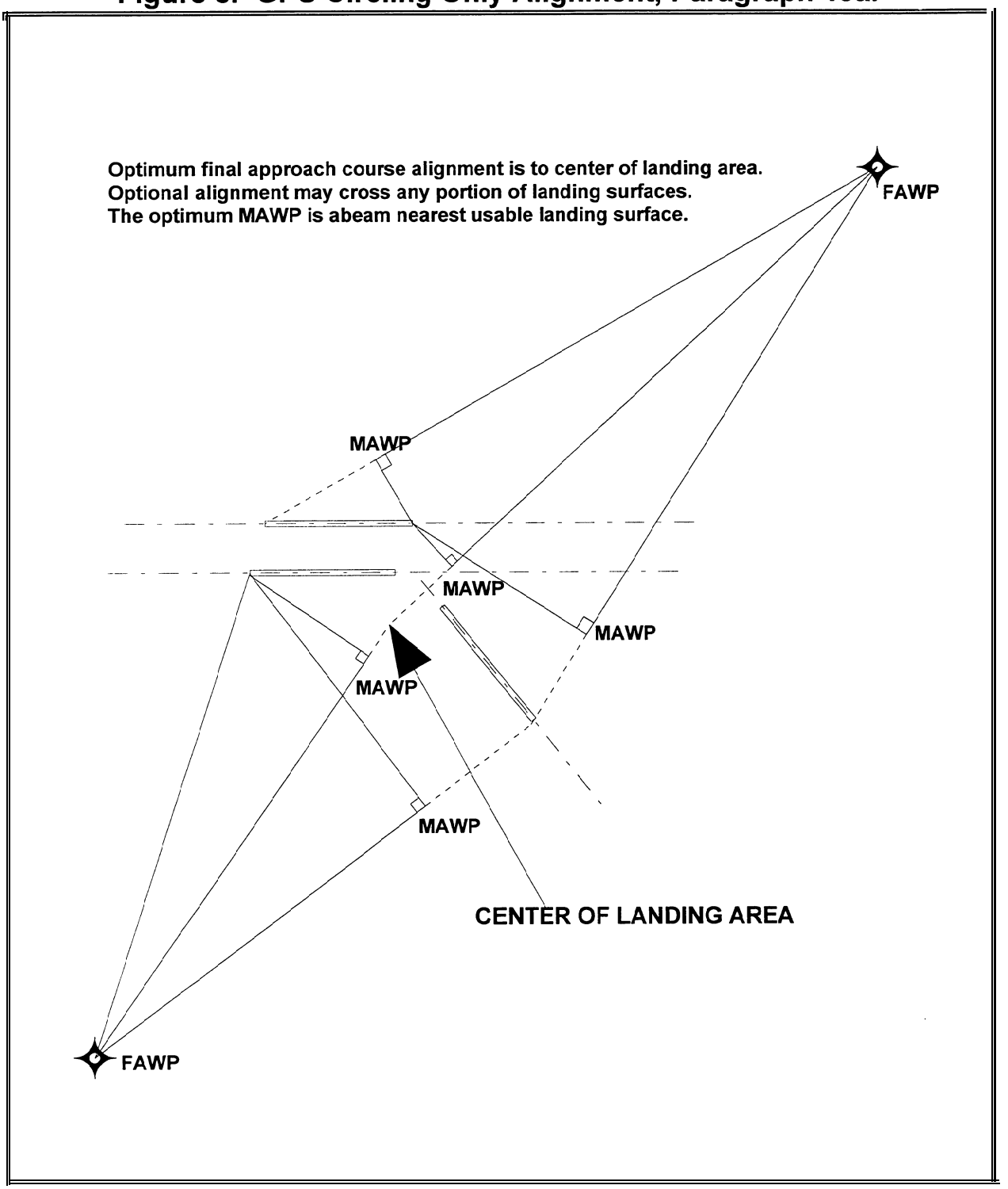

Figure 9. Final Approach Segment, Paragraph 13b

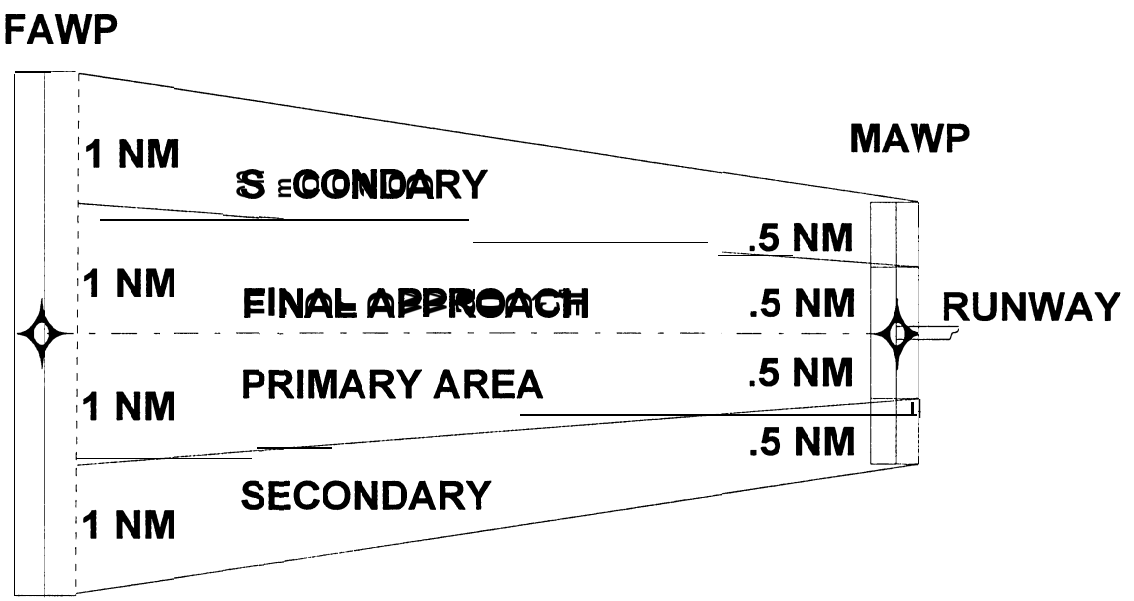

Figure 10. Extension of Final Approach Segment to Runway Threshold for Obstacle Evaluation, Paragraph 13b.

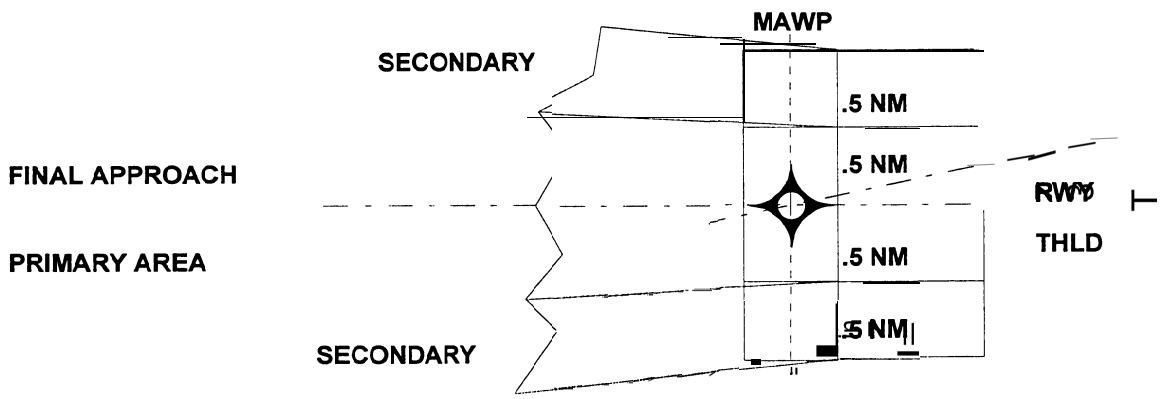

Figure 11. Missed Approach Area, Paragraph 16.

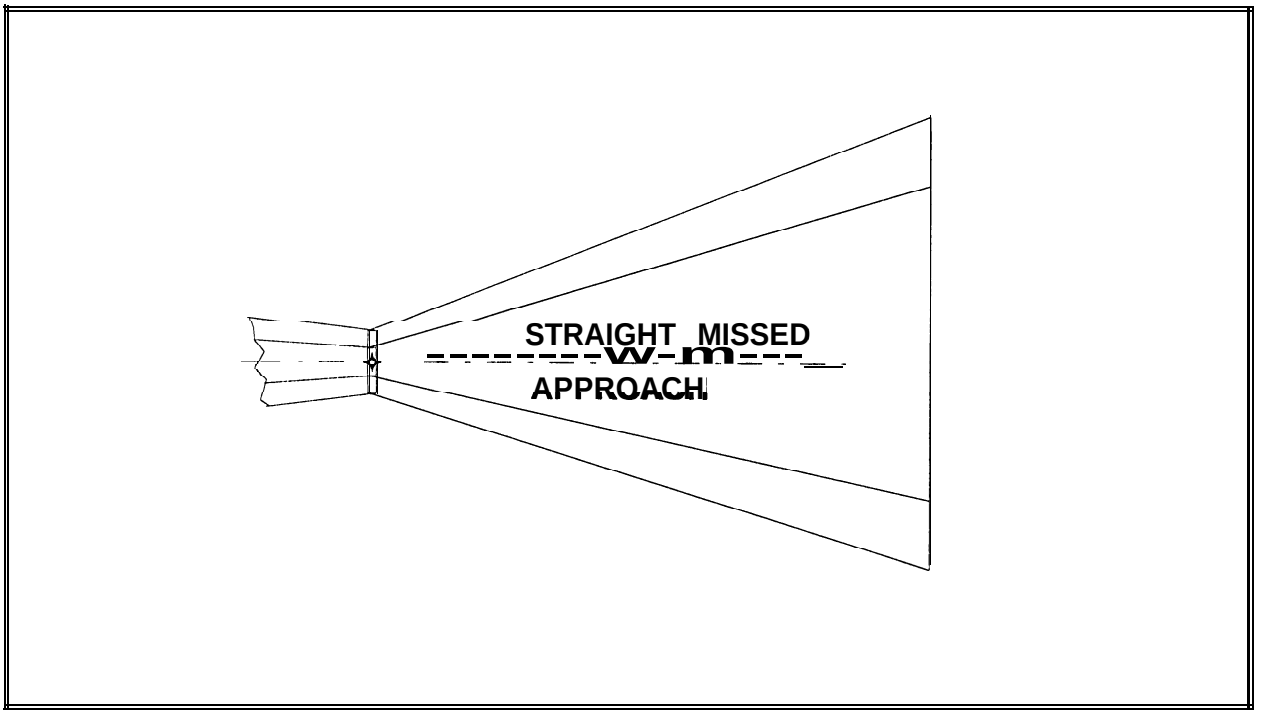

Figure 12. Straight Missed Approach at MAWP. Paragraph 16.

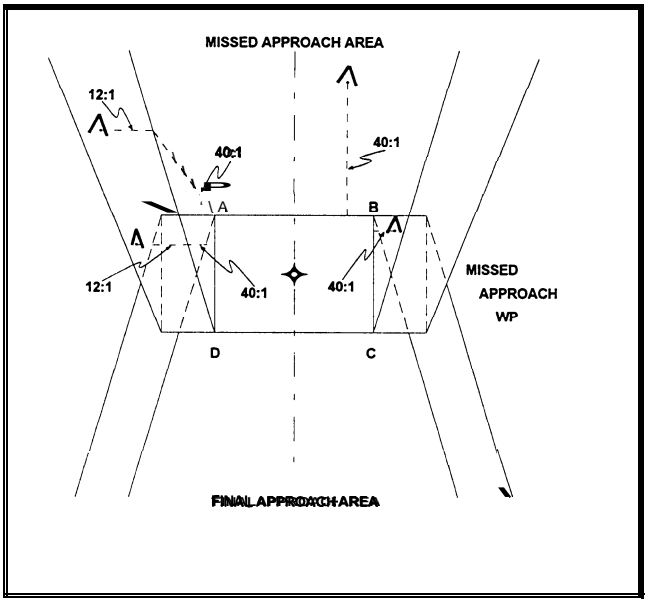

Figure 13. Construction of Straight Missed Approach when Turns Cause Outside Boundary to Cross MAWP Tolerance Area. Paragraph 16a(3).

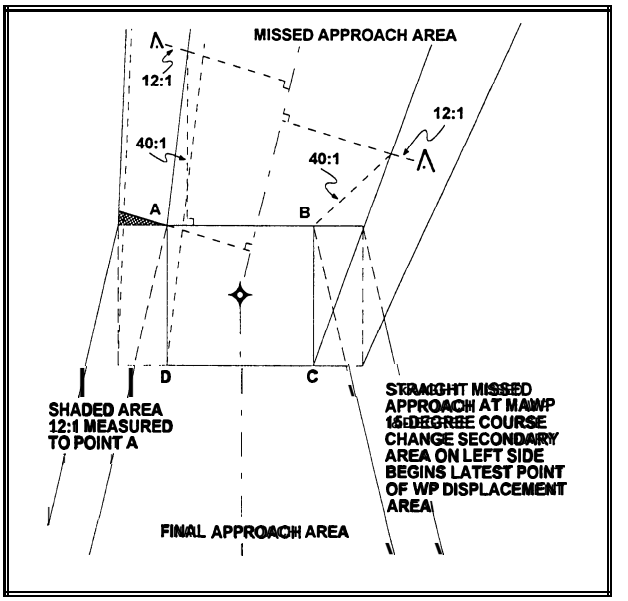

Figure 14. Direct, Narrow Missed Approach Methodology, Paragraph 17.

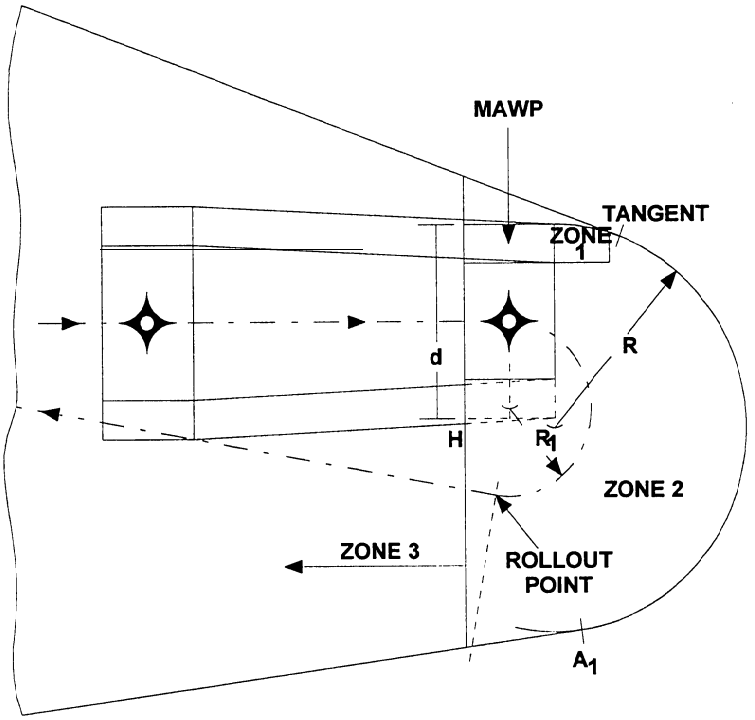

Figure 15. Route GPS, Turning Missed Approach, 90-Degree Turn or Less, Paragraph 17.

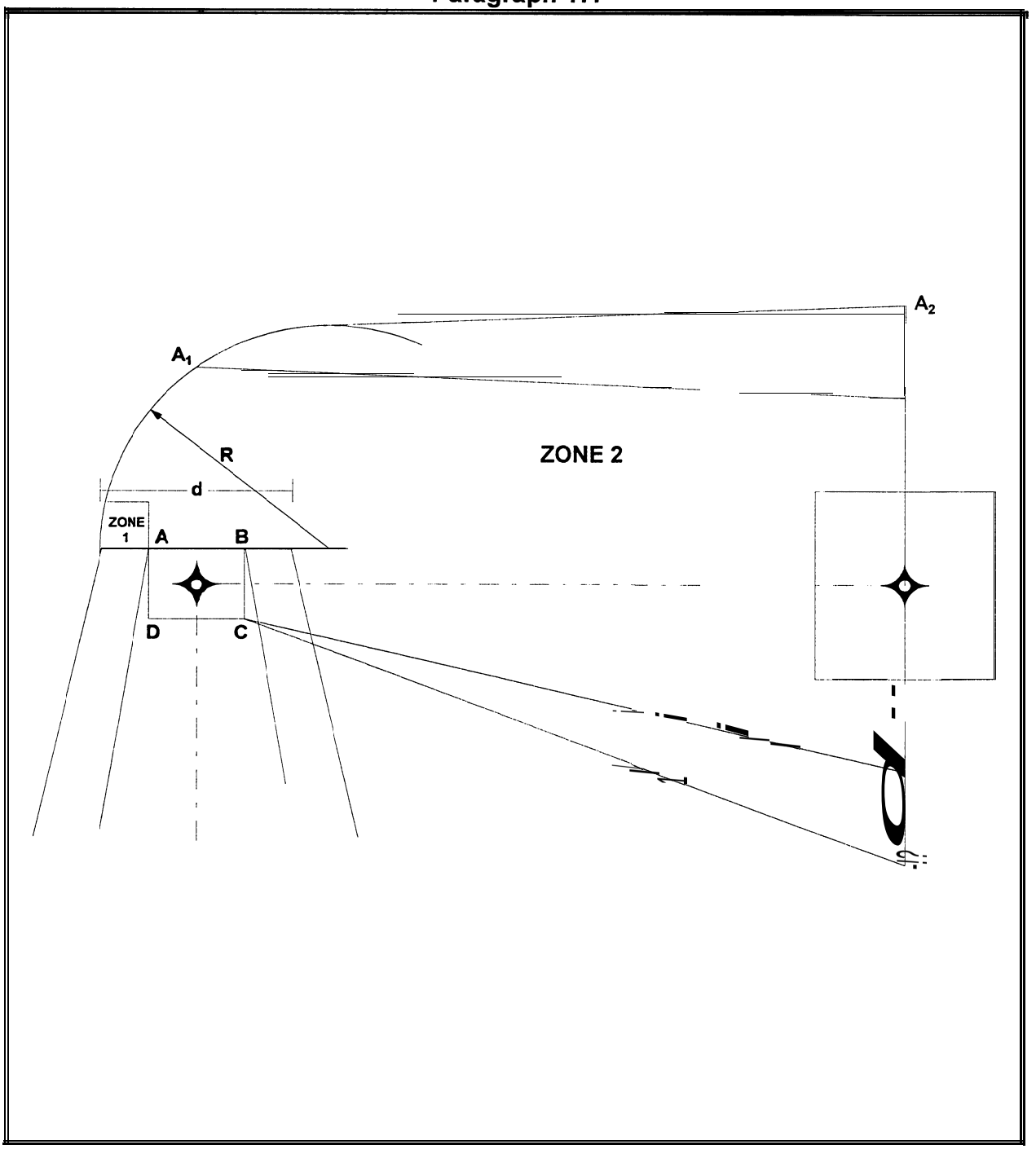

Figure 16. Direct Turning Missed Approach, 90-Degree Turn or Less Tie-Back Point C1 to Point C, Paragraph 17.

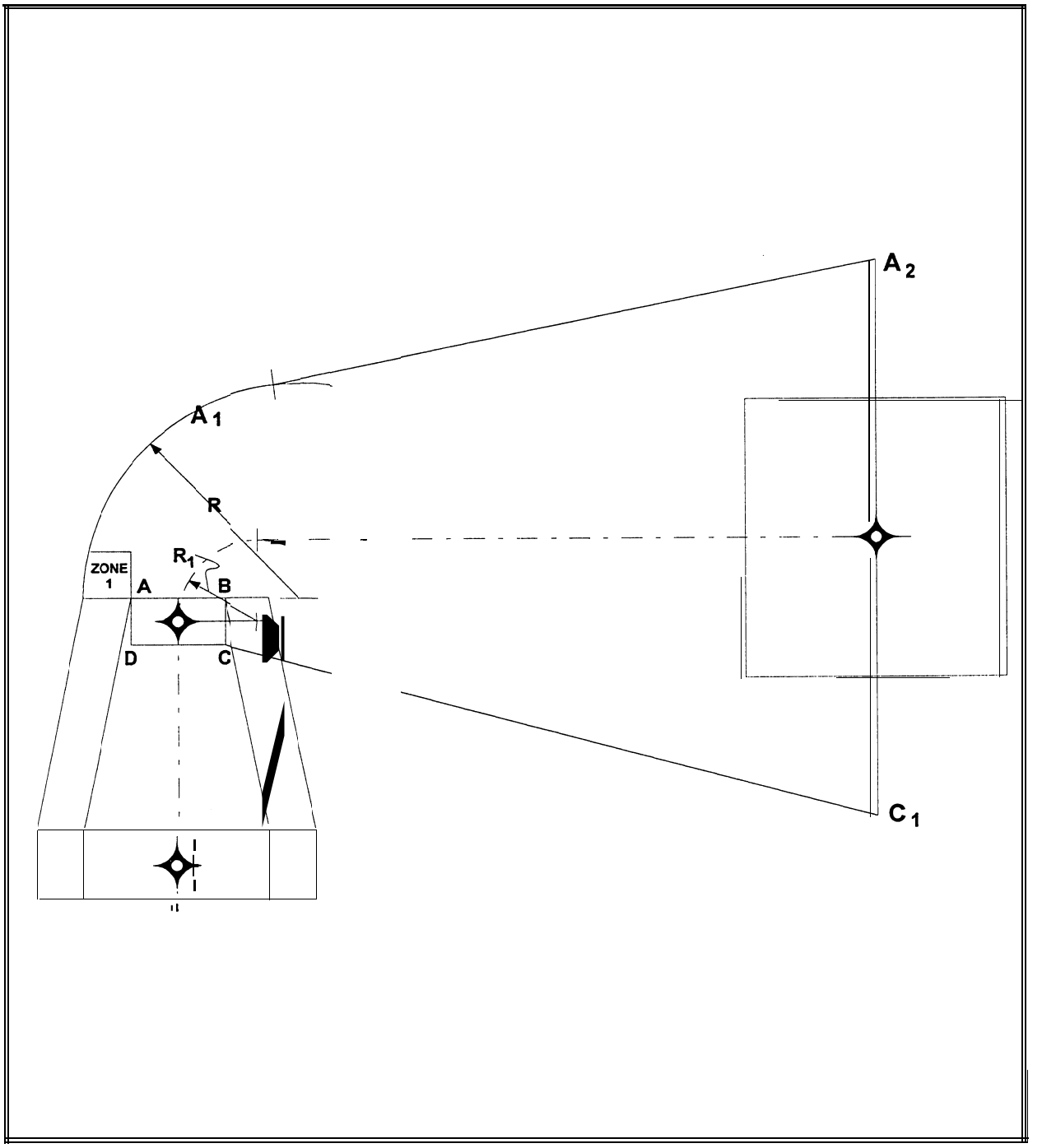

Figure 17. Route GPS Turning Missed Approach, More than 90 Degrees up to 120 Degrees, Paragraph 17.

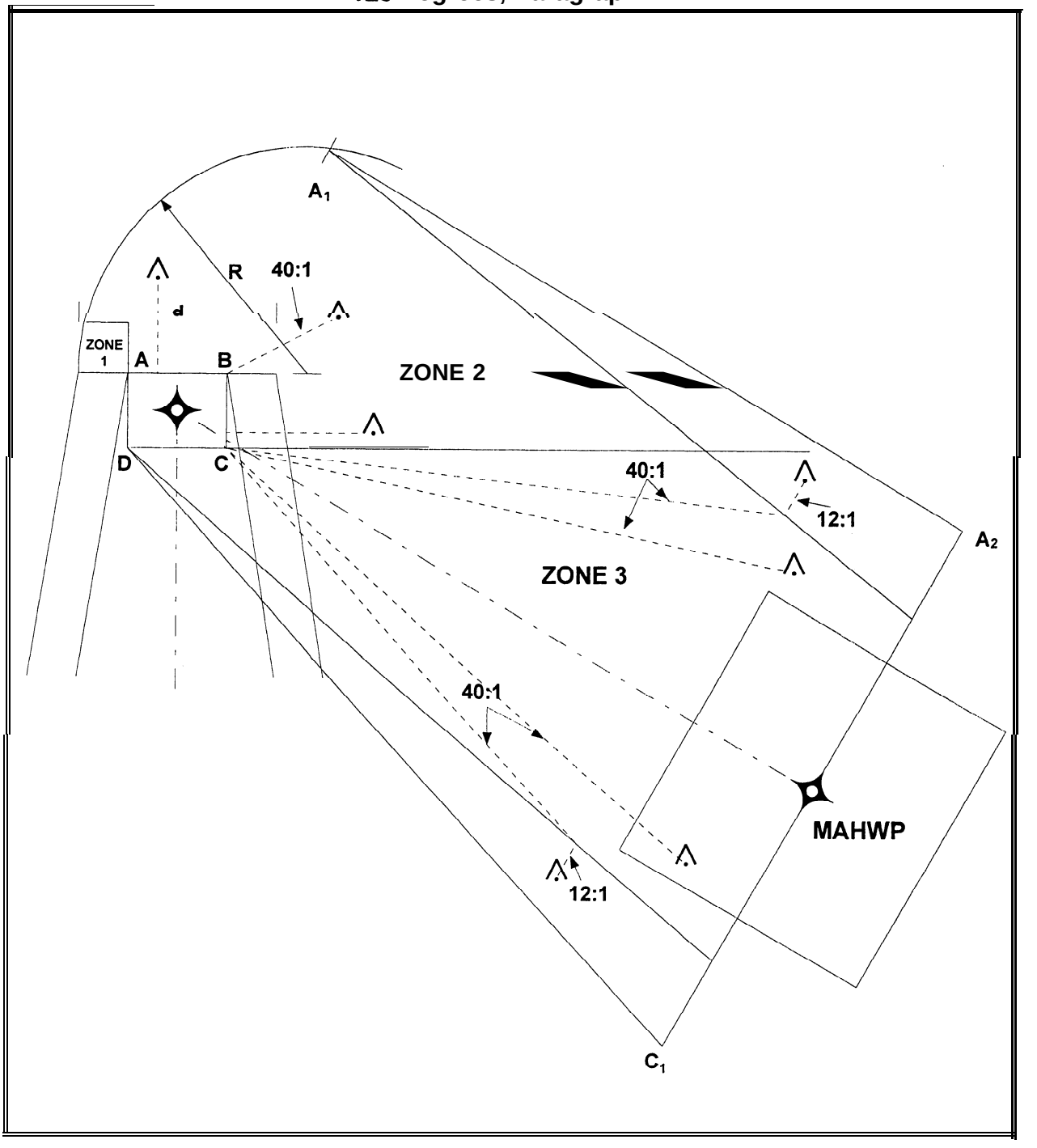

Figure 18. Direct Turning Missed Approach, Greater than 90 Degrees, Tie-Back Point C1 to Point D, Paragraph 17.

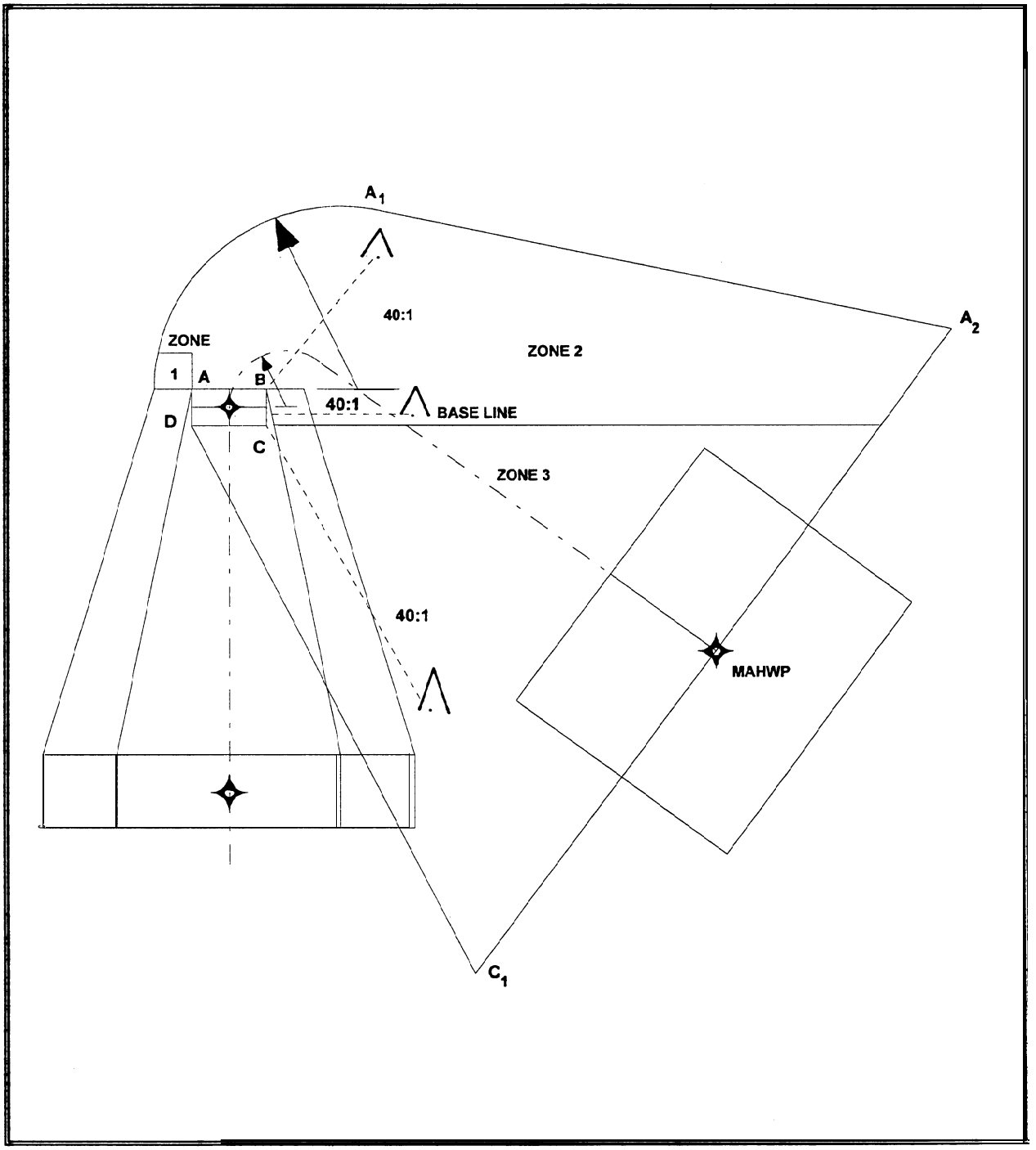

Figure 19. Direct Missed Approach, Greater than 90 Degrees, Paragraph 17.

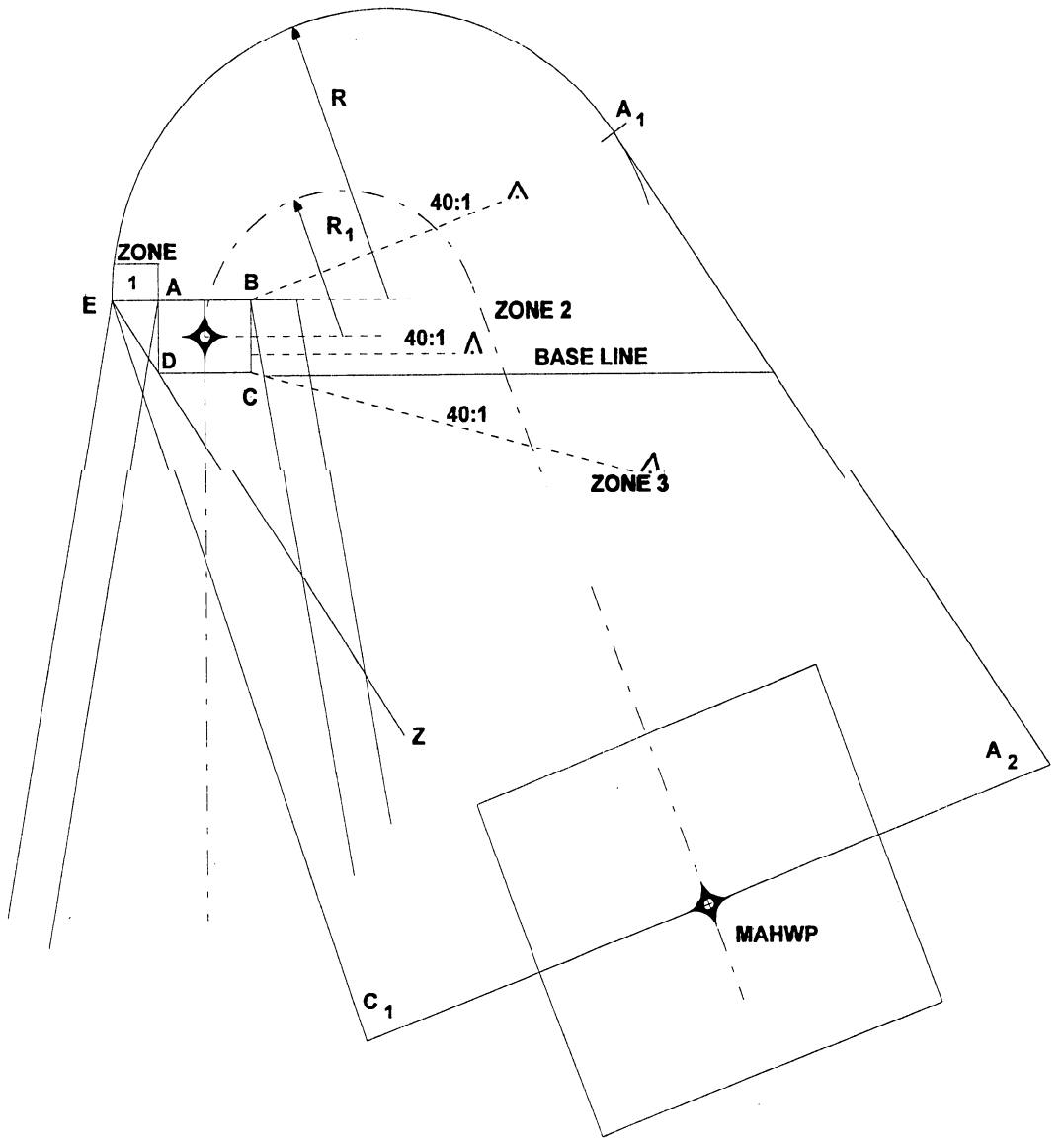

NOTE: POINT C1 CONNECTS TO POINT E WHEN C1-E IS OUTSIDE OF LINE E-D-Z. E-D-Z IS ESTABLISHED BY DRAWING AN EXTENDED LINE THROUGH D AND E.

Figure 20. Direct Turning Missed Approach Greater than 180 Degrees, Paragraph 17.

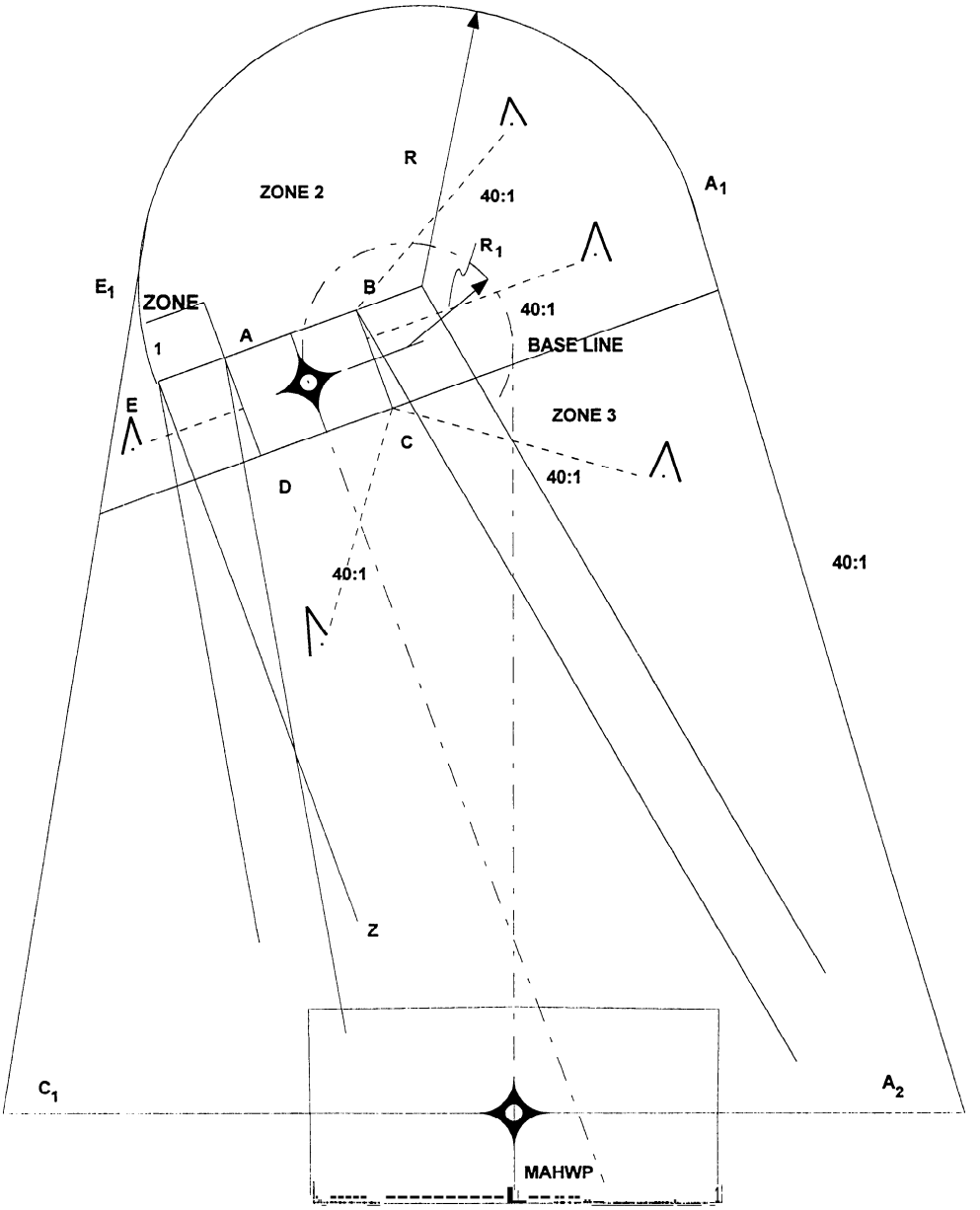

NOTE: POINT C1 CONNECTS TO E1 TANGENT TO ARC WHEN LINE C1- E1 IS OUTSIDE OF LINE E-Z. E-Z IS ESTABLISHED PARALLEL TO FINAL APPROACH COURSE LINE.

Figure 21. Route GPS Combination Straight and Turning Missed Approach 90 Degrees or Less, Paragraph 18.

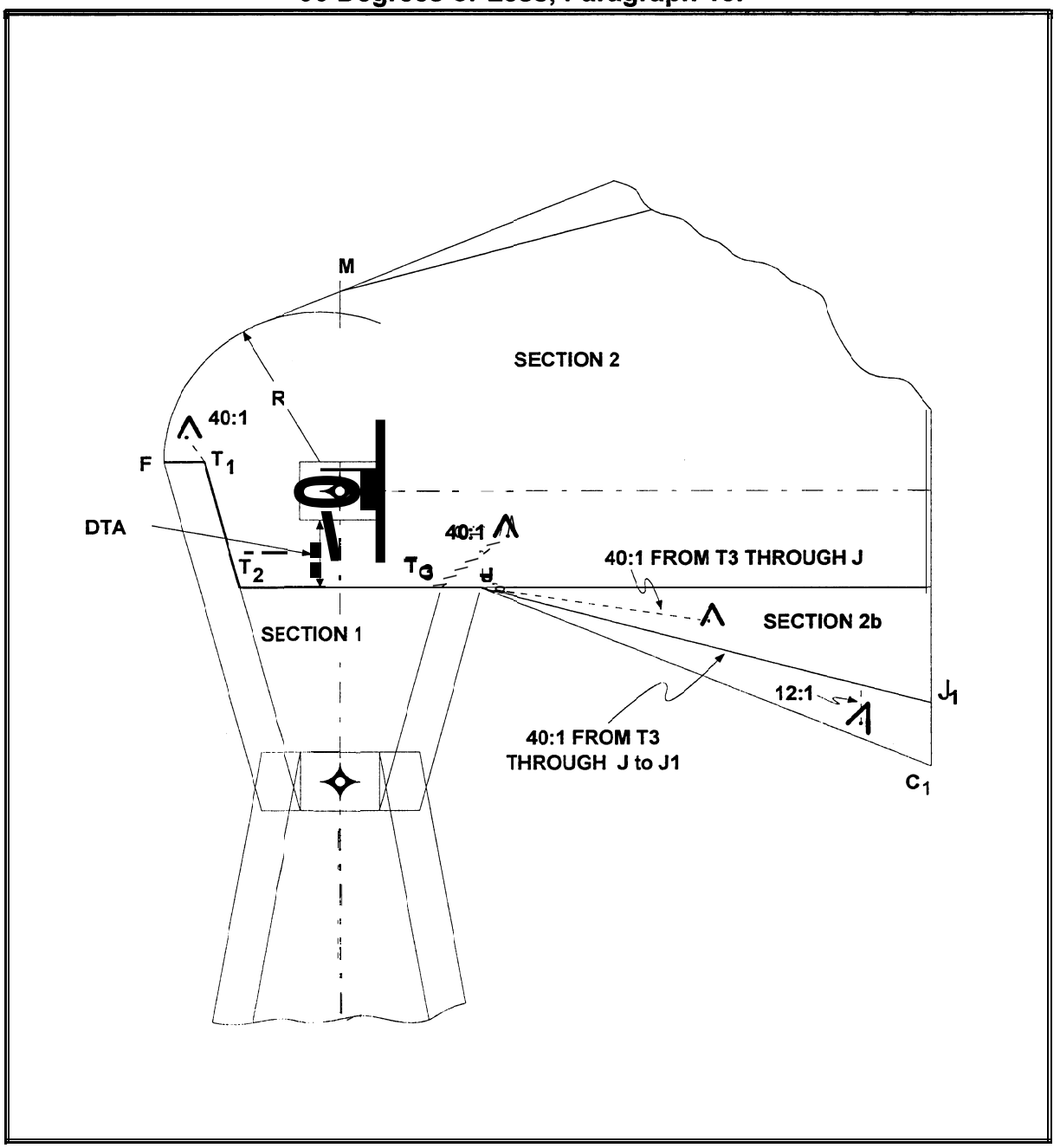

Figure 22. Route GPS Combination Straight and Turning Missed Approach, More than 90 Degrees and Up to 120 Degrees, Paragraph 18

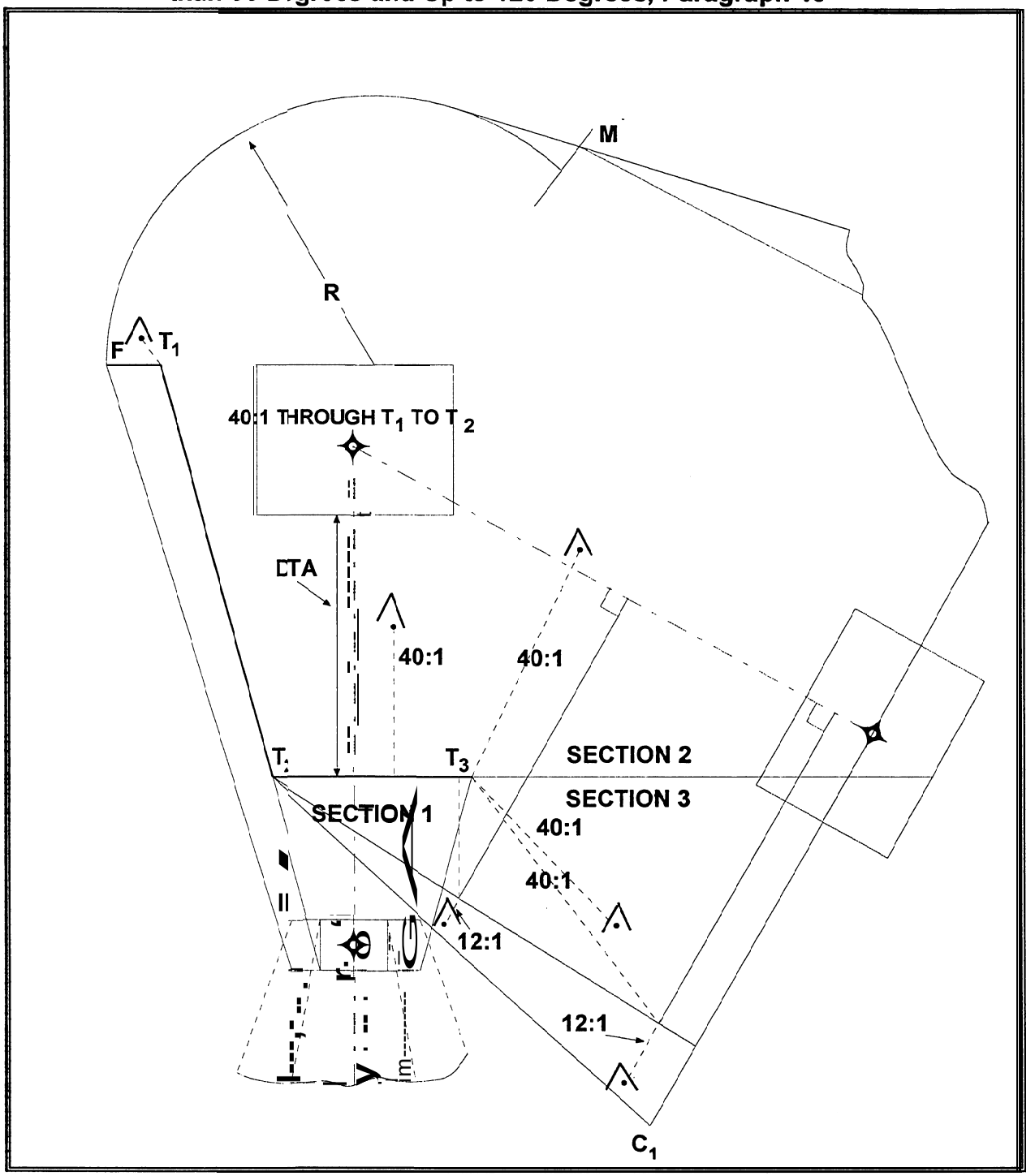

Figure 23. Direct Climb to Altitude, Straight and Turning Missed Approach, Cl above Base Line, Paragraph 18.

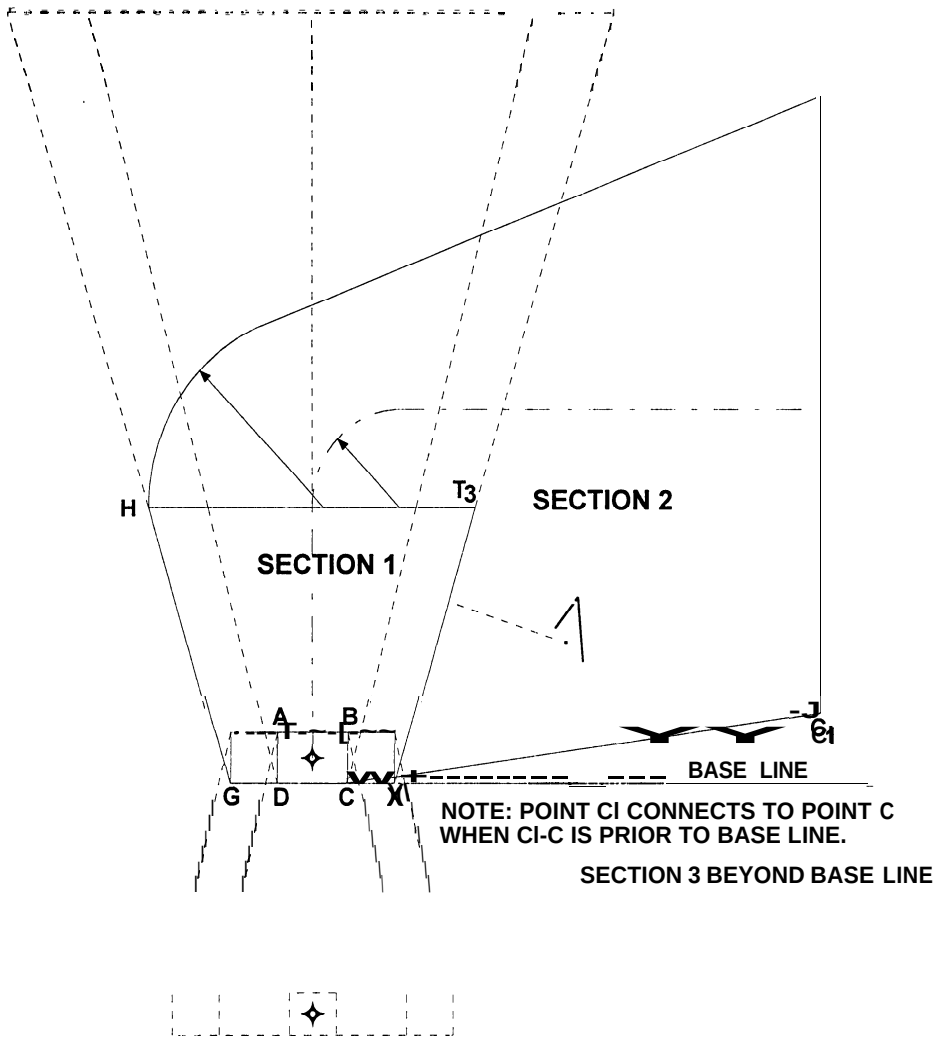

Figure 24. Direct Climb to Altitude, Straight and Turning Missed Approach Greater than 90 Degrees, Paragraph 18.

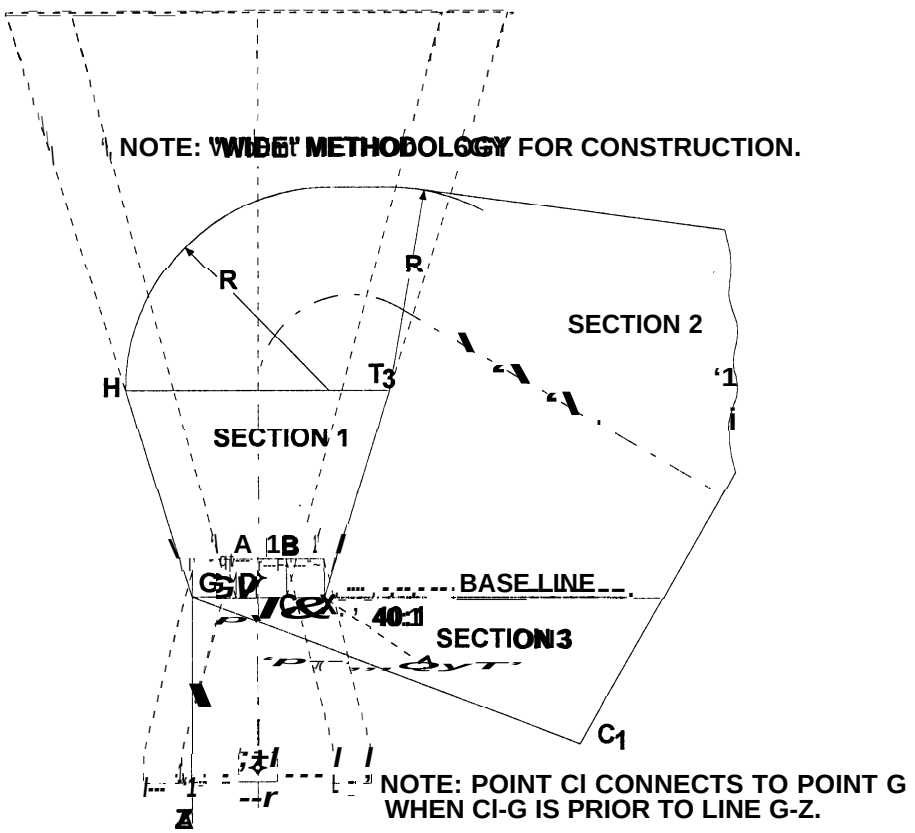

Figure 25. Direct Climb to Altitude, Straight and Turning Missed Approach Greater than 90 Degrees, Paragraph 18.

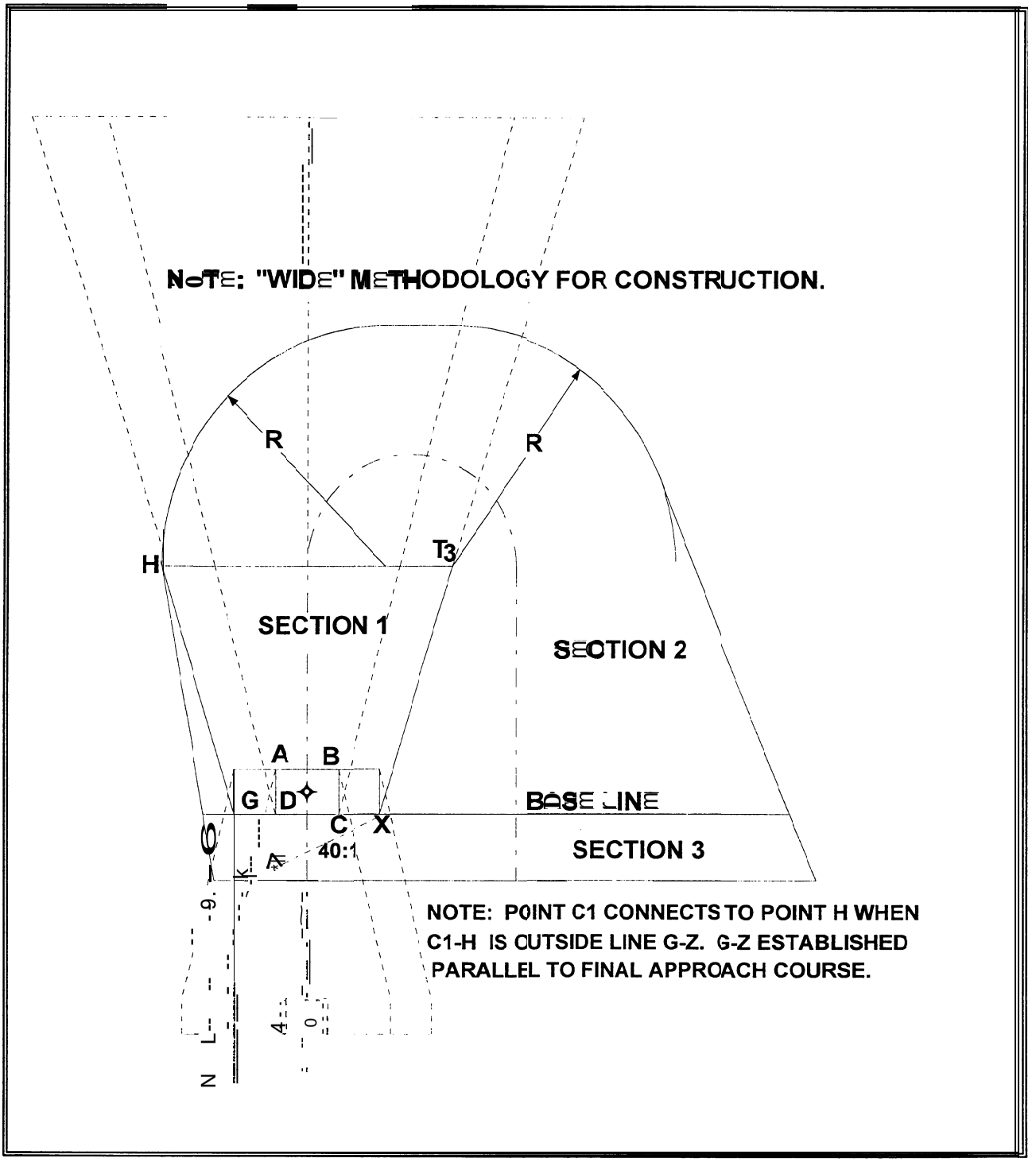

Figure 26. Climb to Altitude, Straight and Turning Missed Approach Greater than 180 Degrees, Paragraph 18.

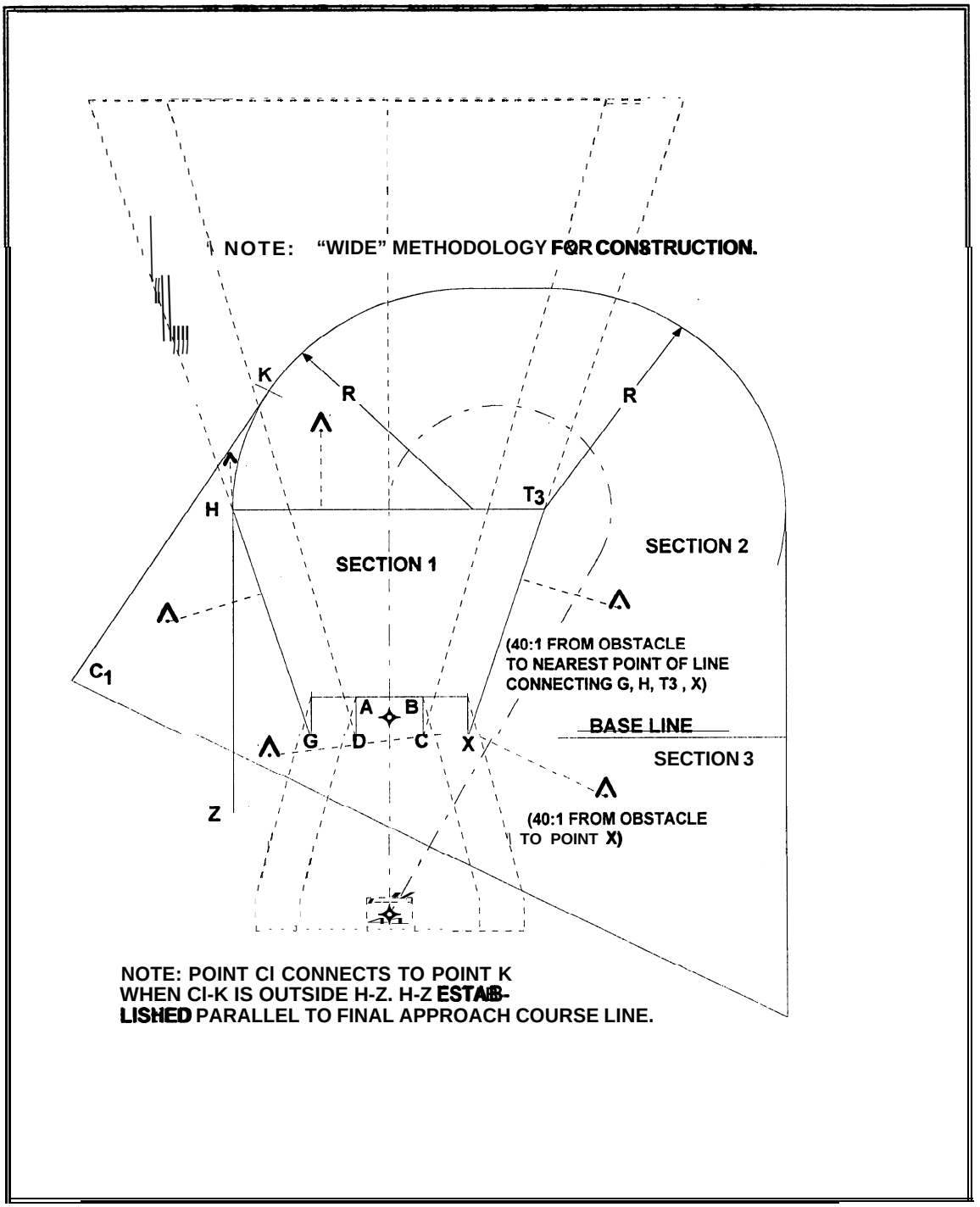

TABLE 1

GPS FIX DISPLACEMENT TOLERANCE

	EN ROUTE	TERMINAL	APPROACH
XTRK	2.8	1.5	0.5
ATRK	2.0	1.0	0.3

Table Application Per Segment of Table 1

	En Route	Terminal	Approach
Segment:			
En Route	X		
Feeder	X		
Feeder Stepdown	X		
IAWP and Initial Stepdown	X (More than 30 NM from ARP)	X (At or Less than 30 NM from ARP)	
IWP		X	
Intermediate Stepdown		X	
FAWP			X
Final Stepdown			X
MAWP			X
Missed Approach Turn Point		X	
Missed Approach Holding		X	

TABLE 2

MINIMUM LENGTH OF FINAL APPROACH SEGMENT

MAGNITUDE OF TURN OVER THE FINAL APPROACH WAYPOINT (FAWP)			
	0° – 5°	> 5° – 10°	> 10° – 15°
APPROACH CATEGORY			
A	1.8	1.8	2.0
B	1.8	2.0	2.5
C	2.0	2.5	3.0
D	2.5	3.0	3.5
E	3.0	3.5	4.0

TABLE 3

MINIMUM LEG LENGTH FROM MAWP TO NEXT WP USING GPS MISSED APPROACH PROCEDURES (For Route Missed Approach)

Course Change at MAWP					
CAT	>15° ≤30°	≤ 45°	≤ 60°	≤ 90°	≤ 120°
Minimum Leg Length, NM, Between MAWP and Next WP					
A	3.0	4.0	5.0	5.9	6.9
B	3.0	4.0	5.2	6.2	7.2
C	3.0	4.2	5.5	6.5	7.6
D	3.0	4.5	6.0	7.3	8.5
E	3.0	5.5	7.8	9.5	11.3

U.S. Department
of Transportation

**Federal Aviation
Administration**

Directive Feedback Information

Please submit any written comments or recommendations for improving this directive, or suggest new items or subjects to be added to it. Also, if you find an error, please tell us about it.

Subject: Order _____

To: Directive Management Officer, _____

(Please check all appropriate line items)

☐ An error (procedural or typographical) has been noted in paragraph _____ on page _____.

☐ Recommend paragraph _____ on page _____ be changed as follows:
(attach separate sheet if necessary)

☐ In a future change to this directive, please include coverage on the folowing subject
(briefly describe what you want added):

☐ Other comments:

☐ I would like to discuss the above. Please contact me.

Submitted by: _____ Date: _____

FTS Telephone Number: _____ Routing Symbol: _____

FAA Form 1320—19 (8-89)