FAA-E-2930

:E 0

UNITED STATES DEPARTMENT OF TRANSPORTATION
FEDERAL AVIATION ADMINISTRATION
SPECIFICATION

CONTROLLER-PILOT DATA LINK COMMUNICATIONS BUILD-IA

(CPDLC-IA)

DOCUMENT CONTROL CENTER

Abstract

This document specifies the functional and performance requirements for implementing the CPDLC-IA Service in the en route computer system located in the En Route Air Route Traffic Control Centers (ARTCCs). This specification defines the controller and supervisor input actions, the display outputs, and the on-line and off-line support functions necessary to provide the CPDLC-IA Service in the en route environment.

KEYWORDS: CPDLC-I Service, CPDLC-IA Service, En route Computer System, ARTCC, Data Link

Foreword

This specification was written by a team of FAA, CAASD, and contractor personnel representing many organizations with interest in the development of the Controller-Pilot Data Link Communications (CPDLC). In addition, several FAA organizations reviewed early versions of this specification and submitted important comments and suggestions, which were incorporated in this revision. This release has been approved by the CPDLC team for format and content.

This page is intentionally left blank.

TABLE OF CONTENTS

Section **Page**

SCOPE **1-1**

1.1 IDENTIFICATION 1-1

1.1.1 Background *1-1*

1.2 DOCUMENT CONVENTIONS 1-2

APPLICABLE DOCUMENTS **2-1**

2.1 GOVERNMENT DOCUMENTS 2-1

2.1.1 Specifications *2-1*

2.1.1.1 Federal Aviation Administration 2-1
2.1.1.2 Military 2-1
2.1.1.3 Other Documents 2-1

2.1.2 Standards *2-2*

2.1.2.1 Federal Aviation Administration 2-2
2.1.2.2 Military 2-2
2.1.2.3 Other Documents 2-2

2.1.3 Other Documents *2-2*

2.1.3.1 Federal Aviation Administration 2-2
2.1.3.2 Military 2-2
2.1.3.3 Other Documents 2-2

2.2 NONGOVERNMENT DOCUMENTS 2-2

2.2.1 Specifications *2-3*
2.2.2 Standards *2-3*
2.2.3 Other Documents *2-3*

REQUIREMENTS **3-1**

3.1 GENERAL 3-1

3.2 CPDLC-IA SERVICE'S CHARACTERISTICS 3-1

3.2.1 CPDLC-IA Performance Characteristics *3-2*

3.2.1.1 CPDLC System Capacity 3-2
3.2.1.2 CPDLC System Response Time 3-2

3.2.2 CPDLC-IA Functional Characteristics ..... *-32*

3.2.2.1 CPDLC-IA Service Processing Requirements 3-2
3.2.2.2 Transfer of Communication (TOC) 3-2
3.2.2.3 Initial Contact (IC) 3-5
3.2.2.4 Altimeter Setting (AS) 3-6
3.2.2.5 Menu Text (MT) 3-7
3.2.2.6 Altitude Assignment (AA) 3-8
3.2.2.7 Speed Assignment (SP) 3-9
3.2.2.8 Heading Assignment (HD) 3-10
3.2.2.9 Route Clearance (RC) 3-10
3.2.2.10 Pilot-Initiated Downlink (PD) 3-11

3.2.3 CPDLC-IA Service On-Line Support Functions *3-12*

3.2.3.1 CPDLC-IA Uplink Message Monitoring 3-13
3.2.3.2 Data Link Session and Eligibility 3-15
3.2.3.3 Sector Settings 3-18
3.2.3.4 Data Recording 3-19
3.2.3.5 Supervisory Input Actions 3-20
3.2.3.6 Failure Recovery 3-21
3.2.3.7 Context Management Application (CMA) 3-21
3.2.3.8 Simulation for Training and Testing 3-22
3.2.3.9 Error Messages and Aborts 3-23
3.2.3.10 CPDLC-IA Network Management 3-24

3.2.4 CPDLC-IA Service Off-line Support Functions *3-24*

3.2.4.1 Data Reduction of Recorded Data 3-24
3.2.4.2 Adaptation Data Generation 3-25

3.2.5 ATN SARPs Messages *3-26*

3.3 EXTERNAL INTERFACE REQUIREMENTS 3-26

3.4 INTERNAL INTERFACES 3-27

3.5 PHYSICAL CHARACTERISTICS 3-27

3.6 SYSTEM QUALITY FACTORS 3-27

3.6.1 Reliability *3-27*
3.6.2 Maintainability *3-27*
3.6.3 Availability *3-27*

3.7 ENVIRONMENTAL CONDITIONS 3-27

3.8 TRANSPORTABILITY 3-27

3.9 FLEXIBILITY AND EXPANSION 3-27

3.10 PORTABILITY 3-28

3.11 CPDLC SYSTEM SECURITY 3-28

QUALIFICATION REQUIREMENTS 4-1

4.1 GENERAL 4-1

4.2 TEST PHILOSOPHY 4-1

4.3 TEST OBJECTIVES 4-1

4.4 TEST LEVELS 4-2

4.4.1 Subsystem Tests *4-2*
4.4.2 System Integration Testing (SIT) *4-3*
4.4.3 Site Testing *4-4*

4.5 TEST FACILITIES 4-4

4.6 TEST RESPONSIBILITIES 4-4

4.7 VERIFICATION METHODS 4-4

4.7.1 Test *4-4*
4.7.2 Demonstration *4-5*
4.7.3 Analysis *4-5*
4.7.4 Inspection *4-5*

4.8 TEST CONSTRAINTS 4-5

4.9 QUALIFICATION CROSS REFERENCE TABLE 4-5

PREPARATION FOR DELIVERY 5-1

NOTES **6-1**

6.1 CPDLC-IA BLOCK DIAGRAM 6-1

6.2 CPDLC-IA PRELIMINARY TRANSFER DELAY TIME BUDGETS 6-2

6.3 DEFINITIONS 6-3

List of Figures

Figure 6-1. CPDLC-IA Block Diagram 6-1
Figure 6-2. CPDLC-IA Mean Transfer Delay Time Budgets 6-2
Figure 6-3. CPDLC-IA 95th Percentile Transfer Delay Time Budgets 6-3

List of Tables

Table 3-1. Sector Settings Display Parameters 3-19
Table 4-1. CPDLC-IA Service Subsystem Tests Summary 4-2
Table 4-2. CPDLC-IA Service System Integration Tests Summary 4-3
Table 4-3. CPDLC-IA Service Site Tests Summary 4-4
Table 4-4. Example of CPDLC-IA Service Qualification Cross Reference Table 4-6
Table A-1. Responses/Acknowledgments (Uplink) A-1
Table A-2. Vertical Clearances (Uplink) A-1
Table A-3. Route Modifications (Uplink) A-2
Table A-4. Speed Changes (Uplink) A-2
Table A-5. Contact/Monitor/Surveillance Requests (Uplink) A-2
Table A-6. Report/Confirmation Requests (Uplink) A-3
Table A-7. Air Traffic Advisories (Uplink) A-3
Table A-8. System Management Messages (Uplink) A-4
Table A-9. Additional Messages (Uplink) A-5
Table A-10. Responses (Downlink) A-6
Table A-11. Vertical Requests (Downlink) A-6
Table A-12. Reports (Downlink) A-6
Table A-13. System Management Messages (Downlink) A-7

Appendix

Appendix A

Controller–Pilot Data Link Communications, Build IA (CPDLC-IA) A-1

Appendix B

Acroynms B-1

Section 1

Scope

1.1 Identification

This document establishes the functional requirements and performance characteristics for implementing the Controller-Pilot Data Link Communications Build IA (CPDLC-IA) Service in the en route computer system of the Air Route Traffic Control Center (ARTCC). This specification encompasses the requirements for controller and supervisor input actions, display outputs, and CPDLC system support functions for implementing the CPDLC-IA Service. For the purposes of this specification, the CPDLC system is defined as the ground automation software developed to satisfy the requirements in this specification and all processors on which this software executes.

CPDLC-IA is the second iteration of the FAA's phased implementation of CPDLC in the en route domain. It builds upon the functions, messages, and services implemented in CPDLC Build I (CPDLC-I). CPDLC-IA will maintain a similar infrastructure and will reuse most of the software developed for CPDLC-I. At this stage of development, CPDLC-IA is designed as a domestic implementation only and will not provide seamless CPDLC service across international Flight Information Region (FIR) boundaries.

1.1.1 Background

The Federal Aviation Administration (FAA), in conjunction with industry and foreign Civil Aviation Authority (CAA) participation, is developing a data link system to enhance air-ground communications. The CPDLC system, which is one part of the FAA's data link system, will provide an additional communications medium to complement the voice channels used by controllers and pilots for the exchange of air traffic clearances and information. The FAA's data link system will be based upon international standards developed by the International Civil Aviation Organization (ICAO).

The FAA will implement CPDLC in a phased manner that is consistent with ICAO standards, the data link community expectations, and other CAA's implementation programs. The first iteration of CPDLC (CPDLC Build I) will implement a small subset of the messages defined for the ICAO CPDLC application. Successive iterations of CPDLC (CPDLC Builds IA, II, and III) will implement additional CPDLC messages consistent with the objective of fielding usable, well-defined systems in incremental steps that provide user community benefit. The first iterations of CPDLC will use a service provider, VDL-2 subnetwork, for message delivery. The FAA's NEXCOM program is expected to provide the communications subnetwork for a future iteration of CPDLC.

The FAA has conducted extensive testing of CPDLC services at the William J. Hughes Technical Center. The FAA used the results of this testing in developing the controller CPDLC Computer Human Interface (CHI) design intended for operational use. This design is reflected in the requirements contained herein.

1.2 Document Conventions

The term "*shall*" is used to specify an action the contractor must take. The word "*will*" is used to express a declaration of future action on the part of the FAA. "*May*" denotes an optional action or a function with several implementations or outcomes.

Section 2

Applicable Documents

2.1 Government Documents

The documents include specifications, standards, guidelines, handbooks, and other special publications. These documents of the exact issue shown form a part of this specification to the extent specified herein. In the event of conflict between the documents referenced herein and the contents of this specification, the content of this specification shall be considered a superseding requirement.

2.1.1 Specifications

2.1.1.1 Federal Aviation Administration

Document	Title
NAS-SR-1000	NAS System Requirements Specification, Mar 21, 1985 (change 14, Dec. 1995)
NAS-MD-318	NAS En Route Performance Criteria, Nov. 20, 1997
NAS-MD-325	NAS En Route Software Design Requirements, Nov. 20, 1997
NAS-IR-40010001	ARTCC NAS LAN/User Systems IRD, Dec. 21, 1995
NAS-IR-90154001	HID/NAS LAN NSM to Users IRD, Mar. 24, 1997

2.1.1.2 Military

None

2.1.1.3 Other Documents

None

2.1.2 Standards

2.1.2.1 Federal Aviation Administration

None

2.1.2.2 Military

None

2.1.2.3 Other Documents

Document	Title
FIPS PUB-151-2	Portable Operating System Interface (POSIX) System Application Program Interface ([C Language] (ISO/IEC 9945-1:1990), May 12, 1993

2.1.3 Other Documents

2.1.3.1 Federal Aviation Administration

Document	Title
FAA Order 7210.3	Facility Operation and Administration

2.1.3.2 Military

None

2.1.3.3 Other Documents

None

2.2 Nongovernment Documents

These documents include specifications, standards, guidelines, handbooks, and other special publications. These documents of the exact issue shown form a part of this specification to the extent specified herein. In the event of conflict between the documents referenced herein and the contents of this specification, the content of this specification shall be considered a superseding requirement. Conflicts of requirements shall be resolved using an approved requirement problem resolution process.

2.2.1 Specifications

None

2.2.2 Standards

Document	Title
ICAO Publication	ICAO Standards and Recommended Practices (SARPs), Aeronautical Telecommunications, Annex 10 to the Convention on International Civil Aviation, Volume III, Part I, *Digital Communication Systems*, Chapter 3, *Aeronautical Telecommunication Network (ATN)*
ICAO 9705-AN/956	Manual of Technical Provisions for the Aeronautical Telecommunication Network (ATN), First Edition, 1998

2.2.3 Other Documents

None

Section 3

Requirements

3.1 General

The operational use of CPDLC-IA is described as a set of services. The services that have been identified for CPDLC-IA implementation are:

a. Transfer of Communication (TOC)
b. Initial Contact (IC)
c. Altimeter Setting (AS)
d. Menu Text (MT)
e. Altitude Assignment (AA)
f. Speed Assignment (SP)
g. Heading Assignment (HD)
h. Route Clearance (RC)
i. Pilot-Initiated Downlink (PD)

Four new sector display lists will be implemented for the CPDLC-IA Service: Menu Text List, Status List, Pilot-Initiated Downlink List, and Sector Settings List. As discussed for the MT Service, the Menu Text List will include pre-defined messages for optional selection by the controller. The Status List will present the status of CPDLC-IA uplink messages transmitted by the sector. The Pilot-Initiated Downlink List will contain the status of CPDLC-IA messages downlinked by pilots. The Sector Settings List will display the parameters that tailor each sector for CPDLC-IA Service.

3.2 CPDLC-IA Service's Characteristics

The CPDLC system shall comply with ICAO Standards and Recommended Practices (SARPs), Aeronautical Telecommunications, Annex 10 to the Convention on International Civil Aviation, Volume III, Part I, *Digital Communication Systems*, Chapter 3, *Aeronautical Telecommunication Network (ATN)*. The CPDLC system shall comply with ICAO 9705-AN/956 with the exception of Sections 2.2, 2.4, and 3. The CPDLC system shall comply with ICAO 9705-AN/956, Class I operation (Section 2.3.8). ICAO 9705-AN/956 will be referenced hereafter as the ATN SARPs. This section specifies the functional and performance characteristics for the CPDLC-IA Service.

3.2.1 CPDLC-IA Performance Characteristics

When the CPDLC-IA Service is enabled, the CPDLC system shall maintain the established performance characteristics specified for the current en route computer system.

3.2.1.1 CPDLC System Capacity

The CPDLC system shall be capable of providing CPDLC service to a minimum of 400 aircraft at any given time. The CPDLC system shall support two (2) uplinks per aircraft per minute. The CPDLC system shall support two (2) downlinks per aircraft per minute.

3.2.1.2 CPDLC System Response Time

The CPDLC system shall have a mean response time of two (2) seconds or less and a 95th percentile response time of 3.5 seconds or less. (See Section 6.3 for a definition for response time.)

3.2.2 CPDLC-IA Functional Characteristics

The following sections identify the CPDLC-IA Service's functional requirements.

3.2.2.1 CPDLC-IA Service Processing Requirements

This section specifies the functional processing required for each CPDLC-IA Service. The requirements for each CPDLC-IA Service will be presented as follows:

a. *Service Identification*: This section specifies the service name and provides an overall description of how the service will function.

b. *Requirements For Use*: This section specifies the input actions, message processing, and display information requirements for use of the service.

3.2.2.2 Transfer of Communication (TOC)

The TOC Service will generate an uplink message to direct the pilot to change the assigned voice radio frequency. The voice radio frequency should be changed to that of the next sector within the ARTCC, or to that of a position in an adjacent facility with which automated hand-offs are conducted. The TOC uplink message may be automatically or manually initiated as selected at the sector. The TOC Service also provides for the transfer of Data Link Eligibility.

3.2.2.2.1 Requirements for Use

3.2.2.2.1.1 Radio Frequency Transfer

Radio Frequency Transfer is defined as the uplink of a voice radio frequency. The requirements for radio frequency transfer are as follows:

a. The CPDLC system shall provide radio frequency transfer.

b. The CPDLC system shall support automatic, manual, and off modes of TOC on a per hand-off basis. If the TOC mode is not indicated at hand-off initiation, the CPDLC system shall use the current sector TOC mode for the subsequent TOC uplink message (see Section 3.2.3.3). The CPDLC system shall disallow TOC off mode to be overridden by TOC automatic or manual modes on a per hand-off basis. For automatic and manual modes of TOC, the CPDLC system shall generate a TOC uplink message after hand-off acceptance of the track. In manual mode of TOC, a controller input action shall be provided to send the TOC uplink message. In automatic mode of TOC, the CPDLC system shall send the TOC uplink message upon hand-off acceptance of the track. In the off mode of TOC, no TOC uplink message shall be generated.

c. The CPDLC system shall provide the capability in the hand-off initiation action for the controller to override the CPDLC system selected voice radio frequency with a different adapted voice radio frequency that identifies another sector or facility.

d. The CPDLC system shall provide the capability in the manually initiated TOC uplink message for the controller to override the CPDLC system selected voice radio frequency with a different adapted voice radio frequency that identifies another sector or facility.

3.2.2.2.1.1.1 Intrafacility Radio Frequency Transfer

The radio frequency transfer requirements between two sectors within the same ARTCC are as follows:

a. For voice radio frequency change uplinks with Initial Contact processing disabled or when the receiving sector has sector TOC mode off, the CPDLC system shall use the Contact message element (uM117) to indicate a contact instruction.

b. The CPDLC system shall provide a controller input action to select the message element (Monitor or Contact) to use to uplink an adapted voice radio frequency to an aircraft independently of track hand-off processing.

c. The CPDLC system shall use the Monitor message element (uM120) for a voice radio frequency change uplinked independently of track hand-off processing to indicate a monitor instruction.

d. The CPDLC system shall use the Contact message element (uM117) for voice radio frequency change uplinked independently of track hand-off processing to indicate a contact instruction.

3.2.2.2.1.1.2 Interfacility Radio Frequency Transfer

The interfacility TOC processing requirements are as follows:

a. The CPDLC system shall send an interfacility message that contains the Context Management Application (CMA) logon information (e.g., aircraft identification (AID), 24-bit aircraft address, and CPDLC application version information) to a data link capable facility after the flight plan has been forwarded to that data link capable facility. The CPDLC system shall forward the CMA logon information for the aircraft, if known, regardless of the data link operational state (i.e., On or Off) in the sending and receiving facilities.

b. The CPDLC system shall store the CMA logon information for the specified aircraft after receipt. After receiving the CMA logon information, the CPDLC system shall attempt to establish a session with the specified aircraft as defined in Section 3.2.3.2.1. The CPDLC system shall prohibit the assignment of Data Link Eligibility for an aircraft until the CPDLC system receives an indication that it is the Current Data Authority.

c. The CPDLC system shall use the Next Data Authority (uM160) message element to notify the avionics of the Next Data Authority.

d. For interfacility hand-offs between data link capable facilities, where the receiving facility has IC disabled, the CPDLC system shall indicate to the sending facility that the Contact message element should be used for the subsequent interfacility TOC.

e. For interfacility hand-offs between data link capable facilities, where the receiving facility has IC enabled and the receiving sector has its sector TOC mode set to off, the CPDLC system shall indicate to the sending facility that the Contact message element should be used for the subsequent interfacility TOC.

f. For interfacility hand-offs between data link capable facilities, where the receiving facility has IC enabled and the receiving sector has its sector TOC mode set to automatic or manual, the CPDLC system shall indicate to the sending facility that the message element adapted (see Section 3.2.2.3.1, item b) for interfacility TOC with IC should be used for the subsequent interfacility TOC with the identified aircraft.

g. If the aircraft was handed off to an adjacent facility that has data link enabled and a TOC uplink was not sent due to a manual controller input to end the session with the aircraft, the CPDLC system shall send an interfacility message to transfer Data Link Eligibility to the appropriate sector in the adjacent facility.

h. After receiving the interfacility message to transfer Data Link Eligibility for an aircraft, the CPDLC system shall establish eligibility for the specified aircraft at the sector with track control.

i. When status changes to application error, communication system failure, sent, unable, or wilco for an outgoing interfacility TOC uplink message involving an adjacent facility with data link enabled, the CPDLC system shall send the uplink message status to that adjacent facility. After receiving a wilco response to the outgoing interfacility TOC uplink message (see section 3.2.3.2.4), the sending facility will terminate the session with the aircraft.

j. The CPDLC system shall accept an interfacility message that indicates the current status of a TOC uplink message. After receiving an interfacility message that indicates a positive response to a TOC uplink message, the receiving facility shall establish eligibility for the aircraft at the sector with track control.

3.2.2.3 Initial Contact (IC)

The IC Service may be enabled to support the pilot "check-in" procedure with the next sector. Check-in requires the pilot to downlink the assigned altitude of the aircraft. The IC Service verifies the assigned altitude and provides an indication to the controller if a mismatch is detected.

3.2.2.3.1 Requirements for Use

The requirements for IC are as follows.

a. The CPDLC system shall provide the capability to either adapt the use of the Monitor (uM120) or Contact (uM117) message element for use with intrafacility TOC when IC is enabled.

b. The CPDLC system shall provide the capability to adapt the use of either the Monitor (uM120) or Contact (uM117) message element to return to the sending facility for use with interfacility TOC when IC is enabled.

c. For voice radio frequency change uplinks when IC is enabled and the receiving sector's sector TOC mode is automatic or manual, the CPDLC system shall use the adapted message element for the TOC uplink from the sending sector.

d. The CPDLC system shall automatically uplink the Confirm Assigned Level message element (uM135) after Data Link Eligibility has been transferred, except when the transfer is the result of a controller input action to acquire eligibility from another sector within the facility.

e. The CPDLC system shall automatically uplink the Confirm Assigned Level message element (uM135) after Data Link Eligibility is assigned as the result of a manual start session input.

f. When the Assigned Level message element (dM38) is received in response to the Confirm Assigned Level message element (uM135), the CPDLC system shall use the included altitude for IC processing for the specified Flight ID (FLID).

g. When a message element other than the Assigned Level message element (dM38) is received in response to the Confirm Assigned Level uplink message, the CPDLC system shall indicate an error to the controller.

h. When the altitude data is received, the CPDLC system shall compare the pilot's downlinked altitude with the flight plan altitude or the interim altitude. If the pilot's downlinked altitude matches with either the flight plan altitude or interim altitude, no further processing is required. If the pilot's downlinked altitude and the aircraft's compared altitude in the database do not match, the CPDLC system shall provide an indication in the aircraft's Full Data Block (FDB) and in the Status List.

3.2.2.4 Altimeter Setting (AS)

The AS Service will provide an automatic and manual means for uplinking altimeter setting data to aircraft. The en route computer system currently maintains barometric pressure information for each altimeter reporting station. With the AS Service, the altimeter setting data will be automatically uplinked to aircraft based on the aircraft's altitude and position. If necessary, the controller may manually initiate an altimeter setting uplink.

3.2.2.4.1 Requirements for Use

The CPDLC system shall provide the capability to uplink AS data via a manual input.

The CPDLC system shall automatically generate an AS uplink message for a data link capable aircraft when the aircraft's Mode-C or controller entered reported altitude is below FL180, and Data Link Eligibility for the current data link session is first assigned in the facility for the aircraft, and the aircraft's track is within a Fix Posting Area (FPA) owned by the sector with Data Link Eligibility.

The CPDLC system shall automatically generate an AS uplink message for a data link capable aircraft when the aircraft's Mode-C or controller entered reported altitude is below FL180 and the aircraft's track crosses an FPA boundary.

The CPDLC system shall automatically generate an AS uplink message for a data link capable aircraft when the aircraft's Mode-C or controller entered reported altitude is at or above FL180, and the CPDLC system accepts an interim or assigned altitude below FL180 that does not result in an AA uplink message.

The CPDLC system shall automatically generate an AS uplink message for a data link capable aircraft when the aircraft's Mode-C or controller entered reported altitude is at or

above FL180, the aircraft has an interim or assigned altitude below FL180, and the aircraft's track crosses an FPA boundary.

The CPDLC system shall use the altimeter setting value assigned to the FPA within which the track of the aircraft is located for the uplink message.

If the altimeter setting data is more than an adaptable parameter amount of time old, the CPDLC system shall prohibit the uplink of the altimeter setting data. When an uplink of altimeter setting data is prohibited, the CPDLC system shall notify the controller.

The CPDLC system shall use the Altimeter message element (uM213) in the composition of the AS uplink message.

3.2.2.5 Menu Text (MT)

The MT Service will permit the controller to uplink a pre-defined set of messages to pilots. These messages will be displayed in a Menu Text List at the sector for selection by the controllers. The MT Service will permit the controller to direct a message either to one aircraft or to all aircraft with which the controller is communicating via CPDLC-IA Services.

3.2.2.5.1 Requirements for Use

The Menu Text List location on the display shall be relocatable via a controller input action.

Each menu entry will include the following components:

a. *Referent* - The first field will contain the referent. The referent uniquely identifies the menu entry for uplink.

b. *Operational Information* - The pre-defined alphanumeric text in each menu entry (defined during menu build) will indicate the operational nature of the message.

The CPDLC system shall provide a specific controller input action to display or suppress the entire Menu Text List. The CPDLC system shall provide the capability to suppress and display individual menu entries of a Menu Text List at a sector. When a menu entry is suppressed from display, it shall continue to be usable. A specific controller input action shall be provided to cause the re-display of all menu entries previously suppressed from the Menu Text List.

The CPDLC system shall permit the concatenation of the Proceed Direct To Position message element (uM74) and the Cleared Route Clearance message element (uM80) in the same menu entry.

With the exception of uM74 and uM80, the CPDLC system shall prohibit the concatenation of message elements from the same service type in the same menu entry.

3.2.2.5.2 Use of Menu Entries for ATC Message Composition

The CPDLC system shall provide the capability to identify menu entries for uplink to aircraft by the use of menu referents. The uplink message resulting from the menu entry selection shall be monitored by the CPDLC system in the same manner as any other manual and automatic CPDLC-IA uplink message.

Any entry in the Menu Text List shall be selectable by the controller for uplink to one or to all data link capable aircraft with which the sector has Data Link Eligibility.

An uplink message selected for uplink to all aircraft for which the sector has Data Link Eligibility will be referred to as an ALL uplink message. The CPDLC system shall provide the capability to use uplink message elements uM157, uM183, uM196, uM203, and uM205 in an ALL uplink message. The CPDLC system shall send one uplink message to each eligible aircraft when an ALL uplink message is selected for uplink. The CPDLC system shall generate one Status List entry to represent the ALL uplink message.

For an ALL uplink message that does not require a response, the CPDLC system shall remove the Status List entry after an adaptable parameter amount of time.

For an ALL uplink message that requires a response, the CPDLC system shall assign a positive pilot response message status value to the Status List entry representing the ALL uplink message only after all of the aircraft that received the uplink have either issued a response or been assigned a non-positive status value. (See section 3.2.3.1.1 for a list of status values.)

For an ALL uplink message that requires a response, the CPDLC system shall generate a separate Status List entry for an uplink message that is part of an ALL uplink message and results in a non-positive status value.

The CPDLC system shall apply the automatic time-out of a Status List entry to the Status List entry representing the ALL uplink message, only after all of the aircraft that received the uplink have issued a response or been assigned a non-positive status value.

3.2.2.5.3 Supervisory On-Line Menu Build Capabilities

The CPDLC system shall support supervisory input actions to add, modify, and delete menu entries associated with any airspace identified by a specific sector identifier. Once the menu entries have been changed, the Menu Text List shall be updated without interrupting the CPDLC system's operations.

3.2.2.6 Altitude Assignment (AA)

AA is a manually initiated service that allows the controller to uplink a message directing the pilot to either maintain a specified level, climb to a specified level, or descend to a

specified level. The AA uplink message may specify either a single level or vertical range (i.e., block level). The AA Service will include automatic update of the appropriate Host Computer System (HCS) stored flight plan altitude.

3.2.2.6.1 Requirements for Use

The CPDLC system shall provide the capability to uplink an assigned single altitude by using the current assigned altitude message input. The CPDLC system shall provide the capability to uplink an interim single altitude by using the current interim altitude message input. The CPDLC system shall provide the capability to uplink an assigned block altitude by using the current assigned altitude message input. The CPDLC system shall provide the capability to uplink an assigned single altitude independent from the current assigned altitude message input. The CPDLC system shall provide the capability to uplink an interim single altitude independent from the current interim altitude message input. The CPDLC system shall provide the capability to uplink an assigned block altitude independent from the current assigned altitude message input.

The CPDLC system shall provide the capability to uplink an altitude, speed, and/or heading in the same input action (see sections 3.2.2.7 and 3.2.2.8). The CPDLC system shall enable the controller to specify the insertion of the Then message element (uM165) between the altitude, speed, and/or heading in the input action.

The CPDLC system shall provide the capability to uplink a flight plan-stored assigned altitude and remove an interim altitude assignment in one input action. The CPDLC system shall provide the capability to uplink the altitude currently displayed in the FDB.

The CPDLC system shall append the Altimeter message element (uM213) to the AA uplink message if the altitude in the AA uplink message is below FL180.

The CPDLC system determines, depending on reported altitude of the aircraft, a message element (uM19, uM20, or uM23) for use in encoding an uplink altitude message as follows. When the reported altitude is within conformance limits of the altitude to be uplinked, the Maintain Level message element (uM19) shall be used to indicate an AA instruction to maintain the specified level. When the reported altitude is less than the altitude to be uplinked, the Climb To Level message element (uM20) shall be used to indicate an AA instruction to climb to the specified level. When the reported altitude is greater than the altitude to be uplinked, the Descend To Level message element (uM23) shall be used to indicate an AA instruction to descend to the specified level.

3.2.2.7 Speed Assignment (SP)

SP is a manually initiated service that allows the controller to uplink a message directing the pilot to either maintain a specified speed, maintain a specified speed or greater, or

maintain a specified speed or less. The SP Service will not update the HCS stored flight plan speed.

3.2.2.7.1 Requirements for Use

The CPDLC system shall provide the controller with the capability to uplink a speed in knots independent from the current amendment message input. The CPDLC system shall provide the controller with the capability to uplink a speed in Mach independent from the current amendment message input.

For speed assignment instructions to maintain the specified speed, the CPDLC system shall use the Maintain Speed message element (uM106). For speed assignment instructions to maintain the specified speed or greater, the CPDLC system shall use the Maintain Speed Or Greater message element (uM108). For speed assignment instructions to maintain the specified speed or less, the CPDLC system shall use the Maintain Speed Or Less message element (uM109).

3.2.2.8 Heading Assignment (HD)

HD is a manually initiated service that allows the controller to uplink a message directing the pilot to fly a specified heading.

3.2.2.8.1 Requirements for Use

The CPDLC system shall provide the controller with the capability to uplink a heading in degrees. The CPDLC system shall use the Fly Heading message element (uM190) for HD uplink messages.

3.2.2.9 Route Clearance (RC)

RC is a manually initiated service that allows the controller to uplink a message directing the pilot to proceed via a specified routing to a specified position and a message to proceed direct to a position. The RC Service will include automatic update of the HCS stored flight plan route.

3.2.2.9.1 Requirements for Use

The CPDLC system shall provide the capability to uplink a route clearance by using the current amendment message input. For route clearance instructions to proceed via a specified route, the CPDLC system shall use the Cleared Route Clearance message element (uM80).

The CPDLC system shall provide the capability to uplink a clearance instruction to proceed direct to a specified position. For clearance instructions to proceed direct to a specified position, the CPDLC system shall use the Proceed Direct To Position message element (uM74).

3.2.2.10 Pilot-Initiated Downlink (PD)

The PD Service will support downlinks of selected pilot-initiated requests according to Appendix A. These downlinks will be displayed in a pilot-initiated downlink list together with the associated controller replies.

3.2.2.10.1 Requirements for Use

The CPDLC system shall provide an indication in the aircraft's FDB when a pilot-initiated downlink is received for that aircraft.

The Pilot-Initiated Downlink List location on the display shall be relocatable via a controller input action.

Each entry in the Pilot-Initiated Downlink List shall contain the aircraft identification of the aircraft that downlinked the message, time in hours and minutes contained in the time stamp of the downlink message, the textual content of the downlink message, and the paired controller response.

The CPDLC system shall display the pilot-initiated downlinks in the order of receipt. The CPDLC system shall support the use of the Request Level and Preferred Level message elements (dM6 and dM106) for pilot-initiated downlinks.

For the Request Level downlink message element (dM6), the CPDLC system shall enable the controller to respond with an Unable (uM0), or Standby (uM1), or Climb To (uM20), or Descend To (uM23), or Maintain (uM19) message element. The CPDLC system shall update the assigned altitude in the flight plan when the controller selects the altitude uplink. The CPDLC system shall remove the interim altitude from the flight plan if set when the controller selects the altitude uplink. See Section 3.2.2.6.1 for requirements for determining which message element to uplink for the altitude assignment.

If the controller responds with Unable, the CPDLC system shall display an Unable indication in the Pilot-Initiated Downlink List until timed out by the CPDLC system. If the controller responds with a clearance instruction, the CPDLC system shall process the

clearance instruction in accordance with Section 3.2.3.1. If the controller responds with Standby, the CPDLC system shall display a Standby indication on the Pilot-Initiated Downlink List until the controller responds with either an Unable or altitude uplink message.

When Data Link eligibility is transferred within the facility, the CPDLC system shall forward all outstanding downlink messages for the aircraft to the sector that received Data Link eligibility.

For downlink message elements dM0 through dM5, dM38, dM62, dM63, dM100, and dM107 received not in response to an uplink message, the CPDLC system shall terminate the aircraft's session.

The CPDLC system shall return the Service Unavailable message element if a pilot-initiated downlink message is received when eligibility has not been assigned.

The CPDLC system shall return the Service Unavailable message element appended with the Free Text message element (uM183) with value "CPDLC requests not supported at this time" if a pilot-initiated downlink message is received when the PD Service is disabled.

The CPDLC system shall return the Service Unavailable message element appended with the Free Text message element (uM183) with value "CPDLC requests not supported at this time" if a pilot-initiated downlink message is received when the data link eligible sector has its sector TOC mode set to Off.

3.2.3 CPDLC-IA Service On-Line Support Functions

The CPDLC system will provide on-line support for the CPDLC-IA Service. These functions provide the necessary capabilities required for processing of CPDLC-IA messages. These support functions will be:

a. CPDLC-IA uplink message monitoring
b. Data link session and eligibility
c. Sector settings
d. Data recording
e. Supervisory input actions
f. Failure recovery
g. Context management application
h. Simulation for training and testing (i.e., Dynamic Simulation (DYSIM))
i. Error messages and aborts.

3.2.3.1 CPDLC-IA Uplink Message Monitoring

The CPDLC system shall maintain the status of each CPDLC-IA uplink message. The CPDLC system shall provide a specific controller input action to delete an uplink message regardless of its status value. The CPDLC system shall limit the number of outstanding uplink messages per aircraft to an adaptable maximum value.

The CPDLC system shall permit an automated hand-off for an aircraft that has an outstanding TOC uplink message.

3.2.3.1.1 CPDLC-IA Uplink Message Status Values

Message status values will be used to indicate the state of each CPDLC-IA uplinked message. The CPDLC system shall support the following message status values: Application Error, Communications System Failure, Held, Sent, Time-out, Unable, Negative, Wilco, Roger, Affirmative, Standby, and No Response Required. The possible message status values are defined as follows:

a. Application Error

   The application error message status indicates that the CPDLC system has received an Error downlink message element (dM62) from the aircraft for the referenced uplink message or a local processing error for the uplink message was encountered.

b. Communications System Failure

   The communications system failure message status value indicates that the data link session that was used to send the uplink message was aborted.

c. Held

   The held message status value indicates that a controller input action is required to uplink a TOC message. The Held status shall be applicable for manual mode of TOC in which the controller is required to take an action to uplink the TOC message.

d. Sent

   The sent message status value indicates that the CPDLC system has output to the commercial service provider for communications with the aircraft, a CPDLC-IA uplink message that requires a response.

e. Time-out

   The time-out message status value indicates that an adaptable time has expired without receipt of a pilot response to a previously uplinked message.

f. Unable and Negative

   The unable and negative message status values indicate that the CPDLC system has received a valid negative pilot response to the previously uplinked message.

g. Wilco, Roger, and Affirmative

The wilco, roger, and affirmative message status values indicate that the CPDLC system has received a valid positive pilot response.

h. Standby

The standby message status value indicates that the CPDLC system has received a valid standby response from the pilot.

i. No Response Required

The no response required status value indicates that the uplink message does not require a response. Uplink messages that do not require a response are not assigned a message status value of sent upon uplink.

3.2.3.1.2 CPDLC-IA Status Displays

The status of each CPDLC-IA uplink message will be displayed in either or both the Status List Display and the Full Data Block (FDB) according to the following requirements.

3.2.3.1.2.1 Status List Display

A separate Status List shall be displayable at each sector. As the status for each CPDLC-IA message changes, the status change shall be displayed, subject to filter settings, in the Status List at the sector that originated the uplink message. The Status List shall be automatically suppressed whenever there is no CPDLC-IA uplink message status to display. If the Status List was automatically suppressed, the CPDLC system shall redisplay the Status List when a new uplink message, not currently suppressed by filter settings, is added to the Status List.

The CPDLC system shall provide the capability at the sector to display, suppress, and relocate the Status List. The CPDLC system shall provide a controller input action to suppress the displaying in the Status List of an uplink message based on the following status values: Sent, No Response Required, Wilco, Affirm, and Roger. The CPDLC system shall provide a controller input action to suppress the displaying in the Status List of uplink messages according to the service type for the uplink message (e.g., TOC, AA). The CPDLC system shall treat the filtering of the Status List according to status value with a higher priority than the filtering of the Status List according to service type. For example, if AA uplinks are filtered from the Status List and the pilot replies to an AA uplink with an unable response, the AA uplink message will be shown in the Status List since the unable status value cannot be suppressed.

The CPDLC system shall automatically remove from the status list display an uplink message that has been assigned a positive pilot response status value after an adaptable amount of time. The CPDLC system shall remove the uplink message that does not require a response from the Status List a parameter amount of time after uplink.

3.2.3.1.2.2 Full Data Block

The CPDLC system shall display the Data Link Eligibility symbol in the FDB at the sector that is assigned Data Link Eligibility. At sectors that do not have Data Link Eligibility with an aircraft that has a data link session, the CPDLC system shall display the data link session symbol in the FDB for that aircraft.

The CPDLC system shall provide an FDB display for each message status value for each CPDLC-IA service.

3.2.3.2 Data Link Session and Eligibility

The CPDLC system maintains a session[1] for each aircraft that qualifies for the CPDLC-IA Service. The CPDLC system shall indicate that an aircraft has a data link session at each sector displaying the FDB for the aircraft. The specific conditions under which Data Link Eligibility may be initiated or terminated are described in the following sections.

For aircraft having a data link session, only one sector shall be designated by the CPDLC system as eligible for initiating uplink messages, receiving pilot responses, and receiving pilot-initiated downlinks.

The CPDLC system will support a specific controller input action to initiate Data Link Eligibility and to acquire Data link Eligibility from another sector. The specific conditions under which Data link Eligibility may be initiated or acquired are described in the following sections.

3.2.3.2.1 Data Link Session Initiation

The CPDLC system supports automatic and manual methods of session initiation as well as session initiation resulting from a Next Data Authority (NDA) indication. A session is successfully established when the aircraft system responds positively to the session initiation request from the CPDLC system.

The CPDLC system shall reject aircraft initiated data link sessions. The CPDLC system shall include the free text message element (uM183) with the text "CPDLC-air initiation not permitted" as the CPDLC *Reject Reason* parameter when rejecting the aircraft initiated CPDLC.

---

[1] A session is equivalent to a CPDLC dialogue in the ATN SARPs.

3.2.3.2.1.1 Automatic Data Link Session Initiation

The CPDLC system shall automatically initiate the establishment of a CPDLC session (i.e., invoke a CPDLC-start request) with an aircraft when:

a. Radar correlation with a track begins
b. The aircraft is within an adaptable parameter distance of the facility's boundary
c. There is no current CPDLC session with that aircraft
d. Automatic session establishment is enabled for the aircraft

3.2.3.2.1.2 Manual Data Link Session Initiation

A controller input action shall be provided to initiate session establishment.

The CPDLC system shall attempt to establish a session (i.e., invoke a CPDLC-start request) with an aircraft when:

a. A controller input action indicating session establishment is from a controller having track control
b. There is no current CPDLC session with that aircraft

When a session cannot be established as a result of a controller session initiation action, the CPDLC system shall provide an indication to the controller.

3.2.3.2.1.3 NDA Data Link Session Initiation

The CPDLC system shall automatically attempt to establish a CPDLC session (i.e., invoke a CPDLC-start request) with an aircraft when:

a. An adaptable parameter time after receipt of an indication that the CPDLC system is the next data authority, and
b. There is no current CPDLC session with that aircraft.

The CPDLC system shall enforce the NDA designation for an aircraft until one of the following events occurs:

a. The session with the aircraft is terminated
b. The CPDLC system receives the Current Data Authority message element (dM99) from the aircraft
c. An indication is received from another facility to transfer Data Link Eligibility

3.2.3.2.2 Initiating Data Link Eligibility

For aircraft that have a Data Link Session, Data Link Eligibility shall be assigned when the track control for the aircraft is received from a non-data link capable facility.

For aircraft that have a Data Link Session, the CPDLC system shall assign Data Link Eligibility to the sector with track control if the flight originated within the boundaries of the ARTCC.

For aircraft that have a Data Link Session, the CPDLC system shall assign Data Link Eligibility to the sector with track control if the Data Link Session was established as the result of a manual data link session initiation.

For an aircraft that has a Data Link Session, Data Link Eligibility shall be assigned when a controller input action is taken to designate Data Link Eligibility for an aircraft, and no other sector has Data Link Eligibility for that aircraft.

The CPDLC system shall assign Data Link Eligibility for an aircraft to the sector with track control when the CPDLC system receives a Current Data Authority message element (dM99) from the aircraft, and no other sector has Data Link Eligibility for that aircraft.

3.2.3.2.3 Transferring Data Link Eligibility

For aircraft that have a Data Link Session, Data Link Eligibility shall be transferred under any of the following conditions:

a. A positive pilot response to a TOC uplink message has been received.
b. A controller input action was taken to transfer Data Link Eligibility from another sector in the same facility to his or her own sector independently of TOC uplink message processing. This action may be taken in conjunction with logic check override of track control. See section 3.2.2.2 for Data Link Eligibility transfer in conjunction with interfacility TOC uplink messages.
c. A controller input action was taken from the sector with Data Link Eligibility to transfer Data Link Eligibility to the sector with track control.
d. An Accept Hand-off input action is accepted for an aircraft that was handed off using an input option to transfer eligibility with track control.

3.2.3.2.4 Terminating a Data Link Session

The CPDLC system shall terminate a Data Link Session for an aircraft under any of the following conditions:

a. The Data Link Eligibility is transferred to a sector in an adjacent facility

b. The track is dropped

c. The flight plan is dropped from the CPDLC system's database

d. The aircraft terminates the session.

The CPDLC system shall enable the controller to terminate a Data Link Session from the sector with eligibility. When an aircraft's session is terminated manually, the CPDLC system shall disable automatic session initiation for that aircraft.

When an aircraft's session is terminated due to "Commanded Termination" (sent or received), the CPDLC system shall disable automatic session initiation for that aircraft.

The CPDLC system shall remove the data link session and eligibility symbology from all displays for the aircraft after the aircraft's session is terminated. Upon initiation of normal session termination with outstanding downlink messages, the CPDLC system shall uplink the Unable message element (uM0) appended with the Free Text message element uM183 with value "Make request to next controller" for each outstanding downlink message.

3.2.3.3 Sector Settings

The CPDLC system shall provide the capability to override the default CPDLC-IA Service's settings for each sector. The CPDLC-IA Service's settings shall be displayable in the Sector Settings List at the sector.

The CPDLC system shall provide the capability to set a CPDLC mode of operation at each sector. This mode of operation is referred to as the sector TOC mode. The CPDLC system shall support the Automatic sector TOC mode. The CPDLC system shall support the Manual sector TOC mode. When the sector TOC mode is set to Off, the CPDLC system shall prohibit the use of all other data link services at the sector. When the sector TOC mode is set to Automatic or Manual, the CPDLC system shall enable the use of all facility-wide enabled data link services at the sector. When the sector TOC mode is set to Off, the CPDLC system shall suppress the Menu Text List.

The CPDLC system shall provide a controller input action to switch between manual, automatic, and off sector TOC modes.

3.2.3.3.1 Sector Settings Display

The CPDLC system shall provide a controller input action to display the sector settings list at the sector. The sector settings values shall include, at a minimum, the parameters and possible values as listed in Table 3-1.

Table 3-1. Sector Settings Display Parameters

INDICATOR	DISPLAY VALUES
TOC Mode	AUTOMATIC, MANUAL, or OFF
Menu Text Display	ON or OFF
Status List Display	ON or OFF
Status List Services Suppressed	Services
Status List Status States Suppressed	Status Values
Service On	Services
Pilot-Initiated Downlink Display	ON or OFF

The Sector Settings Display will indicate the value of the CPDLC-IA Service's parameters applicable to the sector as follows:

a. TOC Mode parameter shall indicate whether the sector is currently operating in the automatic, manual, or off mode for the TOC Service. If the sector TOC mode is set to off, all other data link services enabled for the facility are disabled at the sector. If the sector TOC mode is set to automatic or manual, all other data link services enabled for the facility are enabled at the sector. (See Section 3.2.3.3.)

b. Menu Text Display parameter shall indicate whether the Menu Text Display for the sector control position is currently enabled.

c. Status List Display parameter shall indicate whether the Status List for the sector is currently enabled.

d. Status List Services Suppressed parameter shall indicate which CPDLC-IA Service(s) are suppressed from the Status List Display.

e. Status List Status States Suppressed parameter shall indicate the status value(s) (i.e., Sent, No Response Required, Wilco, Affirm, and Roger) that are suppressed.

f. Service On parameter shall indicate which CPDLC-IA Service(s) are enabled (e.g., TOC and IC) for the entire en route facility.

g. Pilot-Initiated Downlink Display parameter shall indicate whether the Pilot-Initiated Downlink List for the sector is currently enabled.

3.2.3.4 Data Recording

When the CPDLC-IA Service is enabled, the CPDLC system shall record the following data in accordance with FAA Order 7210.3:

a. All messages exchanged between the CPDLC system and the commercial service provider's communications network
b. All controller and supervisory input actions and associated display outputs
c. All interfacility communication

3.2.3.5 Supervisory Input Actions

In support of the CPDLC-IA Service, the CPDLC system provides the following supervisory capabilities:

a. Initialize and terminate CPDLC-IA Service
b. Voice radio frequency assignment
c. On-line menu build (refer to section 3.2.2.5.2)
d. Individual CPDLC-IA Service on/off
e. Display CPDLC-IA Service status
f. HCS planned shutdown or Radar Data Processing (RDP) tie-off

3.2.3.5.1 Initialize CPDLC-IA Service Processing

The CPDLC system shall provide a specific supervisory input action to initialize or terminate the CPDLC-IA Service.

3.2.3.5.2 Voice Radio Frequency Assignment

The CPDLC system shall provide an input action to override the radio frequencies assigned to a sector, an FPA, a TRACON, and an adjacent ARTCC. The CPDLC system shall provide a supervisory input action to view the radio frequencies for the facility.

3.2.3.5.3 Individual CPDLC-IA Service On/Off

The CPDLC System shall prohibit the capability to disable the TOC service on a facility basis whenever the CPDLC-IA service is enabled. The CPDLC system shall provide a supervisory input action to turn ON or OFF, on a facility basis, the following services: IC, MT, AS, AA, SP, HD, RC, and PD. The default setting for IC, MT, AS, AA, SP, HD, RC, and PD after CPDLC-IA Service initialization shall be ON. Following the termination of a CPDLC-IA Service via supervisory input, no new CPDLC-IA messages for that service shall be initiated. Uplink messages transmitted prior to termination of a CPDLC-IA Service via supervisory input shall be allowed to complete.

3.2.3.5.4 Display CPDLC-IA Service Status

The CPDLC system shall provide a supervisory input action to view the status of CPDLC-IA Services.

3.2.3.5.5 HCS Planned Shutdown or RDP Tie-off

In the event of HCS Planned Shutdown or RDP Tie-off, the CPDLC-IA Service shall be automatically terminated.

Whenever RDP Tie-off or Planned Shutdown is activated in the HCS, the status of all messages for each sector shall be printed on the flight strip printer (FSP).

3.2.3.6 Failure Recovery

3.2.3.6.1 CPDLC System Failure Recovery

The CPDLC system provides an essential service according to the definition of Essential Service in the NAS-SR-1000. As such, the CPDLC system shall have 0.9997 availability. If the CPDLC system is lost, the restoration time of the CPDLC system shall be 10 minutes or less. No single point of failure shall cause a loss of CPDLC-IA Services. Loss of the CPDLC-IA Service is defined as the loss of the capability at any sector to establish sessions and to send and receive messages for longer than 10 minutes.

3.2.3.6.2 HCS Failure Recovery

In the event of an HCS startover or switchover, data link sessions, eligibility, Status List entries, and status values that were processed by the HCS prior to failure shall be recovered in the same manner as the existing HCS state data recovery capabilities. Additionally, the CPDLC system shall support a specific supervisory input action to limit the time from which the HCS will recover CPDLC-IA Services state data after an HCS failure. The time limit parameter for recovering CPDLC-IA Service's state data shall be adaptable, but will not exceed the maximum time from which the HCS can recover state data.

3.2.3.7 Context Management Application (CMA)

A function of the CPDLC-IA Service will be the Context Management Application (CMA). The CMA function shall comply with ATN SARPs Class I operation (Section 2.1.8).

3.2.3.7.1 Storing Aircraft Application Information

In order for the CPDLC system to transmit CPDLC-IA uplink messages to aircraft, each aircraft will have a unique identification within the National Airspace System (NAS). The CMA function shall maintain a database of aircraft application information. If an aircraft logon request is received by the CMA that contains the same unique aircraft address as a

logon entry already contained in its database, the CPDLC system shall replace the first logon entry with the second. The CPDLC system shall reject a CMA logon request if any of the following entries are absent: Flight ID, departure airport, destination airport, CPDLC application information, or CMA application information.

The CMA function shall prohibit the returning of any ground CPDLC address in response to an aircraft's logon request. This action prohibits the aircraft from initiating a CPDLC session.

3.2.3.7.2 Sending Address and Application Information Requests

The CPDLC system shall send an address and application information request message up to an adaptable maximum number of retries to the CMA to retrieve the aircraft's unique address and CPDLC application information. The address and application information request shall contain the aircraft identifier (AID) and departure and destination airports. When available in the HCS stored flight plan, the address and application information request shall also include the estimated off blocks time. When available in the HCS stored flight plan, the address and application information request shall also include the aircraft's address.

3.2.3.7.3 Processing Address and Application Information Requests

The CMA shall accept address and application information requests from the CPDLC system. The CMA shall attempt to match the entries in the address and application information request to the same entries in the logon data. If a match is found, the CMA shall send the unique aircraft identifier and CPDLC application information to the CPDLC system. If a match is not found, the CMA shall send an indication to the CPDLC system indicating that the aircraft is not logged on.

The CMA shall remove any logon entries that have been in the database longer than an adaptable parameter amount of time.

3.2.3.8 Simulation for Training and Testing

The ATC simulation software used in the HCS shall be modified to provide the capability to simulate ATC operations with the CPDLC-IA Service enabled. Uplink messages to simulated aircraft shall be displayed at a simulated pilot position. The CPDLC system shall provide the capability to simulate the elapsed time for transmission of a CPDLC-IA message. The simulated elapsed time for transmission shall be an adaptable parameter. The CPDLC system shall provide the capability to enter a pilot response message to a CPDLC-IA uplink message at a simulated pilot position. The CPDLC system shall provide the capability to generate an automated wilco response to simulated TOC uplink messages. The CPDLC system shall provide the capability to generate an automated response to simulated uplink messages other than TOC. The CPDLC system shall provide the capability to distribute the

automated response among all valid responses for a given simulated uplink message other than TOC. The CPDLC system shall enable the simulated pilot position to enter a response prior to the automated pilot response. The CPDLC system shall provide the capability to enter pilot-initiated downlink messages at a simulated pilot position.

3.2.3.9 Error Messages and Aborts

The CPDLC system will process uplink and downlink error messages. In addition, the CPDLC system will detect subsystem aborts and react to them in a planned manner.

3.2.3.9.1 Uplink and Downlink Error Messages

For uplinking error information, the CPDLC system shall use the Error message element (uM159). The CPDLC system shall indicate an error to the controller for received messages that contain an error.

The CPDLC system shall display to the controller an Application Error status and reason for the referenced uplink message when an Error downlink message element (dM62) is received. The CPDLC system shall display to the controller an Application Error status and reason for an uplink message when a local processing error is encountered.

3.2.3.9.2 Aborts

If an abort is generated, the CPDLC system shall terminate the data link session. If an abort is generated, the CPDLC system shall display to the controller a communication system failure status for all uplink messages pertaining to the terminated session. If an abort is generated, the CPDLC system shall display to the controller a communication system failure status for all downlink messages pertaining to the terminated session. The CPDLC system shall provide an indication to the controller if the abort is a pilot-initiated commanded termination abort.

3.2.3.9.3 Significant Events

The CPDLC system shall provide an indication at the System Maintenance Monitoring Console (SMMC) when a system error occurs. The CPDLC system shall provide an indication at the SMMC when a significant event is encountered. The CPDLC system shall indicate when the capacity for maintaining status data for all sectors is within an adaptable percentage of the maximum volume of status data allowed in the CPDLC system.

3.2.3.9.4 Not Current Data Authority Error

The CPDLC system shall remove Data Link Eligibility, if assigned, when the Not Current Data Authority downlink message element (dM63) is received. When the Not Current Data

Authority downlink message element is received, the CPDLC system shall place all transactions for the aircraft in Application Error status. When the Not Current Data Authority downlink message element is received, the CPDLC system shall display an indication to the controller that such a message has been received.

3.2.3.10 CPDLC-IA Network Management

The network management functions are intended to facilitate online monitoring of transit delay metrics.

3.2.3.10.1 Transit Delay Performance Monitoring

The CPDLC system shall provide the capability to enable or disable the use of logical acknowledgment messages. The CPDLC system shall use logical acknowledgment messages to monitor in real time the mean transit delay incurred by CPDLC messages. The CPDLC system shall use logical acknowledgment messages to monitor in real time the 95th percentile transit delay incurred by CPDLC messages. The CPDLC system shall prohibit the displaying of logical acknowledgements (LACK) to the controller.

The CPDLC system shall provide an indication whenever the uplink transit delay exceeds the threshold value for mean transit delay. The CPDLC system shall provide an indication whenever the uplink transit delay exceeds the threshold value for the 95th percentile transit delay.

The CPDLC system shall provide an indication whenever the downlink transit delay exceeds the threshold value for mean transit delay. The CPDLC system shall provide an indication whenever the downlink transit delay exceeds the threshold value for the 95th percentile transit delay.

The CPDLC system shall provide an indication when the CPDLC ground system throughput efficiency falls below a site adaptable level, with a nominal threshold of 0.95.

3.2.4 CPDLC-IA Service Off-line Support Functions

The CPDLC system will provide off-line support for CPDLC-IA Service. This support will include:

a. Data reduction of recorded data

b. Adaptation data generation.

3.2.4.1 Data Reduction of Recorded Data

The CPDLC system shall support the processing of recorded data for the purpose of collecting statistics. The CPDLC system shall produce a report for transit delay performance. The CPDLC system's statistics collected shall be consistent with the statistics collected in the

current HCS. The statistics collected for CPDLC system shall be presented in one or more reports similar to those reports currently generated by the support functions of the HCS.

3.2.4.2 Adaptation Data Generation

The adaptation data is meant to tailor the CPDLC-IA Service to each ARTCC and/or to each sector within the ARTCC.

To support the automatic generation of the TOC message, the CPDLC system shall provide the capability to adapt default and alternate radio frequencies to FPAs and to sectors. The CPDLC system shall maintain an explicit association of radio frequencies with FPAs and sectors within the ARTCC, and with sectors in adjacent ARTCCs, and with positions in TRACONs for which transfer of communications may be exchanged.

The following subsections present additional requirements for CPDLC-IA Service's adaptation data.

3.2.4.2.1 Menu Build Capability

The CPDLC system shall provide the offline capability to adapt menu entries for the Menu Text List. The off-line menu build function will include the following:

a. To identify and select a menu entry, the CPDLC system shall provide the capability to assign a unique message referent. The message referent shall consist of one to four alphanumeric characters with the first character limited to an alpha character.

b. The menu build capability shall consist of the generation of displayable menu entries by composing alphanumeric text. The maximum length of a menu entry shall be an adaptable parameter number of characters.

c. The CPDLC system shall provide the capability to associate a menu entry with an uplink message element from Tables A-2 through A-7, and A-9 in Appendix A.

d. The capability shall be provided to assign a menu entry to one or more sectors. The contents of the Menu Text List displayed at the sector shall be the union of the menu entries adapted to the sector(s) assigned to that sector.

e. The CPDLC system shall provide an offline capability to review the contents of menu entries. The CPDLC system shall provide an offline capability to edit the contents of menu entries. The Menu Text List shall be accessible by specification of the sector.

The CPDLC system shall provide the capability to adapt the Status List display symbology for each menu entry. When a menu entry is selected for uplink, its Status List symbology shall be displayed in the Status List.

3.2.4.2.2 Adapted Status Symbology

The CPDLC system shall provide the capability to adapt the symbology for the following FDB displays:

a. Data Link Session
b. Data Link Eligibility
c. TOC uplink message with a status value of sent, standby, or time-out
d. Uplink message other than TOC with a status value of sent, standby, no response required, or time-out
e. Downlink message received, but not yet answered

The CPDLC system shall provide the capability to adapt the symbology for each message status value in the Status List display.

3.2.5 ATN SARPs Messages

For uplinks, the CPDLC system shall use uplink message elements from Appendix A only.

When the Preferred Level message element (dM106) is received in response to the State Preferred Level message element (uM231), the CPDLC system shall display the downlink message in the Pilot-Initiated Downlink List. When the Preferred Level message element (dM106) is received in response to the State Preferred Level message element (uM231), the CPDLC system shall remove the uplink message from the Status List. When a message element other than the Preferred Level message element (dM106) is received in response to the State Preferred Level uplink message, the CPDLC system shall indicate an error to the controller.

The CPDLC system shall uplink a Service Unavailable message element (uM162) as notification that the CPDLC system does not support a requested service for any downlink message element not contained in Appendix A.

3.3 External Interface Requirements

The CPDLC system shall interface to the commercial service provider via NADIN PSN in accordance with the *DLAP to VDL-2 Interface Requirements Document (IRD)*.

The CPDLC system shall provide an indication at a supervisory display when the connection to the commercial service provider is lost.

The CPDLC system shall interface to the NAS Local Area Network (LAN) in accordance with the *ARTCC NAS LAN/User Systems IRD*, NAS-IR-40010001.

The CPDLC system shall interface to the Network Systems Manager (NSM) in accordance with the *HID/NAS LAN NSM to Users IRD*, NAS-IR-90154001. The CPDLC system shall provide the following minimum interface capabilities for the NSM to allow the technician to perform monitor and control activities from a remote location:

a. Status
b. Control
c. Performance

3.4 Internal Interfaces

The software development contractor will be responsible for defining all internal interfaces.

3.5 Physical Characteristics

There are no unique requirements for physical characteristics.

3.6 System Quality Factors

The software for the CPDLC-IA Service shall be developed in accordance with a FAA approved Software Development Plan (SDP).

3.6.1 Reliability

The mean time between failures (MTBF) of the CPDLC system shall be 26,280 hours or greater.

3.6.2 Maintainability

See Section 3.2.3.6.1 for restoration time requirement.

3.6.3 Availability

See Section 3.2.3.6.1 for availability requirements.

3.7 Environmental Conditions

The are no unique environmental conditions requirements.

3.8 Transportability

There are no unique requirements for transportability.

3.9 Flexibility and Expansion

There are no unique requirements for flexibility and expansion.

3.10 Portability

The CPDLC-IA Service software not executing in the HCS shall be fully POSIX compliant as defined in FIPS PUB-151-2, Portable Operating System Interface (POSIX) System Application Program Interface ([C Language] ISO/IEC 9945-1:1990) - May 12, 1993.

3.11 CPDLC System Security

With the exception of the HCS, the CPDLC system shall provide the following controlled access protection:

a. Discretionary access control to include the ability to administratively account for individual user access to the CPDLC system

b. Discretionary access control to specific resources

c. Object reuse for select administrative data (e.g., passwords)

d. Identification and authentication of ground users

e. Audit trail of access to CPDLC system resources

The CPDLC system network management operations shall include:

a. Authentication

b. Access control mechanisms

c. Audit trail

Section 4

Qualification Requirements

4.1 General

This section defines qualification requirements for verification and testing of all functional and performance requirements stated in this specification. This section describes the following areas:

a. Test Philosophy
b. Test Objectives
c. Test Levels
d. Test Facilities
e. Test Responsibilities
f. Verification Methods
g. Test Constraints
h. Qualification Cross Reference Table

4.2 Test Philosophy

The test philosophy for the CPDLC-IA Service software is to conduct a series of tests that verify compliance with all functional and performance requirements stated in this specification. The series of tests will progress from module testing to Computer Software Unit (CSU) testing, to Computer Software Component (CSC) testing, to Computer Software Configuration Item (CSCI) testing, and to system testing. Tests will be performed in accordance with test requirements developed to accommodate each test phase. Regression tests will be performed to ensure that current system capabilities have not been affected by the incorporation of the CPDLC-IA Service. Tests performed will be recorded in test reports.

4.3 Test Objectives

The main test objectives are:

a. To ensure an orderly progression of software development and testing that is demonstrable and verifiable.

b. To ensure that the CPDLC-IA Service software meets all system requirements.

c. To ensure that integration of the CPDLC-IA Service software will successfully coexist with the En Route Computer System software in the NAS environment.

4.4 Test Levels

The requirements specified in this specification shall be verified at one or more of the four test levels, as defined below.

4.4.1 Subsystem Tests

The subsystem tests, as summarized in Table 4-1, will consist of the following:

a. Module tests, where a module is a single subroutine. Module tests will be performed by exercising each branch and every line of code in the module at least once. All modules will undergo module testing, with the exception of unmodified Commercial Off-the-Shelf (COTS) software and unmodified Government-Furnished Information (GFI) software.

b. CSU tests, where a unit is a set of closely related modules, as defined in FAA-STD-026. All CSUs will undergo unit testing, with the exception of unmodified COTS software and unmodified GFI software.

c. CSC tests, where a CSC is a set of related units performing a given function, as defined in FAA-STD-026. All COTS and GFI software will be included in CSC testing.

d. CSCI tests, where a CSCI is a set of related CSCs, as defined in FAA-STD-026. Examples of CSCIs are: real-time operational software, support software, or maintenance software. All COTS and GFI software will be included in CSCI testing.

Table 4-1. CPDLC-IA Service Subsystem Tests Summary

SUBSYSTEM TESTS		
TEST LEVELS	**RESPONSIBILITY FOR TESTS**	**LOCATION OF TESTS**
Module Test	Software Developer	Developer's Site
CSU Test	Software Developer	Developer's Site
CSC Test	Software Developer	Developer's Site
CSCI Test	Software Developer	Developer's Site

4.4.2 System Integration Testing (SIT)

The purpose of SIT (see Table 4-2) is to verify that the CPDLC-IA Services software will operate properly in the NAS environment and in accordance with the NAS system level operational and functional requirements. The SIT, which may be performed at the Federal Aviation Administration (FAA), William J. Hughes Technical Center (WJHTC), will consist of the following:

a. The government will be responsible for integrating the CPDLC-IA Service software into the En Route Computer System (e.g., at the WJHTC). The software developer will conduct formal System Tests in a simulated environment in the presence of Government representatives as part of software acceptance.

b. Operational Test and Evaluation (OT&E). The OT&E will be conducted by the Government to verify the integration and operational capabilities of the CPDLC-IA Services as an integrated part of the National Airspace System (NAS). Prior to the commencement of OT&E activities, the government, with support from the software developer, will conduct several interoperability assessments to demonstrate the interoperability among the CPDLC-IA Service software in the En Route Computer System, the ground communications system, the air/ground communications service provider's system, and the avionics system. OT&E will include evaluation of the operational suitability and effectiveness of CPDLC-IA Service with respect to ATC controller operations, flight deck operations, ground/air communications network, FAA maintenance, and FAA support functions. Testing will be conducted with live end systems, if available, and in a simulated environment. All the test data and test results will be recorded for analysis and evaluation. The software developer will support OT&E activities as required by the government. In addition, the SIT will include tests for Year 2000 (Y2K) compliance in accordance with FAA guidelines.

Table 4-2. CPDLC-IA Service System Integration Tests Summary

SYSTEM INTEGRATION TESTS		
TEST LEVELS	RESPONSIBILITY FOR TESTS	POSSIBLE LOCATION OF TESTS
Re-run of CSC and CSCI Tests	Software Developer	FAA WJHTC
OT&E	FAA	FAA WJHTC

4.4.3 Site Testing

Site Testing, outlined in Table 4-3, will be performed at the designated ATC facility and will demonstrate that the system is ready for acceptance and commissioning. Site testing will consist of re-runs of selected portions of OT&E categories, as required by the Government.

Table 4-3. CPDLC-IA Service Site Tests Summary

SITE TESTS		
TEST LEVELS	RESPONSIBILITY FOR TESTS	LOCATION OF TESTS
Selected portions of OT&E	Site Personnel	ATC HCS Facility

4.5 Test Facilities

The CPDLC-IA Service software testing will take place at the locations indicated in Tables 4-1, 4-2, and 4-3.

4.6 Test Responsibilities

Responsibility for developing test plans and procedures, conducting tests, evaluating results, and reporting test results is distributed by the program manager among the developer, WJHTC Test and Evaluation organizations, and installation and operational personnel at the ATC facility. Responsibility for tests will be as shown in Tables 4-1, 4-2, and 4-3.

4.7 Verification Methods

A number of different verification methods will be used across the four test levels described above. These verification methods are test, demonstration, analysis, and inspection.

4.7.1 Test

Test is a method of verification wherein performance is measured during or after the controlled application of functional and/or environmental stimuli. Quantitative measurements are analyzed to determine the degree of compliance. The process includes the use of instrumentation or other special test equipment to collect data for later analysis.

4.7.2 Demonstration

Demonstration is a method of verification where qualitative determination of properties is made for an end-item, including software and/or the use of technical data and documentation. The items verified are observed, but not quantitatively measured, in a dynamic state.

4.7.3 Analysis

Analysis is a method of verification which consists of comparing hardware or software design with known scientific and technical principles, data obtained from other qualification methods, and procedures and practices to estimate the capability of the proposed design to meet the mission and system requirements.

4.7.4 Inspection

Inspection is a method of verification to determine compliance without the use of special laboratory appliances, procedures or services, and consists of a nondestructive static-state examination of the hardware, software, technical data, and documentation.

4.8 Test Constraints

Formal test constraints on the CPDLC-IA Service software are as follows:

a. The operational software will be tested in an operational mode, which includes the full capability of the operational En Route Computer System. Both live and simulated input data may be used, at the discretion of the Government.

b. Government-approved databases will be used for testing.

c. All tests, data collection, and analysis will be monitored and reviewed at the discretion of the Government.

d. Data collection will be performed using government-approved data collection and analysis tools and techniques.

e. The government will determine the degree to which the CPDLC-IA Service software has met the functional specification stated herein.

4.9 Qualification Cross Reference Table

Each requirement in Section 3 will be correlated with the verification method and test level specified above. The correlation will take the form of a qualification cross-reference table as illustrated in Table 4-4. These verification requirements will be mandatory for use in all testing of the CPDLC-IA Service software. Where applicable, pass/fail criteria for each verified requirement will be defined and placed in appropriate documentation. Failure to pass the appropriate method (test, demonstration, analysis, and inspection) will be cause for rejection. Upon evaluation of the cause of the failure and the implementation of proper corrective measures, the verification in which the failure occurred will be repeated. If the

corrective action has affected prior verification, or if a computer program has been changed, or if any hardware has been changed, then the prior verification will be repeated.

Table 4-4. Example of the CPDLC-IA Service Qualification Cross Reference Table

SECTION 3 REFERENCE	REQUIREMENTS STATEMENT	VERIFICATION LEVEL AND METHOD			REMARKS
Par. No.	**Requirement**	**Subsystem Level**	**Integration Level**	**Site Level**	

VERIFICATION METHODS:

T = Test, D = Demonstration, A = Analysis, I = Inspection,

L = Verified By Lower Level Requirement, X = Not Required/Not Applicable

Section 5

Preparation for Delivery

The CPDLC-IA Service software integration will be performed in accordance with the established requirements for compatibility with existing En Route Computer System update schedules.

Section 6

Notes

6.1 CPDLC-IA Block Diagram

The following figure presents a high-level block diagram of subsystems that play a role in the provision of CPDLC-IA functions. The controller sends and receives data link messages through the Display System Replacement (DSR), which interfaces with the Host Computer System (HCS). The Host Interface Device (HID) handles the communications between the HCS and NAS Local Area Network (LAN). The Data Link Application Processor (DLAP) processes uplink and downlink messages and performs a variety of CPDLC-IA software tasks (e.g., monitoring and control, maintenance, support, etc.). The NAS LAN router serves as the interface between the NAS LAN and the National Airspace Data Interchange Network II (NADIN II), which sends and receives data to the service provider and adjacent ARTCCs. Air-ground communication services are provided by the VDL-2 service provider.

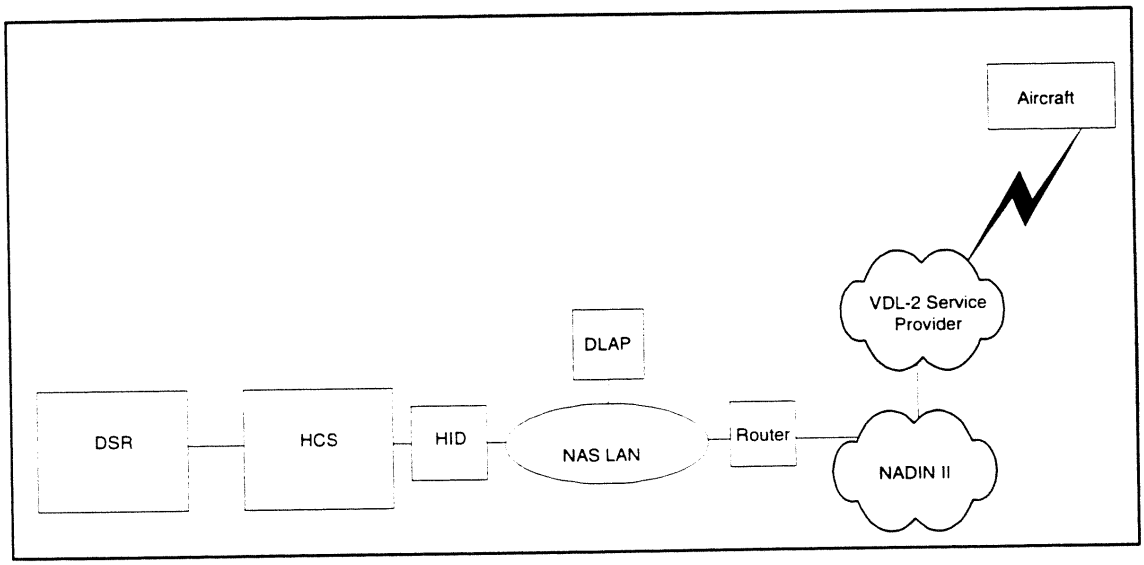

Figure 6-1. CPDLC-IA Block Diagram

6.2 CPDLC-IA Preliminary Transfer Delay Time Budgets

Preliminary response time budgets have been derived from various performance specifications and preliminary requirements. Figures 6-2 and 6-3 are provided for illustration purposes only. The figures are intended to put in context the required mean and 95th percentile end-to-end transfer delays. They are not intended to be referenced when allocating performance requirements to the various components of the overall system.

Performance information from the sources listed below was used to estimate the transfer delay of each segment. A mixture of 90th, 95th, and 99th percentile measures were combined to estimate the 95th percentile delay estimates.

- DSR: Mean and 99th percentile (reference A093 Requirements).
- En Route Computer System (ECS): Mean and 90th percentile (reference NAS-MD-318); ECS defined here to include HCS, HID, NAS LAN, and DLAP.
- NADIN II: Mean and 90th percentile (reference FAA-E-2770d); actual NADIN II performance has proven better than specification.
- VDL-2 Service Provider: Preliminary mean and 95th percentile FAA requirements.
- AVIONICS: Estimated.

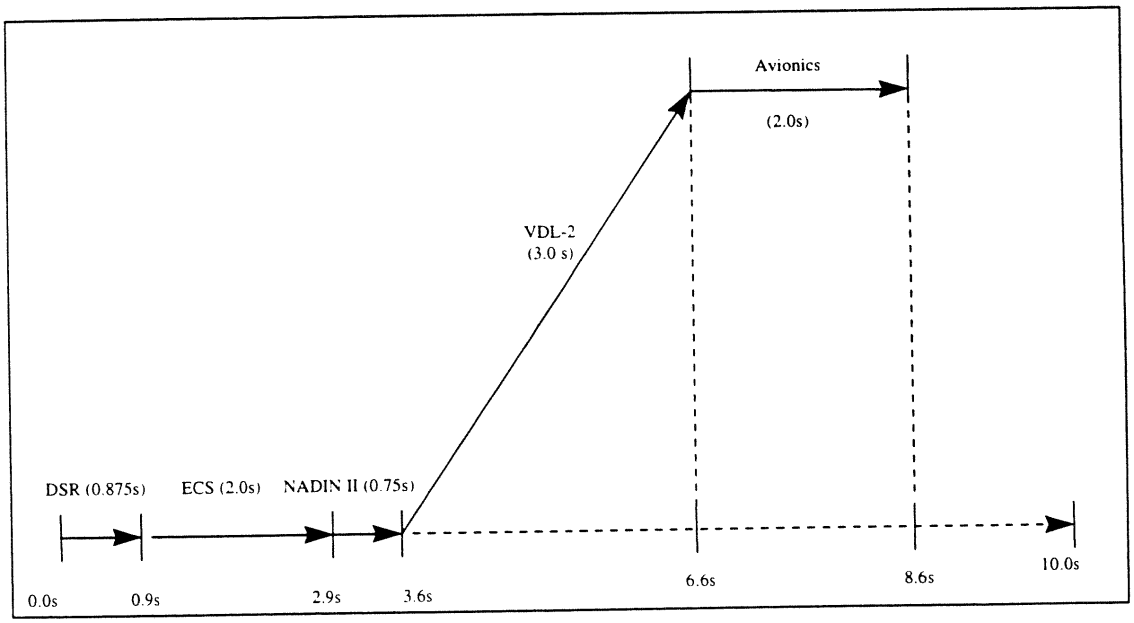

Figure 6-2. CPDLC-IA Mean Transfer Delay Time Budgets

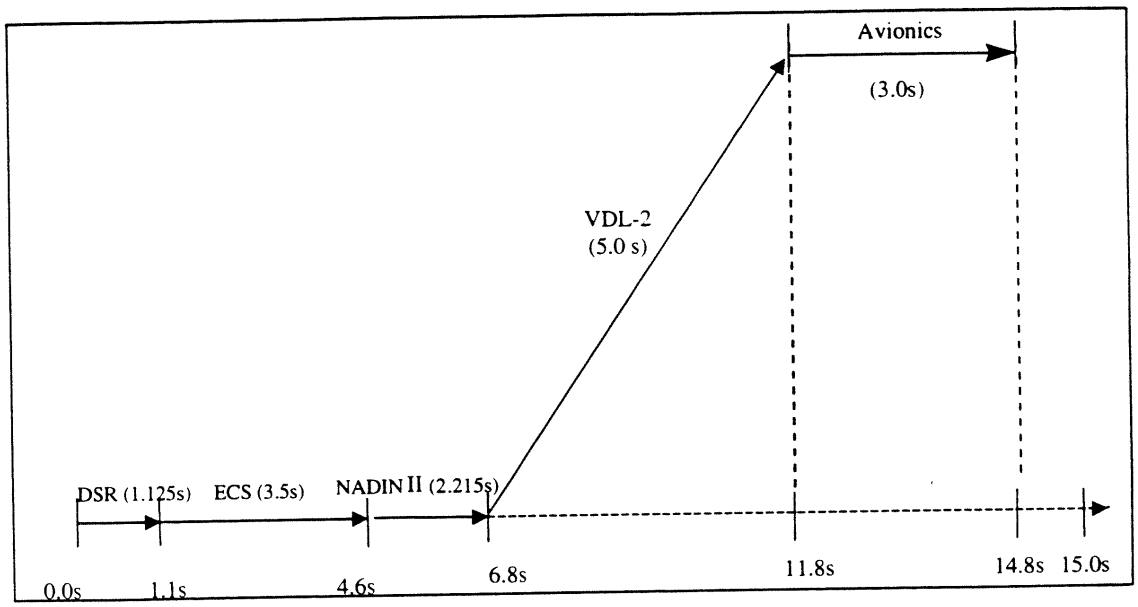

Figure 6-3. CPDLC-IA 95th Percentile Transfer Delay Time Budgets

6.3 Definitions

Application Status Error: An indication to the controller that a hardware or software error occurred when attempting to uplink a message.

Commanded Termination: Session termination invoked by the CPDLC-air-user or the CPDLC-ground-user (see the ATN SARPs, Section 2.3.3).

Current Data Authority: The ground authority permitted to conduct a CPDLC dialogue with an aircraft.

Data Link Eligibility: The ability of a controller or a pilot to send and receive data link messages.

Data Link Eligibility Symbol: A symbol presented on a controller display to indicate that a specific aircraft has data link eligibility.

Data Link Session Symbol: A symbol indicating that a specific aircraft has a Data Link Session.

Dialogue: A cooperative relationship between elements, which enables communications and joint operation.

Flight Plan: Specified information relative to an intended flight or portion of a flight for an aircraft.

Local Processing Error: An unintended software or hardware error in a component of the CPDLC system that prevents the completion of an intended function.

Menu Text List: A list presented on the controller display that contains predefined messages for optional selection by the controller.

Message Element: A component of a message, as defined in the ATN SARPs, used to define the context of the information exchanged.

Message Element Identifier: All uplink and downlink message components are identified as uM*id* and dM*id* (e.g., uM117 and dM38), where *id* denotes the message element identifier as defined in the ATN SARPs.

NEXCOM: A future air-ground communication system under development by the FAA.

Next Data Authority: The ground system that provides for the establishment and maintenance of a transport connection for the purposes of conducting a CPDLC dialogue pertaining to the services of the receiving Air Traffic Services unit.

Non-positive Status Value: Any of the following status values (see Section 3.2.3.1.1): Application Error, Communications System Failure, Unable, and Negative.

Pilot-Initiated Downlink List: A list presented on the controller display that contains pilot-initiated downlink messages.

Referent: A string of characters that identify a menu text entry.

Response Time: Time elapsed from an input to the CPDLC system until output from the CPDLC system.

Sector Settings List: A list presented on the controller display that contains CPDLC-IA parameters (e.g., TOC mode).

Service Type: A characterization of a specific CPDLC-IA Service (e.g., TOC, AA).

Session: Same as *dialogue* (see above).

Significant Event: An event that warrants notification to the SMMC position (e.g., a system error).

Simulated Pilot Position: An ARTCC position used to simulate CPDLC-IA functions from the cockpit perspective for training and testing purposes.

Status List: A list presented on the controller display that contains the status of each CPDLC-IA uplinked message.

Supervisory Capability: A CPDLC-IA function that can be invoked by an ARTCC supervisor (e.g., initiation and termination of CPDLC-IA Service).

System Error: An unintended software or hardware error that prevents the completion of an intended function.

Throughput Efficiency: Number of messages successfully receiving communication acknowledgment divided by the number of messages output.

Time-Out: A specific time period allocated to a function.

Very High Frequency (VHF) Data Link (VDL): Packet data communication to aircraft and ground users comprised of airborne VHF data radios, VHF ground stations, and connectivity to routers on the aircraft and the ground.

VDL-2: A future implementation of VDL.

Appendix A

Controller–Pilot Data Link Communications, Build IA (CPDLC-IA)

A.1 Uplink Messages

The uplink messages for CPDLC-IA are presented in this section. For a description of message attributes (i.e., URG, ALRT, RESP), refer to the ATN SARPs section 2.3.7.

Table A-1. Responses/Acknowledgments (Uplink)

	Message Intent/Use	Message Element	URG	ALRT	RESP
0	Indicates that ATC cannot comply with the request.	UNABLE	N	M	N
1	Indicates that ATC has received the message and will respond.	STANDBY	N	L	N
3	Indicates that ATC has received and understood the message.	ROGER	N	L	N

Table A-2. Vertical Clearances (Uplink)

	Message Intent/Use	Message Element	URG	ALRT	RESP
19	Instruction to maintain the specified level.	MAINTAIN *(level)*	N	M	W/U
20	Instruction that a climb to a specified level is to commence and once reached the specified level is to be maintained.	CLIMB TO *(level)*	N	M	W/U
23	Instruction that a descent to a specified level is to commence and once reached the specified level is to be maintained.	DESCEND TO *(level)*	N	M	W/U

Note: Wherever the variable (level) is specified. the message can specify either a single level or a vertical range, i.e., block level.

Table A-3. Route Modifications (Uplink)

	Message Intent/Use	Message Element	URG	ALRT	RESP
74	Instruction to proceed directly from the present position to the specified position.	PROCEED DIRECT TO *(position)*	N	M	W/U
80	Instruction to proceed via the specified route.	CLEARED *(route clearance)*	N	M	W/U
190	Instruction to fly on the specified heading.	FLY HEADING (degrees)	N	M	W/U

Table A-4. Speed Changes (Uplink)

	Message Intent/Use	Message Element	URG	ALRT	RESP
106	Instruction that the specified speed is to be maintained.	MAINTAIN *(speed)*	N	M	W/U
108	Instruction that the specified speed or a greater speed is to be maintained.	MAINTAIN *(speed)* OR GREATER	N	M	W/U
109	Instruction that the specified speed or a lesser speed is to be maintained.	MAINTAIN *(speed)* OR LESS	N	M	W/U

Table A-5. Contact/Monitor/Surveillance Requests (Uplink)

	Message Intent/Use	Message Element	URG	ALRT	RESP
117	Instruction that the ATS unit with the specified ATS unit name is to be contacted on the specified frequency.	CONTACT *(unit name)* *(frequency)*	N	M	W/U
120	Instruction that the ATS unit with the specified ATS unit name is to	MONITOR *(unit name)* *(frequency)*	N	M	W/U

	Message Intent/Use	Message Element	URG	ALRT	RESP
	be monitored on the specified frequency.				

Table A-6. Report/Confirmation Requests (Uplink)

	Message Intent/Use	Message Element	URG	ALRT	RESP
135	Instruction to confirm and acknowledge the currently assigned level.	CONFIRM ASSIGNED LEVEL	N	L	Y
231	Instruction to indicate the pilot's preferred level.	STATE PREFERRED LEVEL	L	L	Y

Table A-7. Air Traffic Advisories (Uplink)

	Message Intent/Use	Message Element	URG	ALRT	RESP
213	ATS advisory that the specified altimeter setting relates to the specified facility.	*(facility designation)* ALTIMETER *(altimeter)*	N	L	R
157	Notification that a continuous transmission is detected on the specified frequency. Check the microphone button.	CHECK STUCK MICROPHONE *(frequency)*	U	M	N

Table A-8. System Management Messages (Uplink)

	Message Intent/Use	Message Element	URG	ALRT	RESP
159	A system generated message notifying that the ground system has detected an error.	ERROR *(error information)*	U	M	N
160	Notification to the avionics that the specified data authority is the Next Data Authority. If no data authority is specified, this indicates that any previously specified Next Data Authority is no longer valid.	NEXT DATA AUTHORITY *(facility)*	L	N	N
162	Notification that the ground system does not support this message.	SERVICE UNAVAILABLE	L	L	N
227	Confirmation to the aircraft system that the ground system has received the message to which the logical acknowledgment refers and found it acceptable for display to the responsible person.	LOGICAL ACKNOWLEDGMENT	N	M	N
233	Notification to the pilot that messages sent requiring a logical acknowledgment will not be accepted by this ground system.	USE OF LOGICAL ACKNOWLEDGMENT PROHIBITED	N	M	N

Table A-9. Additional Messages (Uplink)

	Message Intent/Use	Message Element	URG	ALRT	RESP
165	Used to link two messages, indicating the proper order of execution of clearances/instructions.	THEN	L	N	N
183		*(free text)*	N	M	N
196		*(free text)*	N	M	W/U
203		*(free text)*	N	M	R
205		*(free text)*	N	M	A/N

Note: Free text message elements have no associated message intent. The capability to send a free text message with any of the attribute combinations already used in the message set have been provided for in the technical requirements of the ATN (Annex 10, Volume III, Part I, Chapter 3).

A.2 Downlink Messages

The Downlink messages for CPDLC-IA are presented in this section.

Table A-10. Responses (Downlink)

	Message Intent/Use	Message Element	URG	ALRT	RESP
0	The instruction is understood and will be complied with.	WILCO	N	M	N
1	The instruction cannot be complied with.	UNABLE	N	M	N
2	Wait for a reply.	STANDBY	N	M	N
3	Message received and understood.	ROGER	N	M	N
4	Positive pilot response.	AFFIRM	N	M	N
5	Negative pilot response.	NEGATIVE	N	M	N

Table A-11. Vertical Requests (Downlink)

	Message Intent/Use	Message Element	URG	ALRT	RESP
6	Request to fly at the specified level.	REQUEST *(level)*	N	L	Y

Table A-12. Reports (Downlink)

	Message Intent/Use	Message Element	URG	ALRT	RESP
38	Read-back of the assigned level.	ASSIGNED LEVEL *(level)*	N	M	N
106	Notification of the preferred level.	PREFERRED LEVEL *(level)*	L	L	N

Table A-13. System Management Messages (Downlink)

	Message Intent/Use	Message Element	URG	ALRT	RESP
62	A system generated message that the avionics has detected an error.	ERROR *(error information)*	U	L	N
63	A system generated denial to any CPDLC message sent from a ground facility that is not the current data authority.	NOT CURRENT DATA AUTHORITY	L	L	N
99	A system generated message to inform a ground facility that it is now the current data authority.	CURRENT DATA AUTHORITY	L	L	N
107	A system generated message sent to a ground system that tries to connect to an aircraft when a current data authority has not designated the ground system as the NDA.	NOT AUTHORIZED NEXT DATA AUTHORITY	L	L	N
100	Confirmation to the ground system that the aircraft system has received the message to which the logical acknowledgment refers and found it acceptable for display to the responsible person.	LOGICAL ACKNOWLEDGMENT	N	M	N

Appendix B

Acronyms

AA	Altitude Assignment
AID	Aircraft ID
ARINC	Aeronautical Radio Inc.
ARTCC	Air Route Traffic Control Center
AS	Altimeter Setting
ASM	Altimeter Setting Message
ATC	Air Traffic Control
ATS	Air Traffic Services
ATSU	Air Traffic Service Unit
ATN	Aeronautical Telecommunication Network
CAA	Civil Aviation Authority
CHI	Computer Human Interface
CMA	Context Management Application
COTS	Commercial Off-the-Shelf
CPDLC-I	Controller-Pilot Data Link Communications, Build I
CPDLC-IA	Controller-Pilot Data Link Communications, Build IA
CPDLC	Controller-Pilot Data Link Communications
CSC	Computer Software Component
CSCI	Computer Software Configuration Item
CSD	Controller Situation Display
CSU	Computer Software Unit
DLAP	Data Link Application Processor
DSR	Display System Replacement
DYSIM	Dynamic Simulator
FAA	Federal Aviation Administration
FDB	Full Data Block
FIR	Flight Information Region
FL	Flight Level
FLID	Flight Identification
FPA	Fix Posting Area
FSP	Flight Strip Printer

FT	Free Text
GFE	Government Furnished Equipment
GFI	Government Furnished Information
HCS	Host Computer System
HD	Heading Assignment
HID	HOST Interface device
IC	Initial Contact
ICAO	International Civil Aviation Organization
ICD	Interface Control Document
IRD	Interface Requirements Document
ISO	International Organization for Standardization
LAN	Local Area Network
LACK	Logical Acknowledgment
MT	Menu Text
MTBF	Mean Time Between Failures
NADIN	National Airspace Data Interchange Network
PSN	Packet Switch Network
NAS	National Airspace System
NDA	Next Data Authority
NEXCOM	Next-Generation Air/Ground Communications
NSM	Network Systems Manager
OSI	Open Systems Interconnection
OT&E	Operational Test and Evaluation
PD	Pilot-Initiated Downlink
POSIX	Portable Operating System Interface
PVD	Plan View Display
RC	Route Clearance
RDP	Radar Data Processing
RPR	Requirements Problem Report
RSB	Radar Sort Box

SAR	System Analysis Recording
SARPs	Standards and Recommended Practices
SDP	Software Development Plan
SMMC	System Maintenance Monitoring Console
SP	Speed Assignment
SIT	System Interface Test
ST&E	Shakedown Test and Evaluation
SU	Status Update
TOC	Transfer of Communication
TRACON	Terminal Radar Approach Control
VDL	VHF Data Link
VHF	Very High Frequency
WJHTC	William J. Hughes Technical Center
Y2K	Year 2000