ORDER

6100.1E

MAINTENANCE OF NAS EN ROUTE STAGE A – AIR TRAFFIC CONTROL SYSTEM

September 2, 1999

U.S. DEPARTMENT OF TRANSPORTATION
FEDERAL AVIATION ADMINISTRATION

Distribution: Selected Airway Facilities Field and Regional Offices; ZAF−606 Initiated By: AOS−300

RECORD OF CHANGES

DIRECTIVE NO. 6100.1E

CHANGE TO BASIC	SUPPLEMENTS			OPTIONAL	CHANGE TO BASIC	SUPPLEMENTS			OPTIONAL

FOREWORD

1. PURPOSE.

This handbook provides guidance and prescribes technical standards and tolerances, and procedures applicable to the maintenance and inspection of the National Airspace System (NAS) En Route Air Traffic Control System. It also provides information on special methods and techniques that will enable maintenance personnel to achieve optimum performance from the equipment. This information augments information available in instruction books and other handbooks, and complements the latest edition of Order 6000.15, General Maintenance Handbook for Airway Facilities.

2. DISTRIBUTION.

This Order is distributed to selected offices and services within Washington headquarters, regional Airway Facilities divisions, William J. Hughes Technical Center, Mike Monroney Aeronautical Center, and Airway Facilities field offices responsible for the maintenance of NAS En Route Air Traffic Control Systems and Flight Data Entry and Printout (FDEP) and/or Flight Data Input Output (FDIO) equipment.

3. CANCELLATION.

This order cancels Order 6100.1D, NAS En Route Stage A–Air Traffic Control System.

4. MAJOR CHANGES.

a. Configuration Control Decision (CCD) N18581, Add Display System Replacement (DSR) System.

b. CCD N20030, Update Selected NAS–Level Maintenance, Certification, and Multiprogramming Diagnostic Monitor (MDM) Baseline Documents Applicable to the En Route Coded Time Source (CTS).

c. CCD N19754, Add Host Interface Device (HID)/NAS Local Area Network (LAN).

d. CCD N20656, Replacement of HOST Computer System Hardware Phase 1.

5. MAINTENANCE AND MODIFICATION POLICY.

a. Order 6000.15, this handbook, and the applicable equipment instruction books shall be consulted and used together by the maintenance technician in all duties and activities for the maintenance of NAS En Route Air Traffic Control Systems. These documents shall be considered collectively as the single official source of maintenance policy and direction authorized by Operational Support. References located in the chapters of this handbook entitled Standards and Tolerances, Periodic Maintenance, and Maintenance Procedures shall indicate to the user whether this handbook and/or the equipment instruction book shall be consulted for a particular standard, key inspection element or performance parameter, performance check, maintenance task, or maintenance procedure.

b. The latest edition of Order 6032.1, Modifications to Ground Facilities, Systems, and Equipment in the National Airspace System, contains comprehensive policy and direction concerning the development, authorization, implementation, and recording of modifications to facilities, systems, and equipment in commissioned status. It supersedes all instructions published in earlier editions of maintenance technical handbooks and related directives.

c. Modifications to equipment that is baselined under configuration management shall be in accordance with the latest edition of Order 1800.8, National Airspace System Configuration Management.

6. RECOMMENDATIONS FOR CHANGES.

This handbook is under configuration management control as defined in Order 1800.8, and NAS Configuration Management Document NAS MD–001. Any changes to the baseline document or requests for deviation from national standards shall be processed through the NAS Change Proposal (NCP) process. Copies of FAA Form 1800–2, NAS Change Proposal are provided in the back of this handbook for the convenience of handbook users.

7. FILING INSTRUCTIONS.

Technical equipment instruction books, associated drawings, and maintenance program documentation should be properly filed and readily available to maintenance personnel. Books and drawings shall be revised or updated as necessary to reflect equipment modifications accomplishment.

8. EFFECTIVE DATE.

The effective date of this directive is the date of receipt.

Raymond M. Long
Program Director for Operational Support

TABLE OF CONTENTS

Paragraph *Page*

Chapter 1. GENERAL INFORMATION AND REQUIREMENTS

1. Objective. 1
2. Distribution 1
3. Coordination 1
4. Periodic Maintenance 1
5. Certification Requirements 1
6. Special Handling of Radar Site Coverage Analysis Program Materials . . 2
7. Stationary Test Pattern Damage to Plan View Display Cathode Ray Tubes 2
8. Use of Spare Peripheral Adapter Modules Adapters 2
9. Automation Service Reporting Terminology 2
10. Accident/Incident Procedures 3
11. References 3
12.–50. Reserved 3

Chapter 2. TECHNICAL CHARACTERISTICS

51. General 5
52. NAS En Route Stage A Model 4 5
53. Radar Data Acquisition and Transfer Subsystem 8
54. Central Computer Complex Host Subsystem 11
55. Computer Program Subsystem 23
56. Computer Update Equipment for CDC, DCC, or DCCR Sites 28
57. Radar Display Subsystem Hardware for CDC, DCC, or DCCR Sites 32
58. Radar Display Subsystem Software for CDC, DCC, or DCCR Sites 39
59. Communications Subsystems 46
60. System Maintenance and Monitoring 46
61. Direct Access Radar Channel Subsystem 51
62. Direct Access Radar Channel Software 57
63. Flight Data Input Output 58
64. Display System Replacement (DSR) Subsystem Local Area Network Architecture. 60
65. Display System Replacement (DSR) Subsystem Hardware (DSR Sites) 60
66. HNL System Configuration. 66
67.–69. Reserved. 66

Chapter 3. STANDARDS AND TOLERANCES

70. General. 69

TABLE OF CONTENTS (Continued)

Paragraph *Page*

Section 1. COMPOSITE FLIGHT DATA PROCESSING (CFAD) SERVICE

71. FDP Automation Service 70

Section 2. COMPOSITE RADAR DATA PROCESSING (CRAD) SERVICE

72. RDP Automation Service 71

Section 3. RESERVED

73. Reserved 76

Section 4. AIR TRAFFIC CONTROL COMPUTER (ATCC) SYSTEM

74. Air Traffic Control Computer (ATCC) System 77

Section 5. CENTRAL COMPUTER COMPLEX HOST (CCCH) SYSTEM

75. Central Computer Complex Host (CCCH) System 83

Section 6. RADAR DATA ENTRY AND DISPLAY (RDED) SUBSYSTEM (CDC–SITE DEPENDENT)

76. Radar Data Entry and Display (RDED) Subsystem (CDC) 86

Section 7. COMPUTER DISPLAY CHANNEL (CDC) SYSTEM

77. Computer Display Channel (CDC) System 87

Section 8. RADAR DATA ENTRY AND DISPLAY (RDED) SUBSYSTEM (DCC)

78. Radar Data Entry and Display (RDED) Subsystem (DCC) 110

Section 9. DISPLAY CHANNEL COMPLEX (DCC) SYSTEM

79. Display Channel Complex (DCC) System 111

Section 10. RESERVED

80. Reserved 126

Section 11. DARC RADAR DATA PROCESSING (DRAD) SERVICE

81. DRAD Service 127

TABLE OF CONTENTS (Continued)

Paragraph *Page*

Section 12. DIRECT ACCESS RADAR CHANNEL (DARC) SYSTEM

82. Direct Access Radar Channel (DARC) System 129

Section 13. RADAR DATA ENTRY AND DISPLAY (RDED) SUBSYSTEM (DCCR)

83. Radar Data Entry and Display (RDED) Subsystem (DCCR) 139

Section 14. DISPLAY CHANNEL COMPLEX REHOST (DCCR) SYSTEM

84. Display Channel Complex Rehost (DCCR) System 140

Section 15. RADAR DATA ENTRY AND DISPLAY (RDED) SUBSYSTEM DISPLAY SYSTEM REPLACEMENT (DSR)

85. Radar Data Entry and Display (RDED) Subsystem (DSR) 145

Section 16. DISPLAY SYSTEM REPLACEMENT (DSR) SYSTEM

86. Display System Replacement (DSR) System 146
87.–99. Reserved 149

Chapter 4. PERIODIC MAINTENANCE

100. General 151

Section 1. PERFORMANCE CHECKS

Subsection 1. CCCH SYSTEM PERFORMANCE CHECKS

101.–118. Reserved 152
119. Host Interface Device (HID) 152
120. DSR Printer Control Unit 153
121. CCCH System 153
122. 3420 Magnetic Tape Unit 153
123. Reserved 153
124. 4248 Printer Equipment 153
125. 3268 Console Printer 154
126. 3480 Cartridge Tape Control Unit 154
127. 3725 Communication Controller 154
128. 3480 Cartridge Tape Unit 154
129. Adapter Unit (AU) 154

Subsection 2. AIR TRAFFIC CONTROL COMPUTER SYSTEM PERFORMANCE CHECKS

130. Interfacility Data Communication 155
131. Coded Time Source (CTS) 155
132. Flight Strip Printer (FSP) 155

TABLE OF CONTENTS (Continued)

Paragraph *Page*

133. Flight Data Input Output (FDIO) 155
134. Reserved 155

Subsection 3. RADAR DATA ACQUISITION SYSTEM PERFORMANCE CHECKS

135. Computer Update Equipment (CUE) 156
136. Reserved 156
137. Non–Radar Keyboard Multiplexer (NRKM) 156
138. Computer Update Equipment Test Cart 156
139.–145. Reserved 156
146. Radar Data Analysis 157
147.–149. Reserved 157

Subsection 4. COMPUTER DISPLAY CHANNEL PERFORMANCE CHECKS

150. Computer Display Channel (CDC) 158
151.–174. Reserved 159

Subsection 5. DARC SYSTEM PERFORMANCE CHECKS

175. System Status Control (SSC) 160
176. Control Processor 160
177. Display Processor (DP) 160
178. Radar Data Distribution Unit (RDDU) 160
179. DARC Status Panel at AMCC 161
180. Teleprinter (DEK and IOTs) 161
181. Reserved 161
182. Disk 161
183. Line Printer (LP) 161
184. Magnetic Tape Drive 161
185. Radar Data Distribution Unit (RDDU) 161
186.–199. Reserved 162

Subsection 6. DCC SYSTEM PERFORMANCE CHECKS

200. Display Channel Complex (DCC) (9020E System) 163
201. 7265 System Console and Configuration Console 164
202. 7201–02 Computer Element (CE) 164
203. 7231–02 Input/Output Control Element (IOCE) 164
204. 7251–09 Storage Element (SE) 165
205. 7289–04 Display Element (DE) 166
206. 2701 Data Adapter Unit 166
207. 2821 Interface Control Unit 166
208. 2401 Tape Drive 167
209. 1403 High–Speed Printer (HSP) 168
210. 2540 Card Reader/Punch (CRP) 168

TABLE OF CONTENTS (Continued)

Paragraph *Page*

211. Channel–to–Channel Adapter 168
212. 2314 Direct Access Storage Facility Control Unit 168
213. 2312 Disk Drive Units 168
214. Radar Keyboard Multiplexer (RKM) 169
215. Plan View Display (PVD) 169
216.–219. Reserved 169

Subsection 7. AMCC SYSTEM PERFORMANCE CHECKS

220. Reserved 170
221. Maintenance System Printer (MSP) 170

Subsection 8. DCCR SYSTEM PERFORMANCE CHECKS

222. Processor (9221–170) 171
223. Processor Console PS/2 Model 57 171
224. Establishment Controller 3174–21L 171
225. Multi-System Channel Communications Unit (MCCU) 171
226. Tape Control Unit (TCU) 172
227. Tape Drive (TD) 172
228. Replacement I/O Terminal (RIOT) 172
229. Display Controller (DC) 172
230.–249. Reserved 172

Subsection 9. DISPLAY SYSTEM REPLACEMENT PERFORMANCE CHECKS

250. Main Display Monitor 173
251. RISC System/6000 Processor, Common in the Following DSR Subsystems 173
252. LCN Bridge Processor PS/2 Model 55 SX 173

Section 2. OTHER MAINTENANCE TASKS

Subsection 1. CCCH OTHER MAINTENANCE TASKS

253.–266. Reserved 174
267. 9672–RA4 Processor 174
268. Hardware Management Console (HMC) and Support Element (SE) 174
269. 3083BX Processor Subsystem 174
270. 3814 Switching Management Subsystem 176
271. 3803/3420 Magnetic Tape Equipment 176
272. 3725 Communications Controller 178
273. 4248 Printer Equipment 178
274. DSR Printer Control Unit (DPCU) 179
275. Adapter Unit (AU) 179
276. Host Interface Device (HID). 179

TABLE OF CONTENTS (Continued)

Paragraph *Page*

277.–280. Reserved 179

Subsection 2. AIR TRAFFIC CONTROL COMPUTER (ATCC) SYSTEM OTHER MAINTENANCE TASKS

281. Flight Data Input Output (FDIO) 180
282. Reserved 181
283. Modem Splitter Unit (MSU) 181
284. Non–Radar Channel Keyboard Multiplexer (NRKM) 181
285. Reserved 182
286. Computer Update Test Cart 182
287. Computer Update Equipment (CUE) 183
288.–299. Reserved 184

Subsection 3. RESERVED

300.–324. Reserved 185

Subsection 4. CDC OTHER MAINTENANCE TASKS

325. Computer Entry Tester (CET) 186
326. Reserved 186
327. Display Control and Vector Generator (DCVG) Tester 186
328. Operation and Maintenance Support Station (OMSS) 186
329. Input/Output Control (IOC) 187
330. Plan View Display (PVD) Computer Readout Display 188
331. Refresh Memory Control (RMC) 188
332. Refresh Memory Input/Output Control (RMIOC) 189
333. Refresh Memory (RM) 190
334. Buffer Memory (BM) 190
335. Radar Keyboard Multiplexer (RKM) 191
336. High–Speed Filter (HSF) 191
337. Configuration Control Monitor (CCM) 192
338. Display Generator (DG) 193
339. Central Processor (CP) 193
340. Reserved 194
341. PVD 194
342. CDC System Timing 194
343.–399. Reserved 195

Subsection 5. DARC OTHER MAINTENANCE TASKS

400. System Status Control (SSC) 196
401. Control Processor 196
402. Display Processor (DP) 197
403. Reserved 197

TABLE OF CONTENTS (Continued)

Paragraph *Page*

404. Radar Data Distribution Unit (RDDU) 197
405. Line Printer 197
406. DEK and IOT 198
407. Reserved 198
408. Reserved 198
409. Printed Circuit Board (PCB) Tester 198
410. Magnetic Tape Unit 198
411. Radar Keyboard Multiplexer (RKM) 198
412. Display Generator (DG) 199
413.–449. Reserved 199

Subsection 6. DCC OTHER MAINTENANCE TASKS

450. 7265 System Console and Configuration Console 200
451. 7201–02 Compute Element (CE) 200
452. 7231–02 Input/Output Control Element (IOCE) 200
453. 7251–09 Storage Element 201

454. 7289–04 Display Element 201
455. 2701 Data Adapter Unit 201
456. 2821 Interface Control Unit 201
457. 2803 Tape Control Unit 202
458. 2401 Tape Drive 202
459. 1403 High–Speed Printer 203
460. 2540 Card Reader Punch 204
461. 2314 Direct Access Storage Facility 205
462. 2312 Direct Access Storage Facility Control Unit 205
463. Channel–to–Channel Adapter 206
464. Radar Keyboard Multiplexer (RKM) 206
465. Display Generator (DG) 207
466. Plan View Display (PVD) 207
467. Plan View Display (PVD) Computer Readout Display 208
468. Computer Entry Tester (CET) 208
469. Reserved 208
470. Display Control and Vector Generator (DCVG) Tester 208
471. Input/Output Typewriter (IOT) (1052) 209

Subsection 7. AMCC OTHER MAINTENANCE TASKS

472. Reserved 210
473. Maintenance Systems Printer 210

Subsection 8. DCCR OTHER MAINTENANCE TASKS

474. Procesor (9221–170) 211
475. Processor Console (PS/2 Model 57) 211

TABLE OF CONTENTS (Continued)

Paragraph *Page*

476. Display Controller (DC) 211
477. Plan View Display (PVD) 211
478. Plan View Display (PVD) Computer Readout Display 211

Subsection 9. DSR OTHER MAINTENANCE TASKS

479. IBM 3490 Magnetic Tape Subsystem, Common in the Following DSR Racks 213
480. SEMAPHORE ST–3013 Network Encryption Unit (NEU) 213
481. Main Display Monitor 213
482.–490. Reserved 213

Chapter 5. SYSTEM MAINTENANCE PROCEDURES

491. General 215
492. Remote Support Facility Operations for the 9672–RA4 Processor 215
493.–499. Reserved 215

Section 1. PERFORMANCE CHECK PROCEDURES

500. General 216
501. Performance Checking 219
502. Recertification Requirements Related to Operational Program Patches . 219
503. Reserved 219
504. Certification Following Restoration Actions 219
505. Certification Status of the CDC with the CCM Disabled 220
506. Online Certification (OLC) Data Requirements 221
507. CFAD/CRAD Service Level Certification Procedures 229
508. DRAD Service Level Certification Procedures 230
509. System/Subsystem Level Certification Procedures 231
510. Element Level Certification Procedures 234
511. RDP Display Channel Online Manual Performance Checks 234
512. Reserved 236
513. Reserved 236
514. RDAT System Performance Check 236
515. Reserved 236
516. Radar Systems Coverage Service Verification 236
517. Radar Data Processing System Range and Azimuth Accuracy Checking Procedures 237
518. CFAD/CRAD Automation Service Certification (NSCT Offline) 243
519. Online Certification Tape 244
520. Status of Other En Route Facilities 244
521. Reserved 244
522. RDP Range and Azimuth Accuracy Verification During Short Duration Primary Radar Shutdown 244

TABLE OF CONTENTS (Continued)

Paragraph *Page*

523. RDP Range and Azimuth Accuracy Verification Using Ground–Based Transponders 245
524. Display System Tracking Verification Procedures Manual Entry Method 247
525. NAS System Certification Tape (NSCT) 248
526. Quick Analysis of Radar Sites (QARS) Procedures 252
527. Manual Online Certification Procedures (Alternate to Simulation Programs) 253
528. NAS–Automated Radar Terminal System (ARTS) Registration 255
529.–539. Reserved 256

Section 2. OTHER MAINTENANCE TASK PROCEDURES

540.–569. Reserved 256

Section 3. SPECIAL MAINTENANCE TASK PROCEDURES

570.–599. Reserved 256

Chapter 6. FLIGHT INSPECTION

600. General 257
601. Narrowband Search/Beacon Flight Checks 257
602.–610. Reserved 257

APPENDIX 1. CERTIFICATION REQUIREMENTS

Section 1. COMPOSITE FLIGHT DATA PROCESSING (CFAD) SERVICE 2

Section 2. COMPOSITE RADAR DATA PROCESSING (CRAD) SERVICE 3

Section 3. RESERVED 4

Section 4. AIR TRAFFIC CONTROL COMPUTER (ATCC) SYSTEM 5

Section 5. CENTRAL COMPUTER COMPLEX HOST (CCCH) SYSTEM 7

Section 6. RADAR DATA ENTRY AND DISPLAY (RDED) SUBSYSTEM (CDC–SITE DEPENDENT) 9

Section 7. COMPUTER DISPLAY CHANNEL (CDC) SYSTEM 10

Section 8. RADAR DATA ENTRY AND DISPLAY (RDED) SUBSYSTEM (DCC–SITE DEPENDENT) 11

Section 9. DISPLAY CHANNEL COMPLEX (DCC) SYSTEM 12

TABLE OF CONTENTS (Continued)

Paragraph *Page*

Section 10. RESERVED 15

Section 11. DARC RADAR DATA PROCESSING (DRAD) SERVICE 16

Section 12. RADAR DATA ENTRY AND DISPLAY (RDED) BACKUP SYSTEM 17

Section 13. DIRECT ACCESS RADAR CHANNEL (DARC) SYSTEM 18

Section 14. RADAR DATA ENTRY AND DISPLAY (RDED) SUBSYSTEM (DCCR) 19

Section 15. DISPLAY CHANNEL COMPLEX REHOST (DCCR) SYSTEM 20

Section 16. DISPLAY SYSTEM REPLACEMENT (DSR) RADAR DATA ENTRY AND DISPLAY (RDED) SUBSYSTEM 22

Section 17. DISPLAY SYSTEM REPLACEMENT (DSR) SYSTEM 23

APPENDIX 2. GLOSSARY OF TERMS AND ABBREVIATIONS

APPENDIX 3. MAINTENANCE OPERATION MANUALS

LIST OF ILLUSTRATIONS

Figure		*Page*
2–1	NAS En Route State A Overall Block Diagram	6
2–2	Radar Data Acquisition and Transfer Subsystem (RDAT)	9/10
2–3	Central Computer Complex Host (CCCH) (CDC Sites)	13/14
2–4	CentralComputer Complex Host (CCCH) (DCC Sites)	15/16
2–5	Central Computer Complex Host (CCCH) (DCCR Sites)	17/18
2–6	Central Computer Complex Host (CCCH) (DSR Sites)	19/20
2–7	Radar Console	29
2–8	Arrival and Departure (A and D) Positions, Nonradar Console	30
2–9	CUE System Overall Block Diagram	31
2–10	CDC System Block Diagram	33/34
2–11	DCC System Block Diagram	37/38
2–12	AMCC Functional Block Diagram	48
2–13	DCCR System Block Diagram	49/50
2–14	Central Computer Complex Host (CCCH) (9672–RA4)	52
2–15	DARC System Block Diagram	53/54
2–16	FDIO System Functional Block Diagram	59
2–17	Display System Replacement Hardware Architecture	61/62
2–18	HNL System Configuration	67
5–1	Display Area 1	224
5–2	Display Area 2	225
5–3	Display Area 3	226
5–4	Display Area 4	227
5–5	Composite ARTCC Display	228

LIST OF TABLES

Table		*Page*
5–1	Approximate Slant/Range Error	241
5–2	Weather Display	251
5–3	Strobe Function	251

CHAPTER 1. GENERAL INFORMATION AND REQUIREMENTS

1. OBJECTIVE.

The objective of this directive is to provide the necessary guidance, to be used in conjunction with information available in instruction books and other directives, for the proper maintenance of the NAS En Route Air Traffic Control System. The previous edition, Order 6100.1D is canceled.

2. DISTRIBUTION.

This order is distributed to selected offices and services within Washington headquarters, regional Airway Facilities divisions, William J. Hughes Technical Center, Mike Monroney Aeronautical Center, and Airway Facilities field offices responsible for the maintenance of NAS En Route Air Traffic Control Systems and Flight Data Entry and Printout (FDEP) equipment.

3. COORDINATION.

a. Maintenance Activities. Maintenance activities on the NAS En Route Air Traffic Control System shall be closely coordinated at all times with Air Traffic (AT) operations personnel to preclude unanticipated interruption of service. Certified electronic technicians assigned to the facility where the NAS En Route Air Traffic Control System has been installed shall be responsible for maintaining the equipment in an operational condition within the tolerance specified in chapter 3 of this directive. Cognizant AT operations personnel shall be advised immediately of equipment failure, restoration to service, and whenever the established tolerances are exceeded or are expected to be exceeded. This is especially important where standby or spare equipment is not immediately available. In any case in which equipment operation may be adversely affected, sufficient advance notice shall be given to AT operations personnel, since air traffic control procedures are based on the assumption that all equipment is available. It is also expected that AT personnel will recognize the need for releasing equipment at the scheduled time for routine maintenance tasks and will offer cooperation in the furtherance of practices that assure continuous and reliable operation.

Coordination is also required with Automated Radar Terminal System (ARTS) facilities, in case of ARTCC radar interruptions or coverage changes that may interfere with the Center Radar ARTS Presentation (CENRAP) capability. The CENRAP is used at some facilities to route long range radar data to ARTS facilities, to be used as backup for short range radar facilities.

b. Delegation of Authority. The NAS operations manager (NOM) has the delegated authority to coordinate the proposed shutdown of en route navigational aids with adjacent Air Route Traffic Control Centers (ARTCCs), and flight service stations. Approval, or disapproval, will be the decision of the Air Traffic Area Manager.

4. PERIODIC MAINTENANCE.

Maintenance personnel shall follow the tasks and schedules provided in chapter 4, which include the minimum essential preventive maintenance activities and the frequency with which they shall be performed so as to meet the minimum performance standards for the NAS En Route Air Traffic Control Systems.

5. CERTIFICATION REQUIREMENTS.

a. References. Refer to the latest edition of Order 6000.15, General Maintenance Handbook for Airway Facilities for general guidance on the certification of systems, subsystems, and equipment. Refer to appendix 1 of this handbook for the specific requirements applicable to the certification of the En Route Air Traffic Control automation services, systems, and equipment; the associated certification parameters; references to the governing standards and tolerances/limit; the normal and maximum certification intervals; the identity of recommended personnel responsible for certification; the prescribed certification statement to be entered in the Facility Maintenance Log (FAA Form 6030−2); and other needed reference information.

b. Required Certification. Certification is required for the following services, systems, and equipment:

(1) Composite Flight Data Processing (CFAD) service.

(2) Composite Radar Data Processing (CRAD) service.

(3) Direct Access Radar Channel Radar Data (DRAD) service.

(4) Reserved.

(5) Air Traffic Control Computer (ATCC) system.

(6) Radar Data Entry and Display (RDED) system.

(7) Reserved.

(8) Central Computer Complex Host (CCCH) system equipment 3083BX, or 9672 RA4.

(9) Computer Display Channel (CDC), Display Channel Complex Rehost (DCCR), Display Channel Complex (DCC), or Display System Replacement (DSR) system equipment as installed.

(10) Direct Access Radar Channel (DARC) system equipment.

(11) Host Interface Device/National Airspace System Local Area Network (HID/NAS LAN) System.

6. SPECIAL HANDLING OF RADAR SITE COVERAGE ANALYSIS PROGRAM MATERIALS.

The range azimuth radar reinforced evaluator (RARRE), and the radar statistical coverage analysis (RSCAN) programs provide computer assistance for radar coverage analysis. The printouts and derived data relatable, directly or indirectly, to radar site coverage, shall receive special handling dependent upon the security classification involved. RARRE and RSCAN printouts and derived data used exclusively for FAA purposes, but originating from a joint-use radar site, shall remain in an unclassified status. However, the printouts and derived data will be protected from indiscriminate or unauthorized release in accordance with the provisions in the latest edition of Order 1600.15D, Control and Protection of "For Official Use Only" Information. If the RARRE or RSCAN programs are used to support joint United States Air Force (USAF)/FAA evaluation, the resulting printouts or data recordings will be assigned a security classification in accordance with the provisions of the most current version of the USAF 416L Security Classification Guide. Data recordings or printouts developed during the joint evaluation, will not be released outside of FAA without prior approval of Automated Operations System Division (AOP−300) (Co-chairmen of Joint Radar Planning Group (JRPG)) and office of Investigation and Security Division, ACO−300.

7. STATIONARY TEST PATTERN DAMAGE TO PLAN VIEW DISPLAY CATHODE RAY TUBES.

Test patterns are essential aids for proper maintenance of plan view displays (PVD) and similar center display devices. However, the technician should maintain a constant awareness of the brightness level use and the length of time repetitive test pattern is allowed to be displayed on the cathode-ray tubes (CRT) in order to preclude possible damage to the phosphor materials on the CRT face.

8. USE OF SPARE PERIPHERAL ADAPTER MODULES ADAPTERS.

a. Background. In some instances, spare peripheral adapter module (PAM) adapters have been used by facilities to implement a new service such as an additional flight strip printer position. As all NAS equipment is under configuration control, this practice can, without proper authorization by NAS Change Proposal (NCP) procedures, result in confusion and discontinuance of a nonconfiguration- controlled service when the spare PAM adapter is subsequently assigned to an authorized service. Spare PAM adapters are listed as an asset for a given facility and may be reserved by AUA−200 En Route Integrated Product Team for future projects.

b. Action. FAA regions should assure that all PAM adapters are installed and operated only for the service required by an authorized configuration control decision (CCD) or electronic equipment modification (EEM). If spare adapters are required for a specified service, an NCP for such use should be submitted in accordance with the latest edition of Order 1800.8, National Airspace System Configuration Management.

9. AUTOMATION SERVICE REPORTING TERMINOLOGY.

General. This paragraph conveys common definitions for use by Airway Facilities headquarters and field personnel in reporting facility performance. Computer service interruptions have not been uniformly reported, and local data has not consistently agreed with national performance reports. Different reports have sometimes used the same reporting term in different ways. Some facilities have reported

scheduled startovers or outages that others would have reported as unscheduled. Therefore to assure that all automation service interruptions are reported and that interruption data can be correlated, definitions in the latest edition of Order 6040.15, National Airspace Performance Reporting System (NAPRS), shall apply to all NAS en route automation system performance status reporting requirements.

10. ACCIDENT/INCIDENT PROCEDURES.

a. General. Basic aircraft accident/incident guidance on the required technical evaluations reports and other general procedures are contained in the latest edition of Order 8020.11, Aircraft Accident and Incident-Notification, Investigation, and Reporting.

b. Accident. When notice of an aircraft accident is received, the NOM shall:

(1) With the assistance of air traffic site personnel, determine if the performance of a facility, or facilities, may have been involved.

(2) If a facility, or facilities may be involved, immediately advise responsible sector manager and System Management Office (SMO).

(3) If an accident occurs while an aircraft is under the direct control of the ARTCC, request ARTCC Airway Facilities personnel to make the necessary checks to insure that ARTCC equipment is operating properly.

(4) Ensure that the proper entry/entries has/have been made in the Maintenance Log, FAA Form 6030−2.

(5) Record all pertinent information. This record will be filed for a minimum period of 90 days.

c. Incident. The NOM shall, upon recommendations of air traffic personnel, or when deemed advisable, initiate the actions specified in Order 8020.11.

11. REFERENCES.

a. The nature of this document requires reference to numerous publications. To avoid frequent revision for the purpose of changing references to the latest issue, personnel shall consider all references to refer to the most recent edition.

b. A listing of related publications useful to technical personnel may be found in appendix 1 of Order 6000.15.

c. A listing of documents useful to Computer Operations, Programmers, and other NAS system personnel may be found in the catalog of documentation maintained by the National Airspace System Documentation Facility.

12.−50. RESERVED.

CHAPTER 2. TECHNICAL CHARACTERISTICS

51. GENERAL.

In NAS Stage A (depicted in figure 2−1), new concepts are introduced into the air traffic control system. The objective is to provide a balanced system designed to cope with the predicted growth of aviation, while maintaining an improved level of safety and more efficient use of airspace.

a. This objective is attained by the following automated operational features within the system:

(1) Automatically and manually initiated computer program tracking.

(2) Bright display of alphanumeric and radar data.

(3) Entry and processing of flight plan information.

(4) Flight progress strip printing at the appropriate sector position.

(5) Provision for entering and receiving new and revised flight data (updates) at all operating positions.

(6) Intersector coordination through computer-generated alphanumeric displays both plan view and tabular.

(7) Interfacility coordination through the use of computer transmitted data.

(8) Computer generated displays of geographic and weather data.

(9) Automatic computer initiated handoff capability with provision for manual handoff interrupt.

b. The display of radar data in the ARTCC is a processed (digitized) display. All radar data is converted into digitized data at the radar site. The digital data is then transmitted as radar messages via land lines or microwave link to the modem splitter unit (MSU) at the ARTCC. These messages are then routed to the CCCH 3083BX or 9672−RA4 and to the DARC simultaneously. After the messages have been processed, the target information is presented in symbolic form to the radar controller on the PVD. The radar controller selects either the CCCH or DARC data to be presented on the situation display.

c. The normal flow of data is frequently via multiple paths. From this design concept, along with the modular concept, comes a new version of a backup system. In other words, the built-in redundancy provides ample support for normal operations, and will continue to provide a high degree of support in case of failure of data flow path or a particular equipment element.

52. NAS EN ROUTE STAGE A MODEL 4.

This chapter describes, in terms of hardware and computer program elements, those subsystems that comprise NAS En Route Stage A, Model 4. This model is characterized by the replacement of the IBM 9020A and 9020D with the IBM 3083BX computer. The 3083BX is being replaced by the IBM 9672RA4. The major equipment configuration of the model 4 system is shown in figure 2−1.

a. Characteristics of Model 4. The following are distinguishing characteristics of the equipment and operation of model 4:

(1) The 3083BX or 9672RA4 equipment is used as the CCCH.

(2) CDC, DCC, DCCR, or DSR equipment is used for the generation of displays at the radar controllers' positions. Automatic reconfiguration capability of display channel is provided by all except DSR.

(3) The DARC interfaces with the display generator unit (DGU) and/or the EDARC System Interface (ESI) to function as a backup to the prime radar channel, bypassing the CCCH, and the CDC, DCC, or DCCR, and generating radar target information for display on the PVD's and/or DSR consoles.

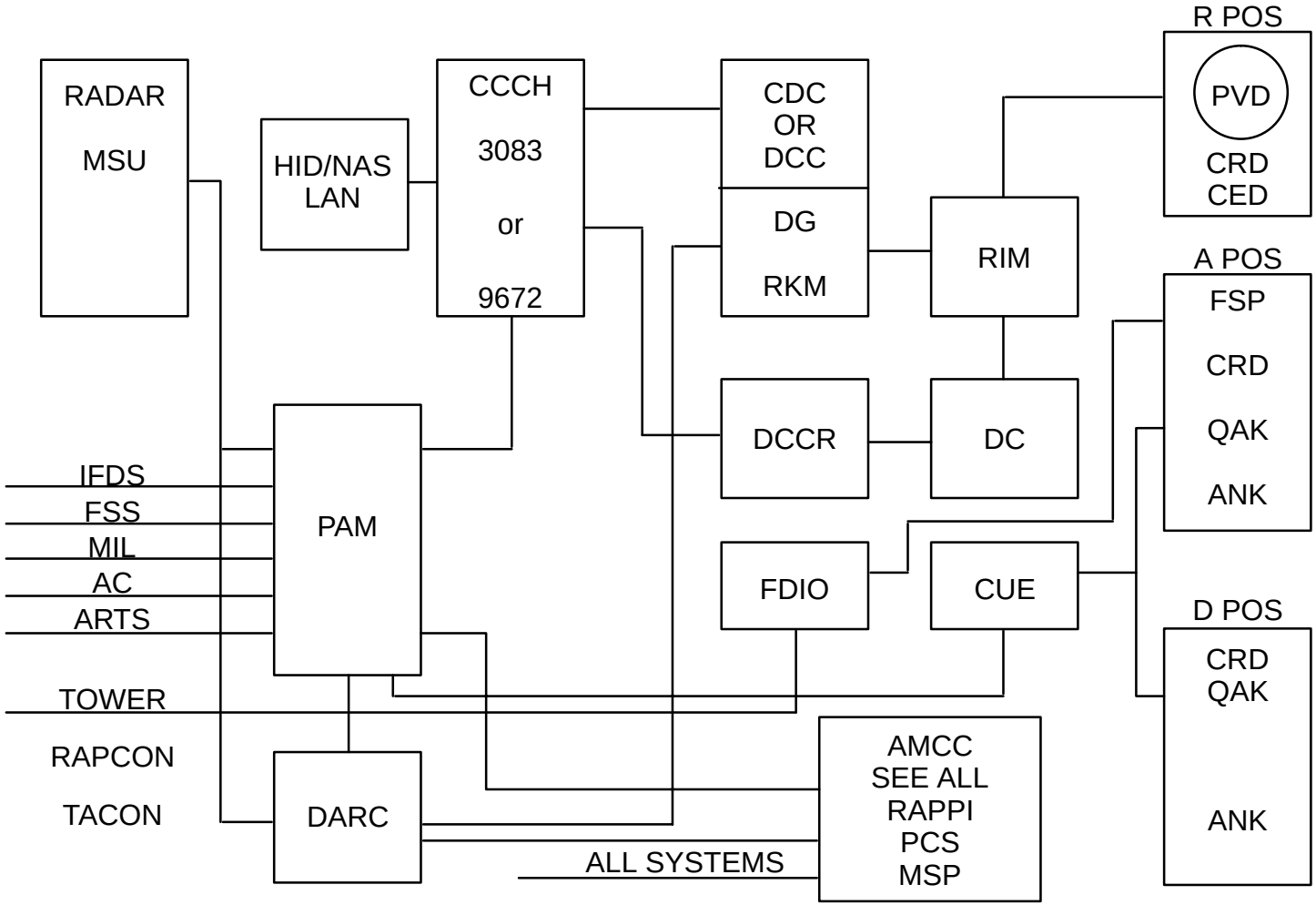

FIGURE 2–1. NAS EN ROUTE STAGE A OVERALL BLOCK DIAGRAM

(4) Interfacility data channels are provided for the transfer of track and flight data between adjacent ARTCCs and between ARTCCs and ARTS facilities.

(5) All radar sites feeding data to the radar data acquisition and transfer (RDAT) subsystem shall use a digitizer capable of transmitting data in FAA-standard format.

(6) Computer update equipment (CUE) is used at each position to provide man/machine interface for CDC, DCC, and DCCR sites.

(7) Automatic radar-handoff initiation is provided between sectors.

(8) Radar data may be recorded to allow the environment to be recreated.

b. System Functions. The following system functions are provided by NAS En Route Stage A, Model 4:

(1) Input.

(a) Route and accept flight data from operating positions, adjacent centers, automated radar terminal system (ARTS II and III) facilities and remote sources.

(b) Detect targets, digitize resulting analog signals, identify target type (aircraft weather, etc.), and transmit to computer and/or air defense sector as required.

(c) Accept digitized search/beacon radar data.

(d) Accept track data from computers in adjacent facilities.

(e) Route and accept test messages that are used to evaluate equipment and/or interface performance.

(f) Accept supervisory messages for adjusting the resources of the ARTCC, disposing of input/output problems, entering correction factors, etc.

(2) Output.

(a) Output flight progress strips at appropriate operating positions.

(b) Output messages to appropriate operating positions for display or printing.

(c) Output messages for printing at appropriate supervisory positions.

(d) Generate appropriate outputs in response to flight data information requests.

(e) Provide flight data outputs to adjacent facilities including ARTCCs, ARTS II and III facilities, approach control facilities, etc.

(f) Acknowledge input messages from all adapted sources except radar sites.

(g) Provide outputs which are to be used to adjust the resources of the ARTCC to the load.

(h) Display and selectively identify search/beacon data at appropriate operating positions.

(i) Provide digitized output messages meeting military selection criteria to Air Defense Center.

(j) Transmit track data to computers in adjacent facilities.

(k) Restore ARTS III data base by reloading all appropriate flight plans, when required.

(l) Reconstitute the display channel data base.

(3) Data Processing.

(a) Process and store flight data.

(b) Process and store digitized radar data.

(c) Maintain proper data exchange between control facilities.

(d) Periodically calculate the position and velocity of all tracks within the system.

(e) Provide control of the realtime operational program.

(f) Utilize adaptation information for general environment.

(g) Periodically calculate registration and collimation errors from all radar sites.

c. Subsystems. Presented below is a list of the subsystems comprising NAS En Route Stage A, Model 4, with a brief description of the purpose of each subsystem:

(1) Radar Data Acquisition and Transfer Subsystem. The RDAT subsystem provides separate

outputs to fulfill the requirements of both the NAS and air defense systems. This subsystem consists of search radars, beacon radars, common digitizers and data transmission and receiving equipment.

(2) Central Computer Complex Host Hardware. The CCCH is the central point for the collection, processing and distribution of data. It accepts and error-checks inputs; processes the inputs using stored programs and data base; formats and distributes outputs for printing or display locally or at remote locations.

(3) Central Computer Complex Host Software. The CCCH computer program subsystem is composed of all the instructions required to execute the ATC operational and system support functions.

(4) Computer Update Equipment. The CUE equipment transfers flight information to/from CCCH and the air traffic controller; and informs CCCH of errors and configuration changes, for CDC, DCC, and DCCR sites.

(5) Radar Display Channel. This subsystem at some ARTCC's consists of a **Display Channel Complex (IBM 9020E)** and at other ARTCC's it consists of a **Computer Display Channel (Raytheon 730)**, at others it consists of a **Display Channel Complex Rehost (IBM 9221−170)**. Each one performs the same functions; processes and displays flight data update messages at the radar controllers PVD; processes data generated by the radar controller through R-controls at the PVD; processes, stores, and transmits to CCCH and ARTCC Maintenance Control Center (AMCC) all detected data processing errors.

(6) Communications Subsystem. A digital communications capability is provided for transfer of flight data and/or track data between computers of adjacent facilities. These include ARTCC to adjacent ARTCC's and ARTCC to flight service stations (FSSs), airline offices, military operations, towers and approach control facilities.

(7) ARTCC Maintenance Control Center (AMCC). Overall system monitoring of the NAS equipment is provided by the AMCC located at a central location in the air traffic control (ATC) operating area. Data presented at this location are available to personnel for coordinated decisions or routine advisory actions. At this location personnel are alerted to equipment failure in the system and are provided with printed error and quality control analyses for subsystems. System reconfiguration for recovering from an equipment failure, for accommodating a change of workload, or for routing/resectoring is controlled and monitored at the AMCC by interphone or direct equipment monitoring.

(8) Direct Access Radar Channel Hardware. DARC is a backup system for the radar data processing (RDP) channel. The primary purpose is to provide En Route Air Traffic Controllers with a digital radar data processing and display function, normally carried out by the CDC/DCC/DCCR/DSR systems.

(9) DARC Software. The DARC subsystem software consists of all the instructions used by the DARC to execute the ATC operational and support functions.

53. RADAR DATA ACQUISITION AND TRANSFER SUBSYSTEM

a. General. The RDAT subsystem consists of certain equipment located at the radar sites and at the ARTCC (see figure 2−2). The principal equipment in this subsystem are the search (primary) radars, beacon (secondary) radars, digitizers, certain military equipment, modems, telco lines or microwave links, modem splitters and associated performance monitoring elements.

b. Search Radar. The search (Primary) radar inputs are provided by air route surveillance radar (ARSR), airport surveillance radar (ASR), and from a variety of military surveillance radars which are a part of the air defense systems.

c. Beacon Radar. The beacon (Secondary) radar inputs are from existing types of equipment used by the FAA and Department of Defense (DOD). This ground equipment includes mode C altitude interrogation and reply, and 4096 code mode 3/A reply. Certain military modes are provided to satisfy other DOD requirements.

d. Digitizer. The digitizer is a data processing system capable of receiving inputs from search and beacon equipment. Signals are quantized, and targets are detected by a variety of methods, dependent upon the digitizer type. Validated beacon targets are reinforced with detected search targets. Messages containing target data are then transmitted to FAA users, military users, or both.

e. Modems. See the latest edition of Order 6170.10, Maintenance of Data Multiplexing Network Equipment.

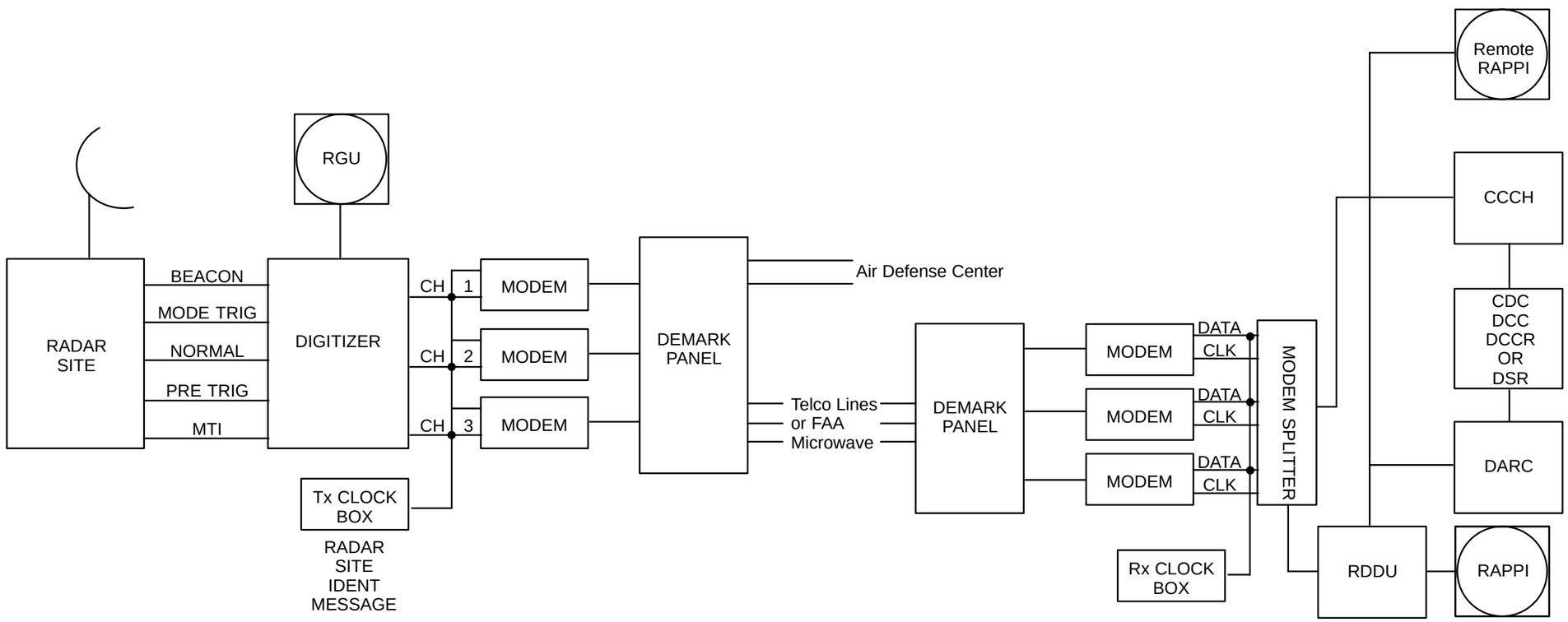

FIGURE 2–2. RADAR DATA ACQUISITION AND TRANSFER SUBSYSTEM (RDAT)

f. Modem Splitter Equipment. The modem splitter equipment located at the ARTCC accepts messages transmitted from the three output channels of the DTG at the radar site, via the radar remote data sets, and provides electrical conversion and fan-out of data to the different parts of the ARTCC computer complex. The modem splitters receive RS−232C data and clock signals and provide multiple, isolated, output ports in conformance with RS−232C and RS−485 standards. These outputs are routed to the CCCH, DARC, TRACS, Customs, and Inter-facility.

54. CENTRAL COMPUTER COMPLEX HOST SUBSYSTEM

a. Introduction.

(1) The CCCH is a 3083BX or 9672−RA4 in the NAS En Route Stage A System. This computer is a large scale, modular, data processing subsystem. The CCCH subsystem is controlled by the NAS monitor program, while NAS operations are handled by the operational and nonoperational computer program components. The relationship between the subsystem elements and system functions is as shown in figures 2−3, 2−4, 2−5, 2−6, and 2−14.

(2) In order to meet the demanding performance of the NAS environment, the CCCH incorporates design features that promote high reliability, allowing subsystem tailoring to the needs of different facilities, and includes providing for expansion. Primary to these ends is the modular design. In a modular design of this type, a failed element is automatically disassociated from the system while the remaining elements continue to function, and a redundant spare is brought into the operational system configuration.

b. The Central Computer Complex Host. The CCCH consists of two identical processors each of which have direct access to all elements including tape, disk, printer, PAMs, and the display channel equipment. The system configuration enables either processor to be selected as the primary processor with the other as the support processor. The primary processor will support the NAS operational software and meet the response time and workload requirements. The support processor will be available to process support and maintenance software, which includes data reduction and analysis, interactive data base maintenance, and hardware maintenance programs, in addition to running the NAS in standby mode. The Host computer complex consists of the following major elements:

- Two processor complexes (3083BX) or
- Two processors (9672−RA4)
- Two direct access storage subsystems
- Two switching management subsystems
- One communication subsystem
- Two high-speed printers
- Three magnetic tape storage subsystems
- Keyboard video display terminal (KVDT) and console printer subsystem.

(1) Processor Complexes 3083BX.

(a) Each processor complex consists of a 3089 Power Unit which provides 400 Hz power to a 3083 Processor, a 3082 Processor Controller, and a 3087 Coolant Distribution Unit.

(b) Each of the processor complexes provides:

1 A compute power of 7.32 million instructions per second (MIPS) expandable to 10.4 MIPs within the same processor family.

2 A capability of 16 megabytes of real memory, expandable to 32 megabytes.

3 A capability of 16 input/output (I/O) channels, expandable to at least 20 channels.

4 Twelve I/O channels configured as block multiplex and four I/O channels configured as byte multiplex.

5 A real-time clock with granularity of one millionth of a second directly accessible by the software.

6 The capability to process positive and negative, single and double precision floating point numbers, and the decimal instructions set.

7 Comprehensive error detection and error correction.

8 Error data retention.

9 The capability to stimulate data and/or control registers within the hardware under diagnostic control.

(c) Either of the two processor complexes may be selected as the primary system processor; the other will be the support system processor. The primary system processor will provide continuous monitoring of the utilization of selectable subsystems by monitoring the percentage of activity on the channel to which they are connected. The outputs will be saved in a data base for retrieval at user-selected time intervals. They will be expressed in units appropriate to the resource being monitored.

(d) Enhancements to diagnostic capabilities are some of the major improvements provided. With its microcode/firmware monitoring and fault locating capabilities, and the commercially supplied diagnostic software, the 3083BX will provide automatically invoked procedures which in most cases will diagnose hardware problems with processors, storage and peripherals down to the line replacement item. The multiprocessing diagnostic monitor (MDM) maintenance programs have been adapted for the 3083BX and are part of a new maintenance architecture which provides better systems status information. The automatic diagnostic functions will:

1 Service I/O channels and equipment.

2 Provide the capability to monitor system hardware, power, and temperature alarms.

3 Provide control functions.

4 Provide the interface(s) to retain the processor subsystem error data.

5 Provide the capability of diagnosing processor subsystem failure online without interference to other operations executing concurrently.

6 Contain a record of the current status of the processor subsystem elements which are provided to the computer operator and maintenance positions.

7 Contain equipment controlled only from the local en route facility which will interface via a communication link to a remote Central Support Facility.

(2) Processor 9672−RA4−G3

(a) The S/390 Parallel Enterprise Server 9672 Model RA4, Generation 3 (G3), will replace the 3083 Model BX1 as the central processing unit for the CCCH system. Each 9672 can be divided into four functional subsystems: processor, storage, channel, and power.

(b) Each processor subsystem consists of four Processing Units (PUs). A PU is the hardware computing element of the computer. The three possible functions of the PU is determined by the Licensed Internal Code (LIC) which is loaded on it. The first is Central Processor (CP) LIC, which gives the PU the S/390 functionality. The second is the System Assist Processor (SAP) LIC which gives the PU internal system and I/O control functions. The third function is that of spare. In this state, the PU performs an idle loop program LIC. The 9672−RA4 uses the CP and SAP functions and maintains one spare for each. The SAP spare if needed will be switched in automatically, where the CP spare requires a Power On Reset (POR) to activate. The 9672−RA4 is a Complimentary Metal Oxide Semiconductor (CMOS) processor running at approximately 32 MIPS, expandable to 45 MIPS within the same processor family.

(c) The storage subsystem is distributed across the Multiple Chip Module (MCM) and four memory cards of 128 megabytes each. The 9672−RA4 can be configured from a minimum of 512 megabytes up to 8 gigabytes.

(d) The channel subsystem consists of six parallel channel cards, each controlling three channels (16 currently used); four Enterprise System Connection (ESCON) fiber optic channels (one currently used). The parallel channels connect to the existing I/O interfaces utilized by the 3083BX. The ESCON channel is used as a Channel to Channel (CTC) device allowing the two 9672 processors to perform health checking operations. The 9672−RA4 is expandable to 96 parallel channels (increments of three), and 256 ESCON channels (increments of four).

(e) The power subsystem is designed with the use of redundant hardware, whereby a single power failure will not result in an outage. This also allows for replacement of a failed part without affecting system operation. The 9672−RA4 frame accepts dual power feeds, allowing separate critical bus input voltage sources.

(f) The 9672−RA4 frame also contains an IBM Thinkpad PC which is the Support Element (SE). It's purpose during normal operations is to maintain the Central Processing Complex (CPC), collecting and sending CPC status, hardware messages and operating system messages to the Hardware Management Console (HMC). The SE will be used

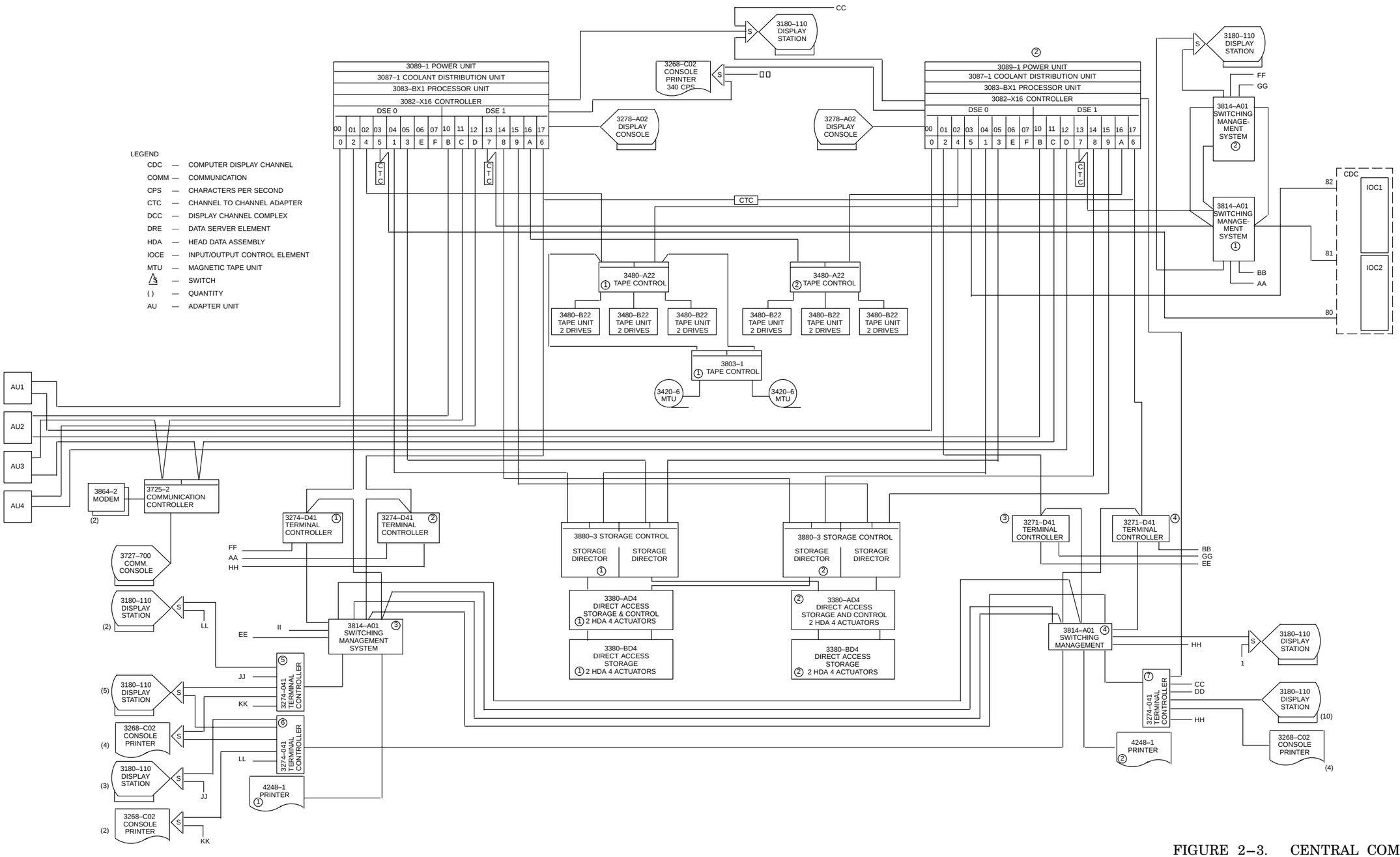

FIGURE 2–3. CENTRAL COMPUTER COMPLEX (CCCH) (CDC SITES)

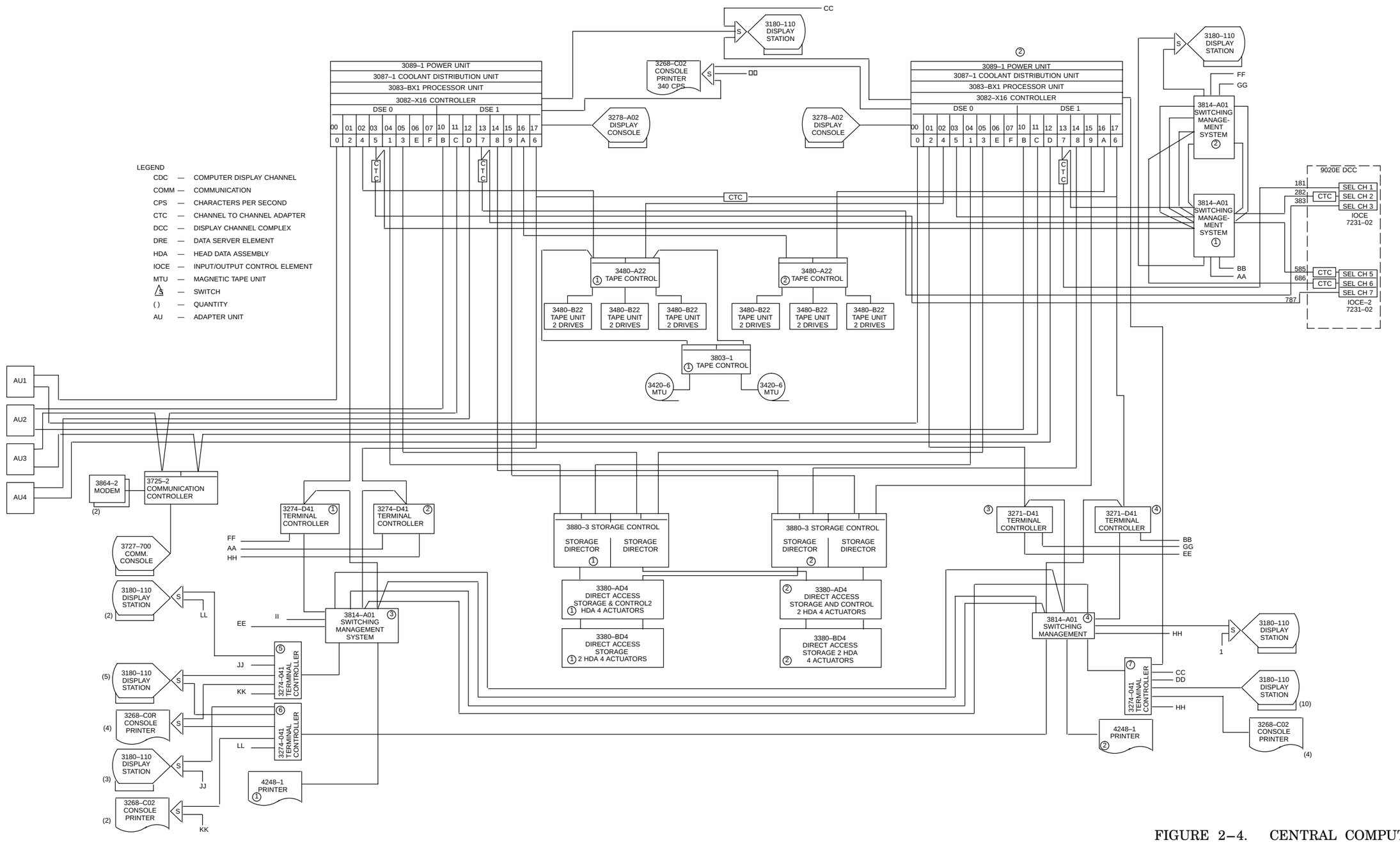

FIGURE 2–4. CENTRAL COMPUTER COMPLEX (CCCH) (DCC SITES)

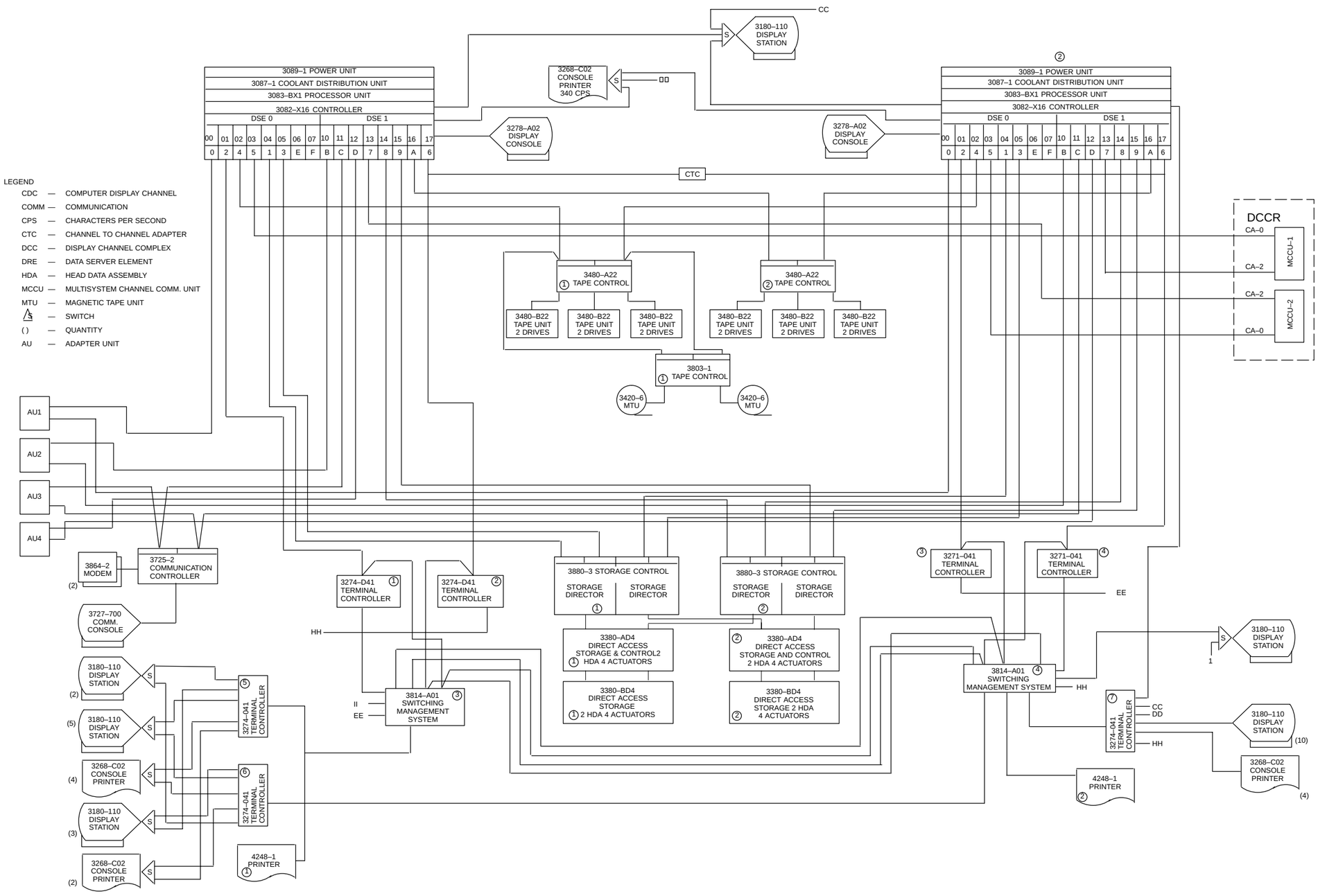

FIGURE 2–5. CENTRAL COMPUTER COMPLEX (CCCH) (DCCR SITES)

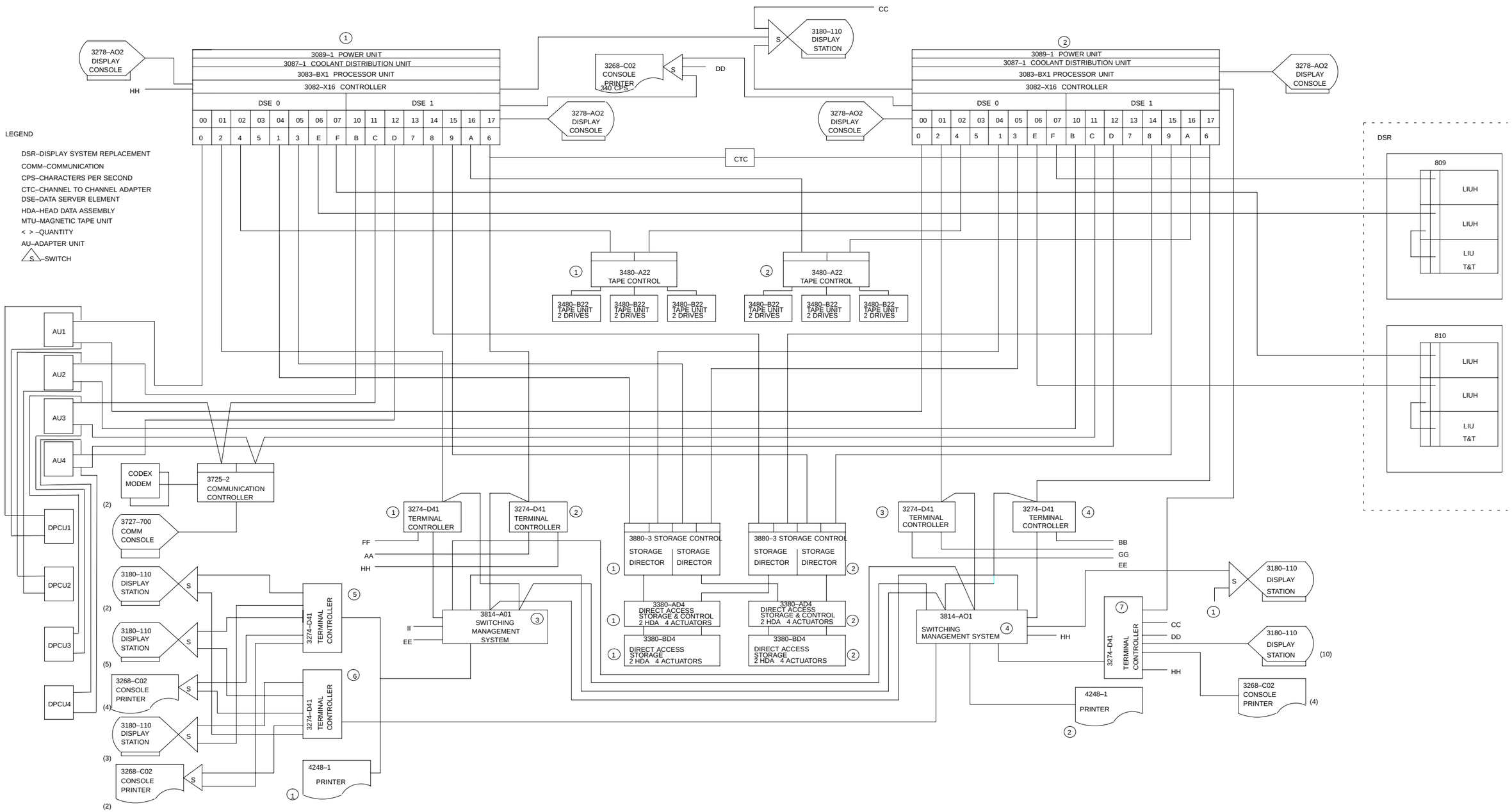

FIGURE 2–6. CENTRAL COMPUTER COMPLEX HOST (CCCH) (DSR SITES)

during periods of 9672−RA4 problem determination, service or repair maintenance, and also for running diagnostic tests for certification. The SE connects via the Thinkpad parallel port to the CPC's Universal Processor Controller (UPC) card.

(g) The HMC workstation is an IBM PC using Operating System/2 (OS/2) LIC, and is designed to be the main operator console, in order to activate, operate, monitor, and perform recovery tasks of the 9672−RA4. The application software is an object oriented design, using a Graphical Users Interface (GUI) platform. The HMC contains a 21 inch color display monitor; a 3.5 inch Read/Write Optical Cartridge (ROC) drive for backups and microcode patch upgrades; a Compact Disc-Read Only Memory (CD−ROM) drive for system software and microcode driver loading; and a modem for the reporting of service calls if necessary. The HMC and SE communicate via a Token-Ring Local Area Network (LAN). The HMC modem features allow for either a manual or automatic callout to the IBM service center from the HMC, and an optional call in from the IBM service center to the HMC for downloading new patches to the microcode. The use of these features will be strictly controlled. Only the manual call out function will be utilized to report a service call. This leaves control of the system to local Host operational personnel. Refer to Chapter 5, paragraph 492 of this document for further information and FAA policy concerning this feature.

(3) Direct Access Storage Subsystem.

(a) Two direct access storage subsystems are provided. Each direct access storage subsystem consists of one 3880 Disk Storage Director with four 3380BX direct access storage devices. Each direct access storage device has 2 spindles with a capacity of 1.2 billion bytes (gigabytes) of data per spindle. This is expandable to 2.4 gigabytes per spindle. Each storage director can be expanded to handle at least seven direct access storage device subsystems and it will interface with the processor subsystems on block multiplex channels. The system is configured so that the failure of any single disk control unit, block multiplex channel, or disk drive will not degrade the system operation.

(b) The direct access storage subsystem provides a nominal data transfer rate of 3.0 megabytes per second for each control unit, a total capacity of 10 gigabytes for all drives and of 16 access mechanisms that are all available from both control units. It has the capability to detect and correct data errors or retry the transmission. Each control unit is equipped with an interface that allows access by both processor subsystems.

(4) Switching Management Subsystems. There are four 3814 switches in the internal 3083BX system configuration. These switches are installed in groups of two and each group is controlled as a unit. They are used to control the reconfiguration of the peripherals. Both groups of switches will be controlled from a 3180 console keyboard video display terminal (KVDT) via a 3274 terminal control unit.

(5) Communications Subsystem.

(a) The communication subsystem consists of a 3725 Communications Controller, a 3727 Communications Console, and a CODEX Modem.

(b) Communication subsystems provide communication between the ARTCC support processor and central support facility processor for the transfer of files and interaction of data base and diagnostic functions. The subsystems are also capable of transferring large volumes of data or large software programs between the ARTCC and the central support facility processors, remote execution of system diagnostics, and communications from one ARTCC support processor to another.

(6) Printer Subsystem. Two 4248 high-speed printers are provided in the CCCH system configuration. Each 4248 high-speed printer (HSP) is a self-contained subsystem, capable of communicating with a channel and executing its own internal diagnostics. Each 4248 has a floppy disk reader which contains the software to initial program load (IPL) the controller functions as well as specify diagnostic routines. Each printer is of the impact type, and is capable of printing 132 characters per line and six or eight lines per inch (operable selectable) vertical spacing. They provide 3600 lines of legible print per minute (the FAA operates these units at 2400 lines per minute), on multicopy, pin-feed, fan fold paper, ranging in size from 8−1/2 to 15 inches wide, and output paper stacking. Both printers can be switched to the primary or secondary processor. An amber light on the top of the 4248 is provided to alert the system operator when the printer requires attention. Flight time adjustments are accomplished electronically by running a subroutine from the maintenance panel. A test pattern is generated and analyzed by microcode which adjusts the flight time.

(7) Magnetic Tape Storage Subsystems.

(a) Two cartridge magnetic tape storage subsystems are provided for the CCCH system configura-

tion. Each cartridge tape storage subsystem consists of one 3480 model A22 tape control unit and six 3480 model B22 tape units. The 3480 model B22 tape units will record 18 tracks longitudinally, and has a recording density of 38,000 bits per inch (bpi). The 3480 model A22 tape control units are equipped with two channel switches to allow access by both processor complexes.

(b) One 3803/3420 Magnetic Tape subsystem is provided for the CCCH system configuration. The 3803/3420 Magnetic Tape subsystem consists of one 3803 controller and two 3420 self-loading tape drives. The 3420 Tape Units are separate, multi-density tape drives which are compatible with the existing 800/1600 BPI 2400 tape units. The 3803 tape controller is equipped with two channel switches to allow access by both processor complexes.

(8) KVDT and Console Printer Subsystem.

(a) The KVDT and console printer subsystem consists of seven 3274 terminal control units, twenty-five 3180 KVDT's, and twelve 3268 console printers. The CCCH will detect errors in the subsystem and provide visual and audible error indications on selected KVDT's and printers.

(b) The configuration of the KVDT's and console printer are under software control so that devices that are configured to the primary processor will be reconfigured to the new primary processor after a processor switchover. Devices that are configured to the support processor also will be reconfigured under software control after a processor switchover to the new support processor.

(c) Each 3180 KVDT includes a monochrome display screen; a moveable, detachable keyboard; and an audible alarm to alert the operator of abnormal conditions.

(d) Two KVDT's, one configured to each processor complex, provide dedicated support for system software load purposes. Another KVDT is located at a remote maintenance position and will be manually switchable to either processor complex.

(e) Ten KVDT's replace existing IBM 1052 I/O typewriters and will be individually, manually switchable to either the primary processor or the support processor. At least two of these KVDT's are located at the computer operator position to support NAS, while the location of the remainder is based on each ARTCC's particular operational requirements.

(f) Ten KVDT's are configured to the support processor only. At least one of these KVDT's is located at the computer operator position to support the Virtual Machine (VM) Control Program, while the location of the remainder are based on each ARTCC's particular support requirements.

(g) Two KVDT's, one located at the system maintenance monitor console (SMMC) and the other at the computer operator position, will interface with the primary processor only. They are dedicated to the display of the operational status of system elements (primary and support) including processors, tape drives, disk units, cluster controllers, and adapter units (AU's).

(h) Each 3268 console printer provides a minimum data rate of 300 characters per second and legible print on multicopy, pin-feed, fan-fold paper ranging in size from 8−1/2 to 15 inches wide. These printers are capable of printing in four colors.

(i) One console printer is manually switchable to either processor complex and co-located with the maintenance position KVDT.

(j) Seven console printers are paired, via adaptation, with the NAS operational KVDT's and will be individually, manually switchable to either the primary processor or the support processor.

(k) Four console printers are configured to the support processor. At least one of these is located at the computer operation position to support vertical machine control program, while the location of the remainder is based on each ARTCCs particular support requirements.

(9) Reserved.

(10) Maintenance Systems Printer. Two maintenance systems printers (MSP) printing approximately 300 lines per minute are provided. The printers are located at the systems engineer's position and provide the detailed maintenance printouts from the computer which are too bulky and time consuming to be output by a KVDT. One of the two MSP's is redundant. It can serve as a backup for the operational printer and/or NAS Operations Manager KVDT. The MSP's interface with the byte multiplexer channel through the PAM/adapter units (AU) via general purpose output (GPO) adapters.

(11) Adapter Unit.

(a) The AU provides a facility for the attachment of both local and remote devices to the CCCH.

Its prime function is to provide a CCCH interface to peripheral devices. Important characteristics of the AU are:

1 Provides an interface for the online attachment of peripheral I/O devices by utilizing a byte multiplexer channel in the 3083 processor.

2 Two adapter units make up a functional element and provide the total complement of 256 device addresses that are operationally required.

3 A second functional element consisting of two additional adapter units provide complete redundancy.

4 Adapter units can be reconfigured as a functional element consisting of two adapter units by the CCCH operational computer programs.

5 Each adapter unit is composed of two common interface units. Each common interface unit, interfaces to both CCCH processors by way of byte multiplexer channels and is capable of controlling up to 64 devices.

6 Performs necessary bit/byte conversions and provides byte buffering for the device.

7 Capable of handling input and output data bits serially at a data rate ranging from 2400−19.2K bits per second, or byte parallel at a data rate ranging up to 40K bytes per second.

8 Two types of I/O adapter (IOA) cards are used in the adapter units. One type is for serial operational and one is for parallel operation.

9 The serial I/O adapter cards have eight ports configurable, by embedded firmware control programs, to allow operation with the various attached devices. The first port on each card determines the data rate for all ports on the card.

10 The parallel I/O adapter cards have four ports and are not configurable by the embedded firmware control programs.

11 A maintenance console is included for use in running built-in maintenance diagnostics, setting up unit configuration, and reviewing unit error reports and messages.

c. HID/NAS LAN (HNL) System. The HID/NAS LAN (HNL) system is a Fiber-Distributed Data Interface (FDDI) Local Area Network (LAN) providing a communication exchange environment between nodes attached to the HNL via the FDDI Concentrator. This HID computer system interfaces with the NAS Host Computer System (HCS) and is designed to provide a gateway from the HCS to the FDDI LAN. The Network System Manager (NSM) computer system contains the network management software used to monitor and manage the hardware and software applications resident on the HNL. For more information including maintenance and certification requirements for the entire system, refer to the HNL Maintenance Handbook, Order 6031.

d. DSR Printer Control Unit Rack. The Printer Control Unit rack houses the electronics that manage and control the routing of flight strip data to be printed on the Flight Strip Printers (FSP). Each rack houses a RISC System/6000 processor identified as PCU1 through PCU4. These processors are physically attached to DSR consoles in a way that provides a redundant path for the processing of flight strip data for both the Operational HCS and the Support HCS. The processed data that is printed on FSPs is based on information that is provided by the HCS. Signals received from the PCU processors have to be converted from RS−232 signals to RS−422 signals that can be understood by the FSPs. This function is provided by the Converter/Splitter assemblies mounted within the PCU racks.

55. COMPUTER PROGRAM SUBSYSTEM

a. General. The program provides the full surveillance capability of NAS. Aircraft under surveillance are tracked in the flight plan aided mode as well as in the free mode. Programs required for the ATC operations consist of the operational program and the support program components.

b. Operational Program Component. The operational program component is the set of computer subprograms that provide the selected operational functions for NAS. Entry, processing and dissemination of radar-derived data and flight data information are achieved through these functions.

(1) Message Entry and Checking. The message entry and checking function includes the acceptance and checking of all flight data, track and display control actions, supervisory messages, and interfacility response messages. This function includes the acceptance and error processing, the storage and the response message generation for the messages it processes. All input messages are acceptance checked by the CCCH. Each message must conform to the requirements for that type

of message in terms of format, logic and source. Format checking determines if entered data are in an acceptable format and in the proper sequence. Logic-checking determines whether different items of data are compatible with each other, with adaptation data and with field flight plan data, if applicable. Responses to input messages include the acceptance message (used when the input message passes all checks), the error message (used when the input message contains a correctable error), and the rejection message (used when the input message contains a noncorrectable error).

(a) Flight Data Messages. Flight data messages pertain to the flight plan and its related messages. These include flight plans, amendments, hold messages, beacon code, and altitude-related messages. Flight data messages can be entered from the sector controller positions by the use of the computer entry device (CED) or the quick-action (QA) keys. They can be entered by the radar controller by the use of the data entry controls (DEC). They can also be entered at input/output typewriter (IOT) positions and from adapted remote online devices.

(b) Track Control Actions. Track control input actions can be entered at the radar console by use of the DEC. However, certain track control actions may be entered from the "D" position CED. Typical track control input actions are track message, drop track, coast track, initiate handoff, and select automatic handoff.

(c) Display Control Actions. Display control actions control the arrangement, presence or the lack of data on the PVD and the computer readout device (CRD) at the radar console and/or the DSR R-console. Typical display control actions are: beacon code, readout, code delete, code insert, data block offset, flight plan position, forced data block, and route display.

(d) Supervisory Messages. Supervisory messages are used to adjust the resources of the ARTCC to the ATC load, control bulk store processing, correct radar data, and dispose of I/O problems referred to supervisory positions. They include messages pertaining to radar, radar quality control and resectorization. Supervisory messages can also request restorization and sector assignment printouts, start shutdown, inhibit bulk processing, initiate the system, restore the automated radar terminal system (ARTS) data base, request radar/beacon parameter modifications, registration/collimation analyses, etc. These messages can be entered only from adapted KVDT positions.

(e) Display Channel Control and Request Message. Display channel control and request messages are used to control certain display channel functions and obtain information from the display channel. Tasks accomplished by these messages include the reconfiguration of the display channel, updating of status tables, the request of test patterns, and the request of startover.

(2) Route Conversion and Posting. The route conversion and posting checks the filed route of flight for format, logic and adapted route elements. This function transforms the filed route-of-flight into the converted route-of-flight.

(3) Flight Plan Position Extrapolation, Association Checking and Beacon Code Allocation. These functions calculate initial flight plan fix times, update these fix times, determine the flight plan position and extrapolation status, perform association checking and allocate discrete beacon codes.

(a) Fix-Time Calculation and Updating. The fix-time calculation function calculates the expected time of arrival over all converted fixes from true airspeed, altitude, aircraft characteristics, airport adaptation, stored winds aloft data, route distances and the inserted proposed estimated or actual time.

(b) Flight Plan Position Extrapolation. Based on a parameter time interval, the expected position of the aircraft is calculated from stored flight plan data and calculated fix times. The calculated present flight plan position is displayed to the controller on request.

(c) Association Checking. The association checking function compares the flight plan position with the track position of an active flight. Only those flights for which a "paired track" exists, and a "matched track" is maintained qualify for association checking.

(d) Beacon Code Allocation. Discrete beacon codes are assigned by the computer program. Discrete beacon codes are assigned in code sets depending on whether the aircraft is in a climb, descent or en route status. Within any code set, subsets of codes are assigned based on the aircraft's vertical position in a block of altitudes. Discrete beacon transponder-equipped aircraft that penetrate the airspace

of a non-NAS ARTCC are assigned codes from a special code set.

(4) Local Outputs. This function provides for the output to all devices local to the ARTCC. This includes outputs at displays, typewriters, printers and indicator lamps.

(a) Computer Readout Device Outputs. CRD outputs are routed to the radar controller's CRD display and CRD display located at the "D" and "A" positions.

(b) Situation Display Outputs. Alphanumeric and radar data are selected, formatted and transmitted for display on radar controller's display. The computer-generated displays may be divided into four groups for description convenience: radar data displays, flight position displays, list displays, and requested displays.

1 Radar Data Displays. The following categories of computer-processed radar data are selectable for display at all radar sector positions: all mode 3/A beacon data, all search radar data, selected mode 3/A beacon data and mode C beacon data. Mode C beacon data is selectable by altitude block. In addition, 7700, 7600 and other selected alert beacon codes will be routed to all sectors.

2 Flight Position Displays. This group of computer-generated information contains alphanumeric track and flight plan displays associated with an aircraft track which are periodically updated to indicate the positions of flights under control. The flight display includes a position symbol, a maximum of three lines of alphanumeric data (i.e., a data block), a leader, and a vector.

3 List Displays. The computer program generates flight plan information and controller entered information to be displayed in tabular form on the radar display. The three lists that are displayed are: the departure list, the inbound list, and the hold list.

4 Requested Displays. In addition to the flight plan and list displays, the computer generates other requested displays, as a result of various radar-controller input actions. These displays include limited data blocks, map data, weather data, strobe lines and selected beacon data. The display is dependent on controller selection of range, off centering, trackball position, etc.

(c) Flight Strip Printer Outputs. Sector FSPs output both flight plan related and nonflight plan related messages. Nonflight plan related messages output at the FSP are either those messages that are too lengthy to be output at the CRD or are hard copy output. Such messages include CRD display overflow, general information, program initiated messages (e.g., planned shutdown messages), and other FSP routed messages.

(d) Printer Outputs. Hard copy computer outputs at the high- and medium-speed printers (MSPs) are normally required data for analysis, advanced flow control, data entry error correction, backup of intercenter transfers and for system performance monitoring, etc. Supervisory outputs can be program-initiated or requested printouts.

(e) Beacon Code Selection and Deletion. Each display console has a capability to select up to a maximum of 60 active beacon codes and 10 beacon codes awaiting active status. A beacon code selection list is maintained and may be reused or updated using certain controller actions and IOT messages.

(5) Remote Outputs. The remote outputs function transfers flight and track data between an ARTCC and its adjacent ARTCC's, and between an ARTCC and the ARTS facilities within its boundaries.

(a) Flight Data Transfer. A flight plan for an aircraft departing the ARTCC's airspace is forwarded to the adjacent facility when the flight is within a time parameter of reaching the boundary. Revised flight plan information is forwarded if the flight plan is modified after it has been forwarded to the adjacent facility.

(b) Track Data Transfer. Track data are transmitted between adjacent ARTCC's and between ARTCC's and their ARTS facility. As a tracked flight approaches the boundary of an ARTS facility or another ARTCC, a radar transfer of control actions is initiated.

(6) Adaptation. The scope of operations can be modified by the addition and/or changes of certain parameters and environmental data used by the program subsystem. This flexibility is accomplished by centralizing all such data in a separate area of the program subsystem so that modification of this data becomes a relatively simple task. These data are referred to as adaptation data.

(7) System Monitoring and Control. The system monitoring and control function provides

for the monitoring and control of all CCCH hardware elements and the control of the real time operational program. The subfunctions of system monitoring and control are resource management, error analysis and reconfiguration, startup and startover, system analysis recording (SAR), and recovery data recording.

(a) Resource Management. The resource management subfunction includes the management of storage and input/output.

(b) Error Analysis. This subfunction analyzes errors that occur in I/O operations, CCCH elements and peripheral equipment. It detects and reports on I/O errors and operational recovery from I/O device failures. The subfunction also isolates and reports upon CCCH element errors and programmed recovery of elements failures.

(c) Reconfiguration. In order to maintain a fail-safe system, the computer program manages the configuration of CCCH elements. The CCCH is reconfigured by exchanging an operational element with a redundant element.

(d) Startup and Startover. The startup and startover subfunction provides the capability for the initiation of the NAS at startup, the reinitiation of the system following a system shutdown, and system recovery following CCCH elements errors.

(e) System Analysis Recording. The SAR subfunction transfers data from the CCCH main memory to auxiliary storage while the system is being used operationally. The data is used to provide source data for system analysis and evaluation.

(f) Recovery Data Recording. This subfunction records certain critical data from main memory onto auxiliary storage. This data allows the startover function to restart the system after a shutdown. The recovery data recording subfunction is operated periodically to produce updated versions of the recovery data information.

(8) Multiple Radar Data Processing. Multiple radar data processing (MRDP) permits the system to receive online data and system status from a number of individual radar sites, converts the positional data to a common system reference so that radar sector displays are no longer restricted to a single radar site reference, and selectively filters out redundant radar returns (where overlap coverage exists) to provide effective single coverage over the center's area.

(a) Radar Data Acceptance. Radar data from the RDAT system are accepted into the computer storage for multiple radar data processing. Any radar data messages containing transmission parity errors will be rejected.

(b) Coordinate Conversion. The search and beacon radar positional data are supplied to the CCCH in the form of range and azimuth. The computer program transforms this data from polar (Rho/Theta) to system coordinates.

(c) Data Selection. Each area has an assigned radar site from which the preferred coverage is obtained. In each area, the site providing the best overlap coverage is designated the supplementary site for that area. All other redundant radar data are rejected. Hence, all accepted radar data are either preferred or supplementary.

(d) Pressure Correction of Mode C Altitude Data. Mode C returns are pressure corrected based on the barometric pressure in the vicinity of the aircraft for those aircraft below the minimum assignable flight level for that sector.

(e) Radar Data Correlation. The correlation process examines each radar message which has passed selective rejection and selects the radar datum most likely to represent the present aircraft position.

(f) Slant Range Correction. Prior to being displayed, all radar data are slant-range corrected.

(g) Radar Data Routing for Display. The path for the display of radar data is from the CCCH through the display system. The multiple radar data processing function generates the radar data messages including available map data, and routes these to the display system for display. Only those returns which have been accepted by the selection process for effective single radar coverage are eligible for display. The accepted radar data are tagged as correlated or uncorrelated by the radar correlation process prior to transmission to the display system.

(h) Radar Weather Data Processing. The computer program will handle the processing of digitized radar weather messages and display formatting. The map messages are converted to display messages with X, Y coordinates and transmitted to the display system, along with the radar flight target data for display.

(i) Radar Weather Data Display. The display channel accepts radar weather messages from CCCH through the radar console channel (RCC) and generates appropriate displays.

(9) Automatic Tracking. The tracking function computes the position and velocity of all tracked aircraft within the ARTCC's radar coverage and provides the means for maintaining identity information (in alphanumeric form) with the appropriate search and beacon radar targets on the radar controller's display. Because of the cooperative nature of ATC, flight plan information concerning the planned route of flight, aircraft speed, altitude, and assigned beacon identity code are used in the processing by this function. The acquisition of tracks on search and nondiscrete code beacon targets requires manual action by the controller. Track acquisition on discrete code beacon targets is performed automatically by the computer. Three basic modes are employed for both search and beacon radar tracking:

(a) Flight-Plan-Aided Tracking. Where a track is successfully matched to a flight plan, the stored flight plan route and speed information are used in the prediction process involved in calculating the track position. Schedule changes in course, as indicated in the flight plan route, bias the prediction of track position in the direction of turn.

(b) Free Tracking. This tracking mode utilizes the velocity data derived from previously correlated radar data. The free-tracking mode is employed when the computer program determines that the track cannot be matched properly to the flight plan, when a manual override action is taken by the controller to change the tracking mode to free, or when the track is outside the acceptable lateral deviation determined by the associated checking task.

(c) Coast. Coast mode is used when tracking difficulties are encountered due to lack of radar data, to clutter situations or due to a manual action. If a flight is tracked in the flight-plan-aided mode, the track position is then maintained with flight-plan-aided coast using the flight plan speed and route information. If, however, a flight is tracked in the free-tracking mode, it reverts to free coast using previous radar-derived velocity. In both cases, the coast tracking does not revert to its original mode until the controller manually reacquires the target, except in the case of targets with a discrete beacon code.

(10) Real-Time Quality Control of Radar Data. This function monitors the real-time quality control (RTQC) of radar data by performing tasks which include:

Task 1. Status Message Monitoring

Task 2. Test Message Monitoring

Task 3. Radar Data Counts

Task 4. Registration Analysis

Task 5. Collimation Analysis

The RTQC function operates on a programmed basis and provides the data associated with task 1 through 3. The last two tasks are supported by data that must be requested.

(11) Dynamic Radar Data Simulation. The purpose of this function is to generate search and beacon radar messages to simulate active flights in the system or to generate radar targets for training and testing purposes.

c. Support Program Components. The operational support program components of the NAS computer program subsystem are referred to as the utility program components. The utility component facilitates the preparation, management and maintenance of all NAS operational components, support components, data reduction and analysis and other related software.

(1) Monitor. The utility program component includes monitor services, which assure continuity of software execution and include a compiler, assembler, loader, library edit, symbolic program tape edit, support system edit, compool edit and documentation, chart processor, and cross-reference processor.

(2) Support Programs. The support program components are subprograms that support the preparation of the data base, the generation of the system and system operation.

(3) Data Reduction and Analysis. These programs are for use during program shakedown and operations changeover, as well as normal operations.

(4) Maintenance, Testing and Checkout. This component consists of the programs used for system integration, maintenance, and diagnostic support. These programs include equipment checkout programs, maintenance programs, and special-pur-

pose (e.g., simulation and test input preparation) programs.

56. COMPUTER UPDATE EQUIPMENT FOR CDC, DCC, OR DCCR SITES

a. General.

(1) The CUE stores, processes, and displays CCCH generated flight plan and flight (nonradar) data. The CUE also produces controller generated data, through CED or keyboard action, which is stored, displayed, and transmitted to the CCCH. A third function of the CUE is storage and transmission of processing errors or changes in nonradar keyboard multiplexer (NRKM) configuration to the CCCH and the AMCC. Refer to figures 2–7, 2–8, and 2–9.

(2) The CUE stores, processes, and displays flight plan and flight data update messages from a maximum of 126 active (online) nonradar console positions and up to 42 training console positions. CCCH generated flight plan and flight data are transmitted to the CUE via the peripheral adapter module (PAM) interface where it is stored, processed and displayed, at up to 126 active and 42 training console positions. The CUE subsystem consists of six basic units:

(a) Nonradar keyboard multiplexer (NRKM)

(b) Common logic unit (CLU)

(c) Common logic unit power supply

(d) Nonradar computer readout display (NRCRD)

(e) Nonradar computer entry device (NRCED)

(f) Quick-action panel (QAP)

b. Nonradar Keyboard Multiplexer.

(1) The NRKM provides the interface between the console positions and the CCCH, data storage and processing operations, and timing signals to the CLU. The configuration consists of three active and one spare NRKM. Upon command from the CCCH, the standby NRKM takes over the data processing functions of any one of the three active NRKM's. Depending on the type of failure, reconfiguration of a failed NRKM may occur automatically. Each NRKM can drive up to 20 CLU's with 2 NRCRD's, 2 keyboards, and 2 QAP's attached, plus 2 CLU's with 1 NRCRD, 1 keyboard, and 1 QAP attached. The total drive capability of each NRKM is thus 22 CLU's and 42 NRCRD's, keyboards and QAP's.

(2) The NRKM interfaces with the CCCH AUs through parallel input and output adapters. One set of input/output adapters connects to the primary NRKM interface and the other set connects to the secondary NRKM interface. The CCCH communicates with the NRKM over one of the two adapter sets through twisted pair cable.

(3) Error and status information from each NRKM is reported to the AMCC. A training control panel is provided in the active/standby cabinet to permit switching active console positions to training.

c. Console Positions.

(1) Typical A and D position consoles consist of one common logic unit, one common logic power supply, two nonradar computer readout displays, two keyboards, and two quick-action panels. The common logic unit receives the basic 2 megahertz (MHz) clock and synchronization signals from the NRKM and generates all timing for processing of NRKM refresh, keyboard output, quick-action panel, and keyboard status update data.

(2) All power for the common logic unit, keyboards, and quick-action panels is supplied by the common logic unit power supply. The two nonradar computer readout displays, keyboards, and quick-action panels at a given control sector are driven from different common logic units so that a common logic unit or common logic unit power supply failure disables only one console position. Depression of a quick-action panel key selects the message to be assembled and unlocks the keyboard for controller operation.

(3) The keyboard is used by the controller to compose and edit messages, which appear on the nonradar computer readout display preview area (lower portion), before entering the message into CCCH. Messages from CCCH appear in the computer area (upper portion) of the nonradar computer readout display.

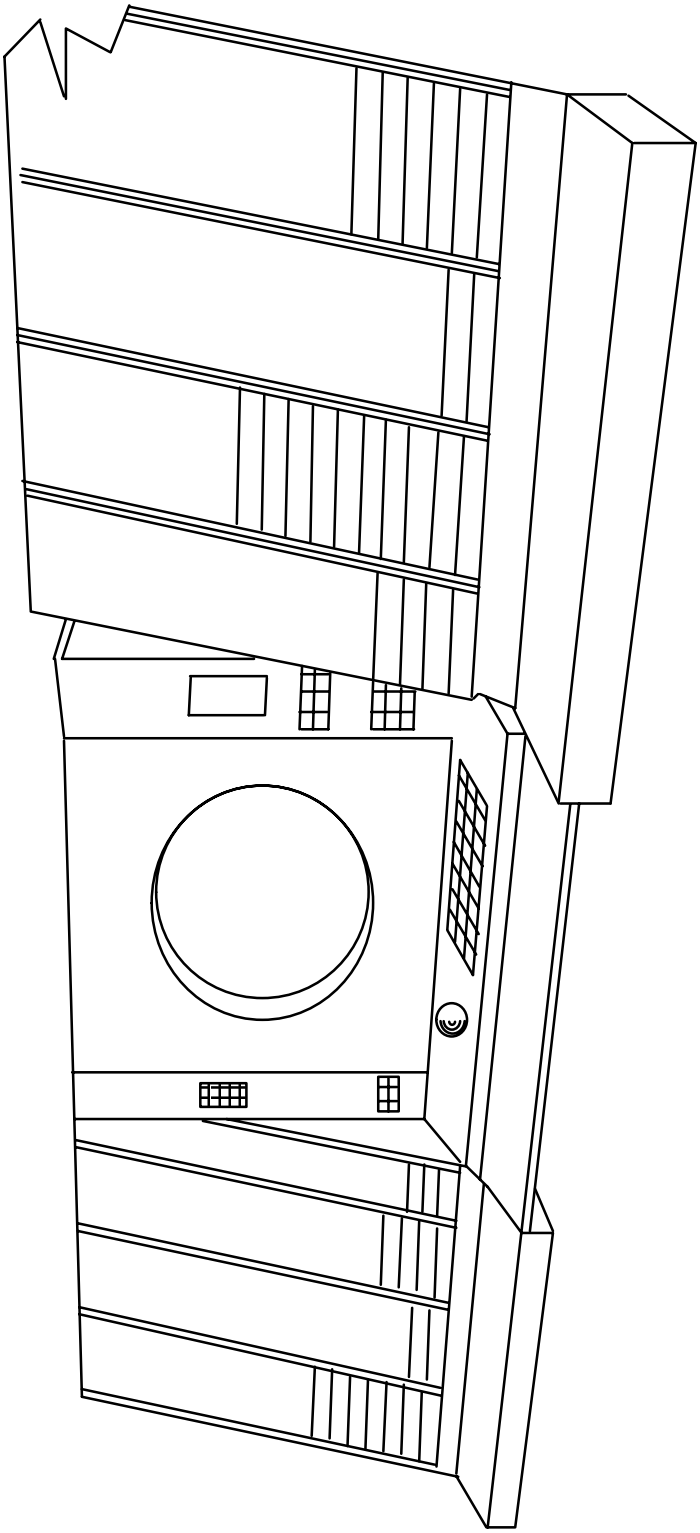

FIGURE 2–7. RADAR CONSOLE

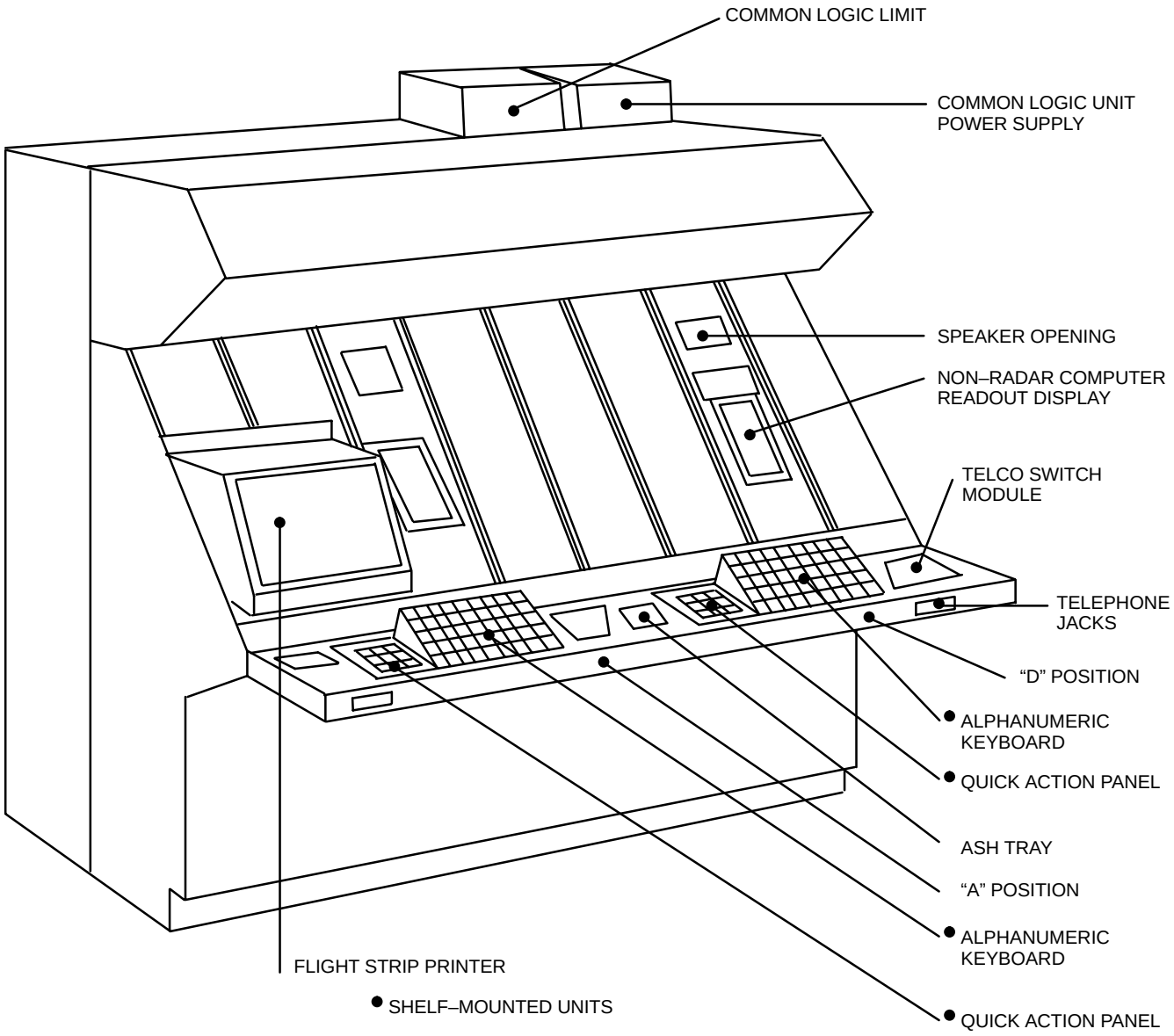

FIGURE 2–8. ARRIVAL AND DEPARTURE (A AND D) POSITIONS, NONRADAR CONSOLE

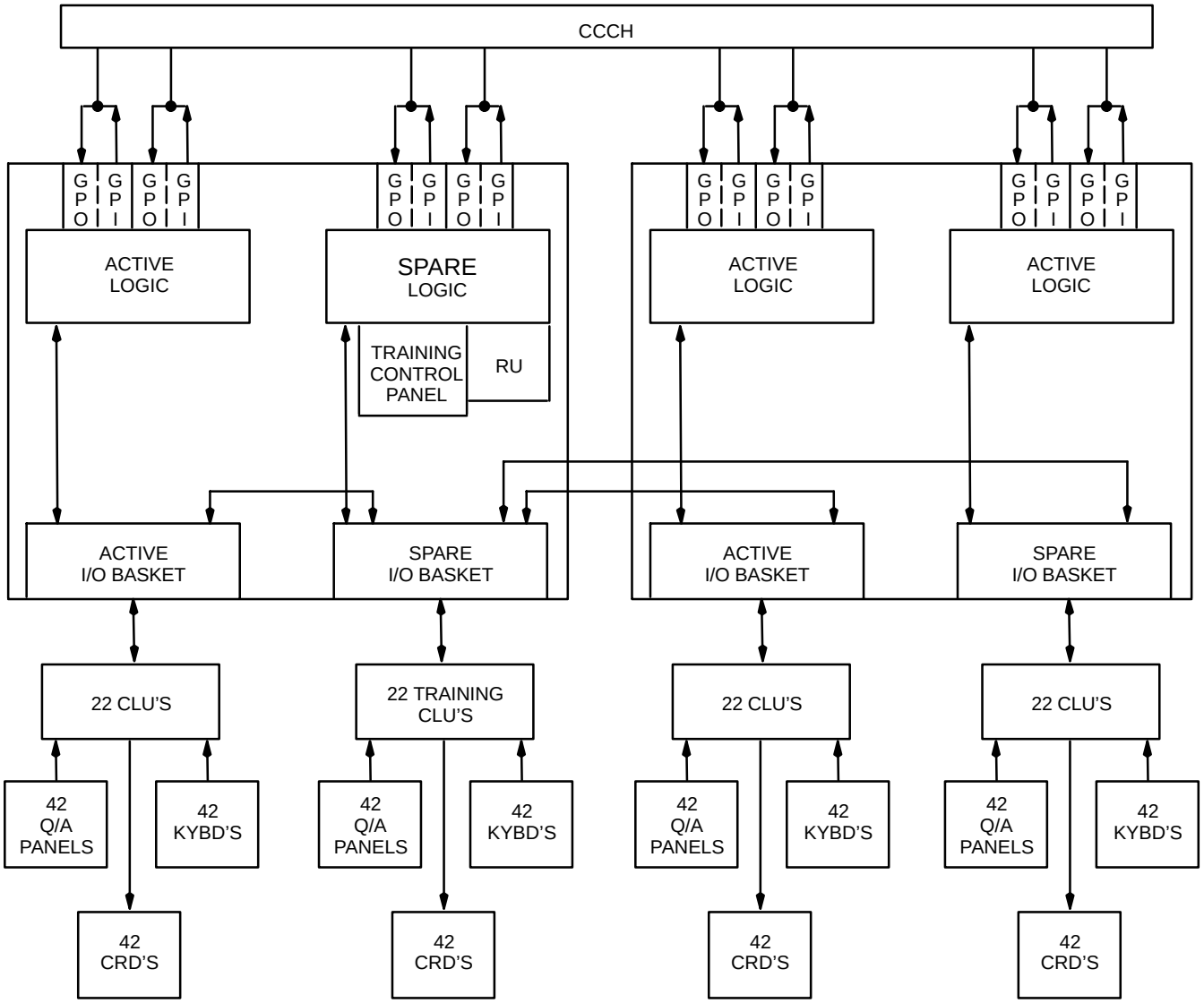

FIGURE 2–9. CUE SYSTEM OVERALL BLOCK DIAGRAM

57. RADAR DISPLAY SUBSYSTEM HARDWARE FOR CDC, DCC, OR DCCR SITES.

a. General. The radar display subsystem (RDS) provides for the interchange of data between the radar controller position and the CCCH. The radar display subsystem consists of one of three subsystems. Certain sites are equipped with the CDC. This subsystem uses a Raytheon 730 computer and algorithm processors for its display processing. Some sites are equipped with the DCC. This subsystem uses the IBM 9020E for its processor. Other sites are equipped with the DCCR. This subsystem uses the IBM 9221−170 for its processor. The CDC and DCC subsystems can accommodate a maximum of 60 operational radar positions, or PVD's. The DCCR subsystem can accommodate a maximum of 90 operational radar positions. The radar display subsystem consists of two types of equipment: (1) that located at the consoles and (2) that common to two or more radar controller consoles. These include plan view displays which are common to all three display subsystems, display generators (DG), and radar keyboard multiplexers (RKM) which are common to both CDC and DCC. The DCCR subsystem provides its own equipment for the DG and RKM functions. This equipment is known as Display Controllers (DC).

b. Common Equipment.

(1) Radar Controller Console Equipment. The radar controller's console contains the CDC devices provided to the R−Controller for use in controlling air traffic (see figure 2−7). Three types of displays and six types of control or entry devices are provided.

(a) Plan View Display. The PVD has a CRT with a usable display surface 20 inches in diameter. Data relating to aircraft in the airspace assigned to a control sector are presented to the radar controller on the PVD. The display of data is controlled automatically by the computer program and manually by the controller through manual entry devices.

(b) Computer Readout Display. This device is similar to the CRD in the "D" and "A" consoles. In response to CCCH program actions or controller requests, the CCCH sends messages to the radar keyboard multiplexer (RKM) which in turn causes these messages to be displayed on the proper CRD. Such messages include flight plan updates, altimeter settings, and error messages.

(c) System Status Indicators. Eight indicators are provided at each radar controller's console to indicate when certain adapted radar systems have failed. Four of these lights will be allocated for "no radar data" conditions.

(d) Field Select Keys. Field select keys are used to select or inhibit the full data block (FDB) leader, the FDB position symbols, or any of the five fields in the alphanumeric character array.

(e) Range Switch. The range switch is used to select any one of 14 ranges (display radius).

(f) Off-Centering Control. The off-centering control is used to permit positioning of the display off-center, in conjunction with the trackball.

(g) Radar History Switch. The history switch is used to select from zero to five scans of radar history.

(h) Full Data Block Leader Length Switch. The FDB leader length switch is used to select one of three available lengths (plus an off position) for the leader between the position symbol and the full data block array.

(i) Full Data Block Velocity Vector Length Switch. Use the full data block velocity vector length switch to select one of four lengths (plus an off position), (in terms of flying time) for the velocity vector.

(j) Mode Keys. The four mode keys are alternate action, backlighted switches. There are three switches and one indicator that are being utilized to indicate the mode of operation of the PVD console. These mode switches and indicators are:

1 Console Power. This is an indicator that shows the state of the PVD power switch located in the adjustment control panel.

2 Display Channel Prime/DARC. This switch is used to select the display generation mode. In the prime mode, the displayed data will be data that has been processed by the CCCH and display channel. In the DARC mode, the data displayed will be data processed by the DARC system.

3 Spare. This was the Digital/TV mode switch, but is no longer used.

4 Console Failure. The console failure switch can be used to indicate a failure at this console. This condition can be sensed and reported to other units.

(k) Trackball. Trackball is used by the controller in communicating with the computer program

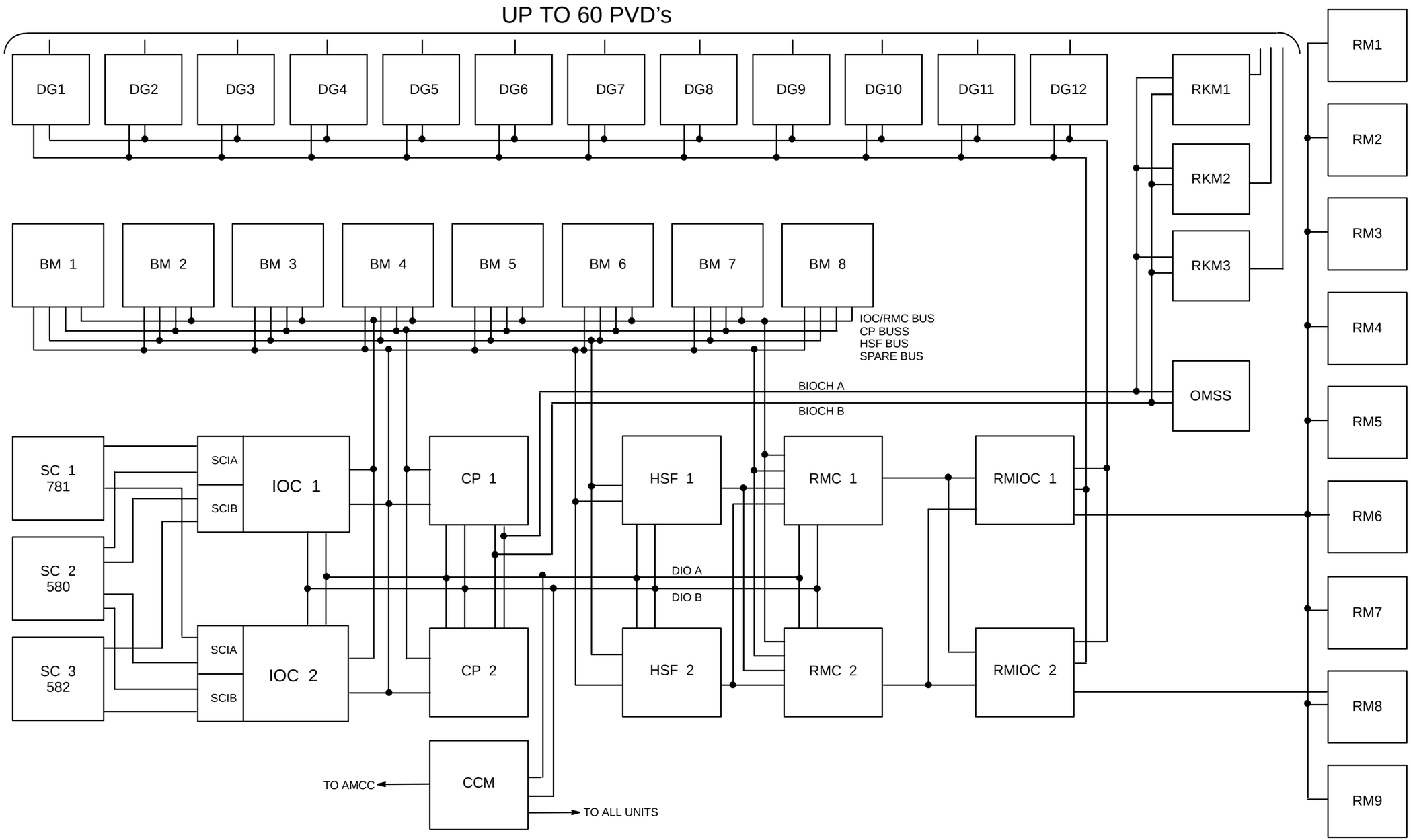

FIGURE 2–10. CDC SYSTEM BLOCK DIAGRAM

and for selecting display coordinates. The trackball allows the controller to: request the identification of any piece of displayed data to the CCCH by specifying its position (for example, the identification of an aircraft); transmit the location of any arbitrary point on the display surface to the CCCH (for example, when vectoring an aircraft); and to off-center the display from a present geographic reference point to an arbitrary geographic reference point.

(l) Display Filter Keys. Twenty-eight keys are provided to enable the radar controller to select or inhibit the class/type of data that are displayed on their PVD.

(m) Category/Function Controls. Category/function controls are used to specify the type of data being entered into the CCCH.

(n) Quick-Action Keys. Quick-action keys are used to make single action entries. The 15 backlighted keys are similar to those at the "D" and "A" positions and function in exactly the same manner.

(o) Alphanumeric Keyboard. An alphanumeric keyboard is located at each radar controller console. The keyboard is identical to that previously described for the "D" and "A" controller's consoles.

(2) Display Generators. The display generator (DG) translates the digital data received from the refresh memory (for CDC) or from the display element (for the DCC) into analog and digital display signals for the PVDs. Each DG contains enough logic to support six PVDs. There is a maximum of 10 active DGs at CDC sites and 15 at DCC sites. There are two spare DGs at each site.

(3) Radar Keyboard Multiplexor. The RKM is the interface unit between the entry/display devices at the radar console (except the PVD), and the remainder of the CDCs or DCCs. Each RKM contains enough logic to support 30 radar consoles. There is a maximum of two active RKMs at CDC sites and three at DCC sites. There is one spare RKM at all sites.

c. Computer Display Channel. The CDC is comprised of elements which perform four basic functions; data processing, radar console refresh, keyboard entry processing, and reconfiguration. Refer to figure 2–10. The elements that provide these functions are:

(1) Input/Output Control (IOC). The IOC provides the interface with the CCCH. It controls the communication of all data and command signals between the CCCH and CDC. The basic objective of the IOC is to transfer data between the CCCH and the CDC buffer memory.

(2) Central Processor. The central processor provides executive control and data processing for the CDC. The unit is a general purpose digital computer.

(3) Buffer Memory. The buffer memory (BM) stores the entire display data base and the central processor program and tables. The refresh memories, are updated from this data base.

(4) High-Speed Filter. The high-speed filter (HSF) is a special-purpose, wired-program processor with the capability to perform a fixed set of processing algorithms at high-speed. The primary function of the HSF is to screen X, Y points in the system coordinates to determine which data points within the data base fall within the geographical area covered by the PVDs, and to do beacon code filtering.

(5) Refresh Memory Control. Refresh memory control (RMC) is a wired-logic processor that accepts data from HSF. The data are further filtered, then processed and formatted and transferred to the refresh memory, where it replaces obsolete data.

(6) Reserved.

(7) Refresh Memory. Refresh memory (RM) provides storage for data to be displayed on the PVD's.

(8) Refresh Memory Input/Output Control (RMIOC). The RMIOC provides the interfaces between the refresh memory control, the refresh memory and the display generator. All data going into or out of the refresh memories are controlled by the RMIOC.

(9) Configuration Control Monitor. The configuration control monitor (CCM) supplies the CDC configuration required for operational ATC functions. Each element in the CDC contains fault sensing analysis logic and interface switching hardware. The CCM collects the status data from the elements and transmits them to the central processor for diagnosis. The CP then generates switching control signals for transfer by the CCM to the elements involved.

d. Display Channel Complex (DCC). The DCC is comprised of elements which perform four basic functions: data processing, PVD refresh, keyboard entry processing, and reconfiguration. Refer to figure 2–11. The elements that provide these functions are:

(1) Computing Element (CE) (7201–02). The CE is the computational, logical and control element of the DCC subsystem.

(2) Storage Element (SE) (7251–09). The SE's provide the primary magnetic core storage for the DCC subsystem. They contain priority logic to determine the order in which CE's and IOCE's will be served in case of simultaneous access.

(3) Input/Output Control Element (IOCE) (7231–02). The DCC's external data routing functions for input/output (I/O) are controlled by the IOCE. The IOCE's provide for the external interfaces through two types of channels; selector and multiplexor channels. Selector channels are used to transfer data between the SE's and high-speed I/O devices (i.e., the CCCH and tape control units (TCU)). Multiplexor channels are used to transfer data between the SE's and low speed I/O devices via a data adapter unit (DAU), configuration console, or integrated control unit (ICU).

(4) Tape Control Unit (TCU) (2803–01). The TCU is the control unit for the 2400 series tape units used in the DCC.

(5) Display Element (DE) (7289–04). Display storage is provided within a 9020E system by the DE.

(6) Data Adapter Unit (2701). The RKMs are interfaced to the I/O control elements via the DAUs. The DAUs provide buffering as well as control functions for the RKMs.

(7) Configuration Console (7264–03). The configuration console provides three basic functions for the DCC:

- System Console
- Configuration Unit
- Status Reporting Unit

The system console portion of the configuration console contains those indicators and controls necessary for the effective monitoring and operation of the DCC. The configuration unit portion of the configuration console provides duplex paths for configuring and monitoring DCC equipment. The status reporting unit contains those indicators necessary for effective system monitoring of the equipment and are provided on the configuration console panel.

(8) Printer Keyboard (1052–07). Printer keyboards are provided for data entry. The keyboards use an entry path through the configuration console.

(9) High-Speed Printer (HSP) (1403–02). The HSP has 132 print positions per line and prints at a maximum rate of 600 lines per minute.

(10) Card Read/Punch (2540). The card read/punch has the capability of reading a maximum of 1000 cards per minute and punching a maximum of 300 cards per minute.

(11) Integrated Control Unit (ICU) (2821–01). The ICU controls the HSP and card read/punch. This control unit connects with the multiplexer channels of the IOCEs.

e. Display Channel Complex Rehost (DCCR). The DCCR is comprised of elements which perform four basic functions; data processing, PVD refresh, keyboard entry processing, and reconfiguration. The relationship between the subsystem elements and system functions are shown in figure 2–13. In order to meet the demanding performance requirements, the DCCR incorporates modular design features that promote high reliability, allowing subsystem tailoring to the needs of different facilities. In a modular design of this type, a failed element is automatically disassociate from the system while the remaining elements continue to function, and a redundant spare is brought into the operational system configuration.

(1) Processor. There are two redundant 9221–170 (ES/9000) processors: the primary and redundant. The IBM 9221–170 Enterprise System/9000 features two 9309–002 racks per processor with 32MB of memory, processes 5.7 million instructions per second and contains 16 selector channels per processor.

(2) Processor Console. There are two Processor Consoles, one per processor. The Processor Consoles are based on the IBM PS/2 Model 57. They have 8MB of memory, 160–MB hard drive, 2.88–MB 3.5-inch diskette, 0.25-inch internal tape drive, IBM PC 3270 communications adapter version B/C, IBM token ring 16/4 adapter, IBM Multiprotocol communications adapter, one serial port, and one parallel port. The PS/2 is also equipped with IBM 8518 Person-

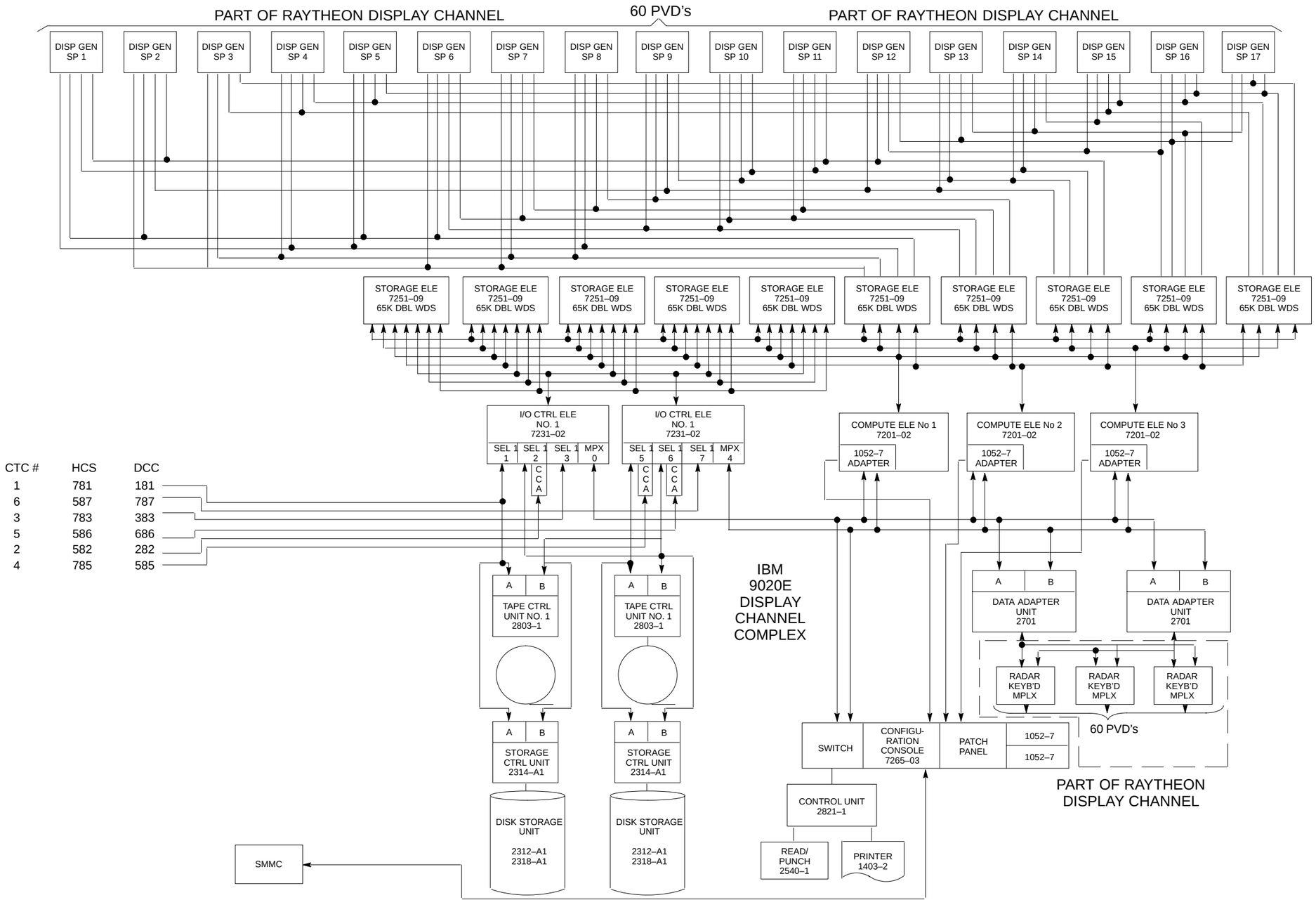

FIGURE 2–11. DCC SYSTEM BLOCK DIAGRAM

al System/2 color display, an IBM Personal System/2 Mouse, and an IBM 5853 2400 BAUD Modem.

(3) Multi-System Channel Communications Unit. There are two Multi-System Channel Communications Units (MCCU); one per processor. It mounts in 9309−002 rack enclosure and manages communications between the primary and backup processors. It also provides a fail-safe communications interface to CCCH and has four available channel adapters.

(4) Terminal Controller. There are two 3174−21L Local Terminal Controllers, mounted in 9309−002 rack enclosure, one per processor. Each controller is capable of supporting up to 64 3270 type devices. Only four devices are installed in this system.

(5) Tape Drive. There are four IBM 3490−B04 Cartridge Tape Drives shared by the two processors. There are 18 tracks, with a data rate of 4.5 MB/second, and a capacity of 200 MB of data in 3480 mode. These tape drives are Read/Write compatible with the 3480 tapes used on the CCCH.

(6) Token Ring Multistation Access Unit. There are two IBM 8228−001 Token Ring Multistation Access Units, one per processor mounted in 9309−002 enclosure and supports up to 8 devices (namely Replacement Input/Output Terminal (RIOT)) PCs and Processor Consoles.

(7) Replacement Input/Output Terminal (RIOT). There are three Replacement IOT's. These consist of 486/33 MHz PC's with 16 MB RAM, 233 MB Hard drive, 1.44-MB diskette, Display Controller (SVGA−1024 X 768 X 65k colors), IBM Token ring 16/4 Adapter, and Attachmate Advanced 3270 Coax Adapter. It provides Microsoft 2-button Mouse, 17-inch color Display. Two of the RIOTs have 132 Column Printers. The third RIOT at the AMCC only provides status information. The printers are attached to the 3174 Controllers.

(8) Display Controller. The display controller (DC) receives the display image data from the IBM 9221−170 via a selector channel. It stores the image in memory and converts the image to displayable PVD or Radar Computer Readout Display (RCRD) data and interface control signals. Radar Controller data is received from the PVD keyboard, stored, processed and forwarded to the IBM 9221−170. There are up to eight Display Controller racks, with three 21-slot, Virtual Memory Editor (VME) nests per rack. Each rack contains power supply and fan assemblies. Each VME nest contains one I/O Processor (IOP) card set and four I/O Adapter (IOA) card sets. The IOP card set has one fv5310, 16-MHz 68020 single board computer, with 2MB of memory and two fv3720, channel adapters. Each IOA card set has one fv5310, 16-MHz 68020 single board computer, 2MB of memory, two PVD controller cards (PVDC) each handling one PVD interface, and one RKM controller card (RKMC) handling 2 PVD interfaces. A Maintenance Terminal (MT) is used to service the DC rack. The MT communicates to the fv5310 maintenance port (RS−232) and is used to collect error log information when the selector channel path to the IBM 9221−170 has failed.

(9) Radar Interface Multiplexer (RIM). There are up to four RIM switch racks. Each switch rack contains two redundant power supplies, up to 24 PVD interface multiplexer switch modules, one alarm sense logic module, and one prime mode control selector switch, which is housed in a small enclosure and controls up to four switch racks. The RIM switch multiplexes one of the two Display Controllers or the DG/RKM to a single PVD. The alarm sense logic module senses switch alarm conditions and reports them to one of the two DC's. The prime mode control selector switch is used to control RIM switch selection between CDC/DCC and DCCR. This switch is only used during testing and transition to DCCR.

58. RADAR DISPLAY SUBSYSTEM SOFTWARE FOR CDC, DCC, OR DCCR SITES.

a. General. The major objectives of this software subsystem are to provide an online operational subsystem capable of supporting the Air Traffic Control Radar Data Processing function; minimize the external effects of equipment failures; process and recover from failures in such a way as to leave no failed units in standby or online status, and no operable units in unavailable status. There is a software subsystem for each of the display systems CDC, DCC, or DCCR. All three perform the same functions and include all necessary operational and support computer programs.

b. Computer Display Channel Functional. The CDC operational computer programs provide the following major functions:

- Startup/Startover
- Fault processing
- Configuration control
- Message processing

- Confidence tests
- Processing control
- CCCH interface processing
- Data processing
- Peripheral equipment processing
- Adaptation data

(1) Startup/Startover. The startup/startover function provides the capabilities for the following functions:

(a) Operater interaction at startup prior to loading for assistance in determining the initial configuration of the system, both for loading and for operational activities.

(b) Initial configuration of the system for operational programs and transmission of associated messages to the CCCH and the operational and maintenance support station (OMSS).

(c) Loading of the operational programs from either the CCCH or the OMSS.

(d) Error handling during program loading and unit switching as specified by the fault processing.

(2) Fault Processing. The fault processor will analyze error reports and indicate to configuration control the actions required to eliminate the error. These actions will result in isolating the error to a faulty unit with a minimum disruption of the displayed data. The reconfiguration sequence is determined by the highest priority error and will not be affected by subsequent errors. The system will not stop processing when sparing is not successful, if the system can operate in a degraded mode without the spare.

(3) Configuration Control. The configuration control function provides the capabilities to perform the following:

(a) Configuration request verification

(b) Data processing subsystem configuration

(c) Refresh subsystem configuration

(d) Manual configuration

(e) Configuration table monitor

Configuration control will perform any requested change if that change will not degrade the system below the minimum operational requirements.

(4) Message Processing.

(a) The message processor will process messages from the CDC teletypewriter, the CCCH, the offline central processor (CP) and the AMCC. In addition, all messages generated by the CDC and destined for the operations maintenance support station (OMSS) line printer, the CCCH, the AMCC, or the offline CP will be processed by this function.

(b) The message processor will process both incoming and outgoing messages to or from the CDC. Each incoming message is checked for conformance to the specified format. A message that does not conform will be considered an invalid message, and an error message will be sent back to the source. Assuming that the message is valid, action will be taken by the message processor to perform the required operation. Required action may be performed by the message processor, or a reconfiguration command may be handled to the configuration control processor. Error responses will be queued (if destined for CCCH) or handed off to other program elements for output to the teletypewriter (TTY) or operations maintenance support station (OMSS) line printer. Error responses to incoming messages will be routed only to the source of the message.

(c) Outgoing messages are received from various processors for routing to the CCCH or CDC printers.

(5) Confidence Tests. Confidence testing is performed to verify the operability of the various hardware configurations within the CDC system. The confidence tests serve two functions:

(a) As a device for maintaining the integrity of the operating online system.

(b) As a procedure to verify that a select hardware configuration is operative.

The primary functions of the confidence tests shall be to detect malfunctioning CDC hardware units where hardware detection logic is impractical or deficient. As a secondary function, the confidence tests are capable of indirectly detecting hardware failures in instances where the hardware detection logic has failed.

(6) Processing Control. The CDC consists of five hard wired processors and one software proces-

sor. The five hard wired processors are the configuration control monitor, input output control, radar keyboard multiplexer, high-speed filters, and refresh memory control. The programmable processor is designated as the central processor. This processor controls and directs the processing of the hard wired processors.

(7) CCCH Interface Processing. The interface communication between the CCCH and CDC is classified as data (input and output) or control messages. This function is responsible for monitoring and controlling the following transmissions:

(a) Transmission of data from CCCH to CDC for display on the PVDs.

(b) Transmission of data from CCCH to CDC for display on the CRD.

(c) Transmission of radar controller composed messages from CDC to CCCH.

(d) Transmission of reconfiguration, test and status messages in either direction.

(e) Control messages and commands to the IOC are employed by CDC to control the transmission of data. Certain data (headers) are used to initiate control messages.

(8) Data Processing. The display system hardware includes three hard wire processors: the RKM, the HSF and the RMC units. The central processor will communicate with the HSF and RMC over the direct input/output (DI/O) channel and the RKM via the byte input/output channel (BIOCH). The three hardware/software interfaces involved are to the RKM, HSF, and RMC.

(a) RKM Interface. The RKM is the primary interface between the radar console and the central processor. Communication between the central processor and RKM is via the BIOCH logic within the central processor and the BIOCH command/data bus. Under software control, commands and/or data to the RKM will provide for the necessary processing of the radar console data.

(b) HSF Interface. The HSF is the primary hardware unit for processing PVD data from buffer memory (BM). Under program control, the HSF will take previously stored data from BM, filter and format the data and send the data to the RMC.

(c) RMC Interface. The RMC is the primary hardware unit for processing PVD display data from the HSF, through the RMC queue, and placing the data into refresh memory. Under program control, the RMC will perform the processing to update the display data in refresh memory.

(9) Peripheral Equipment Processing. This function provides the necessary logic to control the exchange and flow of information between the central processor, BM, and the dedicated peripheral devices attached to the BIOCH. The peripheral devices consist of the following:

(a) Teletypewriter (ASR−35) including teletypewriter, input keyboard, and paper tape reader/punch.

(b) Read/write magnetic tape drive

(c) Medium-speed line printer

(10) Adaptation Data. During CDC startup, the CDC requests transfer of online site parameters from the CCCH. This set of initialization parameters, are adaptable for each ARTCC to match the site configuration. The adaptation software will process the site parameters (adaptation data) received from the CCCH. Error processing will be performed on each field and a list of link addresses will be built and stored in buffer memory for use by the programs.

c. Computer Display Channel Support. The support programs provide the functions necessary to maintain the online functional software, the maintenance and diagnostic software, and the data reduction and analysis software. These support programs run on the offline CCCH system and consists of such functions as assemblers, compilers, line editors, etc.

(1) The major objective of the maintenance and diagnostic software is to; provide a means for verifying the correct operation of the CDC subsystem, to facilitate problem isolation, repair, and restoration. These programs run on the offline CCCH, the offline CDC, or on the test equipment console.

(2) The major objective of the data reduction and analysis software is to provide a means for the reduction and analysis of data recorded by; the System Analysis Recording (SAR) function of the CCCH, the Data LOG (DLOG) function of the CCCH, and the Auto Abort function of the CDC.

d. Display Channel Complex. The DCC operational computer program provides the following major functions:

- System monitoring and control
- Display data processing
- Radar console input and auxiliary outputs
- Central computer complex host inputs and outputs adaptation data

(1) System Monitoring and Control.

(a) The overall control developed for the DCC consists of DCC control, DCC performance monitoring, and control of real-time programs executing in the display channel processor. The DCC control requires the capability to readily reconfigure the DCC modules to accommodate dynamic changes in equipment availability. The DCC performance monitoring provides for orderly detection and isolation of errors so as to minimize their propagation through the system. Control of real-time programs is provided as the operational system contains real-time programs as well as a real-time inputs and outputs.

(b) The display channel processor control capability is centralized in the system monitoring and control function. This function is composed of a number of subfunctions, each responsible for a specific area of executive control. These are:

1 Master operational control.

2 Error analysis and reconfiguration.

3 Startup/Startover.

(c) Each performs a specific set of tasks, and the operation of each requires communication with some or all of the remaining subfunctions. During normal operation only master operational control, which schedules the task programs, controls input/output operations, services interrupts, and maintains timing items, is active. The remaining two subfunctions normally remain inactive and are initiated only upon indication of an error, or by manual request.

(d) Master operational control. Master operational control provides for scheduling of display tasks, input/output of data, interrupt servicing, timing analysis, and system analysis recording control. The scheduling and timing analysis programs are operated upon request. Recording control is concerned with controlling the operations of system analysis recording.

(e) Error analysis and reconfiguration. The error analysis and reconfiguration of the system monitor and control function controls and maintains system performance in the DCC.

1 The error analysis function performs analysis of reported or polled error conditions on all the elements of the DCC. The function operates on the elements of the display channel processor in a manner commensurate with the display channel processor interrupt design philosophy. It operates on the error data from the remainder of the DCC elements, i.e., those elements external to the display channel processor, in a manner commensurate with the interrupt structure at the display channel processor element interface level.

2 The reconfiguration function operates upon the available DCC environment, either by an external (manual initiated) or internal (error analysis determination) demand. This function attempts to maintain the hardware environment required to fulfill the fail-soft/fail-safe system philosophy. The function operates on the display channel processor element status in a manner consistent with the redundant/available element philosophy. The elements of the DCC which are external to the display channel processor are reconfigured in a manner unique to each device under consideration.

(f) Startup and startover. The startup and startover subfunction provides for initiation of the operational computer program at the start of system data progressing activities, reinitiation of the operational program following a temporary cessation of system data processing operations, and system recovery following a halt in system data processing operations.

(2) Display Data Processing.

(a) Information received from the CCCH is composed of orders and data formatted by the CCCH operational programs. Orders are interpreted, and appropriate action is taken on the accompanying data. Information sent to the CCCH is composed of status or operational messages requiring action by the CCCH operational programs.

(b) The bulk of data received by the display channel processor is intended for display on various radar controllers plan view displays (PVD). This is in accordance with selection criteria provided from the controller positions.

(c) There are two major groupings of display data.

1 Radar associated data is the larger grouping. This grouping consists of primary and secondary radar, weather data, limited data block tags, and strobe lines. The CCCH identifies radar associated data to the display channel processor by a number uniquely assigned to each radar site.

2 Display associated data. This grouping consists of full data block tags, tabular information, map data, and miscellaneous lines. This data is addressed to one, two, three, or all displays by the CCCH.

With the exception of tabular data, all data positions are specified in terms of their geographic location within the center boundaries. Tabular data may be located by the CCCH in PVD coordinates. This information, combined with controller actions at the console via the RKM I/O function, determines the display appearance.

(3) Radar Console Input and Auxiliary Outputs. The radar console provides the interface between the computer and the air traffic controller.

(a) The radar console input function includes the inputs used by the controller and the outputs that appear on the auxiliary display equipment of the radar console. By using the various data entry devices at the controllers disposal, such as the category/function keys, the filter keys, the quick-action keys, the alphanumeric keyboard, and the trackball, the controller is able to select and control much of the data being displayed on his PVD, and to compose messages for transmission to the CCCH.

(b) The auxiliary display output devices give the controller supplementary information. The presentation of information on these devices are the alphanumeric keyboard lights, system status lights, and the computer readout devices. These devices are initiated either in reaction to a radar console input, or as the result of a CCCH originated message to the radar controller.

(c) The display channel processor interfaces with the radar console control and auxiliary display devices through the radar keyboard multiplexer (RKM). Each RKM provides an interface with the display channel processor for up to thirty-one operational radar consoles. The consoles connected to an RKM will be numbered consecutively from the first console to the maximum number specified in the online site parameters.

(4) Central Computer Complex Host Inputs and Outputs. This function handles each type of data that is transferred between the CCCH and the DCC. The principal functions served by data crossing the interface are:

(a) The transmission of radar channel data from CCCH to DCC for display on the PVD.

(b) The transmission of auxiliary alphanumeric data from CCCH for display on the radar console computer readout device (RCRD).

(c) Transmission of radar controller composed messages from the DCC to CCCH.

(d) Sending of startup and other DCC initialization data from CCCH to DCC.

(e) Communication of reconfiguration, error, and status messages in either direction.

(5) Adaptation Data. Operational program processing must be adjusted to various conditions. These adjustments are most expediently accomplished through the adaptation function. This function provides the operational program with changeable data which can be readily altered as needed. Alterations are required in order to:

(a) Adjust the program to each specific location. The same display channel processor operational computer program is used at all ARTCCs utilizing the DCC subsystem. Yet, each ARTCC has its own unique parameters. The adaptation function provides means by which the program can be adjusted to each site.

(b) Optimize the performance of the system. Optimization of system performance is aided by the adaptation function's ability to define and alter system performance.

(c) Adjust the system to changes which occur as time passes.

e. Display Channel Complex Support. The support programs provide the functions necessary to maintain the online functional software, the maintenance and diagnostic software, and the data reduction and analysis software. These support programs run on the offline CCCH system and consists of such functions as assemblers, compilers, ink editors, etc.

(1) The major objective of the maintenance and diagnostic software is to; provide a means for verifying the correct operation of the DCC subsystem,

to facilitate problem isolation, repair, and restoration. These programs run on the offline CCCH, the offline DCC, or on the test equipment console.

(2) The major objective of the data reduction and analysis software is to provide a means for the reduction and analysis of data recorded by; the System Analysis Recording (SAR) function of the CCCH and DCC, program abort function of the DCC.

f. Display Channel Complex Rehost (DCCR). The DCCR operational computer programs consist of programs executing in the IBM 9221–170, and on each of the single board computers in the Display Controllers (DC). These computer programs provide the following major functions:

- System monitoring and control
- Display data processing
- Radar console input and auxiliary outputs
- Central Computer Complex Host (CCCH) inputs and outputs along with adaptation data

(1) System Monitoring and Control

(a) The overall control developed for the DCCR consists of DCCR control, DCCR performance monitoring, and control of real-time programs executing in the display channel processor and display controllers. The DCCR control requires the capability to readily reconfigure the DCCR elements to accommodate dynamic changes in equipment availability. The DCCR performance monitoring provides for orderly detection and isolation of errors so as to minimize their propagation through the system. Control of real-time programs is provided as the operational system contains real-time programs as well as real-time input and outputs.

(b) The display channel processor control capability is centralized in the system monitoring and control function. This function is composed of a number of subfunctions, each responsible for a specific area of executive control. These are:

1 Master operational control.

2 Error analysis and reconfiguration.

3 Startup/Startover.

(c) Each performs a specific set of tasks, and the operation of each requires communication with some or all of the remaining subfunctions. During normal operation only master operation control, which schedules the task programs, controls input/output operation, services interrupts, and maintains timing items, is active. The remaining two subfunctions normally remain inactive and are initiated only upon indication of an error, or by manual request.

(d) Master operational control. Master operational control provides for scheduling of display tasks, input/output of data, interrupt servicing, timing analysis, and system analysis recording control. The scheduling and timing analysis programs are operated upon request. Recording control is concerned with controlling the operations of system analysis recording.

(e) Error analysis and reconfiguration. The error analysis and reconfiguration of the system monitor and control function controls and maintains system performance in the DCCR.

1 The error analysis function performs analysis of reported or polled error conditions on all the elements of the DCCR. The function operates on the elements of the display channel processor in a manner commensurate with the display channel processor interrupt design philosophy. It operates on the error data from the remainder of the DCCR elements, i.e., those elements external to the display channel processor, in a manner commensurate with the interrupt structure at the display channel processor element interface level.

2 The reconfiguration function operates upon the available DCCR environment, either by an external (manual initiated) or internal (error analysis determination) demand. This function attempts to maintain the hardware environment required to fulfill the fail-soft/fail-safe system philosophy. The function operates on the display channel processor element status in a manner consistent with the redundant/available element philosophy. The elements of the DCCR which are external to the display channel processor are configured in a manner unique to each device under consideration.

(f) Startup and Startover. The startup and Startover subfunction provides for initiation of the operational computer program at the start of system data processing activities, reinitiation of the operational program following a temporary cessation of system data processing operations, and system recovery following a halt in system data processing operations.

(2) Display Data Processing.

(a) Information received from the CCCH is composed of orders and data formatted by the CCCH operational programs. Orders are interpreted, and appropriate action is taken on the accompanying data. Information sent to the CCCH is composed of status or operational messages requiring action by the CCCH operational programs.

(b) The bulk of data received by the display channel processor is intended for display on various radar controller PVD's. This is in accordance with selection criteria provided from the controller positions.

(c) There are two major groupings of display data.

1 Radar associated data is the larger grouping. This grouping consists of primary and secondary radar, weather data, limited data block tags, and strobe lines. The CCCH identifies radar associated data to the display channel processor by a number uniquely assigned to each radar site.

2 Display associated data. This grouping consists of full data block tags, tabular information, map data, and miscellaneous lines. This data is addressed to one, two, three, or all displays by the CCCH. With the exception of tabular data, all data positions are specified in terms of their geographic location within the center boundaries. Tabular data may be located by the CCCH in PVD coordinates. This information, combined with controller actions at the console, determines the display appearance.

(3) Radar Console Input and Auxiliary Outputs. The radar console provides the interface between the computer and the air traffic controller.

(a) The radar console input function includes the inputs used by the controller and the outputs that appear on the auxiliary display equipment of the radar console. By using the various data entry devices at the controller's disposal, such as the category/function keys, the filter keys, the quick-action keys, the alphanumeric keyboard, and the trackball, the controller is able to select and control much of the data being displayed on his PVD, and to compose messages for transmission to the CCCH.

(b) The auxiliary display output devices give the controller supplementary information. The presentation of information on these devices are the alphanumeric keyboard lights, system status lights, and the computer readout device. These devices are initiated either in reaction to a radar console input, or as the result of a CCCH originated message to the radar controller.

(c) The display channel processor interfaces with the radar console control and auxiliary display devices through the Display Controller (DC) via the radar keyboard multiplexer card (RKMC). Each RKMC provides an interface with the display channel processor for two operational radar consoles.

(4) Central Computer Complex Host Inputs and Outputs. This function handles each type of data that is transferred between the CCCH and the DCCR. The principal functions served by data crossing the interface are:

(a) The transmission of radar channel data from CCCH to DCCR for display on the PVD.

(b) The transmission of auxiliary alphanumeric data from CCCH for display on the radar console computer readout device (RCRD).

(c) Transmission of radar controller composed messages from the DCCR to CCCH.

(d) Sending of startup and other DCCR initialization data from CCCH to DCCR.

(e) Communication of reconfiguration, error, and status messages in either direction.

(5) Adaptation Data. Operational program processing must be adjusted to various conditions. These adjustments are most expediently accomplished through the adaptation function. This function provides the operational program with changeable data which can be readily altered as needed. Alterations are required in order to:

(a) Adjust the program to each specific location. The same display channel processor operational computer program is used at all ARTCC's utilizing the DCCR subsystem. Yet, each ARTCC has its own unique parameters. The adaptation function provides means by which the program can be adjusted to each site.

(b) Optimize the performance of the system. Optimization of system performance is aided by the adaptation function's ability to define and alter system performance.

(c) Adjust the system to changes which occur as time passes.

g. Display Channel Complex Rehost Support. The support programs provide the functions necessary to maintain the online functional software, the maintenance and diagnostic software, and the data reduction and analysis software. Most of these support programs run on the offline CCCH system; however, some run on standalone processors and consist of such functions as assemblers, compilers, link editors, etc.

(1) To support the generation of operational DCCR 9221−170 software programs the following tools are necessary: BAL Assembler; Compool Edit (CMPEDT); Operational System Tape Edit (UNTE); Library Tape Edit (LIBEDT); Disk Convert (DISKCNVT); NAS Link Edit (NASLKED); Compool Documentation (CMPLST); Compool Reference Matrix (XREF); Adaptation Controlled Environment System (ACES).

(2) To support offline analysis of operational software problems, the following tools are required. NAS Core Tape Dump (NASCORE); System Analysis Recording (SAR) reduction program; Recording Data Processor (ULR); Timing Analysis Report Program (TARP); High Resolution Timer Tape Reduction Program (REDUC)

(3) The major objective of the maintenance and diagnostic software is to provide a means of verifying the correct operation of the DCCR subsystem, and to facilitate problem isolation, repair and restoration. These programs run on the offline CCCH, the offline DCCR, or the DC Maintenance Terminal.

(4) The generation of operational DCCR DC software programs is accomplished utilizing a C compiler, assembler, linker, and XRAY simulator development platform. The output of this program is transferred along with the other DCCR computer software programs to the CCCH platform to be incorporated into the complete DCCR operational software image.

59. COMMUNICATIONS SUBSYSTEMS.

The communications subsystem consists of equipment and transmission media for the transfer of flight data and track data (if appropriate) between an ARTCC and selected facilities (see figures 2−1 and 2−2). In addition the subsystem's equipments provide electronic switching for voice communications. Transfer of both flight data and track data between the ARTCC and adjacent facilities is accomplished via modems and interfacility data channels.

a. National Interfacility Communications System. This system consists of the national and area interfacility transmission networks provided through leased lines, the FAA radio communications link, redundant channel, and alternate route capability. Monitoring and controlling of the networks for efficient management is provided. Multiplexing modems are used throughout this network.

b. The National Transmission Network. This network is known as the backbone and has two main functions. It provides inter ARTCC communication and services as a trunking medium for the area networks. The national transmission network will ultimately use the FAA radio communications link as the transmission medium where it is economically feasible. Leased lines are used in areas not served by the FAA radio communications link. Telephone dial backup is also available, but normally at reduced data rates.

c. The Area Transmission Network. The area transmission network forms a communications link between the ARTCC and remote facilities. These facilities consist of radars, towers and approach control. The media for the area networks consist of FAA radio communication links, leased lines, telephone dial lines, and limited satellite use.

d. Monitoring and Control. Monitoring and control is performed at the ARTCC. The system is monitored and controlled end-to-end from the remote facility to the ARTCC. The monitoring and control subsystem is located at the ARTCC. Redundant channel selection and alternate route selection is performed as part of the monitoring and control function.

60. SYSTEM MAINTENANCE AND MONITORING

a. General. The system performance and status monitoring functions are performed at the AMCC. The AMCC provides a centralized monitoring and control position for the NAS Operations Manager of the ARTCC. The AMCC provides a continual display of status for all major equipment of the system (see figure 2−12). The AMCC's output includes the elements in the major subsystems, where information is available. The system maintenance and monitoring subsystem includes the ability to display inputs from ARTCC radars and selectively display the outputs of the display channel.

b. System Monitoring. The overall monitoring of the ARTCC is performed at the NAS operations Managers position. The AMCC is located in a convenient position in the ARTCC to allow the NAS Operations Manager to provide with ease system status and performance information to other ARTCC supervisory personnel, as appropriate.

c. Digitized Radar Input Monitoring. Search and beacon radar data are digitized at a remote site and transmitted over digital narrowband transmission media to the ARTCC. This data is sent to the AU in the CCCH and to the radar data distribution unit (RDDU) in the DARC. A secondary output from the RDDU goes to the AMCC display indicator for the monitoring of selected categories of digital messages and monitoring radar alarms.

d. Central Computer Complex Host Monitoring. The hardware configuration status console (KCNF) at the AMCC displays status of each CCCH element. It displays mode of operation of the computer, and the configuration of the CCCH modules. These monitoring functions are available at the CCCH system console, as well as the AMCC. The CCCH monitoring includes the monitoring of CP's, logical disk devices address (LDDA), DCUs, AUs, TCUs, HSPs, etc.

e. Display Channel Monitoring. The AMCC displays status and configuration of the display channel equipment. These data are in addition to the automatic advisories, alarms, and reconfiguration signals that are sent to the CCCH and output at the NAS Operations Manager position. An indication of performance level is provided by the display channel to the AMCC. The AMCC subsystem contains a PVD capable of displaying data from any one of the displays of the display channel. A keyboard at the AMCC provides the capability to select data addressed to any display channel display position for simultaneous display at the AMCC. Monitoring of the status and configuration of the display channel equipment is dependent on the type of display channel equipment used.

(1) CDC. The AMCC displays status and configuration of each CDC element.

(2) DCC. The AMCC displays status and configuration of each DCC element.

(3) DCCR. The RIOT is used as a hardware configuration status console (KCNF) at the AMCC and displays status of each DCCR element. It displays mode of operation of the computer, and the configuration of the DCCR elements. These monitoring functions are available at the DCCR system console, as well as the AMCC. The DCCR monitoring includes the monitoring of Central Processors, Tape Control Units and Display Controllers.

f. Radar Air/Ground Communications Status Monitoring. The AMCC provides status display of air/ground radio communications circuits and facilities. Any change of status such as outage or return to service of the radio equipment is reported to the NAS Operations Manager at the AMCC.

g. Navigational Aids Monitoring. These navaids are monitored by facilities, convenient to their locations, such as flight service stations and control towers. Changes in status of the navaids are reported to the NAS Operations Manager at the AMCC.

h. Communication Equipment Monitoring. The AMCC monitors all interfacility and radar data sets, and incoming data channels. Appropriate alarms are provided to the NAS Operations Manager to identify a deteriorating or open-line circuit.

i. Real-Time Quality Control. The operational computer program performs error analysis and real-time quality control analysis for various equipment in the system and provides a printout of the results at the AMCC. These printouts are automatically generated by the CCCH but may also be requested by the NAS Operations Manager.

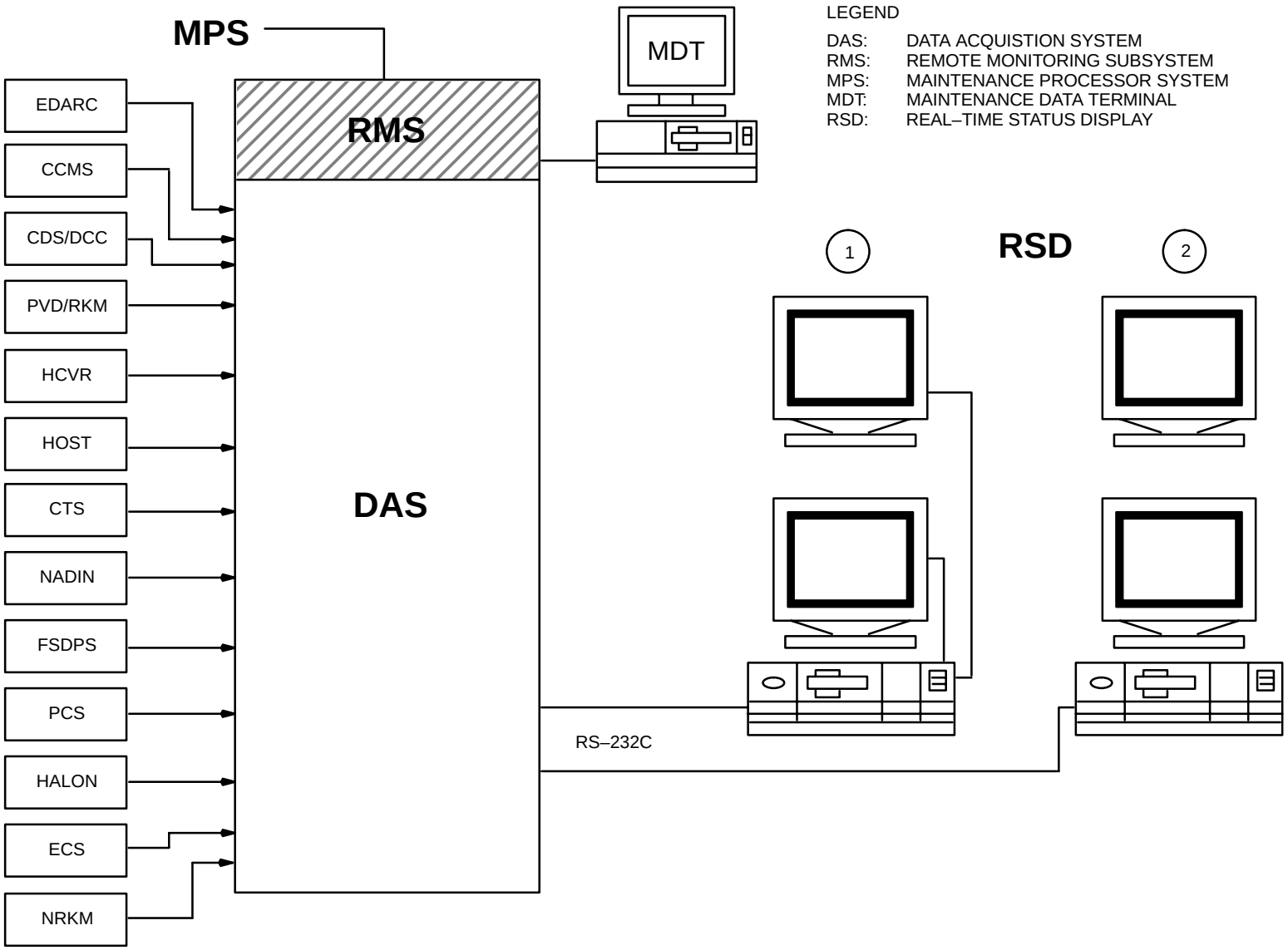

FIGURE 2–12. AMCC FUNCTIONAL BLOCK DIAGRAM

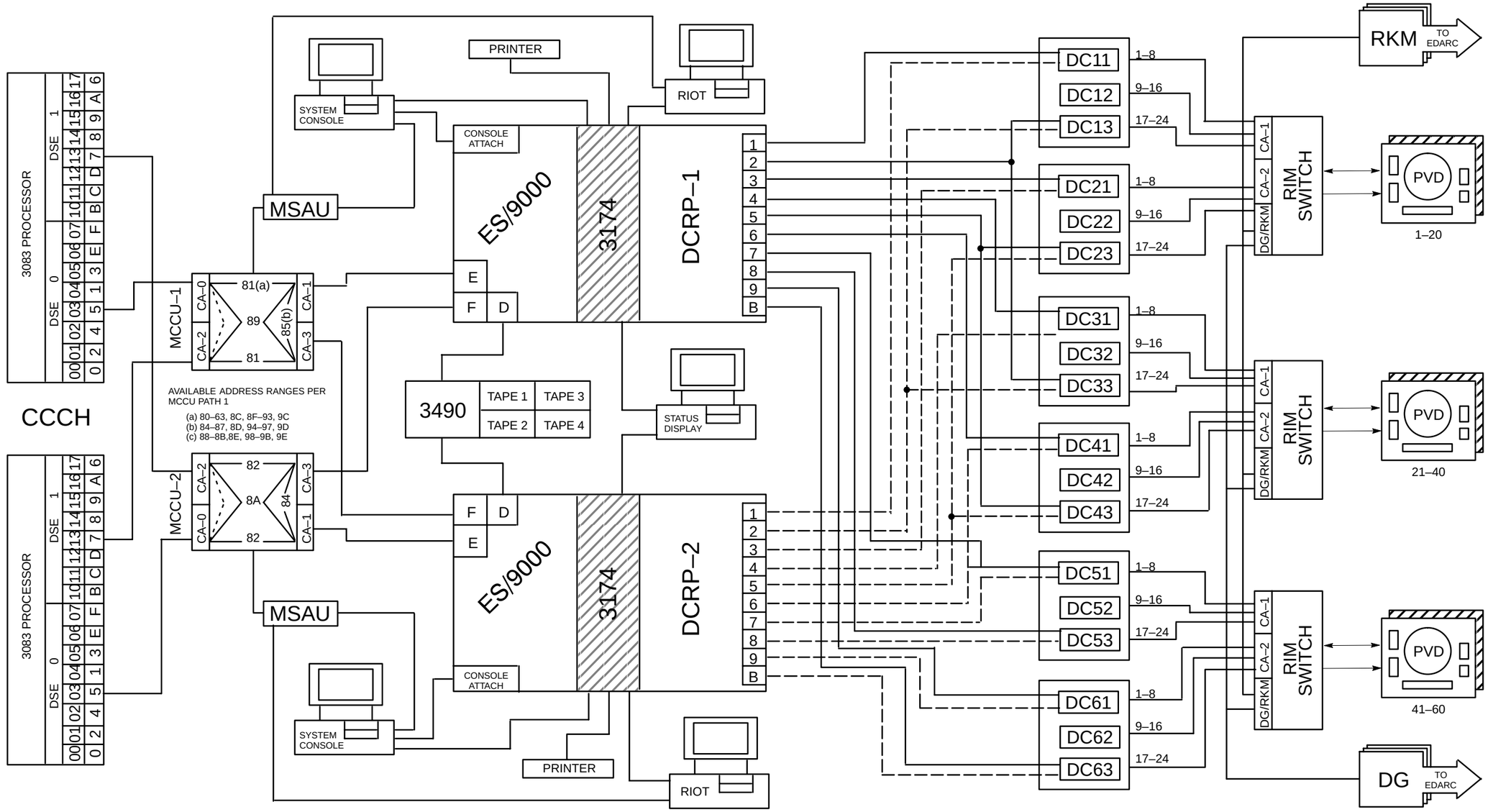

FIGURE 2–13. DCCR SYSTEM BLOCK DIAGRAM

61. DIRECT ACCESS RADAR CHANNEL SUBSYSTEM.

a. General.

(1) The direct access radar channel subsystem is made up of RDS−500 and MC68000 general purpose digital computers designed primarily as the central element for data processing and real-time control. The DARC subsystem is controlled by an executive program, while NAS operations are handled by operational and nonoperational computer program components. The relationship between subsystem elements and system functions are shown in figure 2−15.

(2) In order to meet the demanding performance of the NAS environment, the DARC incorporates design features that promote high reliability, allowing subsystems tailoring to meet the needs of different facilities and providing for expansion. Primary to these ends is the DARC's modular design. In a design of this type, a failed element is automatically disassociated from the system while the remaining elements continue to function, and a spare element is brought into the operational system configuration.

(3) DARC operates in parallel with the PRIME channel and performs a similar, though somewhat reduced scope, RDP functions. As in the case of the PRIME channel, DARC receives digitized radar data via the modem splitters and R-console messages via the RKM; similarly, DARC processes this data and provides refresh images to the DGUs for subsequent display on the PVDs.

(4) DARC operates in either of two modes: DARC/HOST or DARC

(a) DARC/HOST is the most common mode of operation and is used whenever the PRIME channel is fully operational; given this condition, DARC processes radar data in parallel with the PRIME channel and maintains coordination with it via data exchanges on the GPO and General Purpose Input (GPI) communication channel. The resulting DARC data base is maintained primarily for use only in case of a PRIME channel failure; it is not normally used to control the PVD display images.

(b) DARC mode applies when either the PRIME channel or the GPO has failed; given either of these conditions, DARC performs its RDP function wholly independent of the PRIME channel. As in the previously described modes, DARC maintains PVD display images throughout this mode of operation; the decision whether to present the DARC-generated display image or, assuming a GPO failure rather than a PRIME channel failure, the PRIME-channel-generated display image on a given PVD lies wholly in the hands of the individual air traffic controller in the form of a PRIME versus DARC selection switch at the R−Controls console.

b. Major Design Features. The following are some of the major design features that provide flexibility in structuring the DARC subsystem, and in assembling a configuration of elements tailored to meet operational requirements for this backup system.

(1) Each DARC element is a self-contained unit with its own power supply and maintenance panel. Elements of each type may be added to any installation, (up to maximum design limit) with little or no change in the previously installed equipment.

(2) Isolation is provided between DARC elements so that failure of one will not affect the operation of the others.

(3) Each control processor (CP) and display processor (DP) has its own dedicated memory.

(4) Computer program control features and associated hardware logic provides for isolating an element or group of elements from the operational configuration for offline processing, diagnostics program run, repair, etc.

(5) Sufficient storage is provided to contain the operational programs and pertinent data in memory. Direct and indexed addressing are provided to achieve direct addressing of all programs and data in memory. Storage memory is complemented by the use of auxiliary storage devices.

(6) Hardware error detection logic and interrupt signaling capability are provided within each element for detecting failures or marginal conditions. This provides the subsystem with a capability of monitoring the status of each of its elements. In addition to the above, a DARC operator position is provided with the necessary indicators and controls for effective monitoring, control and operation.

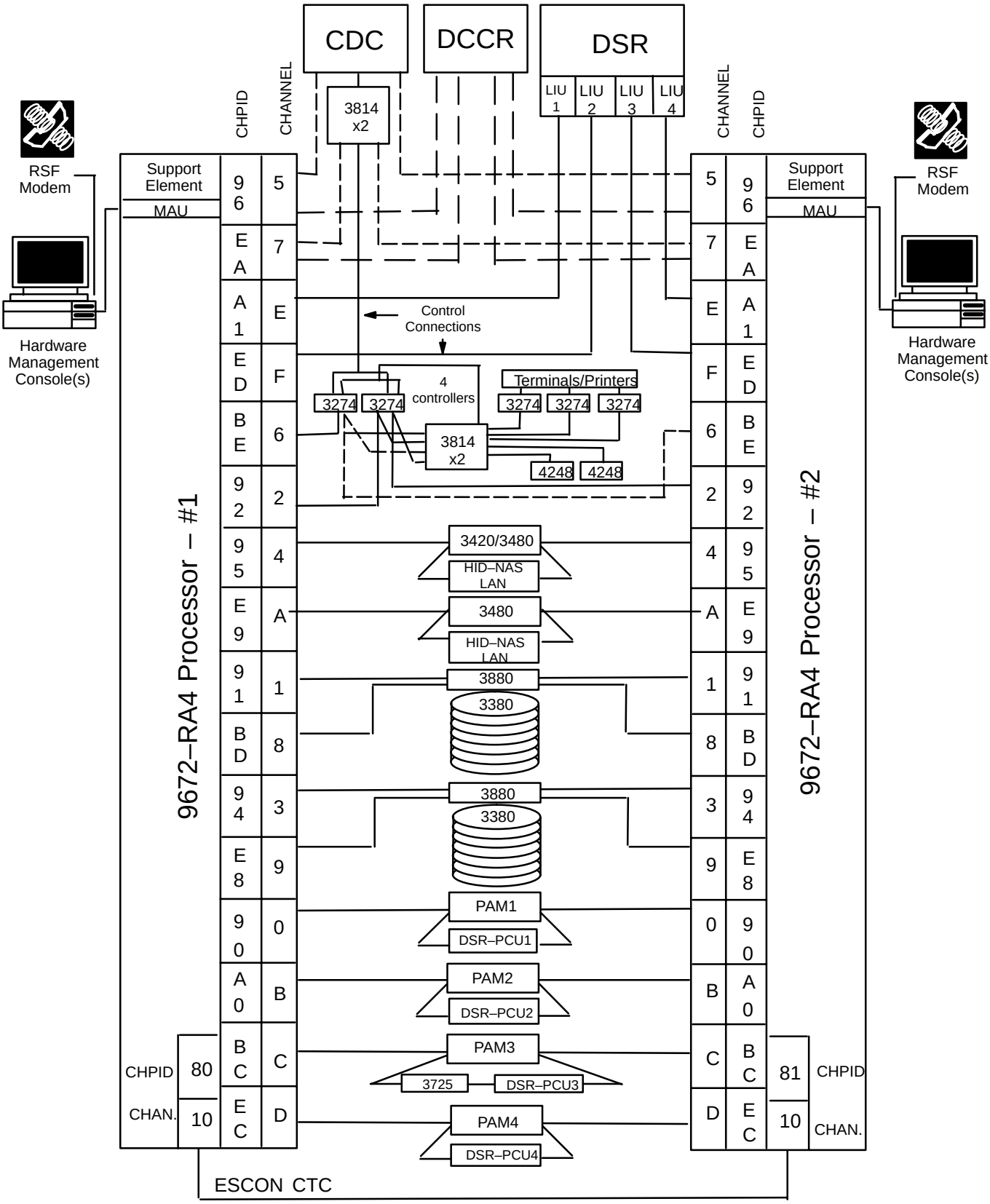

FIGURE 2–14. CENTRAL COMPUTER COMPLEX HOST (CCCH) (9672–RA4)

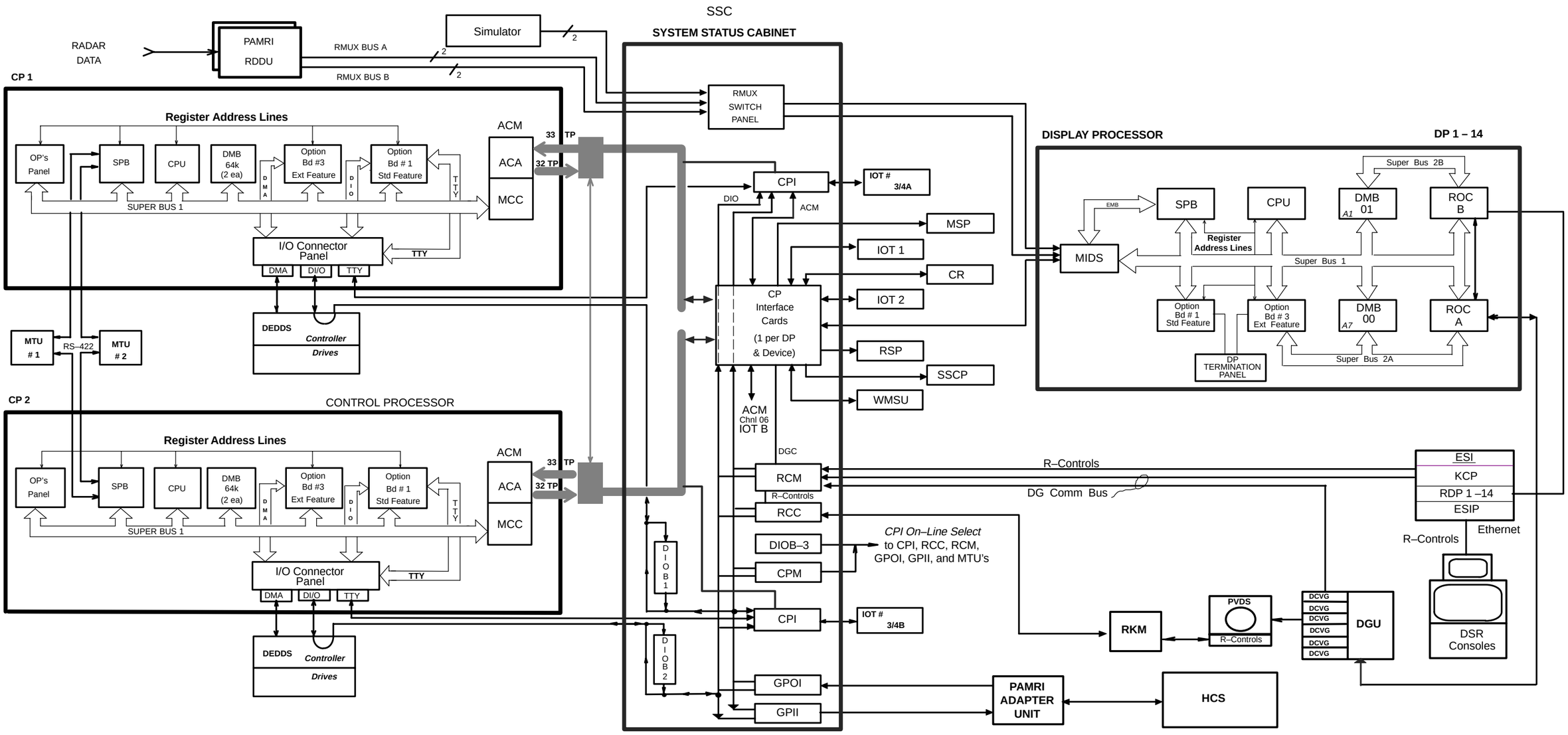

FIGURE 2–15. DARC SYSTEM BLOCK DIAGRAM

c. The DARC Subsystem. The DARC subsystem is made up of separate elements in the following major categories. The quantities in each category in a configuration may vary, depending on the number of operational sectors required. The major categories are:

- Radar Data Distribution Unit
- Display Processors
- Control Processors
- System Status and Control

d. The number of each element type utilized to form a certain DARC system configuration is based upon the requirements of the individual ARTCC. A configuration expansion of up to 14 display processors (DP) is possible. The following descriptions state the important characteristics of each major element.

(1) Radar Data Distribution Unit (RDDU). There are two RDDU's, one acting as primary, while the other acts as the secondary, which is available to replace the primary. The switching requires manual intervention. The RDDU consists of electronic logic for the reception of digital data from up to 25 radar sites via the modem splitters. This data consists of various radar messages, including weather, search, and beacon, and converts them to formats compatible with DARC operations. This radar data is combined with map data and presented as visual information on the PVD's after first being processed by the DARC system DP's. This data is also distributed from the RDDU, to the NAS Operations Manager position at the AMCC and the RDDU maintenance console for analysis of radar data. Within the RDDU cabinet, there are three nests of card chassis. Within each nest there is a maximum of seven radar data adapters (RDA), one radar data Controller (RDC), and one RAPPI interface adapter (RIA). Each RDA contains four Radar Data Processors for a maximum of 25 radar channels per nest (only one radar data processor can be used on the last RDA card) or a total of 75 radar channels. The maintenance console is included for use in running built-in maintenance diagnostic programs, monitoring radar data, and reviewing unit error reports and messages.

(2) Display Processors. The DP's are the heart of the DARC system and account for the majority of system hardware. All DARC data processing functions associated with radar messages and all refresh memory and display generator unit (DGU) interface functions are performed by the display processor. Each DP is paired with a DGU. There are two DP configurations: single cabinet and double cabinet. A single cabinet configuration contains a single DP; a double cabinet contains two DPs. Each DP in the DARC system contains two 64K (65,536) dynamic memory boards (DMB) used for refresh memory and for operating memory of the Raytheon Data System 500 Minicomputer. A modified input data selector (MIDS) and a supplementary processor board perform front-end radar data processing and control CP–DP communications processing. The supplementary processor board has 512K words of local random access memory on-board to store programs and data; and MIDS has 64K words. A battery backup unit (BBU) in each cabinet provides power to all dynamic memories during short power outages.

(3) Control Processors. The DARC system has two (redundant) CPs. The CP provides overall system control. Each CP has a disk memory and an I/O typewriter. The CPs interface with all other system elements through the system status control (SSC) cabinet. During system operation only one CP is online; the offline CP can be made available for backup in the event of failure by inserting the operational program disk and bringing the CP up to standby. The choice of which CP is to function online may be made either manually, by a 3-position switch, or automatically by the control processor monitor (CPM) board which is activated by the same switch.

(4) System Status Control. The SSC cabinet interfaces the DARC system equipment with the redundant CP. The following equipment is individually addressed by either of the two CPs through the SSC under software control, except the printed circuit board tester (PCBT).

(a) Up to 14 DPs.

(b) Two Input./Output Typewriters (IOT).

(c) AMCC system status panel.

(d) Local system status panel.

(e) Line Printer (LP).

(f) Card Reader (CR).

(g) GPO interface.

(h) R–Controls interface.

(i) PCBT.

(j) Magnetic Tape Units (MTU1 and MTU2).

(k) Weather Message Switching Unit (WMSU) interface.

(l) DG Communication interface.

The SSC contains up to 4 uniquely addressable printed circuit boards (PCB) called control processor interface PCB's. Each of these control processor interface PCB's interface with the DI/O bus and a dedicated channel in both CPs. The serial data channels are asynchronous, full-duplex paths, that provide serial bit data between the CP's and DP's, and peripheral devices. This is done through the control processor interface PCB.

(5) DARC System Status Panels (SSP). There are two DARC SSPs; one is located on the SSC cabinet in the DARC equipment room; the other is located at the AMCC. Each panel interfaces with a separate control processor interface PCB in the SSC. Normally both receive status updates from the online CP; however, for maintenance, either may be configured to the offline CP.

(a) AMCC DARC System Status Panel. The AMCC monitors and displays, performance and configuration of the PRIME channel. The DARC SSP at the AMCC provides visual status information about the DARC system equipment. In addition, the PVD configuration display at the AMCC shows which system (PRIME or DARC) is being selected by the controller at each PVD console.

(b) Local System Status Panel. The local SSP is installed in the SSC cabinet in the DARC equipment room. The SSPs provide the ARTCC site personnel with a visual indication of DARC system equipment status. The status of each major equipment gives notice that the designated unit is operating in an online, standby, or unavailable mode. Online means that the unit is operating as part of the DARC operational thread. Standby means that the unit is not operating as part of the operational thread but is available for online operation if required. Unavailable means the unit is not available for operational use. The status of these equipments are controlled by the software during the normal DARC system operation, but may be overridden by the NAS operations manager.

(6) Line Printer. The DARC line printer (LP) is a IBM compatible PC. The LP is used for the following tasks:

(a) Output of current DARC status information (i.e., current system configuration, etc.).

(b) Output of DARC error reports.

(c) Online/Offline program and refresh memory dumps.

(d) Program generation (compilations and assemblies).

(e) Miscellaneous data processing tasks.

(7) Card Reader. The card reader (CR) is an IBM compatible PC, which uses software to emulate a card reader. The personal computer features a standard (RS−232) serial asynchronous interface, and supports an 18-track 3480 type cartridge tape drive. Located in the DARC equipment room, its primary purpose is to provide the means of adding new or altering existing DARC operational programs. These tasks include the following:

(a) Site parameter modification.

(b) Source input of card images for new program assembly.

(c) Program patches.

(d) Other miscellaneous data processing tasks.

(8) Input/Output Typewriters. The DARC system includes six IBM compatible PCs which use software to emulate teletypewriters.

(9) GPI/GPO Interface. The GPI/GPO interfaces are PCBs which allows two way interface between the CCCH and the DARC.

(10) R−Controls Interface. The R-Console interface provides the means of exchanging data between the PVD R-controls, and the DARC CP's. This interface includes the radar controls controller, part of the SSC cabinet, and the RKM I/O logic, which provides the switch function allowing each PVD to interface with either the PRIME channel or DARC.

(11) Printed Circuit Board Tester. The PCBT is not a part of the operating DARC system but is used to test PCBs and to isolate DARC PCB malfunctions to discrete components of the PCBs. The PCBT interfaces with the Simulator via test station driver/receiver PCBs located in the Simulator.

(12) Simulator System. The simulator system cabinet is not part of the operating DARC system,

but may be used for system validation or development. The simulator cabinet includes an RDS−500 minicomputer and disk memory system similar to the CP cabinet. Unlike the CP, however, the simulator includes four 16K core memory modules and a DARC Simulator Module PCB. The DARC simulator module allows simulation of the RDDU, RMUX, and R-controls. It also provides an interface to a dedicated IBM compatible PC for operator control.

(13) Magnetic Tape Units (MTU1 and MTU2). The MTUs, each contains an Overland Data Model T480 Cartridge Tape Drive which provides the DARC system with a mass storage media for storage of data and programs processed within the CP. Each CP can control one or both MTUs. The storage unit stores operational and test support programs, programming debug aids, and other data transactions deemed important to various sites, and for use as input media for updating site parameters formerly performed on punched card readers. In addition the MTUs can record any change to the central track file, flight-plan identification (FLID) and R−Control data.

(14) Disks. Associated with each CP, and physically located in the CP cabinet, is a Raynet cartridge disk drive system. The disks are high-speed bulk memory devices used to store operational, maintenance and test programs of the DARC system. During normal DARC system operation, one of the two CPs is selected by the NAS operations manager as the online (controlling) computer and disk; when this is done, the other computer is in a standby configuration, i.e., available for service. When operating in its standby mode, the second computer and the online computer have operational system cartridges in their respective disk drives. In this operational configuration, the online computer updates the standby disk as required. Other system configurations permit the second computer to be removed from standby service so that it may be used to run maintenance and diagnostic programs.

(15) Control Processor Monitor (CPM). The CPM board is mounted within the SSC cabinet where it is made active or inactive by a three-position switch also mounted in the SSC. Positions CP1 and CP2 select either CP1 or CP2 as the online CP. The intermediate position, AUTO (automatic), transfers the decision making capability to the CPM, which monitors and activates the CPs via the DI/O bus.

62. DIRECT ACCESS RADAR CHANNEL SOFTWARE.

a. Direct Access Radar Channel Operational Software. The DARC operational software provides command control, and status reporting for the system, process radar target, weather, and map data for display on the plan view displays. This computer program performs the following major functions: message entry and checking, local outputs, multiple radar data processing, automatic tracking, real-time quality control of radar data, and adaptation.

(1) Message Entry and Checking.

(a) The DARC program uses several types of input messages to initiate, maintain, and terminate processing of data that are required in providing effective air traffic control. The acceptability and disposition of these input messages are dependent on DARC operating mode and interface level. The input messages are entered into the computer from various positions within the ARTCC. Additionally, several other types of messages are utilized to establish, modify, and control the functional operation and environment of DARC.

(b) Each input message is subjected to various program checks for message completeness and coherency. Each unacceptable message is diagnosed and an indication of the problem area is output to assist personnel in correcting any errors. Input messages are discarded if they are unacceptable. This allows the message source, normally the radar controller's data entry controls, to be unlocked (i.e., freed for entry of another message) rapidly.

(2) Local Output. Local outputs consist of messages sent to the radar controller's plan view display, the input/output teletypewriter, and the medium speed printer. The PVD is used to display radar data, full data blocks, flight, hold, and beacon code lists, current time, mode indicator, altitude filter limits, and preview area. The input/output teletypewriters display acceptance, rejection, requested data, program initiated, and examine parameters messages.

(3) Multiple Radar Data Processing.

(a) The multiple radar data processing function will process, at least once every second, the digitized radar received from the common digitizers. A hierarchy for processing radar data is used. The intent of the processing hierarchy is to prevent the loss of target data due to the processing on non-target (e.g., map and weather) data at times when radar data load exceeds specified design requirements.

(b) The processing hierarchy is such that target data will be of higher priority than non-target data.

(c) The multiple radar data processing function will attempt to correlate the beacon and primary data with established tracks. If a track does not exist, the multiple radar data processing function will attempt to automatically initiate tracks on selected discrete beacon returns only. Test target messages and system status messages are stored for the real-time control of radar data function. Electronic counter measure strobe messages are stored for the local outputs function. Weather messages are received in the form of azimuth and range start and stop coordinates for two levels of outlines (weather maps). These two levels are designated low intensity and high intensity. The multiple radar data processing function performs rho-theta filtering and coordinate conversation on weather messages prior to storing the data in the appropriate output buffers.

(d) The major tasks of the multiple radar data processing function are:

1 Conversion of radar site reference data (rho-theta) to system (X,Y) coordinates.

2 To reject radar returns which lie outside the radar sort box grid or which lie within areas in which other radar(s) is (are) designated as preferential.

3 Pressure correction of mode C altitude data.

4 Correlation of radar returns with established tracks. Correlation is that process of determining the best track-datum pairing.

5 Automatic track initiation on qualified discrete beacon flights.

6 Selection and storage of radar data for registration and collimation analysis.

(4) Automatic Tracking. The primary objective of the automatic tracking function is to maintain identification of aircraft through selected primary and beacon radar position data. In doing so, the automatic tracking function periodically calculates aircraft position and velocity using radar data supplied by the multiple radar data processing function. From the track, the automatic tracking function predicts a new aircraft position to be used with the radar data in the next track calculation.

(5) Real-Time Quality Control of Radar Data. The real-time quality control of radar data function provides quality control features for the software monitoring of radar data. The function performs detection and analysis of the digitized radar data and supplies printed reports as to the quality of the data (status, quantity and accuracy). The data of concern are those transmitted by the radar data processing equipment through the common digitizer. The multiple radar data processing function stores the data dynamically for subsequent processing by the real-time quality control of radar data function.

(6) Adaptation Data. Operational program processing must be adjusted to various conditions. These adjustments are most expediently accomplished through the adaptation function. This function provides the operational programs with changeable data which can be readily altered as needed. Alterations are required to:

(a) Adjust the program to each specific location. The same direct access radar channel operational computer program is used at all ARTCC's. Yet, each ARTCC has its own unique parameters. The adaptation function provides means by which the program can be adjusted to each site.

(b) Optimize the performance of the system. Optimization of the system performance is aided by the adaptation function's ability to define and alter system performance.

(c) Adjust the system to changes which occur as time passes.

63. FLIGHT DATA INPUT OUTPUT.

a. General. The FDIO system distributes flight plan data, weather information, and general information within the ARTCC and to remote sites. The system also receives flight plan data, from the remote sites and sends it to the CCCH. Refer to figure 2−16.

b. Central Control Unit (CCU). The central control units are located at the ARTCC. Each CCU controls and routes data to and from a maximum of 28 remote sites, via modems using RS−232C interface. Each CCU is made up of two sets of redundant equipment assemblies. The processor programs are included within the equipment in read only memory (firmware). One set of equipment is online and one standby, and has automatic and manual reconfiguration capability. The CCUs are interfaced to the CCCH by a GPI/GPO adapter pair in the PAMRI.

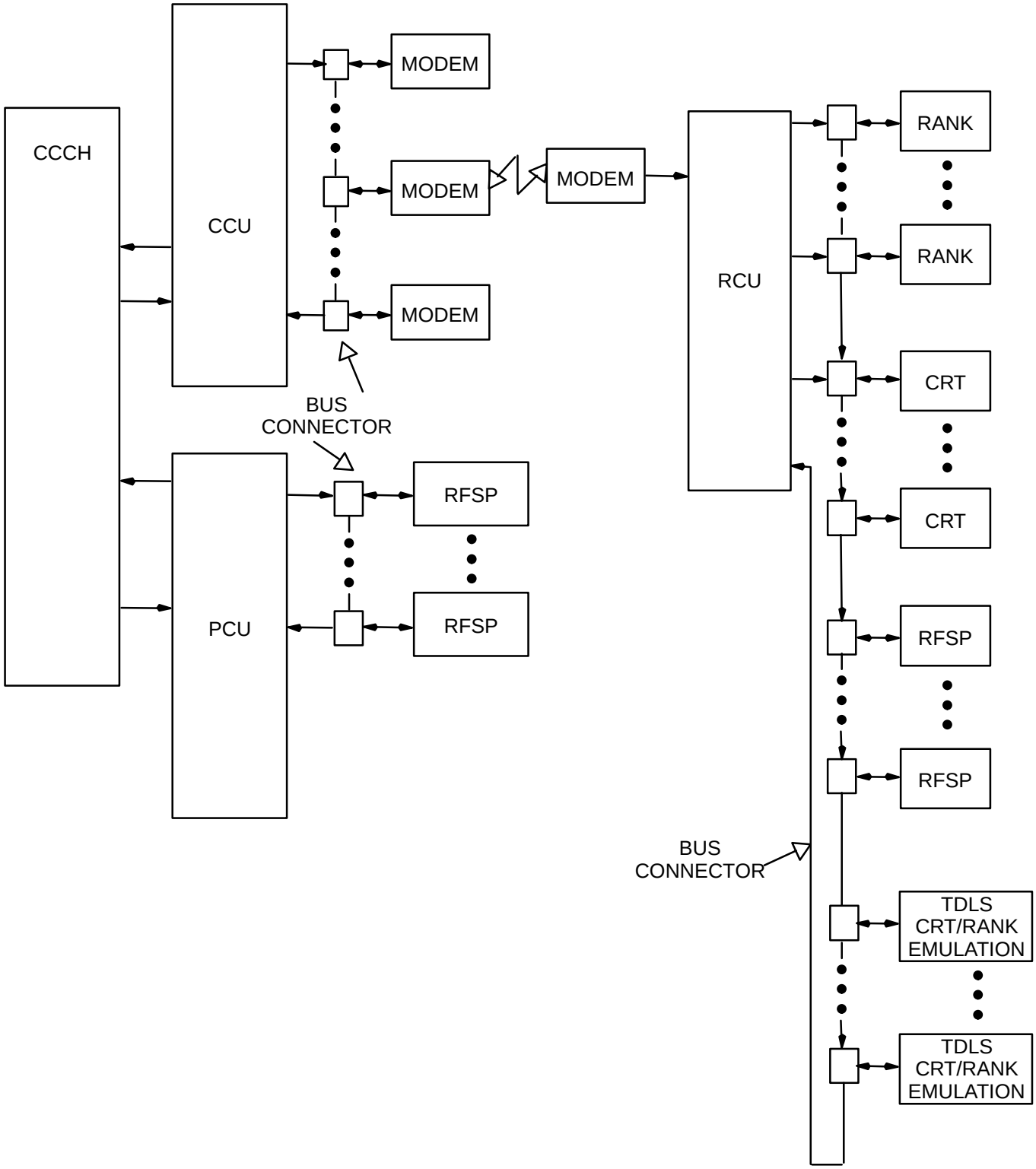

FIGURE 2–16. FDIO SYSTEM FUNCTIONAL BLOCK DIAGRAM

c. Printer Control Unit (PCU). The printer control units are located at the ARTCC. Each PCU controls and routes data to a maximum of 28 flight strip printers within the ARTCC. Each PCU is made up of two sets of redundant equipment which consists of multibus processors and bus connector assemblies. The processor programs are included within the equipment in read only memory (firmware). One set of equipment is online and one standby, and has automatic and manual reconfiguration capability. The PCUs are interfaced to the CCCH serial adapter pairs in the AUs.

d. Remote Control Unit (RCU). The remote control unit is located at the remote sites. Each RCU controls and routes data to a maximum of ten FSPs, five alphanumeric keyboards (ANK), and five CRTs. The RCU consists of a single set of equipment made up of a multibus processor and bus connector assemblies. The processor programs are included within the equipment in read only memory (firmware). There is no redundancy for the RCU equipment. The RCU equipment is interfaced via modems and telephone lines or remote microwave link (RML) to the CCUs at the ARTCC.

e. Flight Strip Printer. The flight strip printer is used in the ARTCC and at the remote sites to print flight plan data. The printer is also used at the remote sites to print error messages.

f. Alphanumeric Keyboard. This device is used to provide an operator interface for entering flight plan data into the system.

g. Cathode-Ray Tube. The CRT is peripheral element used to display flight strip messages, general information messages, weather data, and provides an area for composition and editing of input messages. This device is only located at remote sites.

h. Tower Data Link Services (TDLS). The Tower Data Link Services implements emulation of FDIO RANK and CRT to reduce the number of keyboards and displays in the tower cabs. The FDIO RANK and CRT are emulated on the Pre-Departure Clearance terminal. The Tower Data Link Services terminal shares the FDIO CRT and RANK functions with the Pre-Departure Clearance functions.

64. DISPLAY SYSTEM REPLACEMENT (DSR) SUBSYSTEM LOCAL AREA NETWORK ARCHITECTURE.

a. General The DSR hardware architecture is based on multiple use of RISC−6000 processors on a distributed network connected to token rings for the LCN/HOST and an IEEE 802.3/Ethernet distribution for the BCN/EDARC. There are five sets of Token rings with four rings in each set. There are four sets of 10 Bridges at the intersection of the five sets of Token rings to route data to the appropriate rings. The Ethernet carries EDARC radar and track data to the Backup Control Processor (BCP) through a DAISY chain network. See Figure 2−17, DSR Hardware Architecture.

(1) Token Rings. The five rings are Backbone, Central Access, Test and Training, and two ATC Access. The four sets of Bridges are at the junction of the Central Access and Backbone, Test and Training Access and Backbone, and at the two ATC Access rings.

The Broadcast ring (B) carries transmission of radar surveillance data from the HOST to all R−Consoles. The Recording ring (R) is dedicated to SAR data. The Point-to-Point ring (P) carries Flight Data, time, etc. The Spare ring (S) is used to back up any other ring upon failure by switching the Bridges.

(2) Back-up Channel The Ethernet carries Radar and Track data from the EDARC to the R−Consoles.

65. DISPLAY SYSTEM REPLACEMENT (DSR) SUBSYSTEM HARDWARE (DSR SITES).

a. General. The radar display subsystem (RDS) provides for the interchange of data between the radar controller position and the CCCH. The radar display system consists of the DSR. There are essentially three types of consoles; R, D, and A (see figure 2−17).

(1) R−Console. The views supported are Situation Display, R−Position Computer Readout Device View (R−CRD), Display Control and Status View, and the Time View. The Time View displays Host-provided time and sector number. A version of these same views will be supported for EDARC as well. The switch between Host and EDARC displays is accomplished through the keyboard. The Quick Action Keys are located on the R keyboard.

(2) The D−Console. The views are the D−Position Computer Readout Device View (D−CRD), Display Control View, and the Time View.

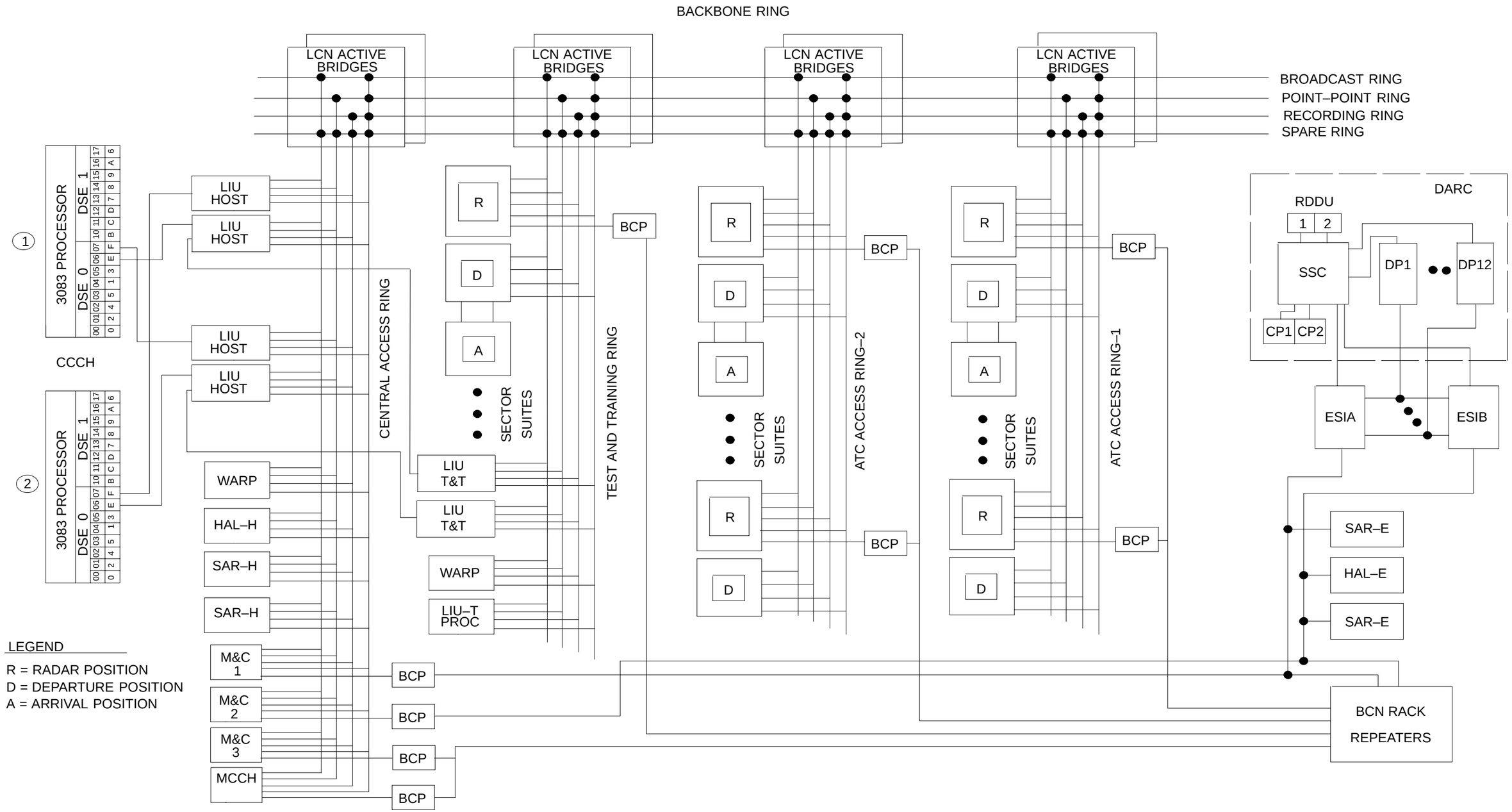

FIGURE 2–17. DISPLAY SYSTEM REPLACEMENT HARDWARE ARCHITECTURE

(3) The A–Console. The A position will support the printing and stuffing of flight progress strips, flight plan entry, flight data amendment, and the composition and distribution of General Information (GI) messages. One single A position will be capable of supporting multiple sectors. The views supported on the A console display are the A–Position Computer Readout Device View (A–CRD), Display Control View, and the Time View.

b. Air Traffic Common Equipment. The DSR is made up primarily of RISC–6000 equipment and is configured to provide the R, D, and A consoles using a primary and backup computer processor for the R console and a primary computer processor for the D and A console.

(1) Radar Controller. R–Display has a 20″ by 20″ raster scan color CRT. The radar controller's display contains the DSR devices provided to the R–Controller for use in controlling air traffic (see figure 2–17). Three types of data are displayed on the CRT.

(a) R Situation Display. The DSR Situation Display provides a geographic area of concern containing target symbols, track data, and weather data. The R–Display has a 20″ by 20″ raster scan color CRT. Data relating to aircraft in the airspace assigned to a control sector are presented to the radar controller on the R–Display via the Token Rings and the Primary Channel Processor (PCP). The display of data is controlled automatically by the computer program and manually by the controller through manual entry devices.

(b) Radar Computer Readout View. The DSR R–CRD view provides for the display of Host messages, entry and display of input messages, the display of message status indicators, and the display and selection of category functions. In response to CCCH program actions or controller requests, the CCCH sends messages via the Token Rings to the Primary Channel Processor (PCP) which in turn causes these messages to be displayed in the R–CRD View made up of the Pick Area, Category Selection Area, Text Area, Response Area, and Message Composition Area of the proper R–Display. Such messages include flight plan updates, altimeter settings, and error messages.

(c) Display Control and Status Logical Display. The Display Control and Status View provides for controlling various display settings such as filters, brightness, trackball cursor speed and size, and audible alarm volume settings. The Display Control and Status View consists of a Panel Control Area and six panels as follows:

1 System Status Panel. This panel consists of four Strobe Indicators, four Radar Indicators, Display Overload Indicator, Display Mode Indicator, Load Shed Indicator, and Host/EDARC Synchronous Indicator. Except for the Display Mode Indicator, if an indicator is active, it will be emphasized. The Display Mode Indicator is always emphasized displaying Host or EDARC whichever is selected.

2 Field Selection Panel. Field select pick areas are used to select or inhibit the full data block (FDB) leader, the FDB position symbols, or any of the five fields in the alphanumeric character array.

3 Display Instrumentation Panel. This pick area is used to select range, vector length, leader length, and history.

a The Range Pick Area is used to select range and also is used to permit positioning of the display off–center, in conjunction with the trackball.

b Radar History Pick Area is used to select from zero to five scans of radar history.

c Full Data Block Leader Length pick area is used to select one of three available lengths (plus an off position) for the leader between the position symbol and the FDB array.

d Full Data Block Velocity Vector Length Pick Area is used to select one of four lengths (plus an off position), (in terms of flying time) for the velocity vector.

4 Display Filter Selection Panel. Twenty–eight pick areas are provided to enable the radar controller to select or inhibit the class/type of data that are displayed on their R–Console.

5 Brightness Control Panel. Provides brightness control for Map, FDB, LDB, Target, WX, CRD, Time, DC and Master.

6 Audible Alarm Volume Control Panel. Provides alarm level control.

(d) Trackball. The trackball and its pick, enter and home keys are used by the R–Display controller in communicating with the computer program and for selecting the display's operating condi-

tion and coordinates. The trackball allows the controller to: request the identification of any piece of displayed data to the CCCH by specifying its position (for example, the identification of an aircraft); transmit the location of any arbitrary point on the display surface to the CCCH (for example, when vectoring an aircraft); and to off-center the display from a present geographic reference point to an arbitrary geographic reference point.

1 Pick Key. Allows the user to specify points and objects without entering a command. The pick key is also used as a decrement (−) feature on the DSR, DC View instrumentation panel, brightness control panel, and audible alarm panel.

2 Enter Key. Allows the user to select an object under the trackball cursor and close the command. The enter key is also used as an increment (+) feature on the DSR, DC view instrumentation panel, brightness control panel, and audible alarm panel.

3 Home Key Allows the user to reposition the cursor at a facility adapted Home location on the R-position display.

(e) R−Keyboard. The R-position keyboard is a QWERTY array augmented with three special-purpose keypad areas.

1 The QWERTY Area. This area includes the keyboard, plus basic computer function keys such as Enter and Clear.

2 Numeric Area. This area includes 10 numeric keys set up similar to a standard telephone and Insert, Delete, and Space keys.

3 Fixed Function Area. There are 24 fixed function keys used for initiating frequently referenced functions with one keystroke.

4 Category/Function Area. There are 12 keys (F1 through F12) associated with six category keys on the keyboard and with the category pick areas in the R−CRD view. A particular category or function can be displayed by pressing one of the hard-labeled keys on the keyboard or by selecting a category in the R−CRD view with the trackball. The functions that are associated with a particular category will be displayed in the Text Area on the R−CRD view.

(2) Data Controller. The D−Display has a 15″ raster scan color CRT. The data controller's display contains the DSR devices provided for use in air traffic control (see figure 2−17). Three types of data are displayed on the CRT. These views cannot be moved or resized. A flight strip printer may also be installed at the D−Position.

(a) The D−CRD View. The D−CRD provides for the display of Host messages, entry and display of input messages, and the display of message status indicators.

(b) The Display Control View. This view provides for the display of audible alarm volume settings (brightness control is provided via hardware).

(c) The Time View displays Host provided time and the sector number.

(d) D−Keyboard. The D-position keyboard is a QWERTY array augmented with two special-purpose keypad areas.

1 The QWERTY Area. This area includes the keyboard, plus basic computer function keys such as Enter and Clear.

2 Numeric Area. This area includes 10 numeric keys set up similar to a standard telephone plus Insert, Delete, and Space keys.

3 Fixed Function Area. There are 24 fixed function keys used for initiating frequently referenced functions with one keystroke. The Quick Action Keys are located on the D keyboard.

(e) Flight Strip Printer. The flight data on flight progress strips is provided via a thermal printer, which dispenses the flight progress strips one at a time. Tearing the strips is not required, as the printer cuts them.

(3) Assistant Controller. The A−Display has a 15″ raster scan color CRT. The Assistant controller's display contains the DSR devices provided for use in air traffic control (see figure 2−17). Three types of data are displayed on the CRT. These views cannot be moved or resized. Two flight strip printers may also be installed at the D−Position.

(a) The A−CRD View. The D−CRD provides for the display of Host messages, entry and display of input messages, and the display of message status indicators.

(b) The Display Control View. This view provides for the display of audible alarm volume

settings (brightness control is provided via hardware).

(c) The Time View. The Time View displays Host provided time.

(d) A–Keyboard. The A-position keyboard is a QWERTY array augmented with two special-purpose keypad areas.

1 The QWERTY Area. This area includes the keyboard, plus basic computer function keys such as Enter and Clear.

2 Numeric Area. This area includes 10 numeric keys set up similar to a standard telephone plus Insert, Delete, and Space keys.

3 Fixed Function Area. There are 24 fixed function keys used for initiating frequently referenced functions with one keystroke. The Quick Action Keys are located on the A keyboard.

(e) Flight Strip Printer. The flight data on flight progress strips is provided via a thermal printer, which dispenses the flight progress strips one at a time. Tearing the strips is not required, as the printer cuts them. Two flight strip printers can be installed at the A position.

(4) Air Traffic Support Equipment. The DSR is made up primarily of RISC–6000 equipment and is configured to provide support consoles using primary and backup computer processors. The H (Handoff) or Tracker position and the Area Manager in Charge (AMIC) is provided with an R–Position. The Traffic Management Unit (TMU) is provided with both R and D positions. The Central Weather Service Unit (CWSU) is provided with an R–Position.

(a) Handoff (H) Position: The H of Tracker position utilizes an existing R–Position console and is provided with a second set of VSCS communications equipment.

(b) Area Manager in Charge (AMIC). The AMIC position is provided with an R–Position that has all the functionality of the R–Controller with the addition of SEE ALL which displays a copy of the displays at a specific sector. This position will also provide the security administration for Air Traffic Personnel.

(c) Traffic Management Unit (TMU). The TMU position is provided with R and D–Positions to provide Air Traffic Management and Flow Control functions.

(d) The Central Weather Service Unit (CWSU). The CWSU is provided with an R–Position console to evaluate and coordinate the dissemination of weather information for Air Traffic Control.

(5) NAS Maintenance Equipment. The DSR is made up primarily of RISC–6000 equipment and is configured to provide Monitor and Control (M&C) functions for the DSR using R–Consoles, History Alert Log processors (HAL), and Printers. This equipment supports tasks on both the HOST–LCN and the EDARC–BCN.

(a) M&C Consoles. The NOM is provided with four R-consoles that are configured to perform three major system management tasks. These are identified as Maintenance and Control HOST (M&C–H), Maintenance and Control EDARC (M&C–E), and Maintenance and Control Configuration (M&C–C).

1 M&C–H Console. This R–Console is configured to monitor the HOST Path Situation Display, typically two consoles, but can be hot-keyed to monitor the EDARC Path Situation Display.

2 M&C–E Console. This R–Console is configured to monitor the EDARC Path Situation Display, typically one console, but can be hot-keyed to monitor the HOST Path Situation Display.

3 M&C–C Console. This is functionally equivalent to the R–Console plus SEE ALL provides radar real-time quality control (RTQC) and Service Level Certification tasks of the NAS for LCN/HOST. This console can be hot-keyed switched to provide the same functions for the BCN/EDARC.

4 History Alert Log Processor (HAL). This RISC–6000 processor provides a 24-hour log and supports the printers for system certification detail reports, rack location records, facility alerts as they occur and diagnostic results reports. One HAL is connected to LCN and one is connected to the BCN.

5 M&C Printers. The HAL processor supports the M&C printers. These printers are 600 cps dot matrix.

(6) NAS Maintenance Support Equipment. The DSR is made up primarily of RISC−6000 equipment and is configured to provide M&C functions for the DSR using R−Consoles, History Alert Log processors (HAL), and Printers. This equipment supports tasks on both the HOST−LCN and the EDARC−BCN.

66. HNL SYSTEM CONFIGURATION.

The HNL, as shown in figure 2−18, consists of the following major equipment:

- Host Interface Device (HID)
- Network Systems Manager (NSM)
- Network Router
- FDDI Concentrator

a. Host Interface Device (HID). The HID is used to communicate between the FDDI LAN users and the HCS. The HID supports the IBM System/370 Input/Output (I/O) Channel protocol to synchronize data transfers between the HCS and the HID. The communication protocol is defined in IBM System/360 and System/370 I/O Interface Channel to Control Unit Original Equipment Manufacturers' Information and in IBM System/370 Principles of Operation. The HID also supports the International Standards Organization (ISO) 9314 FDDI protocols for data transmission with the LAN Application Processors (AP).

b. Network Systems Manager (NSM). The NSM contains the network management software used to monitor and manage the hardware and software applications resident on the HNL. The NSM computer system is also used to access other applications resident on the HNL in order to perform functions such as adaptation changes.

c. Network Router. The Network Router allows for the accomplishment of the primary task of routing packets through Serial, FDDI, and Ethernet interfaces. It is capable of handling X.25, Transmission Control Protocol/Internet Protocol (TCP/IP) protocol suite, and other protocols.

d. FDDI Concentrator. The FDDI Concentrators provide for a more fault tolerant LAN. Each HID and LAN APs are "dual homed" in that each processor is connected to two concentrators. In the event of a failure of one concentrator, the data path through the other concentrator is maintained.

67−69. RESERVED.

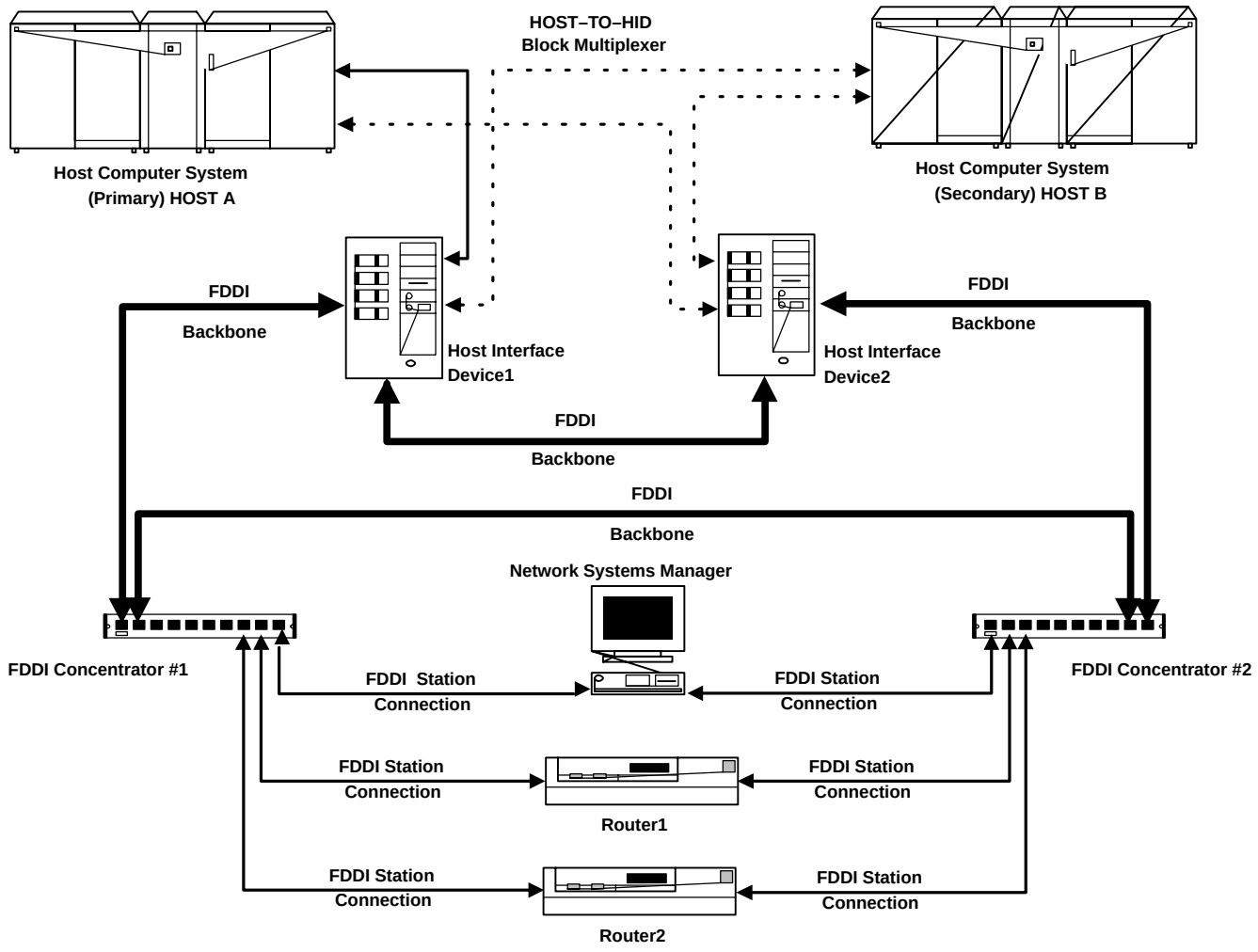

FIGURE 2–18. HNL SYSTEM CONFIGURATION

CHAPTER 3. STANDARDS AND TOLERANCES

70. GENERAL.

a. This chapter prescribes the standards and tolerances for NAS En Route Stage A, Air Traffic Control System, as defined and described in the latest edition of Order 6000.15. All key performance parameters and/or key inspection elements are clearly identified by an arrow placed to the left of the applicable item.

b. Definitions of standard, initial tolerance and operating tolerance for the purpose of this handbook are as follows:

(1) Standard. The optimum value assigned to an essential parameter of the system.

(2) Initial Tolerance. The maximum deviation, from the standard value of the parameter, which is permissible at the time of initial tuneup or a major readjustment.

(3) Operating Tolerance. The maximum deviation, from the standard value of the parameter, beyond which remedial action by maintenance personnel is mandatory.

NOTES: Regarding Radar Tolerances:

Collimation of search to beacon data requires that the beacon offset (1/2 mile delay) be active, or the digitizer type be a CD−1.

Search data is no longer separated into Log/Normal and MTI categories. If a search problem is evident, further analysis with the HCS off-line radar programs is required.

Certain radar/digitizer combinations require special adaptation in order for the QARS program to correctly calculate failures. See FAA−2000, MDM Monitor Handbook, for assistance in properly adapting radar sites for QARS.

Section 1. COMPOSITE FLIGHT DATA PROCESSING (CFAD) SERVICE

Parameter	*Reference Paragraph*	*Standard*	*Tolerance/Limit*	
			Initial	*Operating*
71. FDP AUTOMATION SERVICE.				
→ **a. Flight Data ..... Processing Capability.**	507, 518, and 527	Satisfactory overall FDP automation system operation including: Flight data processing and storage using online or offline certification programs or manual entry checking techniques.	None	None
→ **b. FDP Input/Output .....**	507, 518, and 527	Satisfactory system displays and printouts using online or offline certification programs or manual entry alternate techniques as necessary.	None	None

Section 2. COMPOSITE RADAR DATA PROCESSING (CRAD) SERVICE

Parameter	*Reference Paragraph*	*Standard*	*Tolerance/Limit*	
			Initial	*Operating*
72. RADAR DATA PROCESSING (RDP) AUTOMATION SERVICE.				
→ **a. Narrowband Site ..... Coverage.**	507, 516, 527, and FAA–4306M, FAA–4306U	Satisfactory coverage as determined using the operational program or offline support program(s) such as RSCANS, RARRE, QARS as needed.	None	None
→ **b. Range and ..... Azimuth Accuracy.**	507, 517, 522, 523, and 527	Site registration with no corrections applied to either site. OR Search and beacon PE coordinates within ± 1/8 nmi and ± 2 ACPs. This may be verified by the target symbol appearing within the adapted GMLSDA map box for the PE. OR Radar system with no available search PEs, utilizes beacon PEs with same tolerance as stated above and a search reinforce value greater than 80%.	None	None

Section 2. COMPOSITE RADAR DATA PROCESSING (CRAD) SERVICE (Continued)

Parameter	*Reference Paragraph*	*Standard*	*Tolerance/Limit*	
			Initial	*Operating*
→ **c. Display Accuracy**	507, 511, and 527	Digitizer RTQCs or PEs appear within ± 1/8 nmi and ± 2 ACPs of their proper locations. This may be verified by their appearance within their respective GMLSDA map boxes.	None	None
→ **d. RDP and Tracking**	507, 524, and 527	Successful RDP tracking as verified using online or offline certification programs or manual entry alternate techniques as necessary.	None	None
→ **e. Data Display and Entry.**	507, 511, and 527	Satisfactory display of all class types of data and normal entry and control from the radar console using applicable test pattern(s).	None	None
→ **f. Video Presentation**	507, 511, 524, and 527	Operationally satisfactory symbology, data blocks, lists and general presentation quality.	None	None
→ **g. System Error Detection Analysis, and Correction Capability.**	507 and 527	Successful system error detection, analysis and correction as verified using online or offline certification programs or manual checking techniques.	None	None

Section 2. COMPOSITE RADAR DATA PROCESSING (CRAD) SERVICE (Continued)

Parameter	Reference Paragraph	Standard	Tolerance/Limit	
			Initial	Operating
→ **h. Radar Data Transfer.**	507, 526, and 527	Satisfactory system operation (absence of RTQC error printouts during program operation).	None	None
i. ARTS–NAS Registration.	528 and FAA–4306R			
(1) Total environment mean position error (Z).		Within 0.40 nautical miles (nmi)	None	None
(2) Hemisphere mean position error.		Within 0.50 nmi.	None	None
(3) Total environment 95 percentile class interval (95% Z).		Within 0.75 nmi.	None	None
j. Quick Analysis of Radar Sites (QARS).				
(1) Offline QARS	526			
(a) BEACON.				
BLIP/SCAN		99%	99% minimum	96% minimum
SCH–REINFOR.				
ARSR–4		85%	85% minimum	80% minimum
ARSR–1/2/3		70%	70% minimum	60% minimum
Other		60%	60% minimum	50% minimum

NOTE: Those systems using longer Beacon range than Search range shall be computed using the Search range as maximum range.

COLLIM PCT.				
ARSR–4		95%	95% minimum	90% minimum
ARSR–1/2/3		85%	85% minimum	80% minimum
Other		75%	75% minimum	70% minimum
AZ–SPLIT.				
Other		0.1%	0.1% maximum	0.2% maximum

Section 2. COMPOSITE RADAR DATA PROCESSING (CRAD) SERVICE (Continued)

Parameter	*Reference Paragraph*	*Standard*	*Tolerance/Limit*	
			Initial	*Operating*
RNG–SPLIT.				
ARSR–1/2/3/4		0.1%	0.1% maximum	0.2% maximum
Other		0.2%	0.2% maximum	0.4% maximum
RING–AROUND ...		0.0%	0.0% maximum	0.5% maximum
REFLECTIONS		0.0%	0.0% maximum	0.2% maximum
CODE ZEROS		0.1%	0.1% maximum	0.5% maximum
MODE 3/A REL		99%	99% minimum	98% minimum
MODE 3/A VAL		99%	99% minimum	98% minimum
MODE C REL.				
3,2,3,C		98%	98% minimum	97% minimum
Other		99%	99% minimum	98% minimum
MODE C VAL.				
3,2,3,C		96%	96% minimum	95% minimum
Other		98%	98% minimum	97% minimum
RNG DEV		0 nmi	0 nmi	1/8 nmi
AZ DEV.				
ARSR–3 Non		0	0	2.5 ACPs
RIVDIP				
ASR (RE)		1	1	3 ACPs
Formatted.				
Other.		0	0	2 ACPs
(b) SEARCH.				
BLIP/SCAN.				
ARSR–4		95%	95% minimum	92% minimum
Other		80%	80% minimum	75% minimum
AZ–SPLIT		0.1%	0.1% maximum	0.2% maximum
RNG–SPLIT.				
ARSR–1/2/3/4		1%	1% maximum	2% maximum
Other		3%	3% maximum	6% maximum

Section 2. COMPOSITE RADAR DATA PROCESSING (CRAD) SERVICE (Continued)

Parameter	*Reference Paragraph*	*Standard*	*Tolerance/Limit*	
			Initial	*Operating*
(c) COLLIMATION.				
RNG ERR		0.2 μs	0.4 μs maximum	0.4 μs maximum
AZ ERR		1 ACP	2 ACPs maximum	2 ACPs maximum
(d) BEACON PE VERIFICATION (#1 thru #4 as adapted).				
RNG ERROR		0 nmi	0 nmi	1/8 nmi
AZ ERROR		0 ACP	0 ACPs maximum	2 ACPs maximum
PCT REL		95%	95% minimum	90% minimum
(2) Online QARS	NASP−9291			

NOTE: The Online QARS function remains a viable tool for use in obtaining a "quick-look' of how a site is performing. The intent of removing the Standards and Tolerances is because Online QARS only looks at a maximum of 10 scans of data — this is an insufficient sample size upon which to base the certification or decertification of a radar site.

Section 3. RESERVED

Parameter	*Reference Paragraph*	*Standard*	*Tolerance/Limit*	
			Initial	*Operating*
73. RESERVED.				

Section 4. AIR TRAFFIC CONTROL COMPUTER (ATCC) SYSTEM

Parameter	Reference Paragraph	Standard	Tolerance/Limit	
			Initial	Operating
74. AIR TRAFFIC CONTROL COMPUTER (ATCC) SYSTEM.				
→ **a. CCCH Subsystem**	509d	Satisfactory data processing and control for ATCC system using on-line certification programs.	None	None
→ **b. KVDT Subsystem**	509c	Satisfactory message entry and printing of flight data as verified using online or offline certification programs, NAS TD messages, or SCOPE.	None	None
→ **c. CTS Subsystem**	509c and FAA−4313	Satisfactory time information provided to the CCCH by the CTS as verified using SCOPE.	None	None
→ **d. CUE Subsystem**	509c	Satisfactory transfer of data between CCCH and CRD and data inputs to CCCH from A to D positions.	None	None
(1) Non-Radar ..... Keyboard Multiplexer (NRKM).	CDC/CUE NRKM Instruction Book, Vol. II, Section 7			
(a) NRKM Power Supplies (PSs).				
→ **1** +5 volt dc ..... (TP−1 to TP−3).		5.4 V	±0.01 V	±0.10 V
→ **2** +8 volt dc ..... (TP−6 to TP−8).		8.24 V	±0.66 V	±0.66 V

Section 4. AIR TRAFFIC CONTROL COMPUTER (ATCC) SYSTEM (Continued)

Parameter	Reference Paragraph	Standard	Tolerance/Limit	
			Initial	*Operating*
→ **3** −8 volt dc ..... (TP−9 to TP−8).		−8.24 V	±0.66 V	±0.66 V
→ **4** +11 volt dc .... (TP−4 to TP−8).		11.33 V	±0.91 V	±0.91 V
→ **5** +5 volt dc ..... (Logic PS) (TP−1 to TP−2).		5.10 V	±0.15 V	±0.15 V
→ **6** +100 volt ..... dc (N1 TP−1 to TP−2, N2 TP−3 to TP−4).		95.00 V	+9.5, −4.75 V	+9.5, −4.75 V
7 120/208 volt ac (converter).				
(01 to 02)		208 V ac	±20.8 V ac	±20.8 V ac
(01 to 03)		208 V ac	±20.8 V ac	±20.8 V ac
(02 to 03)		208 V ac	±20.8 V ac	±20.8 V ac
→ **8** Memory Power Supply.				
+5 volt dc ..... (TP−1).		5.35 V	±0.05 V	±0.05 V
(b) Alternating Current Power Monitor Supply.				
1 +28 volt ..... dc (A4 Pin 20).		28 V	±2.8 V	±2.8 V
2 +12 volt ..... dc (A4 Pin 23).		12 V	±1.2 V	±1.2 V
3 −6 volt ..... dc (A4 Pin 24).		−6 V	±0.6 V	±0.6 V
4 +5 volt ..... dc (A4 Pin 21).		5 V	±0.25 V	±0.25 V
5 −12 volt ..... dc (A2 Pin 10).		−12 V	±1.2 V	±1.2 V

Section 4. AIR TRAFFIC CONTROL COMPUTER (ATCC) SYSTEM (Continued)

Parameter	Reference Paragraph	Standard	Tolerance/Limit	
			Initial	*Operating*
6 −28 volt ..... dc (A2 Pin 7).		−28 V	±2.8 V	±2.8 V
7 +14 volt ..... dc (A1 Pin 15).		14 V	±1.4 V	±1.4 V
8 +14 volt ..... dc (A1 Pin 31).		14 V	±1.4 V	±1.4 V
9 Ripple (all ..... supplies).		Less than 200 m V peak-to-peak	Same as standard	Same as standard
→ **(c)** 16 MHz Clock ..... Crystal Frequency.		16.069820 MHz	±10 kHz	±10 kHz
(d) Common Logic Unit Power Supply (TP−2 Common).				
1 +5 volt ..... dc (TP−4).		5 V	±0.15 V	±0.15 V
2 +8 volt ..... dc (TP−3).		8 V	±0.24 V	±0.24 V
3 −8 volt ..... dc (TP−1).		−8 V	±0.24 V	±0.24 V
4 +24 volt ..... dc (TP−5).		24 V	±0.72 V	±0.72 V
(2) Computer Readout ..... Device.	CDC/CUE Non-Radar Position Readout Display (NRCRD), Instruction Book, Vol. II, Section 7			
(a) Computer Readout Display Power Supplies.				
1 +22 volt ..... dc (TP−1).		22 V	±2.2 V	±2.2 V
2 −22 volt ..... dc (TP−3).		−22 V	±2.2 V	±2.2 V
3 +100 volt ..... dc (TP−4).		100 V	±10.0 V	±10.0 V

Section 4. AIR TRAFFIC CONTROL COMPUTER (ATCC) SYSTEM (Continued)

Parameter	Reference Paragraph	Standard	Tolerance/Limit	
			Initial	*Operating*
4 +500 volt ..... dc (TB−1, 6−7).		500 V	±25.0 V	±25.0 V
5 +1200 volt ..... dc (TB−1, 8−7).		−1200 V	±120.0 V	±120.0 V
6 +12 kilovolt .... dc.		12 kV	±1.2 kV	±1.2 kV
→ **e. IFDS Subsystem .....** (Center-to-Center and Center-to-ARTS).	509c, and FEMM and Multiprocessing Diagnostic Monitor (MDM) Manual	Satisfactory transfer of data using online or offline certification programs, TR/TD messages or SCOPE (internal loop-around).	None	None
(1) Paradyne modems	Order 6170.10			
(2) CODEX modems	Order 6170.10			
→ **f. FDIO Subsystem .....**	509c and FAA−4002	Satisfactory input/output, and transfer of flight data between remote site and ARTCC controller position, including correct device response, registration and print quality, as verified using online or offline certification programs, NAS TD messages, or SCOPE.	None	None
(1) Central Control ..... Unit (CCU).	TI 6130.6			
(a) +5 Volt Power .... Supply.		5.0 V	±0.01 V	±0.10 V
(b) +12 Volt Power ... Supply.		12.0 V	±0.06 V	±0.6 V

Section 4. AIR TRAFFIC CONTROL COMPUTER (ATCC) SYSTEM (Continued)

Parameter	*Reference Paragraph*	*Standard*	*Tolerance/Limit*	
			Initial	*Operating*
(c) −12 Volt Power ... Supply.		−12.0 V	±0.06 V	±0.6 V
(d) Maximum ripple ... voltage at power supply.		0.25 V peak-to-peak	−−−	−−−
(2) Printer Control ..... Unit (PCU).	TI 6130.6			
(a) +5 Volt Power .... Supply.		5.0 V	±0.01 V	±0.10 V
(b) Maximum ripple ... voltage at power supply.		0.25 V peak-to-peak	−−−	−−−
(3) Remote Control ..... Unit (RCU).	TI 6130.6			
(a) +5 Volt Power .... Supply.		5.0 V	±0.01 V	±0.10 V
(b) +12 Volt Power .. Supply.		12.0 V	±0.06 V	±0.6 V
(c) −12 Volt ..... Power Supply.		−12.0 V	±0.06 V	±0.6 V
(d) Maximum ..... ripple voltage at power supply.		0.25 V peak-to-peak	−−−	−−−

Section 4. AIR TRAFFIC CONTROL COMPUTER (ATCC) SYSTEM (Continued)

Parameter	*Reference Paragraph*	*Standard*	*Tolerance/Limit*	
			Initial	*Operating*
g. FSP Subsystem.				
(1) FDIO FSP	509c and FAA−4002	Satisfactory printout of flight strips with correct device response, registration and print quality as verified using the online or offline certification programs, NAS TD messages, or SCOPE.	None	None
(2) DSR FSP	509c and FAA−4319	Satisfactory printout of flight strips with correct device response, registration and print quality as verified using the online or offline certification programs, NAS TD messages, or SCOPE.	None	None

Section 5. CENTRAL COMPUTER COMPLEX HOST (CCCH) SYSTEM

Parameter	Reference Paragraph	Standard	Tolerance/Limit	
			Initial	Operating
75. CENTRAL COMPUTER ... COMPLEX HOST (CCCH) SYSTEM.	510			
→ **a. CCCH Elements .....**	Equipment instruction books and Online Tests (OLTS) users manuals for systems and elements.	Satisfactory operation within the support processor system, with standby NAS, following satisfactory diagnostic testing below.	None	None
→ **(1)** Processor Complex ..... 3083, 3082, 3087, and 3089.		Functional exercise micro code tests T2–T10.		
(2) Processor 9672–RA4–G3.				
(a) 9672 Frame	IBM S/390 Support Element Operations Guide IBM S/390 Installation Manual IBM S/390 Service Guide	Successful completion of POST and the Checkout Tests.		
1 Central ..... Processor (CP).		2	1	1
2 Memory		512M	256M	256M
3 Parallel ..... Channels.		18	16	16
4 ESCON ..... Channels.		4	1	1
(b) 9672 Support ..... Element (SE).	IBM S/390 Support Element Operations Guide IBM S/390 Installation Manual	Successful completion of POST.	None	None

Section 5. CENTRAL COMPUTER COMPLEX HOST (CCCH) SYSTEM (Continued)

Parameter	Reference Paragraph	Standard	Tolerance/Limit	
			Initial	*Operating*
(c) Hardware Management Console (HMC).	IBM S/390 Hardware Management Console Operations Guide IBM S/390 Installation Manual	Successful completion of POST.	None	None
→ **(3)** 3880 Storage Control		OLTS T3880A		
→ **(4)** 3380 Direct Access Storage.		OLTS T3380PSA and T3380PSB		
→ **(5)** 3803 Tape Control Unit.		OLTS T3420D		
(6) 3420 Magnetic Tape Unit.		OLTS T3420E		
→ **(7)** 3480 Cartridge Tape Control Unit.		OLTS T3480A		
→ **(8)** 3480 Cartridge Tape Unit.		OLTS T3480C		
→ **(9)** 3274 Terminal Control Unit.		OLTS T3274A		
→ **(10)** Adapter Unit (AU)	PAMRI Hardware Technical Manual			
(a) Power Supply Voltages.				
1 5 V supply	Par. 6.4.1a	5.00 V	±0.1 V	±0.1 V
2 12 V supply	Par. 6.4.1a	12.00 V	±0.2 V	±0.2 V
3 −12 V supply	Par. 6.4.1a	−12.00 V	±0.2 V	±0.2 V
4 Maximum ripple.	Par. 6.4.1a	25 mV peak-to-peak	50 mV peak-to-peak	50 mV peak-to-peak
→ **(b)** Firmware Diagnostic Tests.	Par. 11.1			
1 IOP all test except 42.	Par. 11.1.1	Error free	Same as standard	Same as standard
2 IOA Serial all tests except 7, 20, 35, 36, and 37.	Par. 11.1.3	Error free	Same as standard	Same as standard
3 IOA Parallel all tests except 7, 20, 32, 33, 34, and 37.	Par. 11.1.4	Error free	Same as standard	Same as standard

Section 5. CENTRAL COMPUTER COMPLEX HOST (CCCH) SYSTEM (Continued)

Parameter	Reference Paragraph	Standard	Tolerance/Limit	
			Initial	*Operating*
4 FV3710	Par. 11.1.5	Error free	Same as standard	Same as standard
→ **(c)** MDM DCC51	FAA 2373	Error free	Same as standard	Same as standard
(11) 3814 Switching Unit.				
(a) Peripheral ..... Interface Switch.		OLTS T3274A		
(b) Display Channel ... Interface Switch.		MDM 71C2		
(12) 3725 Communication ... Controller.	OLTS T3725AA–AN			
b. Host Interface Device ... (HID) IBM RS/6000 Model C–20.	HNL Maintenance Handbook Order 6031			
→ **(1)** Power On Self Test .... (POST)		Error free completion	Same as standard	Same as initial
(2) Server Diagnostics		Error free completion	Same as standard	Same as initial
(3) Multiprogramming..... Diagnostic Monitor (MDM).	FAA–4321	Error free completion	Same as standard	Same as initial
(a) Section 1, D7851000.				
(b) Section 2, D7852000.				
(c) Section 3, D7853000.				
c. DSR Printer Control Unit.				
(1) Processor embedded .... diagnostics, including Built-in Self Test (BIST) and POST.	TI 6160.53 Rack Mounted Components Hardware Technical Manual, ref: Section 7	Successful completion of the POST diagnostics.	None	None
		AND:		
(2) MDM D7951.	FAA–4319	Error Free	Same as standard	Same as standard

Section 6. RADAR DATA ENTRY AND DISPLAY (RDED) SUBSYSTEM (CDC–SITE DEPENDENT)

Parameter	*Reference Paragraph*	*Standard*	*Tolerance/Limit*	
			Initial	*Operating*
76. RADAR DATA ENTRY AND DISPLAY (RDED) SUBSYSTEM (CDC).				
→ **a. Processing and ..... Display of Radar Data.**	509e and FAA–4002	Satisfactory display of radar data on the PVD using the online or offline certification programs, the NSU CDC program, or the enhanced online test pattern, or SCOPE.	None	None
→ **b. Entry, Processing ..... and Display of Data (CED/CRD).**	509e and FAA–4002	Satisfactory entry and display of flight data using the online or offline certification programs, the NSU CDC program, the enhanced online test pattern, or SCOPE.	None	None
→ **c. CDC System ..... Reconfiguration.**	509e and FAA–4002	Successful reconfigurations and startovers using the online or offline certification programs, CDC NSU or SCOPE.	None	None

Section 7. COMPUTER DISPLAY CHANNEL (CDC) SYSTEM

Parameter	Reference Paragraph	Standard	Tolerance/Limit	
			Initial	Operating
77. COMPUTER DISPLAY CHANNEL (CDC) SYSTEM.				
→ **a. CDC System**	510, Offline Maintenance (OLM), MDM, and Test Cart Users Manual	Satisfactory display channel processing using the online or offline certification programs following diagnostic testing par. 77b below.	None	None
→ **b. CDC Elements.**				
→ **(1)** IOC, CP, BM	OLM User's Manual	Satisfactory IOC, CP, and BM operation using the offline maintenance program IOC, CP, and BM unit tests.	None	None
→ **(2)** Refresh Subsystem	OLM User's Manual	Satisfactory operation of the refresh subsystem using the offline maintenance program refresh subsystem test (RSST) routines.	None	None
→ **(3)** Radar Data ..... Display, Control, and Video Presentation.	OLM User's Manual	Satisfactory display, display control and data entry at the radar consoles using the PVD routines of the offline maintenance program.	None	None

Section 7. COMPUTER DISPLAY CHANNEL (CDC) SYSTEM (Continued)

Parameter	Reference Paragraph	Standard	Tolerance/Limit	
			Initial	*Operating*
→ **(4)** CCM	Test Cart User's Manual	Satisfactory fault sensing and automatic reconfiguration using the CCM unit test of the test cart program.	None	None
c. CDC Equipment.				
(1) Logic Power ..... Supplies (IOC, CP, HSF, RMC, RMIOC, RKM, and CCM).	Procedures related to the criteria in the subparagraphs that follow are contained in sections 6 and 7 of the CDC System Instruction Book, Vol. II, issued by EEM 6160.1, Chap 263 (latest version).			
→ **(a)** Logic Power ..... Supply Output Voltages.		5.20 V	±0.01 V	±0.10 V
(b) Overvoltage at ..... Set Point.		5.45 V	±0.01 V	±0.10 V
(c) Output Voltage .... Upper Limit.		5.50 V	−−	−−
(d) Output Voltage .... Lower Limit.		4.90 V	−−	−−
(e) Minimum Voltage .. at Logic Panel.		5.00 V	4.95 V	4.90 V
→ **(f)** Maximum Ripple .. Voltage at Supply		0.25 V peak-to-peak	−−	−−
(2) I/O and Logic Power Supplies (RM).				
(a) +5 Volt Power Supply.				

Section 7. COMPUTER DISPLAY CHANNEL (CDC) SYSTEM (Continued)

Parameter	Reference Paragraph	Standard	Tolerance/Limit	
			Initial	*Operating*
→ **1** Output..... voltage at cabinet test points.		5.30 V	±0.01 V	±0.10 V
2 Overvoltage .... set point.		5.55 V	±0.01 V	±0.10 V
3 Output..... voltage upper limit.		5.60 V	––	––
4 Output..... voltage lower limit.		5.10 V	––	––
5 Maximum ..... output voltage at power supply test points when output at cabinet test points is set to initial value.		5.60 V	––	––
6 Minimum ..... voltage at logic panel.		4.90 V	––	––
→ **7** Maximum ..... ripple voltage at supply.		0.25 V peak-to-peak	––	––
(b) +8 Volt Power Supply.				
→ **1** Output..... voltage at cabinet test points.		8.10 V	±0.01 V	±0.10 V
2 Overvoltage .... set point.		8.40 V	±0.01 V	±0.10 V
3 Output..... voltage upper limit.		8.5 V	––	––
4 Output..... voltage lower limit.		7.8 V	––	––

Section 7. COMPUTER DISPLAY CHANNEL (CDC) SYSTEM (Continued)

Parameter	Reference Paragraph	Standard	Tolerance/Limit	
			Initial	Operating
→ **5** Maximum ..... output voltage at power supply test points when output at cabinet test points is set to initial value.		8.3 V	−−	−−
6 Maximum ..... ripple voltage at supply.		0.25 V peak-to-peak	−−	−−
→ **(c)** −8 Volt Power .... Supply.		Absolute values must track PLUS 8 VOLT POWER SUPPLY within ±0.5 volt.	−−	−−
(3) Logic Power Supply (DG).				
→ **(a)** Logic Power ..... Supply Output Voltage.		5.40 V	±0.01 V	±0.10 V
(b) Output Voltage .... Upper Limit.		5.50 V	−−	−−
(c) Output Voltage .... Lower Limit.		4.90 V	−−	−−
(d) Minimum Voltage .. at DCVGs.		5.00 V	4.95 V	4.90 V
→ **(e)** Maximum Ripple .. Voltage at Supply.		0.25 V peak-to-peak	−−	−−
(4) I/O Power Supplies (IOC, CP, HSF, RMC, RMIOC, ERC, RKM, and CCM).				
(a) +5 Volt Power Supply.				
→ **1** Output..... voltage at cabinet test points. Both power supplies operating.		5.20 V	±0.01 V	±0.10 V

Section 7. COMPUTER DISPLAY CHANNEL (CDC) SYSTEM (Continued)

	Parameter	Reference Paragraph	Standard	Tolerance/Limit	
				Initial	Operating
	2 Overvoltage set point at cabinet test points.		5.30 V	±0.01 V	±0.10 V
	3 Output voltage upper limit at cabinet test points.		5.50 V	−−	−−
	4 Output voltage lower limit at cabinet test points.		5.00 V	−−	−−
	5 Total distribution drop with both power supplies sharing the load.		0.00 V	0.25 V	0.38 V
	6 Total distribution drop with one power supply turned OFF.		0.00 V	0.50 V	Same as initial
	7 Maximum output voltage at power supply when output at cabinet test points is set to initial value.		5.58 V	−−	−−
	8 Differential diode drop (measure of power supply balance or load sharing).		0.00 V	±0.02 V	±0.02 V
→	**9** Maximum ripple voltage at supply.		0.25 V peak-to-peak	−−	−−
	(b) −5 Volt Power Supply.				
→	**1** Output voltage at cabinet test points. Both power supplies operating.		−5.20 V	±0.01 V	±0.10 V

Section 7. COMPUTER DISPLAY CHANNEL (CDC) SYSTEM (Continued)

Parameter	Reference Paragraph	Standard	Tolerance/Limit	
			Initial	Operating
2 Overvoltage .... set point at cabinet test points.		−5.30 V	±0.01 V	±0.10 V
3 Output..... voltage upper limit at cabinet test points.		−5.00 V	−−	−−
4 Output..... voltage lower limit at cabinet test points.		−5.50 V	−−	−−
5 Total ..... distribution drop with one power supply turned OFF.		0.00 V	0.40 V	Same as initial
6 Total ..... distribution drop with both power supplies sharing the load.		0.00 V	0.25 V	0.32 V
7 Maximum ..... output voltage at power supply when output at cabinet test points is set to initial value.		−5.50 V	−−	−−
8 Differential..... diode drop (measure of power supply balance or load sharing).		0.00 V	±0.02 V	±0.04 V
→ **9** Maximum ..... ripple voltage at supply.		0.25 V peak-to-peak	−−	−−
(c) +8 Volt Power Supply.				
→ **1** Output..... voltage at cabinet test points. Both power supplies operating.		8.1 V	±0.04 V	±0.10 V

Section 7. COMPUTER DISPLAY CHANNEL (CDC) SYSTEM (Continued)

Parameter	Reference Paragraph	Standard	Tolerance/Limit	
			Initial	*Operating*
2 Overvoltage .... set point.		8.35 V	±0.01 V	±0.10 V
3 Output..... voltage upper limit at cabinet test points.		8.5 V	−−	−−
4 Output..... voltage lower limit at cabinet test points.		7.8 V	−−	−−
5 Total ..... distribution drop with both power supplies sharing the load.		0.00 V	0.17 V	0.20 V
6 Total ..... distribution drop with one power supply turned OFF.		0.00 V	0.30 V	Same as initial
7 Maximum ..... output voltage at power supply when output at cabinet test points is set to initial value.		8.3 V	−−	−−
8 Differential..... diode drop (measure of power supply balance or load sharing).		0.00 V	±0.02 V	±0.04 V
→ **9** Maximum ..... ripple voltage at supply.		0.25 V peak-to-peak	−−	−−
(d) −8 Volt Power .... Supply.		The absolute voltage for this power supply must track the PLUS 8 VOLT POWER SUPPLY within ±0.5 volt.		

Section 7. COMPUTER DISPLAY CHANNEL (CDC) SYSTEM (Continued)

Parameter	Reference Paragraph	Standard	Tolerance/Limit	
			Initial	Operating
(5) I/O Power Supplies ..... (DG).	Display Generator (DG) Instruction Book			
(a) +5 Volt Power Supply.				
→ **1** Output..... voltage at I/O cart test points (A8A3E2 to E1). Both supplies operating.		5.00 V	±0.01 V	±0.10 V
2 Overvoltage .... set point at I/O card test points (A8A3E2 to E1).		5.10 V	±0.01 V	±0.10 V
3 Output..... voltage upper limit at I/O card test points (A8A3E2 to E1).		5.25 V	––	––
4 Output..... voltage lower limit at I/O card test points (A8A3E2 to E1).		4.75 V	––	––
5 Total ..... distribution drop with both supplies sharing the load.		0.0 V	0.9 V	1.0 V
6 Total ..... distribution drop with one power supply turned OFF.		0.0 V	0.9 V	1.0 V
7 Maximum ..... voltage at power supply when output at I/O card test points (A8A3E2 to E1) is set to initial value.		6.0 V	––	––

Section 7. COMPUTER DISPLAY CHANNEL (CDC) SYSTEM (Continued)

Parameter	Reference Paragraph	Standard	Tolerance/Limit	
			Initial	Operating
8 Differential ..... current (measure of power supply balance or load sharing).		0.0 A	3.0 A	6.0 A
→ **9** Maximum ..... ripple voltage at supply.		0.25 V peak-to-peak	−−	−−
(b) +8 Volt Power Supply.				
→ **1** Output ..... voltage at cabinet test points. Both power supplies operating.		8.1 V	±0.04 V	±0.1 V
2 Overvoltage .... set point at cabinet test points.		8.35 V	±0.01 V	±0.10 V
3 Output ..... voltage upper limit at cabinet test points.		8.5 V	−−	−−
4 Output ..... voltage lower limit at cabinet test points.		7.8 V	−−	−−
5 Total ..... distribution drop with both power supplies sharing the load.		0.00 V	0.17 V	0.20 V
6 Total ..... distribution drop with one power supply turned OFF.		0.00 V	0.30 V	0.30 V
7 Maximum ..... voltage at power supply when output at cabinet test points is set to initial value.		8.3 V	−−	−−

Section 7. COMPUTER DISPLAY CHANNEL (CDC) SYSTEM (Continued)

Parameter	Reference Paragraph	Standard	Tolerance/Limit	
			Initial	Operating
8 Differential diode drop (measure of power supply balance or load sharing).		0.00 V	±0.02 V	±0.04 V
→ **9** Maximum ripple voltage at supply.		0.25 V peak-to-peak	−−	−−
(c) −8 Volt Power Supply.		The absolute voltage for this power supply must track the PLUS 8 VOLT POWER SUPPLY within ±0.5 volt.		
(6) User-Clock Power Supplies (IOC, CP, HSF and RMIOC).				
→ **(a)** Output Voltage at Power Supply (TP1 and TP2).		17.50 V	±0.05 V	±0.40 V
(b) Overvoltage Set Point.		17.75 V	±0.05 V	±0.10 V
(c) Output Voltage Upper Limit.		19.4 V	−−	−−
(d) Output Voltage Lower Limit.		16.6 V	−−	−−
→ **(e)** Maximum Ripple Voltage at Power Supply.		0.25 V peak-to-peak	−−	−−
(7) Memory Power Supplies (BM, RM, and RKM).				
(a) +5 Volt Power Supply.				
1 Output voltage at power supply test points.		5.00 V	±0.02 V	±0.25 V

Section 7. COMPUTER DISPLAY CHANNEL (CDC) SYSTEM (Continued)

Parameter	*Reference Paragraph*	*Standard*	*Tolerance/Limit*	
			Initial	*Operating*
2 Output voltage upper limit.		5.25 V	––	––
3 Output voltage lower limit.		4.75 V	––	––
4 Maximum ripple voltage at power supply.		0.25 V peak-to-peak	––	––
(b) +12 Volt Power Supply.				
1 Output voltage at power supply test points.		12.00 V	±0.06 V	±0.60 V
2 Output voltage upper limit.		13.50 V	––	––
3 Output voltage lower limit.		10.50 V	––	––
4 Maximum ripple voltage at power supply.		0.25 V peak-to-peak	––	––
(c) −12 Volt Power Supply.				
1 Output voltage at power supply test points.		−12.00 V	±0.06 V	±0.60 V
2 Output voltage upper limit.		−10.50 V	––	––
3 Output voltage lower limit.		−13.50 V	––	––
4 Maximum ripple voltage at power supply.		0.25 V peak-to-peak	––	––

Section 7. COMPUTER DISPLAY CHANNEL (CDC) SYSTEM (Continued)

Parameter	Reference Paragraph	Standard	Tolerance/Limit	
			Initial	Operating
(d) −15 Volt Power Supply.				
1 Output ..... voltage at power supply test points.		−15.00 V	±0.02 V	±0.60 V
2 Output ..... voltage upper limit.		−14.00 V	−−	−−
3 Output ..... voltage lower limit.		−16.00 V	−−	−−
4 Maximum ..... ripple voltage at power supply.		0.25 V peak-to-peak	−−	−−
(8) I/O and Logic Power Supplies (BM).				
(a) +5 Volt Power Supply.				
→ **1** Output ..... voltage at power supply test points. Both power supplies operating.		5.35 V	±0.01 V	±0.10 V
2 Overvoltage .... set point at cabinet test points.		5.60 V	±0.01 V	±0.10 V
3 Output ..... voltage upper limit at cabinet test points.		5.65 V	−−	−−
4 Output ..... voltage lower limit at cabinet test points.		5.15 V	−−	−−
5 Total ..... distribution drop with both power supplies sharing the load.		0.00 V	0.20 V	0.30 V

Section 7. COMPUTER DISPLAY CHANNEL (CDC) SYSTEM (Continued)

Parameter	Reference Paragraph	Standard	Tolerance/Limit	
			Initial	*Operating*
6 Total distribution drop with one power supply turned OFF.		0.00 V	0.40 V	Same as initial
7 Maximum output voltage at power supply test points when output at cabinet test points is set to initial value.		5.65 V	−−	−−
8 Voltage at logic panel.		5.00 V	±0.05 V	±0.10 V
9 Voltage at I/O basket.		5.00 V	+0.20 V −0.05 V	+0.25 V −0.10 V
→ **10** Maximum ripple voltage at power supply.		0.25 V peak-to-peak	−−	−−
11 Differential diode drop (measure of power supply balance or load sharing).		0.00 V	±0.02 V	±0.04 V
(b) −5 Volt Power Supply.				
→ **1** Output voltage at cabinet test points. Both power supplies operating.		−5.2 V	±0.01 V	±0.10 V
2 Overvoltage set point at cabinet test points.		5.30 V	±0.01 V	±0.10 V
3 Output voltage upper limit at cabinet test points.		−5.00 V	−−	−−

Section 7. COMPUTER DISPLAY CHANNEL (CDC) SYSTEM (Continued)

Parameter	Reference Paragraph	Standard	Tolerance/Limit	
			Initial	*Operating*
4 Output voltage lower limit at cabinet test points.		−5.50 V	−−	−−
5 Total distribution drop with both power supplies sharing the load.		0.00 V	0.20 V	0.30 V
6 Total distribution drop with one power supply turned OFF.		0.00 V	0.40 V	Same as initial
7 Maximum output voltage at power supply when output at cabinet test points is set to initial value.		−5.50 V	−−	−−
8 Differential diode drop (measure of power supply balance or load sharing).		0.00 V	±0.02 V	±0.04 V
→ **9** Maximum ripple voltage at power supply.		0.25 V peak-to-peak	−−	−−
(c) +8 Volt Power Supply.				
→ **1** Output voltage at cabinet test points. Both power supplies operating.		8.1 V	±0.04 V	±0.10 V
2 Overvoltage set point at cabinet points.		8.35 V	±0.01 V	±0.10 V
3 Output voltage upper limit at cabinet test points.		8.5 V	−−	−−

Section 7. COMPUTER DISPLAY CHANNEL (CDC) SYSTEM (Continued)

Parameter	Reference Paragraph	Standard	Tolerance/Limit	
			Initial	*Operating*
4 Output voltage lower limit at cabinet test points.		7.8 V	−−	−−
5 Total distribution drop with both power supplies sharing the load.		0.00 V	0.17 V	0.20 V
6 Total distribution drop with one power supply turned OFF.		0.00 V	0.30 V	Same as initial
7 Maximum output voltage at power supply when output at cabinet test points is set to initial value.		8.3 V	−−	−−
8 Differential diode drop (measure of power supply balance or load sharing).		0.00 V	±0.02 V	±0.04 V
→ **9** Maximum ripple voltage at power supply.		0.25 V peak-to-peak	−−	−−
(d) −8 Volt Power Supply.		The absolute voltage for this power supply must track the PLUS 8 VOLT POWER SUPPLY within ±0.5 volt.		
(9) System Timing Signals.				
(a) IOC, BM, and HSF GCB.				
1 Input		12 V peak-to-peak minimum	−−	−−

Section 7. COMPUTER DISPLAY CHANNEL (CDC) SYSTEM (Continued)

Parameter	*Reference Paragraph*	*Standard*	*Tolerance/Limit*	
			Initial	*Operating*
2 Output ..... pulse amplitude.		4.0 V	3.0 V minimum	3.0 V minimum
3 Pulse ..... width.		29 ns	+4, −0 ns	+4, −0 ns
(b) CP GCB.				
1 Input		12 V peak-to-peak minimum	−−	−−
2 Output ..... pulse amplitude.		4.0 V	3.0 V minimum	3.0 V minimum
3 Pulse ..... width.		22 ns	±1 ns	±1 ns
(c) RMIOC GCB.				
1 Input		12 V peak-to-peak minimum	−−	−−
2 Output ..... pulse amplitude.		4.0 V	3.0 V minimum	3.0 V minimum
3 Pulse ..... width.		30 ns	±2 ns	±2 ns
(d) RM GCB.				
1 Input		8 V peak-to-peak minimum	−−	−−
2 Output ..... pulse amplitude.		4.0 V	3.0 V minimum	3.0 V minimum
3 Pulse ..... width.		30 ns	±2 ns	±2 ns
(e) CP Pulse Generator PCB 385059.				
1 Pulse ..... amplitude.		4.0 V	3.0 V minimum	3.0 V minimum
2 Pulse ..... width.		30 ns	±2 ns	±2 ns
3 Pulse ..... delay.		100 ns	±8 ns	±8 ns

Section 7. COMPUTER DISPLAY CHANNEL (CDC) SYSTEM (Continued)

Parameter	*Reference Paragraph*	*Standard*	*Tolerance/Limit*	
			Initial	*Operating*
(f) CP TTY Clock PCB 385043−1.				
1 Pulse ..... amplitude.		4.0 V	3.0 V minimum	3.0 V minimum
2 Frequency.....		110 Hz	±5 Hz	±5 Hz
3 Duty cycle		50%	±5%	±5%
(g) CP Square Wave Oscillator PCB 385046−28.				
1 Pulse ..... amplitude.		4.0 V	3.0 V minimum	3.0 V minimum
2 Frequency.....		3.00 MHz	±100 Hz	±100 Hz
3 Duty cycle		50%	±5%	±5%
(h) RMC Square Wave Oscillator PCB 385046−32.				
1 Pulse ..... amplitude.		4.0 V	3.0 V minimum	3.0 V minimum
2 Frequency.....		13.4 MHz	±670 Hz	±670 Hz
3 Duty cycle ..... (square wave).		50%	±5%	±5%
(i) RKM Square Wave Oscillator PCB 385046−1.				
1 Pulse ..... amplitude.		4.0 V	3.0 V minimum	3.0 V minimum
2 Frequency.....		16.0 MHz	±1600 Hz	±1600 Hz
3 Duty cycle ..... (square wave).		50%	±5%	±5%
(j) CCM Square Wave Oscillator PCB 385046−1.				

Section 7. COMPUTER DISPLAY CHANNEL (CDC) SYSTEM (Continued)

Parameter	*Reference Paragraph*	*Standard*	*Tolerance/Limit*	
			Initial	*Operating*
1 Pulse amplitude.		4.0 V	3.0 V minimum	3.0 V minimum
2 Frequency		16.0 MHz	±1600 Hz	±1600 Hz
3 Duty cycle (square wave).		50%	±5%	±5%
(k) HSF SSPGATE1.				
1 Pulse amplitude.		4.0 V	2.5 V minimum	2.5 V minimum
2 Pulse width		28 ns	±2 ns	±2 ns
3 Delay from SKKC71.		80 ns	±3 ns	±3 ns
(l) RMIOC 8.888 MHz Clock.				
1 Amplitude		40.0 V	±2.0 V	±2.0 V
2 Frequency		8.888 MHz	±88 kHz	±88 kHz
(m) RMIOC Lead/Lag PCB.				
1 Leads 8.888 MHz clock.		10 ns	±5 ns	±5 ns
2 Amplitude		6 V	±1 V	±1 V
3 Lag PCB — lags 8.888 MHz clock.		15 ns	±5 ns	±5 ns
4 Amplitude		6 V	±1 V	±1 V
(n) System Delay Circuits.				
1 Pulse amplitude.		4.0 V	±1.0 V	±1.0 V
2 IOC SUCKHUP		18 ms	±2 ms	±2 ms
3 IOC SMQFHUPS		18 ms	±2 ms	±2 ms

Section 7. COMPUTER DISPLAY CHANNEL (CDC) SYSTEM (Continued)

Parameter	Reference Paragraph	Standard	Tolerance/Limit	
			Initial	Operating
4 IOC ..... SASDLA		2.3 μs	±20 ns	±20 ns
5 IOC ..... SBSDLA		2.3 μs	±20 ns	±20 ns
6 CP ..... SRUBMHUA		18 ms	±2 ms	±2 ms
7 HSF ..... IRUBMHUI		18 ms	±2 ms	±2 ms
8 HSF ..... IRUCFHUI		450 ms	±5 ms	±5 ms
9 HSF ..... IRUCOHUI		500 ms	±5 ms	±5 ms
10 HSF ..... IRURMHUI		450 ms	±5 ms	±5 ms
11 RMC ..... IUSLMCLJR		1.3 μs	±20 ns	±20 ns
12 RMC ..... IIKTIMEB		900 ns	±10 ns	±10 ns
13 RMC ..... IIKTIMEA		400 ns	±10 ns	±10 ns
→ **(o)** DPSS Master clock.				
1 Frequency.				
a 7.5 MHz ..... clock (TP4).		7.5 MHz	±1%	±1%
b 0.833 ..... MHz clock (TP3).		0.833 MHz	±1%	±1%
2 Amplitude.				
7.5 MHz		25 V peak-to-peak	±2 V	±5 V
(10) AC Power Monitor Power Supply, AC Power Monitor.				
(a) 28 Volt ..... regulator output voltage (TP−10).		28.0 V	±1.40 V	±2.80 V

Section 7. COMPUTER DISPLAY CHANNEL (CDC) SYSTEM (Continued)

Parameter	*Reference Paragraph*	*Standard*	*Tolerance/Limit*	
			Initial	*Operating*
(b) 12 Volt ..... regulator output voltage (TP1).		12.0 V	±0.60 V	±1.20 V
(c) Minus 28 Volt ..... regulator output voltage (TP4).		−28.0 V	±1.40 V	±2.80 V
(d) 5 Volt ..... regulator output voltage (TP3).		5.0 V	±0.10 V	±0.25 V
(e) 5 Volt ..... regulator output voltage (TP2).		5.0 V	±0.10 V	±0.25 V
(11) PVD.				
(a) HVPS; A2A14, ... (Table 7−6, Step C).	Procedures for these standards may be found in section 7 Volume II of the PVD Instruction Manual.			
1 +6.3 V[1] ..... (TP5).		+6.3 V	±0.05 V	±0.10 V
2 −150 V (TP6) ..		−150 V	±1.0 V	±2.0 V
3 +800 V (TP4) ..		+800 V	±4.0 V	±10.0 V
4 +3−5 kV ..... (TP3).		+4.4 kV	±25.0 V	±50.0 V
5 +14 kV ..... (TP1).		+14.5 kV	±100.0 V	±200.0 V
6 Ripple; 14 ..... kV.		4.5 V peak-to-peak	Same as standard	Same as standard
7 Ripple; ..... other voltage outputs.		±0.05% peak-to-peak	Same as standard	Same as standard
(b) Analog/Logic PS; A1A2, (Table 7−6, Step A).				

[1] The CRT filament voltage given is for a new CRT. The filament voltage may be increased for aged CRT, in increments of 0.5 volts, up to a maximum of 7.3 volts, as necessary to obtain the required brightness.

Section 7. COMPUTER DISPLAY CHANNEL (CDC) SYSTEM (Continued)

Parameter	Reference Paragraph	Standard	Tolerance/Limit	
			Initial	Operating
1 +5 V (A) ..... (TP1).		+5.00 V	±0.05 V	±0.10 V
2 +5 V (B) ..... (TP2).		+5.50 V	±0.05 V	±0.10 V
3 +8 V (TP3)		+8.00 V	±0.05 V	±0.10 V
4 +15 V (TP4) ...		+15.00 V	±0.075 V	±0.15 V
5 +30 V (TP5) ...		+30.00 V	±0.15 V	±0.3 V
6 +50 V (TP6) ...		+50.00 V	±0.25 V	±0.5 V
7 −15 V (TP7) ...		−15.00 V	±0.075 V	±0.15 V
8 −8 V (TP8)		−8.00 V	±0.05 V	±0.10 V
9 −5.2 V (TP9) ..		−5.20 V	±0.05 V	±0.10 V
10 +24 V (TP12) ..		+24.00 V	±0.1 V	±0.25 V
11 +16 V (TP11) ..		+16.00 V	±0.10 V	±0.20 V
(c) Deflection PS; A1A3, (Table 7−6, Step B).				
1 +15 V (TP2) ...		+15.00 V	±0.075 V	±0.15 V
2 −15 V (TP3) ...		−15.00 V	±0.075 V	±0.15 V
3 −44 V (TP4) ...		−44.00 V	±0.22 V	±0.44 V
4 Ripple.				
+15 V		0.2% peak-to-peak	Same as standard	Same as standard
−15 V		0.2% peak-to-peak	Same as standard	Same as standard
−44 V		1.0 V peak-to-peak	Same as standard	Same as standard
(d) Display Parameters.				
1 Useable ..... display area.		19.25 inch (in)	Same as standard	Same as standard

Section 7. COMPUTER DISPLAY CHANNEL (CDC) SYSTEM (Continued)

Parameter	Reference Paragraph	Standard	Tolerance/Limit	
			Initial	Operating
2 Repetition ..... frequency.		55 Hz for CDC	Same as standard	Same as standard
3 CDC ..... absolute positioning accuracy.		±1%	Same as standard	Same as standard
4 CDC ..... relative positioning accuracy.		±0.1%	Same as standard	Same as standard
5 Character ..... size.		0.25 inch, large	Same as standard	Same as standard
(e) Display Alignment Procedures/Criteria.				
Table 7–6 ..... Alignment Procedures (Steps A thru R).	Procedures for these standards may be found in section 7 Volume II of the PVD Instruction Book.	The method of adjustments results are specified in the adjustment column.	Same as standard	Same as standard
(12) RCRD (FA–7914)	Procedures for standards may be found in RCRD Instruction Book.			
(a) LVPS; A1A4, (Table 7–5, Steps A).				
1 +22 V		+22.0 V	±0.10 V	±0.20 V
2 –22 V		–22.0 V	±0.10 V	±0.20 V
3 +100 V		+100 V	±0.50 V	±1.0 V
(b) HVPS; A2A4A1, (Table 7–5, Step B).				
1 +12 kV ..... (CRT HV Lead).		+12 kV	±100 V	±100 V
2 +500 V ..... (TPI–6,7).		+500 V	±2.5 V	±5.0 V
3 –1200 V		–1200 V	±50 V	±50 V

Section 7. COMPUTER DISPLAY CHANNEL (CDC) SYSTEM (Continued)

Parameter	*Reference Paragraph*	*Standard*	*Tolerance/Limit*	
			Initial	*Operating*
(c) Display Parameters.				
Linearity		Within 3% of full scale deflection.	Same as standard	Same as standard

Section 8. RADAR DATA ENTRY AND DISPLAY (RDED) SUBSYSTEM (DCC)

Parameter	*Reference Paragraph*	*Standard*	*Tolerance/Limit*	
			Initial	*Operating*
78. RADAR DATA ENTRY AND DISPLAY (RDED) SUBSYSTEM (DCC).				
→ **a. Processing and ..... Display of Radar Data on PVD.**	509e and FAA−4426	Satisfactory display of radar data using the online or offline certification programs, the enhanced online test pattern, D98B1, or SCOPE.	None	None
→ **b. Entry, Processing, ... and Display of Data; (CCCH−DED/RCRD).**	509e and FAA−4425	Satisfactory entry and display of flight data using the online or offline certification programs, the enhanced online test pattern, DB8B1, DB8B2, DB8B3, or SCOPE.	None	None
→ **c. DCC System ..... Reconfiguration and Startovers.**	509e and NAS Monitor Manual	Successful reconfigurations and mode startovers using the online or offline certification programs, or manual entries with the NAS operational program, or SCOPE.	None	None

Section 9. DISPLAY CHANNEL COMPLEX (DCC) SYSTEM

Parameter	Reference Paragraph	Standard	Tolerance/Limit	
			Initial	Operating
79. DISPLAY CHANNEL COMPLEX (DCC) SYSTEM.				
→ **a. 9020E System**	510, and FEMM and MDM Manuals for system/elements	Satisfactory display channel processing using the online or offline certification programs, DD8A0 and SEVA (two passes).	None	None
→ **b. 9020E Elements**	FEMM and MDM Manuals for all elements	Satisfactory operation of the elements when configured within at least a simplex system using SEVA (two passes).	None	None
		AND:		
→ **(1)** CE		Satisfactory operation of error circuits using: CE FLT, 13BA, and CE ROS, 13CD; AND satisfactory operation of program interrupt error checking using 11E4 thru 11EE.	None	None
→ **(2)** IOCE		Satisfactory operation of error checking circuits using: FLT−2, 1501, AND: satisfactory operation of program interrupt error checking using 106B thru 106D, AND satisfactory operation using FLT−1 and FLT−3.	None	None

Section 9. DISPLAY CHANNEL COMPLEX (DCC) SYSTEM (Continued)

Parameter	Reference Paragraph	Standard	Tolerance/Limit	
			Initial	*Operating*
→ **(3)** SE,DE		Satisfactory operation using 22A0, 22A4, 22AA.	None	None
→ **(4)** CC		Satisfactory system monitoring, configuration and monitoring of DGs, RKMs and DAUs, and status reporting on DGs and RKMs, or D6CA6 (SCCU), D9051 (RCU), or SCOPE.	None	None
→ **(5)** DAU		Satisfactory interfacing with the RKMs using the online or offline certification programs, or SEVA (two passes) and: SCOPE, or DB051, DB052, and DB0A1.	None	None
(6) DCU and DD		Satisfactory data storage and retrieval using DD8051 thru DD 8069.	None	None
(7) ICU/HSP; ICU/CRP.				
(a) ICU/HSP		Satisfactory operation of HSP using D6351 thru D6356.	None	None
(b) ICU/CRP		Satisfactory operation of CRP using D6251, D6261, and D6262.	None	None

Section 9. DISPLAY CHANNEL COMPLEX (DCC) SYSTEM (Continued)

Parameter	Reference Paragraph	Standard	Tolerance/Limit	
			Initial	*Operating*
→ **(8)** TCU/TD		Satisfactory data recording and retrieval on magnetic tape using D4050 thru D4060.	None	None
→ **(9)** RKM.				
(a) RKM Equipment . . .	RKM Instruction Book	Satisfactory operation of the DCC system using the online or offline certification program RKM subsystem diagnostics or SCOPE.	None	None
(b) RKM Logic . . . . . Power Supplies.	Procedures related to the criteria in the subparagraphs that follow are contained in sections 6 and 7 of the RKM Instruction Book.			
→ **1** Logic power . . . . supply output voltage.		5.20 V	±0.01 V	±0.10 V
2 Overvoltage . . . . at set point.		5.45 V	±0.01 V	±0.10 V
3 Output . . . . . voltage upper limit.		5.50 V	−−	−−
4 Output . . . . . voltage lower limit.		4.90 V	−−	−−
5 Minimum . . . . . voltage at logic panel.		5.00 V	4.95 V	4.90 V
→ **6** Minimum . . . . . ripple voltage at supply.		0.25 V peak-to-peak	−−	−−

Section 9. DISPLAY CHANNEL COMPLEX (DCC) SYSTEM (Continued)

Parameter	Reference Paragraph	Standard	Tolerance/Limit	
			Initial	Operating
(c) RKM I/O Power Supplies.				
1 +5 Volt power supply.				
→ **a** Output . . . . . voltage at cabinet test points. Both power supplies operating.		5.20 V	±0.01 V	±0.10 V
b Overvoltage . . set point at cabinet test points.		5.30 V	±0.01 V	±0.10 V
c Output . . . . . voltage upper limit at cabinet test points.		5.50 V	– –	– –
d Output . . . . . voltage lower limit at cabinet test points.		5.00 V	– –	– –
e Total . . . . . distribution drop with both power supplies sharing the load.		0.00 V	0.25 V	0.38 V
f Total . . . . . distribution drop with one power supply turned OFF.		0.00 V	0.50 V	Same as initial
g Maximum . . . voltage at power supply when output cabinet test points is set to initial value.		5.58 V	– –	– –

Section 9. DISPLAY CHANNEL COMPLEX (DCC) SYSTEM (Continued)

Parameter	Reference Paragraph	Standard	Tolerance/Limit	
			Initial	Operating
h Differential . . diode drop (measure of power supply balance or load sharing).		0.00 V	±0.02 V	±0.02 V
→ **i** Maximum . . . ripple voltage at supply.		0.25 V peak-to-peak	−−	−−
2 −5 Volt power supply.				
→ **a** Output . . . . . voltage at cabinet test points. Both power supplies operating.		−5.20 V	±0.01 V	±0.10 V
b Overvoltage . . set point at cabinet test points.		−5.30 V	±0.01 V	±0.10 V
c Output . . . . . voltage upper limit at cabinet test points.		−5.00 V	−−	−−
d Output . . . . . voltage lower limit at cabinet test points.		−5.50 V	−−	−−
e Total . . . . . distribution drop with one power supply turned OFF.		0.00 V	0.40 V	Same as initial
f Total . . . . . distribution drop with both power supplies sharing the load.		0.00 V	0.25 V	0.32 V

Section 9. DISPLAY CHANNEL COMPLEX (DCC) SYSTEM (Continued)

Parameter	Reference Paragraph	Standard	Tolerance/Limit	
			Initial	Operating
g Maximum . . . output voltage at power supply when output at cabinet test points is set to initial value.		−5.50 V	−−	−−
h Differential . . diode drop (measure of power supply balance or load sharing).		00.0 V	±0.02 V	±0.04 V
→ **i** Maximum . . . ripple voltage at supply.		0.25 V peak-to-peak		
3 +8 Volt power supply.				
→ **a** Output . . . . . voltage at cabinet test points. Both power supplies operating.		8.1 V	±0.04 V	±0.10 V
b Overvoltage . . set point.		8.35 V	±0.01 V	±0.10 V
c Output . . . . . voltage upper limit at cabinet test points.		8.5 V	−−	−−
d Output . . . . . voltage lower limit at cabinet test points.		7.8 V	−−	−−
e Total . . . . . distribution drop with both power supplies sharing the load.		0.00 V	0.17 V	0.20 V

Section 9. DISPLAY CHANNEL COMPLEX (DCC) SYSTEM (Continued)

Parameter	Reference Paragraph	Standard	Tolerance/Limit	
			Initial	Operating
f Total . . . . . distribution drop with one power supply turned OFF.		0.00 V	0.30 V	Same as initial
g Maximum . . . output voltage at power supply when output at cabinet test points is set to initial value.		8.3 V	−−	−−
h Differential . . diode drop (measure of power supply balance or load sharing).		00.0 V	±0.02 V	±0.04 V
→ **i** Maximum . . . ripple voltage at supply.		0.25 V peak-to-peak	−−	−−
4 −8 Volt . . . . . power supply.		The absolute voltage for this power supply must track the PLUS 8 VOLT POWER SUPPLY within ±0.5 volt.		
(d) RKM Memory Power Supplies.				
1 +5 Volt power supply.				
a Output . . . . . voltage at power supply test points.		5.00 V	±0.02 V	±0.25 V
b Output . . . . . voltage upper limit.		5.25 V	−−	−−
c Output . . . . . voltage lower limit.		4.75 V	−−	−−

Section 9. DISPLAY CHANNEL COMPLEX (DCC) SYSTEM (Continued)

Parameter	Reference Paragraph	Standard	Tolerance/Limit	
			Initial	Operating
d Maximum ... ripple voltage at power supply.		0.25 V peak-to-peak	−−	−−
2 +12 Volt power supply.				
a Output ..... voltage at power supply test points.		12.00 V	±0.06 V	±0.60 V
b Output ..... voltage upper limit.		13.50 V	−−	−−
c Output ..... voltage lower limit.		10.50 V	−−	−−
d Maximum ... ripple voltage at power supply.		0.25 V peak-to-peak	−−	−−
3 −12 Volt power supply.				
a Output ..... voltage at power supply test points.		−12.00 V	±0.06 V	±0.60 V
b Output ..... voltage upper limit.		−10.50 V	−−	−−
c Output ..... voltage lower limit.		−13.50 V	−−	−−
d Maximum ... ripple voltage at power supply.		0.25 V peak-to-peak	−−	−−
4 −15 Volt power supply.				

Section 9. DISPLAY CHANNEL COMPLEX (DCC) SYSTEM (Continued)

Parameter	Reference Paragraph	Standard	Tolerance/Limit	
			Initial	*Operating*
a Output ..... voltage at power supply test points.		−15.00 V	±0.02 V	±0.60 V
b Output ..... voltage upper limit.		−14.00 V	−−	−−
c Output ..... voltage lower limit.		−16.00 V	−−	−−
d Maximum ... ripple voltage at power supply.		0.25 V peak-to-peak	−−	−−
(e) RKM Square Wave Oscillator PCB 385046−1.				
1 Pulse ..... amplitude.		4.0 V	3.0 V minimum	3.0 V minimum
2 Frequency.....		16.0 MHz	±1600 Hz	±1600 Hz
3 Duty cycle ..... (square wave).		50%	±5%	±5%
(10) DG Logic	Display Generator (DG) Instruction Book			
(a) DG Equipment		Satisfactory operation of the DCC system using the online or offline certification program, offline DG subsystem diagnostics or SCOPE.	None.	None,
(b) DG Logic Power Supply.				
→ **1** Logic power .... supply output voltage.		5.40 V	±0.01 V	±0.10 V

Section 9. DISPLAY CHANNEL COMPLEX (DCC) SYSTEM (Continued)

Parameter	Reference Paragraph	Standard	Tolerance/Limit	
			Initial	*Operating*
2 Output . . . . . voltage upper limit.		5.50 V	– –	– –
3 Output . . . . . voltage lower limit.		4.90 V	– –	– –
4 Minimum . . . . . voltage at DCVGs.		5.00 V	4.95 V	4.90 V
5 Maximum . . . . . ripple voltage at supply.		0.25 V peak-to-peak	– –	– –
(c) DG I/O Power Supplies.				
1 +5 Volt power supply.				
→ **a** Output . . . . . voltage at I/O card test points (A8A3E2 to E1). Both supplies operating.		5.00 V	±0.01 V	±0.10 V
b Overvoltage . . set point at I/O card test points (A8A3E2 to E1).		5.10 V	±0.01 V	±0.10 V
c Output . . . . . voltage upper limit at I/O card test points (A8A3E2 to E1).		5.25 V	– –	– –
d Output . . . . . voltage lower limit at I/O test points (A8A3E2 to E1).		4.75 V	– –	– –

Section 9. DISPLAY CHANNEL COMPLEX (DCC) SYSTEM (Continued)

	Parameter	Reference Paragraph	Standard	Tolerance/Limit	
				Initial	Operating
	e Total . . . . . distribution drop with both supplies sharing the load.		0.00 V	0.9 V	1.0 V
	f Total . . . . . distribution drop with one power supply turned OFF.		0.00 V	0.9 V	1.0 V
	g Maximum . . . voltage at power supply when output at I/O card test points (A8A3E2 to E1) is set to initial value.		6.0 V	−−	−−
	h Differential . . current (measure of power supply balance or load sharing).		0.0 A	3.0 A	6.0 A
→	**i** Maximum . . . ripple voltage at supply.		0.25 V peak-to-peak	−−	−−
	2 +8 Volt power supply.				
→	**a** Output . . . . . voltage at cabinet test points. Both supplies operating.		8.1 V	±0.04 V	±0.1 V
	b Overvoltage . . set point at cabinet test points.		8.35 V	±0.01 V	±0.10 V
	c Output . . . . . voltage upper limit at cabinet test points.		8.5 V	−−	−−

Section 9. DISPLAY CHANNEL COMPLEX (DCC) SYSTEM (Continued)

Parameter	Reference Paragraph	Standard	Tolerance/Limit	
			Initial	Operating
d Output ..... voltage lower limit at cabinet test points.		7.8 V	−−	−−
e Total ..... distribution drop with both supplies sharing the load.		0.00 V	0.17 V	0.20 V
f Total ..... distribution drop with one power supply turned OFF.		0.00 V	0.30 V	0.30 V
g Maximum ... voltage at power supply when output at cabinet test points is set to initial value.		8.3 V	−−	−−
h Differential .. diode drop (measure of power supply balance or load sharing).		00.0 V	±0.02 V	±0.04 V
→ **i** Maximum ... ripple voltage at supply.		0.25 V peak-to-peak	−−	−−
3 −8 Volt ..... power supply.		The absolute voltage for this power supply must track the PLUS 8 VOLT POWER SUPPLY within ±0.5 volt.		
(11) PVD.				
(a) HVPS; A1A14, ... (Table 7−6, Step C).	Procedures for these standards may be found in section 7 Volume II of the PVD Instruction Book.			

Section 9. DISPLAY CHANNEL COMPLEX (DCC) SYSTEM (Continued)

Parameter	Reference Paragraph	Standard	Tolerance/Limit	
			Initial	Operating
1 +6.3 V[1] ..... (TP5).		+6.3 V	±0.05 V	±0.10 V
2 −150 V (TP6) ..		−150 V	±1.0 V	±2.0 V
3 +800 V (TP4) ..		+800 V	±4.0 V	±10.0 V
4 +3−5 kV ..... (TP3).		+4.4 kV	±25.0 V	±50.0 V
5 +14 kV ..... (TP1).		+14.5 kV	±100.0 V	±200.0 V
6 Ripple; 14 ..... kV.		4.5 V peak-to-peak	Same as standard	Same as standard
7 Ripple; ..... other voltage outputs.		±0.05% peak-to-peak	Same as standard	Same as standard
(b) Analog/Logic PS; A1A2, (Table 7−6, Step A).				
1 +5 V (A) ..... (TP1).		+5.00 V	±0.05 V	±0.10 V
2 +5 V (B) ..... (TP2).		+5.50 V	±0.05 V	±0.10 V
3 +8 V (TP3)		+8.00 V	±0.05 V	±0.10 V
4 +15 V (TP4) ...		+15.00 V	±0.075 V	±0.15 V
5 +30 V (TP5) ...		+30.00 V	±0.15 V	±0.3 V
6 +50 V (TP6) ...		+50.00 V	±0.25 V	±0.5 V
7 −15 V (TP7) ...		−15.00 V	±0.075 V	±0.15 V
8 −8 V (TP8)		−8.00 V	±0.05 V	±0.10 V
9 −5.2 V (TP9) ..		−5.20 V	±0.05 V	±0.10 V
10 +24 V (TP12) ..		+24.00 V	±0.1 V	±0.25 V
11 +16 V (TP11) ..		+16.00 V	±0.10 V	±0.20 V

[1] The CRT filament voltage given is for a new CRT. The filament voltage may be increased for aged CRT, in increments of 0.5 volts, up to a maximum of 7.3 volts, as necessary to obtain the required brightness.

Section 9. DISPLAY CHANNEL COMPLEX (DCC) SYSTEM (Continued)

Parameter	*Reference Paragraph*	*Standard*	*Tolerance/Limit*	
			Initial	*Operating*
(c) Deflection PS; A1A3, (Table 7–6, Step B).				
1 +15 V (TP2) . . .		+15.00 V	±0.075 V	±0.15 V
2 −15 V (TP3) . . .		−15.00 V	±0.075 V	±0.15 V
3 −44 V (TP4) . . .		−44.00 V	±0.22 V	±0.44 V
4 Ripple.				
+15 V		0.2% peak-to-peak	Same as standard	Same as standard
−15 V		0.2% peak-to-peak	Same as standard	Same as standard
−44 V		1.0 V peak-to-peak	Same as standard	Same as standard
(d) Display Parameters.				
1 Useable . . . . . display area.		19.25 inch (in)	Same as standard	Same as standard
2 Repetition . . . . . frequency.		55 Hz for DCC	Same as standard	Same as standard
3 DCC . . . . . absolute positioning accuracy.		±1%	Same as standard	Same as standard
4 DCC . . . . . relative positioning accuracy.		±0.1%	Same as standard	Same as standard
5 Character . . . . . size.		0.25 inch, large	Same as standard	Same as standard
(e) Display Alignment Procedures/Criteria.				
Table 7–6 . . . . . Alignment Procedures (Steps A thru R).	Procedures for these standards may be found in section 7 Volume II of the PVD Instruction Book.	The method of adjustments results are specified in the adjustment column.	Same as standard	Same as standard

Section 9. DISPLAY CHANNEL COMPLEX (DCC) SYSTEM (Continued)

Parameter	*Reference Paragraph*	*Standard*	*Tolerance/Limit*	
			Initial	*Operating*
(12) RCRD (FA−7914)	Procedures for standards may be found in RCRD Instruction Book.			
(a) LVPS; A1A4, (Table 7−5, Step A).				
1 +22 V		+22.0 V	±0.10 V	±0.20 V
2 −22 V		−22.0 V	±0.10 V	±0.20 V
3 +100 V		+100 V	±0.50 V	±1.0 V
(b) HVPS; A2A4A1, (Table 7−5, Step B).				
1 +12 kV . . . . . (CRT HV Lead).		+12 kV	±100 V	±100 V
2 +500 V . . . . . (TPI−6,7).		+500 V	±2.5 V	±5.0 V
3 −1200 V		−1200 V	±50 V	±50 V
(c) Display Parameters.				
Linearity		Within 3% of full scale deflection.	Same as standard	Same as standard

Section 10. RESERVED

Parameter	*Reference Paragraph*	*Standard*	*Tolerance/Limit*	
			Initial	*Operating*
80. RESERVED.				

Section 11. DARC RADAR DATA PROCESSING (DRAD) SERVICE

Parameter	Reference Paragraph	Standard	Tolerance/Limit	
			Initial	*Operating*
81. DRAD SERVICE.				
→ **a. Narrowband Site Coverage.**	508	Satisfactory coverage as determined using operational program or offline CCCH support programs such as RSCANS, RARRE, QARS as needed.	None	None
→ **b. Range and Azimuth**	508	Search and beacon PE coordinates at their listed mean values verified using geographical map and PE symbology, or registration and collimation.	$\pm 1/8$ nmi and ± 2 ACPs	$\pm 1/8$ nmi and ± 2 ACPs
→ **c. Display Accuracy**	508	PE and RTQC test target symbols within appropriate geographical map symbols.	None	None
→ **d. RDP and Tracking**	508	Successful RDP and tracking as verified using manual entry techniques as necessary.	None	None
→ **e. Data Display and Entry.**	508	Satisfactory display of all class types of data and normal entry and control from the radar console using keyboard entries as necessary.	None	None

Section 11. DARC RADAR DATA PROCESSING (DRAD) SERVICE (Continued)

Parameter	*Reference Paragraph*	*Standard*	*Tolerance/Limit*	
			Initial	*Operating*
→ **f. Video Presentation .....**	508	Operationally satisfactory symbology, data blocks, lists and general presentation quality.	None	None
→ **g. System Error ..... Detection Analysis, and Correction Capability.**	508	Successful system error detection, analysis and correction as verified using manual checking techniques.	None	None
→ **h. Radar Data ..... Transfer.**	508 and 516	Satisfactory system operation (absence of RTQC error printouts during program operation, or from offline CCCH QARS CD quality precheck analysis).	None	None

Section 12. DIRECT ACCESS RADAR CHANNEL (DARC) SYSTEM

Parameter	Reference Paragraph	Standard	Tolerance/Limit	
			Initial	*Operating*
82. DIRECT ACCESS RADAR CHANNEL (DARC) SYSTEM.				
a. DARC System.				
Processing and display of radar data; data entry, display and system control.				
→ **(1)** Local means of ..... entering and receiving data from the DARC.	509f	Satisfactory entry and display of data using DEK/IOT: satisfactory device responses.	None	None
→ **(2)** Flight data ..... interface with CCCH.	509f	Satisfactory transfer of flight data from the CCCH via the GPO adapter to the DARC CP.	None	None
→ **(3)** Controller ..... R-console interface with DARC.	509f	Satisfactory transfer of flight and control data from R−Console to DARC.	None	None
→ **(4)** PVD video ..... presentation	509f	Operationally satisfactory symbology, data blocks, lists, and general presentation quality.	None	None
→ **(5)** DARC system ..... control	509f	Satisfactory performance of DARC automatic error detection and element reconfiguration.	None	None
b. DARC Elements	TI 6160.14	Successful cycling of the maintenance programs checking the performance of the following:		
→ **(1)** Data processing		RDDU, CP and DP	None	None

Section 12. DIRECT ACCESS RADAR CHANNEL (DARC) SYSTEM (Continued)

Parameter	Reference Paragraph	Standard	Tolerance/Limit	
			Initial	*Operating*
→ **(2)** Refresh storage ..... and output.		DP Memory and ROC	None	None
→ **(3)** Display control ..... and data entry interface.		RCC and CCCH	None	None
→ **(4)** Peripherals		DEK/IOT and LP	None	None
→ **(5)** Automatic fault ..... sensing.		CPM	None	None
→ **(6)** Spare CP		Successful cycling of the CP system test program.	None	None
→ **(7)** CP to disk ..... read/write capability.		Successful operation of the disk test programs.	None	None
→ **(8)** CP to tape drives ..... read/write capability.		Successful operation of the tape drive test programs.	None	None
(9) Radar Data ..... Distribution Unit (RDDU).	PAMRI Hardware Technical Manual			
→ **(a)** Firmware..... diagnostic tests.	Par. 11.2			
1 SMP tests ..... 1 through 21	Par. 11.2.2	Error free	Same as standard	Same as standard
2 RDP tests ..... 1 through 14	Par. 11.2.3	Error free	Same as standard	Same as standard
3 DCUP tests .... 1 through 8	Par. 11.2.4	Error free	Same as standard	Same as standard
4 DCU/RAPPI	Par. 11.2.5	Error free	Same as standard	Same as standard
c. DARC Equipment.				
(1) System Status ..... Control (SSC).	TI 6160.2			

Section 12. DIRECT ACCESS RADAR CHANNEL (DARC) SYSTEM (Continued)

Parameter	Reference Paragraph	Standard	Tolerance/Limit	
			Initial	Operating
→ **(a)** +5 Volt ..... Power Supply PS1A and 2A.	Par. 6.2.2	5.00 V	±0.01 V	±0.10 V
→ **(b)** +12 Volt ..... Power Supply PS1B and 2B.	Par. 6.2.2	12.0 V	±0.06 V	±0.60 V
→ **(c)** −12 Volt ..... Power Supply PS1B and 2B.	Par. 6.2.2	−12.0 V	±0.06 V	±0.60 V
(2) Control Processor ..... (CP).	TI 6160.3			
→ **(a)** +5 Volt ..... Power Supply.	Par. 6.2.1	5.00 V	±0.01 V	±0.10 V
→ **(b)** −15 Volt ..... Power Supply.	Par. 6.2.1	−15.00 V	±0.03 V	±0.30 V
→ **(c)** +5 Volt Disk ..... Drive Power Supply.	Par. 6.2.2	5.00 V	±0.10 V	±0.25 V
→ **(d)** +12 Volt Disk ..... Drive Power Supply.	Par. 6.2.2	12.00 V	±0.24 V	±0.60 V
→ **(e)** −12 Volt Disk ..... Drive Power Supply.	Par. 6.2.2	−12.00 V	±0.24 V	±0.60 V
→ **(f)** +5 Volt ..... Battery Backup Power Supply.	Par. 6.2.4	5.00 V	±0.01 V	±0.10 V
(3) Display Processor ..... (DP).	TI 6160.4			
→ **(a)** +5 Volt Power .... Supply.	Par. 6.2	5.00 V	±0.01 V	±0.10 V
→ **(b)** −15 Volt ..... Power Supply.	Par. 6.2	−15.00 V	±0.03 V	±0.30 V
→ **(c)** +5 Volt ..... Battery Backup.	Par. 6.2.2C	5.00 V	±0.01 V	±0.10 V
(4) Printer Circuit ..... Board Tester (PCBT).	TI 6160.5A			
(a) +5 Volt ..... Power Supply PS1.	Par. 6.2.1	5.00 V	±0.01 V	±0.10 V

Section 12. DIRECT ACCESS RADAR CHANNEL (DARC) SYSTEM (Continued)

Parameter	Reference Paragraph	Standard	Tolerance/Limit	
			Initial	Operating
(b) −15 Volt ..... Power Supply PS2.	Par. 6.2.1	−15.00	±0.03 V	±0.30 V
(c) +12 Volt ..... Power Supply PS3.	Par. 6.2.1	12.00 V	±0.06 V	±0.60 V
(d) −12 Volt ..... Power Supply PS3.	Par. 6.2.1	−12.00 V	±0.06 V	±0.60 V
(e) +5.1 Volt ..... Power Supply PS4.	Par. 6.2.1	5.10 V	±0.01 V	±0.10 V
(5) Radar Data ..... Distribution Unit (RDDU).	PAMRI Hardware Technical Manual			
(a) Power supply ..... voltages.	Par. 6.4.2	5.00 V	±0.1 V	±0.1 V
→ **1** 5 V supply	Par. 6.4.2	5.00 V	±0.1 V	±0.1 V
→ **2** Maximum ..... ripple.	Par. 6.4.2a	25 mV peak-to-peak	50 mV peak-to-peak	50 mV peak-to-peak
→ **(6)** RKM/IO Power supply (Required only at facilities having DCCR equipment)				
(a) +5 Volt power supply.				
→ **1** Output..... voltage at cabinet test points. Both power supplies operating.		5.20 V	±0.01 V	±0.10 V
2 Overvoltage .... set point at cabinet test points.		5.30 V	±0.01 V	±0.10 V
3 Output..... voltage upper limit at cabinet test points.		5.50 V	−−	−−

Section 12. DIRECT ACCESS RADAR CHANNEL (DARC) SYSTEM (Continued)

Parameter	Reference Paragraph	Standard	Tolerance/Limit	
			Initial	*Operating*
4 Output voltage lower limit at cabinet test points.		5.00 V	−−	−−
5 Total distribution drop with both power supplies sharing the load.		0.00 V	0.25 V	0.38 V
6 Total distribution drop with one power supply turned OFF.		0.00 V	0.50 V	Same as initial
7 Maximum voltage at power supply when output cabinet test points is set to initial value.		5.58 V	−−	−−
8 Differential diode drop (measure of power supply balance or load sharing).		0.00 V	±0.02 V	±0.02 V
→ **9** Maximum ripple voltage at supply.		0.25 V peak-to-peak	−−	−−
(b) −5 Volt power supply.				
→ **1** Output voltage at cabinet test points. Both power supplies operating.		−5.20 V	±0.01 V	±0.10 V
2 Overvoltage set point at cabinet test points.		−5.30 V	±0.01 V	±0.10 V
3 Output voltage upper limit at cabinet test points.		−5.00 V	−−	−−

Section 12. DIRECT ACCESS RADAR CHANNEL (DARC) SYSTEM (Continued)

Parameter	Reference Paragraph	Standard	Tolerance/Limit	
			Initial	*Operating*
4 Output voltage lower limit at cabinet test points.		−5.50 V	−−	−−
5 Total distribution drop with one power supply turned OFF.		0.00 V	0.40 V	Same as initial
6 Total distribution drop with both power supplies sharing the load.		0.00 V	0.25 V	0.32 V
7 Maximum output voltage at power supply when output at cabinet test points is set to initial value.		−5.50 V	−−	−−
8 Differential diode drop (measure of power supply balance or load sharing).		00.0 V	±0.02 V	±0.04 V
→ **9** Maximum ripple voltage at supply.		0.25 V peak-to-peak		
(c) +8 Volt power supply.				
→ **1** Output voltage at cabinet test points. Both power supplies operating.		8.1 V	±0.04 V	±0.10 V
2 Overvoltage set point.		8.35 V	±0.01 V	±0.10 V
3 Output voltage upper limit at cabinet test points.		8.5 V	−−	−−

Section 12. DIRECT ACCESS RADAR CHANNEL (DARC) SYSTEM (Continued)

Parameter	Reference Paragraph	Standard	Tolerance/Limit	
			Initial	*Operating*
4 Output voltage lower limit at cabinet test points.		7.8 V	−−	−−
5 Total distribution drop with both power supplies sharing the load.		0.00 V	0.17 V	0.20 V
6 Total distribution drop with one power supply turned OFF.		0.00 V	0.30 V	Same as initial
7 Maximum output voltage at power supply when output at cabinet test points is set to initial value.		8.3 V	−−	−−
8 Differential diode drop (measure of power supply balance or load sharing).		00.0 V	±0.02 V	±0.04 V
→ **9** Maximum ripple voltage at supply.		0.25 V peak-to-peak	−−	−−
(d) −8 Volt power supply.		The absolute voltage for this power supply must track the PLUS 8 VOLT POWER SUPPLY within ±0.5 volt.		
→ **(7)** DG Logic Power Supply (Required only at facilities having DCCR equipment).				
→ **(a)** Logic power supply output voltage.		5.40 V	±0.01 V	±0.10 V

Section 12. DIRECT ACCESS RADAR CHANNEL (DARC) SYSTEM (Continued)

Parameter	Reference Paragraph	Standard	Tolerance/Limit	
			Initial	Operating
(b) Output ..... voltage upper limit.		5.50 V	––	––
(c) Output ..... voltage lower limit.		4.90 V	––	––
(d) Minimum ..... voltage at DCVGs.		5.00 V	4.95 V	4.90 V
(e) Maximum ..... ripple voltage at supply.		0.25 V peak-to-peak	––	––
→ **(8)** DG I/O Power ..... Supply (Required only at facilities having DCCR equipment).				
(a) +5 Volt power supply.				
→ **1** Output..... voltage at I/O card test points (A8A3E2 to E1). Both supplies operating.		5.00 V	±0.01 V	±0.10 V
2 Overvoltage .... set point at I/O card test points (A8A3E2 to E1).		5.10 V	±0.01 V	±0.10 V
3 Output..... voltage upper limit at I/O card test points (A8A3E2 to E1).		5.25 V	––	––
4 Output..... voltage lower limit at I/O test points (A8A3E2 to E1).		4.75 V	––	––
5 Total ..... distribution drop with both supplies sharing the load.		0.00 V	0.9 V	1.0 V

Section 12. DIRECT ACCESS RADAR CHANNEL (DARC) SYSTEM (Continued)

Parameter	Reference Paragraph	Standard	Tolerance/Limit	
			Initial	*Operating*
6 Total ..... distribution drop with one power supply turned OFF.		0.00 V	0.9 V	1.0 V
7 Maximum ..... voltage at power supply when output at I/O card test points (A8A3E2 to E1) is set to initial value.		6.0 V	−−	−−
8 Differential ..... current (measure of power supply balance or load sharing).		0.0 A	3.0 A	6.0 A
→ **9** Maximum ..... ripple voltage at supply.		0.25 V peak-to-peak	−−	−−
(b) +8 Volt power supply.				
→ **1** Output ..... voltage at cabinet test points. Both supplies operating.		8.1 V	±0.04 V	±0.1 V
2 Overvoltage .... set point at cabinet test points.		8.35 V	±0.01 V	±0.10 V
3 Output ..... voltage upper limit at cabinet test points.		8.5 V	−−	−−
4 Output ..... voltage lower limit at cabinet test points.		7.8 V	−−	−−

Section 12. DIRECT ACCESS RADAR CHANNEL (DARC) SYSTEM (Continued)

Parameter	Reference Paragraph	Standard	Tolerance/Limit	
			Initial	*Operating*
5 Total ..... distribution drop with both supplies sharing the load.		0.00 V	0.17 V	0.20 V
6 Total ..... distribution drop with one power supply turned OFF.		0.00 V	0.30 V	0.30 V
7 Maximum ..... voltage at power supply when output at cabinet test points is set to initial value.		8.3 V	−−	−−
8 Differential ..... diode drop (measure of power supply balance or load sharing).		00.0 V	±0.02 V	±0.04 V
→ **9** Maximum ..... ripple voltage at supply.		0.25 V peak-to-peak	−−	−−
(c) −8 Volt ..... power supply.		The absolute voltage for this power supply must track the PLUS 8 VOLT POWER SUPPLY within ±0.5 Volt.		

Section 13. RADAR DATA ENTRY AND DISPLAY (RDED) SUBSYSTEM (DCCR)

Parameter	*Reference Paragraph*	*Standard*	*Tolerance/Limit*	
			Initial	*Operating*
83. RADAR DATA ENTRY AND DISPLAY (RDED) SUBSYSTEM (DCCR)				
→ **a. Processing and ..... Display of Radar Data on PVD.**	509e and DCCR−1428	Satisfactory display of radar using the online or offline certification program, online test pattern or SCOPE or DCCMNT D71D1 SEG 9 Test 17.	None	None
→ **b. Entry, Processing, ... and Display of Data (CED/CRD).**	509e and DCCR−1428	Satisfactory entry and display of flight data using the online or offline certification program, online test pattern, Interactive keys/display constants test or SCOPE or DCCMNT D71D1 SEG 1 Test 2.	None	None
→ **c. DCCR System ..... Reconfiguration, and Startovers.**	509e and NAS Monitor Manual	Satisfactory reconfigurations and startover modes using the online or offline certification programs, or manual entries with the NAS operational program, or SCOPE or DCCMNT D71D1 SEG 15 Test 33.	None	None

Section 14. DISPLAY CHANNEL COMPLEX REHOST (DCCR) SYSTEM

Parameter	Reference Paragraph	Standard	Tolerance/Limit	
			Initial	Operating
84. DISPLAY CHANNEL COMPLEX REHOST (DCCR).				
→ **a. DCCR System**	510,	Satisfactory display Equipment channel processing using the online or offline certification or DCCMNT D71D1 SEG 9 Test 17 following diagnostic testing Par. 84b below.	None	None
→ **b. DCCR Elements.**				
→ **(1)** Processor 9221–170	IBM S224–1770–04	Satisfactory execution of Extended Processor Test, Processor and Input/Output Tests, and a 5 minute run System Exerciser Test.	None	None
→ **(2)** Processor Console ..... PS/2 Model 57.	IBM S224–1768–04	Successful completion of POST.	None	None
→ **(3)** Establishment..... Controller 3174–21L.	IBM S224–1770–04	Successful completion of the System Exerciser.	None	None
→ **(4)** Multi-System..... Channel Communications Unit MCCU.	IBM S224–1770–04 IBM S224–1768–04	Successful completion of the MCCU logic card Test, MCCU Memory Tests, Channel Adapter Tests, Internal Wrap Tests, CTC OLTS between 9221 processors and OLTS T3150A and OLTS T3150STS between 3083 (or 9672) and 9221 processors.	None	None

Section 14. DISPLAY CHANNEL COMPLEX REHOST (DCCR) SYSTEM (Continued)

Parameter	*Reference Paragraph*	*Standard*	*Tolerance/Limit*	
			Initial	*Operating*
→ **(5)** Tape Control Unit ..... (TCU).	IBM S224−1770−04	Successful completion of the System Exerciser and OLTS T3480A.	None	None
→ **(6)** Tape Drive (TD)	IBM S224−1770−04	Successful completion of the System Exerciser and OLTS T3480A.	None	None
→ **(7)** Replacement I/O ..... Terminal (RIOT).	IBM S224−1768−04	Successful completion of the POST.	None	None
→ **(8)** Display Controller ..... (DC).	DCCR−1428	Successful completion of all DC Diagnostics or SCOPE or DCCMNT D71D1 SEG 9 Test 17.	None	None
→ **(a)** 5 Volt Power ..... Supply.		5.00 V	±0.01 V	±0.10 V
→ **(b)** 12 Volt Power ..... Supply.		12.00 V	±0.02 V	±0.20 V

Section 14. DISPLAY CHANNEL COMPLEX REHOST (DCCR) SYSTEM (Continued)

Parameter	*Reference Paragraph*	*Standard*	*Tolerance/Limit*	
			Initial	*Operating*
(9) PVD.				
(a) HVPS; A1A14, ... (Table 7–6, Step C).	Procedures for these standards may be found in section 7 Volume II of the PVD Instruction Book.			
1 +6.3 V[1] ..... (TP5).		+6.3 V	±0.05 V	±0.10 V
2 –150 V (TP6) ..		–150 V	±1.0 V	±2.0 V
3 +800 V (TP4) ..		+800 V	±4.0 V	±10.0 V
4 +3–5 kV ..... (TP3).		+4.4 kV	±25.0 V	±50.0 V
5 +14 kV ..... (TP1).		+14.5 kV	±100.0 V	±200.0 V
6 Ripple; 14 ..... kV.		4.5 V peak-to-peak	Same as standard	Same as standard
7 Ripple; ..... other voltage outputs.		±0.05% peak-to-peak	Same as standard	Same as standard
(b) Analog/Logic PS; A1A2, (Table 7–6, Step A).				
1 +5 V (A) ..... (TP1).		+5.00 V	±0.05 V	±0.10 V
2 +5 V (B) ..... (TP2).		+5.50 V	±0.05 V	±0.10 V
3 +8 V (TP3)		+8.00 V	±0.05 V	±0.10 V
4 +15 V (TP4) ...		+15.00 V	±0.075 V	±0.15 V
5 +30 V (TP5) ...		+30.00 V	±0.15 V	±0.3 V
6 +50 V (TP6) ...		+50.00 V	±0.25 V	±0.5 V
7 –15 V (TP7) ...		–15.00 V	±0.075 V	±0.15 V

[1] The CRT filament voltage given is for a new CRT. The filament voltage may be increased for aged CRT, in increments of 0.5 volts, up to a maximum of 7.3 volts, as necessary to obtain the required brightness.

Section 14. DISPLAY CHANNEL COMPLEX REHOST (DCCR) SYSTEM (Continued)

Parameter	*Reference Paragraph*	*Standard*	*Tolerance/Limit*	
			Initial	*Operating*
8 −8 V (TP8)		−8.00 V	±0.05 V	±0.10 V
9 −5.2 V (TP9) . .		−5.20 V	±0.05 V	±0.10 V
10 +24 V (TP12) . .		+24.00 V	±0.1 V	±0.25 V
11 +16 V (TP11) . .		+16.00 V	±0.10 V	±0.20 V
(c) Deflection PS; A1A3, (Table 7−6, Step B).				
1 +15 V (TP2) . . .		+15.00 V	±0.075 V	±0.15 V
2 −15 V (TP3) . . .		−15.00 V	±0.075 V	±0.15 V
3 −44 V (TP4) . . .		−44.00 V	±0.22 V	±0.44 V
4 Ripple.				
+15 V		0.2% peak-to-peak	Same as standard	Same as standard
−15 V		0.2% peak-to-peak	Same as standard	Same as standard
−44 V		1.0 V peak-to-peak	Same as standard	Same as standard
(d) Display Parameters.				
1 Useable . . . . . display area.		19.25 inch (in)	Same as standard	Same as standard
2 Repetition . . . . . frequency.		55 Hz	Same as standard	Same as standard
3 DCCR . . . . . absolute positioning accuracy.		±1%	Same as standard	Same as standard
4 DCCR . . . . . relative positioning accuracy.		±0.1%	Same as standard	Same as standard
5 Character . . . . . size.		0.25 inch, large	Same as standard	Same as standard
(e) Display Alignment Procedures/Criteria.				

Section 14. DISPLAY CHANNEL COMPLEX REHOST (DCCR) SYSTEM (Continued)

Parameter	*Reference Paragraph*	*Standard*	*Tolerance/Limit*	
			Initial	*Operating*
Table 7–6 ..... Alignment Procedures (Steps A thru R).	Procedures for these standards may be found in section 7 Volume II of the PVD Instruction Book.	The method of adjustments results are specified in the adjustment column.	Same as standard	Same as standard
(10) RCRD (FA–7914)	Procedures for standards may be found in RCRD Instruction Book.			
(a) LVPS; A1A4, (Table 7–5, Step B).				
1 +22V		+22.0 V	±0.10 V	±0.20 V
2 –22 V		–22 V	±0.10 V	±0.20 V
3 +100 V		+100 V	±0.50 V	±1.0 V
(b) HVPS; A2A4A1, (Table 7–5, Step B).				
1 +12 kV ..... (CRT HV Lead).		+12 kV	±100 V	±100 V
2 +500 V ..... (TPI–6,7).		+500 V	±2.5 V	±5.0 V
3 –1200 V		–1200 V	±50 V	±50 V
(c) Display Parameters.				
Linearity		Within 3% of full scale deflection.	Same as standard	Same as standard

Section 15. RADAR DATA ENTRY AND DISPLAY (RDED) SUBSYSTEM DISPLAY SYSTEM REPLACEMENT (DSR)

Parameter	Reference Paragraph	Standard	Tolerance/Limit	
			Initial	Operating
85. RADAR DATA ENTRY AND DISPLAY (RDED) SUBSYSTEM (DSR).				
→ **a. Processing and Display .. of Radar Data.**	509e and TI 6160.50, CDRL. DPU07, DSR Air Traffic Controllers Users Manual.	Satisfactory display of radar data on each DSR R–Console using the online certification program, or the enhanced online test pattern.	None	None
→ **b. Entry, Processing and .... Display of Data (CED/ CRD).**	509e and TI 6160.50, DSR Air Traffic Controllers Users Manual.	Satisfactory entry and display of flight data using the enhanced online test pattern, or manual entry.	None	None
→ **c. DSR System ..... Reconfiguration.**	TI 6160.58 ARTCC System Management Manual, ref: 4.2.3.	Successful reconfigurations resulting in PAS/SAS switching of Operational Units (OU).	None	None
d. Transfer of data ..... between CCCH and the A and D Controller positions.	509e and TI 6160.50, DSR Air Traffic Controllers Users Manual.	Satisfactory entry and display of flight data on A and D Controller positions.	None	None

Section 16. DISPLAY SYSTEM REPLACEMENT (DSR) SYSTEM

Parameter	Reference Paragraph	Standard	Tolerance/Limit	
			Initial	*Operating*
86. DISPLAY SYSTEM REPLACEMENT (DSR) SYSTEM.				
→ **a. Primary Channel Processor (PCP) RISC/6000, Model 7018−770.**				
(1) Processor embedded .... diagnostics, including BIST and POST.	TI 6160.53 Rack Mounted Components Hardware Technical Manual, Section 7, (Quick Check for the RISC System/6000 Processing).	Successful completion of the POST diagnostics.	None	None
		AND:		
(2) APRL command ..... executed at the M&C position performs a hardware/software verification to the targeted processor prior to obtaining operational status.	TI 6160.58 ARTCC System Management Manual, Appendix B.	Successful acceptance of the processor into its assigned role at the M & C console.		
→ **b. Backup Channel Processor (BCP) RISC/6000, Model 7018−771.**				
(1) Processor embedded .... diagnostics, including BIST and POST.	TI 6160.53 Rack Mounted Components Hardware Technical Manual, Section 7, (Quick Check for the RISC System/6000 Processing).	Successful completion of the POST diagnostics.	None	None
		AND:		
(2) APRL command ..... executed at the M&C position performs a hardware/software verification to the targeted processor prior to obtaining operational status.	TI 6160.58 ARTCC System Management Manual, Appendix B.	Successful acceptance of the processor into its assigned role at the M & C console.		
→ **c. System Analysis Recording Processor (SAR) RISC/6000, Model 7018−771.**				

Section 16. DISPLAY SYSTEM REPLACEMENT (DSR) SYSTEM (Continued)

Parameter	Reference Paragraph	Standard	Tolerance/Limit	
			Initial	Operating
(1) Processor embedded .... diagnostics, including BIST and POST.	TI 6160.53 Rack Mounted Components Hardware Technical Manual, Section 7 (Quick Check for the RISC System/6000 Processing).	Successful completion of the POST diagnostics.	None	None
		AND:		
(2) APRL command ..... executed at the M&C position performs a hardware/software verification to the targeted processor prior to obtaining operational status.	TI 6160.58 ARTCC System Management Manual, Appendix B.	Successful acceptance of the processor into its assigned role at the M & C console.		
→ **d. History Alert Log Processor (HAL) RISC/6000, Model 7018−771.**				
(1) Processor embedded .... diagnostics, including BIST and POST.	TI 6160.53 Rack Mounted Components Hardware Technical Manual, Section 7 (Quick Check for the RISC System/6000 Processing).	Successful completion of the POST diagnostics.	None	None
		AND:		
(2) APRL command ..... executed at the M&C position performs a hardware/software verification to the targeted processor prior to obtaining operational status.	TI 6160.58 ARTCC System Management Manual, Appendix B.	Successful acceptance of the processor into its assigned role at the M & C console.		
e. LCN Interface Unit Processor (LIU) RISC/6000, Model 7018−771.				
(1) Processor embedded .... diagnostics, including BIST and POST.	TI 6160.53 Rack Mounted Components Hardware Technical Manual, Section 7 (Quick Check for the RISC System/6000 Processing).	Successful completion of the POST diagnostics.	None	None

Section 16. DISPLAY SYSTEM REPLACEMENT (DSR) SYSTEM (Continued)

Parameter	Reference Paragraph	Standard	Tolerance/Limit	
			Initial	*Operating*
		AND:		
(2) APRL command ..... executed at the M&C position performs a hardware/software verification to the targeted processor prior to obtaining operational status.	TI 6160.58 ARTCC System Management Manual, Appendix B.	Successful acceptance of the processor into its assigned role at the M & C console.		
(3) MDM D7C51	FAA−4320	Error free operation	Same as standard	Same as standard
→ **f. EDARC System Interface Processor (ESI) RISC/6000, Model 7018−771.**				
(1) Processor embedded .... diagnostics, including BIST and POST.	TI 6160.53 Rack Mounted Components Hardware Technical Manual, Section 7 (Quick Check for the RISC System/6000 Processing).	Successful completion of the POST diagnostics.	None	None
		AND:		
(2) APRL command ..... executed at the M&C position performs a hardware/software verification to the targeted processor prior to obtaining operational status.	TI 6160.58 ARTCC System Management Manual, Appendix B.	Successful acceptance of the processor into its assigned role at the M & C console.		
g. D/A Position Processor RISC/6000, Model 7018−770.				
(1) Processor embedded .... diagnostics, including BIST and POST.	TI 6160.53 Rack Mounted Components Hardware Technical Manual, Section 7 (Quick Check for the RISC System/6000 Processing).	Successful completion of the POST diagnostics.	None	None

Section 16. DISPLAY SYSTEM REPLACEMENT (DSR) SYSTEM (Continued)

Parameter	Reference Paragraph	Standard	Tolerance/Limit	
			Initial	Operating
		AND:		
(2) APRL command ..... executed at the M&C position performs a hardware/software verification to the targeted processor prior to obtaining operational status.	TI 6160.58 ARTCC System Management Manual, Appendix B.	Successful acceptance of the processor into its assigned role at the M & C console.		
→ **h. LCN Bridge Processor PS/2, Model 55 SX.**				
(1) Processor embedded .... diagnostics, including BIST and POST.	TI 6160.53 Rack Mounted Components Hardware Technical Manual, Section 6 (Bridge Verification).	Successful completion of the Bridge verification diagnostics.	None	None
		AND:		
(2) BRDG command ..... executed at the M&C position, enables bridge to forward data and updates network topology.	TI 6160.58 ARTCC System Management Manual, Appendix B.	Successful acceptance of the Bridge into its role at the M & C console.		
i. WARP System Interface Processor RISC/6000, Model 7018–771.				
(1) Processor embedded .... diagnostics, including BIST and POST.	TI 6160.53 Rack Mounted Components Hardware Technical Manual, Section 7 (Quick Check for the RISC System/6000 Processing).	Successful completion of the POST diagnostics.	None	None
		AND:		
(2) APRL command ..... executed at the M&C position performs a hardware/software verification to the targeted processor prior to obtaining operational status.	TI 6160.58 ARTCC System Management Manual, Appendix B.	Successful acceptance of the processor into its assigned role at the M & C console.		
87.–99. RESERVED.				

CHAPTER 4. PERIODIC MAINTENANCE

100. GENERAL.

a. This chapter establishes all the maintenance activities required for the NAS En Route Stage A, Air Route Traffic Control System on a periodic, recurring basis, and the schedules for their accomplishment. The chapter is divided into two sections. The first section identifies the performance checks (i.e., tests, measurements, and observations) of normal operating controls and functions which are necessary to determine whether operation is within established tolerances or limits. The second section identifies other maintenance tasks that are necessary to prevent deterioration and ensure reliable operation. Refer to the latest edition of Order 6000.15 for additional general guidance.

b. All reference paragraphs pertaining to standards and tolerance/limits are found in chapter 3 of this order, unless otherwise stated.

Section 1. PERFORMANCE CHECKS

(Refer to equipment instruction books for all reference paragraphs, figures and tables, unless otherwise indicated).

Subsection 1. CCCH SYSTEM PERFORMANCE CHECKS

Performance Checks	*Reference Paragraph*	
	Standards & Tolerances	*Maintenance Procedures*
101.–118. RESERVED.		
119. HOST INTERFACE DEVICE (HID).		
a. Weekly.		
(1) Inspect and archive error, fault history logs . .	No excess accumulation of errors	HNL Maintenance Handbook, Order 6031, Par. 89
(2) Inspect file system status	A minimum amount free	HNL Maintenance Handbook, Order 6031, Par. 88
(3) Check tape drive operation	Error free operation	
(4) Check floppy drive operation	Error free operation	
b. Quarterly.		
(1) POST	Par. 75b (1)	HNL Level One Maintenance Manual, Section 3.4 and Section 3.4.2
(2) Internal Diagnostics	Par. 75b (2)	7009 Compact Server Operator Guide, Chapter 4, pages 4–12 and 4–13
(3) Multiprogramming Diagnostic Monitor (MDM) .	Par. 75b (3)	HNL Maintenance Handbook, Order 6031, Par. 92; HNL Level One Maintenance Manual, App E; FAA–4321–H, Section 5.0
(a) Section 1, D7851000 Verify Proper Operation of the CIU.		
(b) Section 2, D7852000 Verify Proper Operation of NETI/NETO.		
(c) Section 3, D7853000 Verify Throughput is at least 100 kbps.		

Section 1. PERFORMANCE CHECKS (Continued)

Subsection 1. CCCH SYSTEM PERFORMANCE CHECKS (Continued)

Performance Checks	*Reference Paragraph*	
	Standards & Tolerances	*Maintenance Procedures*
c. Annually.		
Check power cords, cables, and connectors	Connectors secure and cables undamaged.	HNL Maintenance Handbook, Order 6031, Par. 87.
120. DSR PRINTER CONTROL UNIT.		
a. Quarterly.		
(1) Perform POST ..... diagnostics.	Par. 75c (1)	TI 6160.53 Rack Mounted Components Hardware Technical Manual, Section 7 (Quick check for RISC system/6000 processing).
(2) Run MDM D7951	Par. 75c (2)	FAA–4319
121. CCCH SYSTEM.		
a. Daily.		
Print and analyze environmental record ..... editing and printing (EREP) system summary report.		IBM GC28–1378
b. Monthly.		
Print and analyze EREP trends report		IBM GC28–1378
122. 3420 MAGNETIC TAPE UNIT.		
Quarterly.		
Run OLTS T3420E	Par. 75a(5)	IBM D99–3420A
123. RESERVED.		
124. 4248 PRINTER EQUIPMENT.		
Weekly.		
(1) Run print quality check, internal ..... utility 'C6' routine.		IBM GA24–3898
(2) Run error log print, internal utility ..... 'C7' routine.		IBM GA24–3898

Section 1. PERFORMANCE CHECKS (Continued)

Subsection 1. CCCH SYSTEM PERFORMANCE CHECKS (Continued)

Performance Checks	*Reference Paragraph*	
	Standards & Tolerances	*Maintenance Procedures*
125. 3268 CONSOLE PRINTER.		
Weekly.		
Run print quality check, basic assurance test (BAT) and print error log, internal test.		IBM GA27–3270 Chapter 2
126. 3480 CARTRIDGE TAPE CONTROL UNIT.		
Quarterly.		
Run OLTS T3480A	Par. 75a(6)	IBM D99–3480A
127. 3725 COMMUNICATION CONTROLLER.		
Quarterly.		
Run OLTS T3725AA–AN	Par. 75a(11)	IBM D99–3725A
128. 3480 CARTRIDGE TAPE UNIT.		
Quarterly.		
Run OLTS T3480C	Par. 75a(7)	IBM D99–3480C
129. ADAPTER UNIT (AU)		PAMRI Hardware Technical Manual
Quarterly.		
(1) Run firmware diagnostic tests	Par. 75a(9)(b)	Par. 11.1
(a) IOP all tests except 42	Par. 75a(9)(b)1	Par. 11.1.1
(b) IOA Serial all tests except 7, 20, 35, 36, and 37	Par. 75a(9)(b)2	Par. 11.1.3
(c) IOA Parallel all tests except 7, 20, 32, 33, 34, and 37	Par. 75a(9)(b)3	Par. 11.1.4
(d) V3710	Par. 75a(9)(b)4	Par. 11.1.5
(2) Run MDM DCC51	Par. 75a(9)(c)	FAA 2373 Section 3.0

Section 1. PERFORMANCE CHECKS (Continued)

Subsection 2. AIR TRAFFIC CONTROL COMPUTER SYSTEM PERFORMANCE CHECKS

Performance Checks	*Reference Paragraph*	
	Standards & Tolerances	*Maintenance Procedures*
130. INTERFACILITY DATA COMMUNICATION.		
Refer to Order 6170.10 for maintenance of Paradyne and CODEX Modems.		
131. CODED TIME SOURCE (CTS).		
Quarterly.		
Run D7A52 CTS Command	Par. 74c	FAA–4313
132. FLIGHT STRIP PRINTER (FSP) ..... (ALL TYPES)		FEMM, MDM Manual
Weekly.		
(1) Satisfactory transfer of data to ..... the FSP as determined using SCOPE, OLC, OLCT, NSCT, or NAS TD messages.	Par. 74g	509c
(2) Correct device response, registration ..... and printing as determined using SCOPE, OLC, OLCT, NSCT, or NAS TD messages.	Par. 74g	
133. FLIGHT DATA INPUT OUTPUT (FDIO).		
Weekly.		
(1) Satisfactory transfer of data from the ..... keyboard to the CCCH as checked by SCOPE, NAS TD message, OLC, OLCT, or NSCT.	Par. 74f	509c
(2) Satisfactory transfer of data to remote site .. as determined at the ARTCC using SCOPE, OLC, OLCT, NSCT, or NAS TD messages.	Par. 74f	509c
(3) Correct device response, registration ..... printing, and entry of data as determined at the remote site using local testing TD messages.	Par. 74f	
134. RESERVED.		

Section 1. PERFORMANCE CHECKS (Continued)

Subsection 2. AIR TRAFFIC CONTROL COMPUTER SYSTEM PERFORMANCE CHECKS (Continued)

Performance Checks	*Reference Paragraph*	
	Standards & Tolerances	*Maintenance Procedures*
135. COMPUTER UPDATE EQUIPMENT (CUE).		
Quarterly.		
NRCRD check and adjustments	Table 7–5	CDE/CUE Non–Radar Computer Readout Display, Equipment Instruction Book, Section 6, par. 6.0
136. RESERVED.		
137. NON–RADAR KEYBOARD MULTIPLEXER (NRKM).		
a. Monthly Reconfiguration.....	ERROR FREE	NRKM Instruction Book, Section 6, par. 5.1
b. Quarterly.		
(1) Error and status reporting ..... (Fan FAIL circuit test)		NRKM Instruction Book, Section 6, pars. 5.2 and 5.7
(2) Indicator checks		FAA–4404, Maintenance Procedures Non–Radar Channel (NRC) Subsystem, par. 449
c. Semiannually.		
Unit logic tests using test cart tests	ERROR FREE	Test Equipment Console Users Manual
138. COMPUTER UPDATE EQUIPMENT TEST CART.		
Monthly.		
Execute test cart confidence tape to ..... verify proper operation.		Section 6, Test Cart Instruction Manual
139.–145 RESERVED.		

Section 1. PERFORMANCE CHECKS (Continued)

Subsection 3. RADAR DATA ACQUISITION SYSTEM PERFORMANCE CHECKS

Performance Checks	*Reference Paragraph*	
	Standards & Tolerances	*Maintenance Procedures*
146. RADAR DATA ANALYSIS.		
a. Weekly.		
Perform operational analysis using the ..... QARS program. Verify that the parameters meet the specified criteria. (It is assumed that a site encountering problems will be analyzed on a daily basis until the problem is resolved.	Par. 72j	Par. 526
b. Quarterly.		
Using recorded radar data from either the NAS Online Radar Recording (ORR) function or the CD RECORD program, D74B3, execute the following CCCH off-line analysis programs: COMDIG, BFTA, RARRE and RSCANS. Utilizing the resultant output, accomplish an analysis of the radar subsystem's operational performance.		
147.–149. RESERVED		

Section 1. PERFORMANCE CHECKS (Continued)

Subsection 4. COMPUTER DISPLAY CHANNEL PERFORMANCE CHECKS

(Procedures related to the criteria in the subparagraphs that follow are contained in sections 6 and 7 of the CDC Systems Instruction Book Vol. II, issued by EEM 6160.1, chapter 263 (latest version), unless otherwise stated.)

Performance Checks	*Reference Paragraph*	
	Standards & Tolerances	*Maintenance Procedures*
150. COMPUTER DISPLAY CHANNEL (CDC).		
a. Daily.		
Run OLM system test or OLM PVD test	ERROR FREE	Offline Maintenance (OLM) Users Manual (UM)
b. Weekly.		
Lamp and indicator check on CCM	Visual	Section 7, par. 2.5.5
c. Monthly.		
(1) R–console display online test pattern ..... (TSTP)	Visual	Section 7, par. 1.3.1
(2) R–console data entry manual entries ..... from the quick-action and alphanumeric keyboards and the trackball.	Visual	Section 7, par. 1.3.2
(3) Lamp and indicator checks all units	Visual	Section 7, par. 2.5.5
d. Quarterly.		
(1) Perform line printer translator check	ERROR FREE	Offline Maintenance Users Manual
(2) Perform read/write controller check	ERROR FREE	Offline Maintenance Users Manual
(3) CCM Test Cart Test	ERROR FREE	Test Equipment Console Users Manual
e. Semiannually.		
(1) Check thermal sensors and ..... overtemperature indicators.	Visual	Section 7, par. 2.5.3
(2) Unit logic checks using Offline Maintenance (OLM) or Test Equipment Console (TEC) tests.		

Section 1. PERFORMANCE CHECKS (Continued)

Subsection 4. COMPUTER DISPLAY CHANNEL PERFORMANCE CHECKS (Continued)

Performance Checks	*Reference Paragraph*	
	Standards & Tolerances	*Maintenance Procedures*
(a) IOC Test Cart Test	ERROR FREE	TEC, UM
(b) IOC OLM/71C2 Test	ERROR FREE	OLM/MDM, UM
(c) HSF Test Cart Test	ERROR FREE	TEC, UM
(d) RMC Test Cart Test	ERROR FREE	TEC, UM
(e) RMIOC Test Cart Test	ERROR FREE	TEC, UM
(f) RKM Test Cart Test	ERROR FREE	TEC, UM
(3) BM Bus Test.		
(a) IOC on spare bus	ERROR FREE	Equipment Instruction Book, Section 7
(b) IOC on IOC/RMC bus	ERROR FREE	
(c) HSF on spare bus	ERROR FREE	
(d) HSF on HSF bus	ERROR FREE	
(e) RMC on spare bus	ERROR FREE	
(f) RMC on IOC/RMC bus	ERROR FREE	
151.–174. RESERVED.		

Section 1. PERFORMANCE CHECKS (Continued)

Subsection 5. DARC SYSTEM PERFORMANCE CHECKS

Performance Checks	*Reference Paragraph*	
	Standards & Tolerances	*Maintenance Procedures*
175. SYSTEM STATUS CONTROL (SSC)		TI 6160.14
Monthly.		
Run system status control (SSC) test	ERROR FREE	Par. 3.2
176. CONTROL PROCESSOR.		
Monthly.		
(1) Run RDS−500 diagnostics	ERROR FREE	Pars. 3.14.1 through 3.14.6
(2) Run control processor monitor (CPM) test	ERROR FREE	Par. 3.11
(3) Run extended memory test CXM	ERROR FREE	Par. 3.15
(4) Run supplementary processor board test	ERROR FREE	Par. 3.18
177. DISPLAY PROCESSOR (DP).		
Monthly.		
(1) Run RDS−500 diagnostics	ERROR FREE	Pars. 3.14.1 through 3.14.6
(2) Run refresh output controller (ROC) test	ERROR FREE	Par. 3.10
(3) Run supplementary processor board/display .. processor board test.	ERROR FREE	Par. 3.18
(4) Run modified input data selection test	ERROR FREE	Par. 3.19
(5) Run extended memory test	ERROR FREE	Par. 3.15
178. RADAR DATA DISTRIBUTION ..... UNIT (RDDU).		
Monthly.		
(1) Run modified input data selector ..... (MIDS) test	ERROR FREE	Par. 3.4
(2) Run radar Data Distribution Unit ..... (RDDU) test	ERROR FREE	Par. 3.9

Section 1. PERFORMANCE CHECKS (Continued)

Subsection 5. DARC SYSTEM PERFORMANCE CHECKS (Continued)

Performance Checks	*Reference Paragraph*	
	Standards & Tolerances	*Maintenance Procedures*
179. DARC STATUS PANEL AT SSC		
Monthly.		
Run Panel (PAN) test	ERROR FREE	Par. 3.7
180. TELEPRINTER (DEK AND IOTs).		
Monthly.		
Run data entry keyboard (DEK) test	ERROR FREE	Par. 3.5
181. RESERVED.		
182. DISK		TI 6160.39
Monthly.		
(1) Run internal DEDDS diagnostic	ERROR FREE	Par. 2.2.3.4
(2) Run extended DEDDS test F	ERROR FREE	Par. 2.2.3.3
183. LINE PRINTER (LP)		TI 6160.14
Quarterly.		
Run RDS−500 diagnostic line printer test	ERROR FREE	Par. 3.14.7
184. MAGNETIC TAPE DRIVE.		
Monthly.		
Run magnetic tape unit test	ERROR FREE	Par. 3.21
185. RADAR DATA DISTRIBUTION UNIT (RDDU).		PAMRI Hardware Technical Manual
a. Quarterly.		
(1) Run firmware diagnostics	Par. 82b(9)(a)	Par. 11.2
(a) SMP tests 1 through 21	Par. 82b(9)(a)1	Par. 11.2.2
(b) RDP tests 1 through 14	Par. 82b(9)(a)2	Par. 11.2.3

Section 1. PERFORMANCE CHECKS (Continued)

Subsection 5. DARC SYSTEM PERFORMANCE CHECKS (Continued)

Performance Checks	*Reference Paragraph*	
	Standards & Tolerances	*Maintenance Procedures*
(c) DCP tests 1 through 8	Par. 82b(9)(a)3	Par. 11.2.4
(d) DCU/RAPPI	Par. 82b(9)(a)4	Par. 11.2.5
186.–199. RESERVED.		

Section 1. PERFORMANCE CHECKS (Continued)

Subsection 6. DCC SYSTEM PERFORMANCE CHECKS

Performance Checks	*Reference Paragraph*	
	Standards & Tolerances	*Maintenance Procedures*
200. DISPLAY CHANNEL COMPLEX (DCC). (9020E SYSTEM)		
a. Monthly.		
Lamp and indicator checks on all elements and units.	Visual	
b. Quarterly. (See notes 1, 2, and 3)		DCC–5028 (DCC Baseline Test Plan)
(1) CCCH data entry; test 2, segment 01		Par. 4.2
(2) Lights and alarms; test 3, segment 02		Par. 4.3
(3) Full data blocks; test 5, segment 03		Par. 4.5
(4) Tabular data; test 6, segment 03		Par. 4.6
(5) Limited data blocks; test 8, segments 03 and 04.		Par. 4.8
(6) Line data; test 9, segments 03 and 04		Par. 4.9
(7) Single symbols; test 10, segments 03 and 04.		Par. 4.10
(8) Primary radar; test 13, segment 04		Par. 4.13
c. Annually. (See notes 1, 2, and 3)		DCC–5028 (DCC Baseline Test Plan)
(1) Display element capacity; test 17, segment 09.		Par. 4.17
(2) Storage element capacity; test 18, segment 10.		Par. 4.18
(3) Data base error detection; test 19, segment 11.		Par. 4.19
(4) CRD and PVD addressing; test 15, segment 05.		Par. 4.15
(5) RKM error detection; test 20, segment 12		Par. 4.20
(6) Test vector error processing; test 26, segment 15.		Par. 4.26

Section 1. PERFORMANCE CHECKS (Continued)

Subsection 6. DCC SYSTEM PERFORMANCE CHECKS (Continued)

Performance Checks	*Reference Paragraph*	
	Standards & Tolerances	*Maintenance Procedures*
NOTES: 1 Baseline tests 2, 4, 11, 12, 15, 16, 17, 24, 25, and 33 are performed after each DCC functional program tape release.		
2. Analysis of results of tasks (1) through (8) is a system performance specialist function.		
3. SCOPE 2 runs may be substituted for display channel complex maintenance (DCCMNT) segments 01 through 07.		
201. 7265 SYSTEM CONSOLE AND CONFIGURATION CONSOLE.		FEMM, MDM Manual
a. Semiannually.		
Diagnostic		MDM Manual
b. Annually.		
Thermal checks, limit to one power-down test per element.		
202. 7201–02 COMPUTE ELEMENT (CE)		FEMM, MDM Manual
a. Quarterly.		
(1) ROS tests and fault location tests (FLTs) marginal checks.		Page 3–1
(2) Diagnostics marginal checks		Page 3–1
b. Annually.		
(1) ROS optimization; bit plane pressure		Page 3–1
(2) Thermal checks, limit to one power-down test per element.		Page 51, MDM Manual
(3) Clock timing and distribution checks		Page 3–1
203. 7231–02 INPUT/OUTPUT CONTROL ELEMENT (IOCE).		FEMM, MDM Manual
a. Quarterly.		
(1) Checking circuit tests central processing unit/common logic unit (CPU/CLU).		Page 3–1
(2) Bias diagnostics (local storage)		Page 3–1

Section 1. PERFORMANCE CHECKS (Continued)

Subsection 6. DCC SYSTEM PERFORMANCE CHECKS (Continued)

Performance Checks	*Reference Paragraph*	
	Standards & Tolerances	*Maintenance Procedures*
(3) Bias diagnostics and FLTs (CPU/CLU)		Page 3–1
b. Semiannually.		
(1) Check ROS strobe and timing (SHMOO)		Page 3–1
(2) Timing and SHMOO (MACH)		Page 3–1
(3) Check ROS plan torque		Page 3–1
(4) Ripple BUMP		Page 3–1
(5) Ripple test maintenance and channel (MACH) storage.		Page 3–1
(6) Optimize ROS margin check (M/C) (special ROS ripple test).		Page 3–1
c. Annually.		
(1) Check local store strobe and timing		Page 3–1
(2) Check clock distribution		Page 3–1
(3) Thermal checks, limit to one power-down per element.		Page 3–1
204. 7251–09 STORAGE ELEMENT (SE)		FEMM, MDM Manual
a. Quarterly.		
(1) Operational limits check routine (SHMOO)		Par. 3.1
(2) Scope matrix switch driver output		Par. 3.1
b. Semiannually.		
(1) Check basic storage module (BSM) array temperatures.		FEMM, MDM Manual, Par. 3.4
(2) Check cycling of green indicator light for storage protect (SP) array heater.		Par. 3.4
(3) Check all storage protect arrays		Par. 3.4

Section 1. PERFORMANCE CHECKS (Continued)

Subsection 6. DCC SYSTEM PERFORMANCE CHECKS (Continued)

Performance Checks	*Reference Paragraph*	
	Standards & Tolerances	*Maintenance Procedures*
(4) Check all storage on system with D22A0 SHMOO routine, three passes. (Refer to par. 3.4, steps 9 through 13).		Par. 3.4, MDM Manual
(5) Check bias (6 V marginal) storage section, and SSU run without the delta noise check (refer to par. 3.4, steps 14 through 22).		Par. 3.4
(6) Run the complete D22A0, (use delta noise), D22A4 and D2308 diagnostics		Par. 3.4
205. 7289–04 DISPLAY ELEMENT (DE).		
a. Quarterly.		
(1) Limits check routine		Par. 3.3, MDM Manual
(2) Scope matrix switch and all other driver outputs.		Par. 3.3
b. Semiannually.		
(1) Check BSM array temperatures		Par. 3.4, MDM Manual
(2) Check cycling of green indicator		Par. 3.4
(3) Check all available DE SP 41		Par. 3.4
(4) Check all available DE BSMs		Par. 3.4
(5) Run all DE diagnostics		Par. 3.4
c. Annually.		
Thermal checks, limit to one power-down test per element		FEMM Manual, par. 3.2.6
206. 2701 ADAPTER UNIT		FEMM, MDM Manual
Quarterly.		
Run diagnostics B051, B052, and B0A1		Page C–1
207. 2821 INTERFACE CONTROL UNIT		FEMM, MDM Manual
Quarterly.		
Run diagnostics 6A51 through 6A57 and 6AA0		MDM Manual

Section 1. PERFORMANCE CHECKS (Continued)

Subsection 6. DCC SYSTEM PERFORMANCE CHECKS (Continued)

Performance Checks	*Reference Paragraph*	
	Standards & Tolerances	*Maintenance Procedures*
208. 2401 TAPE DRIVE		FEMM, MDM Manual
a. Bimonthly (Routine 0 Power On)		Par. 3.1.3
(1) Run tape interblock gap diagnostic		Par. 3.1.3
(2) Check preamps		Par. 3.1.3
(3) Check electrical skew on non-return to zero invert (NRZI) tape units.		Par. 3.1.3
(4) Run tape unit functional diagnostic		Par. 3.1.3
b. Quarterly.		
(1) Interchangeability		Par. 3.1.3
(2) Start-stop adjustments		Par. 3.1.3
(a) Rotate stop capstan rubber housing (models 2, 3, 5, and 6).		Par. 3.1.3
(b) Scope start-stop envelope and adjust as required.		Par. 3.1.3
(3) Check preamps, mechanical skew, read skew, time asymmetry.		Par. 3.1.3
(4) Check erase head operation		Par. 3.1.3
(5) Check auto degaussing circuit operation (models 4, 5, and 6).		Par. 3.1.3
(6) Run tape interblock gap and functional diagnostics.		Par. 3.1.3
c. Semiannually.		
(1) Check photolamp voltages		Par. 3.1.3
(2) Check dc voltages at standard modular system (SMS) panel (tape unit in write status).		Par. 3.1.3

Section 1. PERFORMANCE CHECKS (Continued)

Subsection 6. DCC SYSTEM PERFORMANCE CHECKS (Continued)

Performance Checks	*Reference Paragraph*	
	Standards & Tolerances	*Maintenance Procedures*
209. 1403 HIGH–SPEED PRINTER (HSP).....		FEMM Manual
Quarterly.		
Run D6351–D6356	Par. 79b(7)(a)	MDM Manual
210. 2540 CARD READER/PUNCH (CRP)		FEMM, MDM Manual
Quarterly.		
Run CRP diagnostics, D6251, D6261 and D6262 ..	Par. 79b(7)(b)	MDM Manual
211. CHANNEL–TO–CHANNEL ADAPTER		FEMM, MDM Manual
Quarterly.		
Run A051 diagnostic program under normal ..... and marginal voltages.		MDM Manual
212. 2314 DIRECT ACCESS STORAGE ..... FACILITY CONTROL UNIT.		Maintenance Procedures FEMM, MDM Manual
Annually.		
(1) Thermal checks, limit to one power down test per element.		
(2) Check transformer read-only storage (TROS) drive current.		
213. 2312 DISK DRIVE UNITS		FEMM, MDM Manual
a. Bimonthly.		
Disk diagnostics	Par. 79b(6)	Par. 3.1, MDM Manual
b. Semiannually.		
Check read/write head tracking, detent ..... gear adjustments, intermediate speed.		Par. 3.1
c. Annually.		
Check pack in place switch		FEMM Manual, par. 4.5, part 2, chapter 4

Section 1. PERFORMANCE CHECKS (Continued)

Subsection 6. DCC SYSTEM PERFORMANCE CHECKS (Continued)

Performance Checks	*Reference Paragraph*	
	Standards & Tolerances	*Maintenance Procedures*
214. RADAR KEYBOARD MULTIPLEXER (RKM).		
a. Quarterly		FAA–4025 (DCC RKM) FAA–4002 (SCOPE)
(1) R–console indicators check.		
(2) Check RKM commands SCOPE 2B.		
(3) RKM memory check.		
(4) R–console entry using SCOPE 2, DB8B3 with sense switch bit 23 set, or TSTP.		
(5) System maintenance monitor console.		
b. Semiannually.		
(1) Subsystem error checking.		
(2) RKM error reporting.		
(3) RKM Test Cart Test	ERROR FREE	Test Cart Executive Software User's Manual, FAA 7394
215. PLAN VIEW DISPLAY (PVD)		FAA–4002 (SCOPE) FAA–4026
a. Quarterly.		
PVD display — run section 3, D98B1, routines 7–10; SCOPE 2B; or the enhanced online test pattern (TSTP).		
b. As Required.		
(1) Display generator (DG) commands. Run section 3, D98B1, routines 1, 2, for 3 minutes.		
(2) DG error reporting — D98B1 and D98B6 including section 3, D98B1, routine 4.		
216.–219. RESERVED		

Section 1. PERFORMANCE CHECKS (Continued)

Subsection 7. AMCC SYSTEM PERFORMANCE CHECKS

Performance Checks	*Reference Paragraph*	
	Standards & Tolerances	*Maintenance Procedures*
220. RESERVED.		
221. MAINTENANCE SYSTEM PRINTER (MSP).		
Monthly.		
Run Diagnostics Program D7351 and D7352	ERROR FREE	FAA–4332, User's Manual

Section 1. PERFORMANCE CHECKS (Continued)

Subsection 8. DCCR SYSTEM PERFORMANCE CHECKS

Performance Checks	*Reference Paragraph*	
	Standards & Tolerances	*Maintenance Procedures*
222. PROCESSOR (9221–170)		
Quarterly	Par. 84b(1)	IBM 9221 Installing the system, S224–1770–04, Chapter 7, Page 1 and 2
(1) Extended Processor Test.		
(2) Processor and Input/Output Tests.		
(3) System Exerciser Test.		
223. PROCESSOR CONSOLE. PS/2 MODEL 57		
Quarterly.		
Perform power on self test	Par. 84b(2)	IBM 9221 Service Guide, S224–1768–04 Page 1–1
224. ESTABLISHMENT CONTROLLER 3174–21L		
Quarterly.		
Perform system exerciser test	Par. 84b(3)	IBM Installing the System, S224–1770–04, Chapter 7, Page 1 and 2
225. MULTI-SYSTEM CHANNEL COMMUNICATIONS UNIT (MCCU)		
Quarterly		
(1) Run system exerciser test and OLTS T3150S AND T3150STS 3083 to/from 9221.	Par. 84b(4)	IBM 9221 Installing the system, S224–1770–03 Chapter 7, Page 1 and 2
(2) Run CTC OLTS between 9221 processors	Par. 84b(4)	IBM 9221 Service Guide, S224–1768–04, Chapter 4, Page 1 and 2

Section 1. PERFORMANCE CHECKS (Continued)

Subsection 8. DCCR SYSTEM PERFORMANCE CHECKS (Continued)

Performance Checks	*Reference Paragraph*	
	Standards & Tolerances	*Maintenance Procedures*
226. TAPE CONTROL UNIT (TCU).		
Quarterly.		
Run system exerciser test and OLTS ..... T3490A.	Par. 84b(5)	IBM 9221 Installing the system, S224−1770−03 Chapter 7, Page 1 and 2
227. TAPE DRIVE (TD).		
a. Quarterly.		
Run system exerciser test and OLTS ..... T3480A.	Par. 84b(6)	IBM 9221 Installing the system, S224−1770−04 Chapter 7, Page 1 and 2
b. As Required.		
Perform maintenance on tape drive units as ..... requested by the LED message displayed on each drive.	N/A	IBM 3490 Magnetic Tape System Models A01, A02 and B04 Operator's Guide GA32−0126−0
228. REPLACEMENT I/O TERMINAL (RIOT).		
Quarterly.		
Perform power on self test.....	Par. 84b(7)	IBM 9221 Service Guide, S224−1768−04, Chapter 4, Page 1 and 2
229. DISPLAY CONTROLLER (DC).		
Quarterly.		
Run all diagnostics (TEST ID 0) or SCOPE ..... or DCCMNT D71D1 SEG 9 Test 17.	Par. 84b(8)	DCCR−1428, DCCR Operator's Manual, Section 9.4.2
230.−249. RESERVED.		

Section 1. PERFORMANCE CHECKS (Continued)

Subsection 9. DISPLAY SYSTEM REPLACEMENT PERFORMANCE CHECKS

Performance Checks	*Reference Paragraph*	
	Standards & Tolerances	*Maintenance Procedures*
250. MAIN DISPLAY MONITOR.		
Semiannually.		
Perform MDM Alignment Procedure.		TI 6160.51, (MDM Alignment Procedure)
251. RISC SYSTEM/6000 PROCESSOR, COMMON IN THE FOLLOWING DSR SUBSYSTEMS.		
• **System Analysis Recording (SAR) Processor/ Tape Rack**		
• **System Release Manager (SRM) Rack**		
• **Data Reduction and Analysis Rack**		
• **WARP/HAL Rack**		
• **LIU Rack**		
• **PCU Rack**		
• **BCP Rack**		
• **DSR Console**		
a. Quarterly.		
Perform POST. diagnostics.		TI 6160.53 Rack Mounted Components Hardware Technical Manual, Section 7 (Quick Check for RISC System/6000 Processing)
252. LCN BRIDGE PROCESSOR PS/2 MODEL 55 SX.		
Quarterly.		
Perform Bridge verification diagnostics.	Par. 86h	TI 6160.53 Rack Mounted Components Hardware Technical Manual, Section 6 (Bridge Verification).

Section 2. OTHER MAINTENANCE TASKS

Subsection 1. CCCH OTHER MAINTENANCE TASKS

(Refer to equipment instruction books for all reference paragraphs, figures and tables, unless otherwise indicated.)

Maintenance Task	*Reference Paragraph*	
	Standards & Tolerances	*Maintenance Procedures*
253.–266. RESERVED.		
267. 9672–RA4 PROCESSOR	IBM S/390 Service Guide	IBM S/390 Parts Catalog
Annually.		
Clean or exchange filters (3) as required in the 9672 Frame.		
268. HARDWARE MANAGEMENT CONSOLE ..... (HMC) AND SUPPORT ELEMENT (SE)	N/A	IBM S/390 Hardware Management Console Operations Guide
Monthly.		
Backup critical console data (HMC) and backup critcal data (SE)		
269. 3083 BX PROCESSOR SUBSYSTEM.		
a. Bimonthly.		
3087 Coolant distribution unit	3087 Maintenance Library Manual (MLM), vol. A06, chap. 3, page CDU30005	3087 MLM, vol. A06, chap. 3, page CDU30005
Check water flow.		
b. Quarterly.		
(1) 3083 Processor	3083 MLM, vol. A01, chap. 7, page PRM71005	3083 MLM, vol. A01, chap. 7, page PRM71005
(a) Clean or replace filters.		
(b) Check blower airflow and noise.		

Section 2. OTHER MAINTENANCE TASKS (Continued)

Subsection 1. CCCH OTHER MAINTENANCE TASKS (Continued)

Maintenance Task	*Reference Paragraph*	
	Standards & Tolerances	*Maintenance Procedures*
(2) 3082 Processor controller (PC)	3082 MLM, vol. A02, chap. 2, page PCM20005	3082 MLM, vol. A02, chap. 2, page PCM20005
(a) Clean or replace filter.		
(b) Check blower airflow and noise.		
(3) 3087 Coolant distribution unit (CDU)	3087 MLM, vol. A06, Chap. 3, page CDU30005	3087 MLM, vol. A06, chap. 3, page CDU30005
(a) Check for leaks.		
(b) Inspect and clean expansion tank strainer.		
c. Semiannually.		
(1) 3089 Power unit (PU)	3089 MLM, vol., J01, page PGM22015	3089 MLM, vol. J01, page PGM22015
(a) Lubricate motor generator assembly.		
(b) Cleaning and electrical checks of motor generator assembly.		
d. Annually.		
(1) 3083 Processor	3083 MLM, vol. A01, Chap. 7, page PRM71005	3083 MLM, vol. A01, chap. 7, page PRM71005
Check emergency and power off switches.		
(2) 3087 Coolant distribution unit	3087 MLM, vol. A06, chap. 3, page CDU30005	3087 MLM, vol. A06, chap. 3, page CDU30005
Demineralize and deionize system water.		
e. As required.		
3087 Coolant distribution unit	3087 MLM, vol. A06, chap. 3, page CDU30005	3087 MLM, vol. A06, chap. 3, page CDU30005
Back flush heat exchanger.		

Section 2. OTHER MAINTENANCE TASKS (Continued)

Subsection 1. CCCH OTHER MAINTENANCE TASKS (Continued)

Maintenance Task	*Reference Paragraph*	
	Standards & Tolerances	*Maintenance Procedures*
270. 3814 SWITCHING MANAGEMENT ..... SUBSYSTEM.	3814 Maintenance Information Manual (MIM), vol. 04, chap. 10, page 10–1	3814 MIM, vol.. 04, chap 10, page 10–1
Annually.		
(1) Clean or replace turbine filter –– 01P filter.		
(2) Reserved.		
(3) Clean or replace gate fan –– 01C filter.		
(4) Clean or replace gate fan –– 1H filter.		
271. 3803/3420 MAGNETIC TAPE EQUIPMENT ..	3803/3420 MLM/pf vol. 2, page 85–005	3803/3420 MLM/pf vol. 2, page 85–005
a. Bimonthly		
3803 Tape controller.		
Clean or replace filters.		
b. Quarterly.		
(1) 3420 Magnetic tape unit.		
(a) Lubricate door slide.		
(b) General cleaning.		
(c) Check/adjust capstan speed.		
(d) Check/adjust capstan tracking.		
(e) Check/adjust end-of-tape/beginning-of-tape (EOT/BOT).		
(f) Check/repair file protect pin.		
(g) Check/adjust power window.		
c. Semiannually.		
3803 Control unit.		
Check dc voltages — adjust as required.		

Section 2. OTHER MAINTENANCE TASKS (Continued)

Subsection 1. CCCH OTHER MAINTENANCE TASKS (Continued)

Maintenance Task	*Reference Paragraph*	
	Standards & Tolerances	*Maintenance Procedures*
d. Annually.		
(1) 3420 Magnetic tape unit.		
(a) Replace filters (cuno/pur).		
(b) Replace cleaner block.		
(c) Check belts.		
(d) Replace input filter.		
(e) Clean/replace cooling filter.		
(f) Clean air bearing.		
(g) Inspect door foam.		
(h) Check dc voltages.		
(i) Clean EOT/BOT.		
(j) Clean capstan.		
(k) Clean radius sense.		
(l) Check reel speed techometer.		
(m) Check glass bead tape.		
(n) Check/repair rewind plunger.		
(o) Check/replace automatic cleaner.		
(p) Check/adjust amplifiers.		
e. Every 3 Years.		
3420 Magnetic tape unit.		
Replace output filters		
f. Every 5 Years.		
(1) 3420 Magnetic tape unit.		
(a) Replace vacuum tubing.		

Section 2. OTHER MAINTENANCE TASKS (Continued)

Subsection 1. CCCH OTHER MAINTENANCE TASKS (Continued)

Maintenance Task	*Reference Paragraph*	
	Standards & Tolerances	*Maintenance Procedures*
(b) Replace pressure tubing.		
(c) Replace vacuum pressure switches.		
272. 3725 COMMUNICATIONS CONTROLLER	3725 MI, vol. A03, chap. 8 page 8–020	3725 MI, vol, A03, chap. 8 page 8–020
a. Semiannually.		
(1) Check cooling fan.		
(2) Check air filters and replace as necessary.		
b. Annually.		
Check line cord, plugs, terminals, and grounding.		
273. 4248 PRINTER EQUIPMENT	4248 MI, vol. 2, sec. 28 page 28–010	4248 MI, vol. 2, sec. 28 page 28–010
a. Daily.		
(1) Clean the printer		IBM GA24–3798
(2) Replace the ribbon and platen-wear strip as required.		
b. Weekly.		
(1) Clean the printer.		
(2) Check printer flight timing.		
(3) Replace the forms retention belts as required.		
(4) Replace the ribbon shield as required.		
c. Every 2-weeks.		
(1) Replace the vacuum cleaner bag as required.		
(2) Check the print band for worn characters.		
d. As Required.		
(1) General cover cleaning.		
(2) Clean or replace filters.		

Section 2. OTHER MAINTENANCE TASKS (Continued)

Subsection 1. CCCH OTHER MAINTENANCE TASKS (Continued)

Maintenance Task	*Reference Paragraph*	
	Standards & Tolerances	*Maintenance Procedures*
(3) Clean hammer unit oiler.		
274. DSR PRINTER CONTROL UNIT (DPCU).		
a. Monthly.		
(1) Flight Strip Printer.		
(a) Clean Thermal Print Head	None	Flight Strip Printer, Maintenance and Users Manual, FSP 960–300B Document No. A422632 Revised 08.10.99 (or later), Boca Systems
(b) Clean Rubber Drive Roller (Platen)	None	
(c) Clean Optical Device	None	
(d) Vacuum Interior (General Cleaning)	None	
275. ADAPTER UNIT (AU).		PAMRI Hardware Technical Manual
Annually.		
(1) Interior inspection cleaning and check of electrical connections.	N/A	Par. 6.3.1
(2) Clean exterior surfaces.	N/A	Par. 6.3.1
(3) Check power supplies.	Par. 75a(9)	Par. 6.4.1a
276. HOST INTERFACE DEVICE (HID).		
a. Weekly.		
Inspect fan	Visual	HNL Maintenance Handbook, Order 6031, Par. 100
b. Quarterly.		
Clean and inspect keyboards, monitors, and cabinet surfaces	Visibly Clean	HNL Maintenance Handbook, Order 6031, Par. 103
c. Semiannually.		
Clean and inspect tape drive	Visibly Clean	HNL Maintenance Handbook, Order 6031, Par. 104
277.–280. RESERVED.		

Section 2. OTHER MAINTENANCE TASKS (Continued)

Subsection 2. AIR TRAFFIC CONTROL COMPUTER (ATCC) SYSTEM OTHER MAINTENANCE TASKS

Maintenance Tasks	*Reference Paragraph*	
	Standards & Tolerances	*Maintenance Procedures*
281. FLIGHT DATA INPUT OUTPUT (FDIO).		
a. Monthly.		
(1) Flight Strip Printer.		TI 6130.6, vol. 1
(Wespercorp and Data Products)		
(a) Clean exterior.	None	Par. 6.4.7.1
(b) Vacuum interior	None	Par. 6.4.7.1
(c) Verify lamp lit	None	Par. 6.2.4
(2) Alphanumeric keyboard	None	TI 6130.6, vol. 1
(a) Clean exterior	None	Par. 6.4.6
(b) Verify lamp brightness control	None	Par. 6.2.3
(3) Cathode ray tube		TI 6130.6, vol. 1
(a) Clean exterior	None	Par. 6.4.5
(b) Clean screen	None	Par. 6.4.5
(c) Verify contrast	None	Par. 6.2.2
(d) Verify brightness	None	Par. 6.2.2
(4) Flight strip printer (IER)		TI 6130.6, vol. 1
Clean print head and platen	None	Par. 6.4.7.2.1
b. Quarterly.		
(1) Central Control Unit		TI 6130.6, vol. 1
Clean interior and exterior	None	Par. 6.4.1

Section 2. OTHER MAINTENANCE TASKS (Continued)

Subsection 2. AIR TRAFFIC CONTROL COMPUTER (ATCC) SYSTEM OTHER MAINTENANCE TASKS (Continued)

Maintenance Tasks	*Reference Paragraph*	
	Standards & Tolerances	*Maintenance Procedures*
(2) Printer Control Unit (Non DSR)		TI 6130.6, vol. 1
Clean interior and exterior	None	Par. 6.4.2
(3) Remote Control Unit		TI 6130.6, vol. 1
Clean interior and exterior	None	Par. 6.4.3
c. Semiannually.		
(1) Central Control Unit		TI 6130.6, vol. 1
Check power supply voltages	Par. 73b(1)	Par. 6.3.2
(2) Printer Control Unit (Non DSR)		TI 6130.6, vol. 1
Check power supply voltages	Par. 73b(2)	Par. 6.3.2
(3) Remote Control Unit		
Check power supply voltages	Par. 73b(3)	
(4) Flight Strip Printer (IER)		TI 6130.6, vol. 1
Clean cutter blade, blade-down sensor ..... and interior.	None	Par. 6.4.7.2.2
282. RESERVED.		
283. MODEM SPLITTER UNIT (MSU).		
Annually.		
(1) Interior inspection cleaning and check ..... of electrical connections.	N/A	Par. 6.3.1
(2) Clean exterior surfaces	N/A	Par. 6.3.1
284. NON–RADAR CHANNEL KEYBOARD ..... MULTIPLEXER (NRKM),		Section 6, NRKM Instruction Book
a. Quarterly.		
(1) Clean air filters or replace as necessary		Par. 6.3
(2) AC power monitor assembly testing		Par. 5.3

Section 2. OTHER MAINTENANCE TASKS (Continued)

Subsection 2. AIR TRAFFIC CONTROL COMPUTER (ATCC) SYSTEM OTHER MAINTENANCE TASKS (Continued)

Maintenance Tasks	*Reference Paragraph*	
	Standards & Tolerances	*Maintenance Procedures*
NOTE: Not required if unit is powered off.		
(3) Logic power supply testing		Par. 5.5
(4) Memory power supply testing		Par. 5.6
(5) Cleaning exterior, front door window		Par. 6.1
b. Semiannually.		
(1) I/O power supply testing		Par. 5.4
(2) Maintenance interlock checks.		
c. Annually.		
Inspection and cleaning (interior)		Par. 6.2
285. RESERVED.		
286. COMPUTER UPDATE TEST CART.		
a. Weekly.		Test Equipment Console Digital Tape Transport Model 9800, EEM 6160.1, Chap 217 (latest version)
(1) Clean transport		Par. 4.2.2
(2) Visual Check		Par. 4.2.3
b. Quarterly.		Computer Display Channel Test Equipment Console Type FA−7929
DC power supply checks		Section 6
c. Annually.		Test Equipment Console Digital Tape Transport Model 9800, EEM 6160.1, Chap 217 (latest version)
Periodic inspection checks, tape transport (adjust only if necessary).		Par. 4.6, table 4−1

Section 2. OTHER MAINTENANCE TASKS (Continued)

Subsection 2. AIR TRAFFIC CONTROL COMPUTER (ATCC) SYSTEM OTHER MAINTENANCE TASKS (Continued)

Maintenance Tasks	*Reference Paragraph*	
	Standards & Tolerances	*Maintenance Procedures*
287. COMPUTER UPDATE EQUIPMENT (CUE). . .		Section 7, CUE Power Supplies Instruction Book
a. Quarterly.		
(1) CRD power supplies; low and high voltage . . .	Par. 73f(2)(a)	Section 7, CUE Instruction Book NRCRD, table 7–3
(2) Clean keyboards and Quick Action Panels		Section 6, pars. 4.0 through 4.5
(3) NRCRD inspection and cleaning		NRCRD Instruction Book, par. 5.3
b. Semiannually.		
(1) CLU power supply	Par. 73f(1)(e)	CUE Power Supplies Instruction Book
(2) Inspect and clean CLU and CLUPs		Section 6, pars. 4.6 and 4.7
(3) Printed circuit board (PCB) test jig		Test Jig Instruction Book
Task		
(a) Inspect and clean front and sloping panels.		
(b) Inspect and clean. TB1 –– TB3. PC load boards. Card basket. Interval wiring/harness. Adapter connectors.		
(c) Perform electrical check. PCBs (A7–A9) and lamps (DS1––DS80).		

Section 2. OTHER MAINTENANCE TASKS (Continued)

Subsection 2. AIR TRAFFIC CONTROL COMPUTER (ATCC) SYSTEM OTHER MAINTENANCE TASKS (Continued)

Maintenance Tasks	*Reference Paragraph*	
	Standards & Tolerances	*Maintenance Procedures*
c. As required.		
Clean NRCRD face plate.		
288.–299. RESERVED.		

Section 2. OTHER MAINTENANCE TASKS (Continued)

Subsection 3. RESERVED

Maintenance Task	*Reference Paragraph*	
	Standards & Tolerances	*Maintenance Procedures*
300.–324. RESERVED.		

Section 2. OTHER MAINTENANCE TASKS (Continued)

Subsection 4. CDC OTHER MAINTENANCE TASKS

Maintenance Task	*Reference Paragraph*	
	Standards & Tolerances	*Maintenance Procedures*
325. COMPUTER ENTRY TESTER (CET)		CDC CET Instruction Book, Section 6
a. Quarterly.		
Front panel inspection and cleaning		Par. 6.1
b. Semiannually.		
Power Supply	Par. 5.1	Par. 5.1
c. Annually.		
Interior inspection and cleaning		Table 6–3
326. RESERVED.		
327. DISPLAY CONTROL AND VECTOR GENERATOR (DCVG) TESTER.		CDC Radar Channel Equipment and Radar Display Subsystem, DCVG Tester Instruction Book, Section 6
a. Quarterly.		
(1) Power Supply		Par. 5
(2) Front panel inspection and cleaning		Par. 6.1
(3) Card reader cleaning		Par. 6.2
b. Annually.		
Interior inspection and cleaning.		
328. OPERATION AND MAINTENANCE SUPPORT STATION (OMSS).		
a. Monthly.		
(1) OMSS control panel visual inspection		CDC OMSS, Cabinet Maintenance Manual and Power Supplies, Section 5, par. 3.2
(2) Visually inspect cabinet blowers		Par. 3.5
b. Quarterly.		

Section 2. OTHER MAINTENANCE TASKS (Continued)

Subsection 4. CDC OTHER MAINTENANCE TASKS (Continued)

Maintenance Task	*Reference Paragraph*	
	Standards & Tolerances	*Maintenance Procedures*
(1) Synchronous tape transport		Read/Write Magnetic Tape Transport Instruction Book, Section 6
(a) Check skew, tracking and speed, readjust.		Pars. 6.6.7 and 6.6.8
(b) Clean tape cleaners		Par. 6.6.6.2
(2) Check filter, clean and replace as required		CDC, OMSS, Cabinet Maintenance Manual and Power Supplies, Section 5, par. 3.5
(3) Visually inspect and check power supply		Par. 3.3
(4) Visually inspect power distribution power.		
(5) Check, and as required, readjust power supply voltages.		Par. 3.4
c. Semiannually.		
(1) Inspect and clean all cabinets/units		Par. 3
(2) Perform peripheral bus switch PM		CDC OMSS Peripheral Bus Switch Instruction Book, Section 4
(3) Check head wear, replace as required.		
329. INPUT/OUTPUT CONTROL (IOC)		CDC Radar Channel Equipment CDC Systems Instruction Book, Vol. II, Section 7
a. Monthly.		
(1) DPSS (central) clock operational check	N/A	Par. 2.4.2.1
(2) I/O Power supply operational tolerance, check, and adjustment.	Par. 77c(4)	Par. 2.3.3.2
b. Quarterly.		
(1) Logic power supply	Par. 77c(1)	Par. 2.3.2

Section 2. OTHER MAINTENANCE TASKS (Continued)

Subsection 4. CDC OTHER MAINTENANCE TASKS (Continued)

Maintenance Task	*Reference Paragraph*	
	Standards & Tolerances	*Maintenance Procedures*
(2) Central clock power supply, power amplifier adjustments.	N/A	Par. 2.4.2.2
(3) Cleaning exterior	N/A	Par. 2.5.1
(4) Clock-user power supply	Par. 77c(6)	Par. 2.3.4
c. Semiannually.		
(1) I/O power supply full alignment and distribution check.	Par. 77c(4)	Par. 2.3.3.3
(2) Clean air filters and replace as required	N/A	Par. 2.5.4
d. Annually.		
(1) Interior inspection cleaning, and check of electrical connections.	N/A	Par. 2.5.2
(2) System timing	Par. 77c(9)	Pars. 2.4.2.4, 2.4.2.5, and 2.4.2.6
330. PLAN VIEW DISPLAY (PVD) COMPUTER READOUT DISPLAY.		RCRD Instruction Book
a. Quarterly.		
(1) RCRD inspection and cleaning (interior)	Visual	Par. 5.2
(2) RCRD check and adjustment	Par. 77c(12)	Par. 6.0
b. As Required.		
Clean the RCRD faceplate (exterior)	Visual	Par. 5.1
331. REFRESH MEMORY CONTROL (RMC).		CDC Radar Channel Equipment CDC Systems Instruction Book, Vol. II, Section 7
a. Monthly.		
I/O power supply operating tolerance check and adjustment.	Par. 77c(4)	Par. 2.3.3.2
b. Quarterly.		
(1) Logic power supply	Par. 77c(1)	Par. 2.3.2

Section 2. OTHER MAINTENANCE TASKS (Continued)

Subsection 4. CDC OTHER MAINTENANCE TASKS (Continued)

Maintenance Task	*Reference Paragraph*	
	Standards & Tolerances	*Maintenance Procedures*
(2) Clean exterior	N/A	Par. 2.5.1
c. Semiannually.		
(1) I/O power supply full alignment and distribution check.	Par. 77c(4)	Par. 2.3.3.3
(2) Clean air filter or replace as required	N/A	Par. 2.5.4
d. Annually.		
(1) Interior inspection cleaning and check of electrical connections.	N/A	Par. 2.5.2
(2) System timing	Par. 77c(9)	Par. 2.4.2.5
332. REFRESH MEMORY INPUT/OUTPUT CONTROL (RMIOC)		CDC Radar Channel Equipment CDC Systems Instruction Book, Vol. II, Section 7
a. Monthly.		
I/O power supply operating tolerance check and adjustment.	Par. 77c(4)	Par. 2.3.3.2
b. Quarterly.		
(1) Clock user power supply	Par. 77c(6)	Par. 2.3.4
(2) Logic power supply testing	Par. 77c(1)	Par. 2.3.2
(3) Cleaning exterior	N/A	Par. 2.5.1
c. Semiannually.		
(1) I/O power supply full alignment and distribution check.	Par. 77c(4)	Par. 2.3.3.3
(2) Clean air filters or replace as required	N/A	Par. 2.5.4
d. Annually.		
(1) Refresh clock timing adjustment	Par. 77c(9)	Par. 2.4.3.1
(2) Interior inspection cleaning and check of electrical connections.	N/A	Par. 2.5.2

Section 2. OTHER MAINTENANCE TASKS (Continued)

Subsection 4. CDC OTHER MAINTENANCE TASKS (Continued)

Maintenance Task	*Reference Paragraph*	
	Standards & Tolerances	*Maintenance Procedures*
333. REFRESH MEMORY (RM)		CDC Radar Channel Equipment CDC Systems Instruction Book, Vol. II, Section 7
a. Monthly.		
I/O power supply operating tolerance check and adjustments.	Par. 77c(2)	Par. 2.3.3.2
b. Quarterly.		
(1) Memory power supply testing	Par. 77c(7)	Par. 2.3.5
(2) Cleaning exterior surfaces	N/A	Par. 2.5.1
c. Semiannually.		
(1) I/O and logic power supply full alignment and distribution connections.	Par. 77c(2)	Par. 2.3.3.3
(2) Clean air filters or replace as required	N/A	Par. 2.5.4
d. Annually.		
(1) Refresh clock timing adjustments	Par. 77c(9)	Par. 2.4.3.2
(2) Interior inspection cleaning and check of electrical connections.	N/A	Par. 2.5.2
334. BUFFER MEMORY (BM).		CDC Radar Channel Equipment CDC Systems Instruction Book, Vol. II, Section 7
a. Monthly.		
I/O and logic power supply operating tolerance check and adjustment.	Par. 77c(8)	Par. 2.3.3.2
b. Quarterly.		
(1) Memory power supply testing	Par. 77c(7)	Par. 2.3.5
(2) Clean exterior surfaces	N/A	Par. 2.5.1
c. Semiannually.		

Section 2. OTHER MAINTENANCE TASKS (Continued)

Subsection 4. CDC OTHER MAINTENANCE TASKS (Continued)

Maintenance Task	*Reference Paragraph*	
	Standards & Tolerances	*Maintenance Procedures*
(1) I/O and logic power supply full alignment .... and distribution check.	Par. 77c(8)	Par. 2.3.3.3
(2) Clean air filter or replace as required	N/A	Par. 2.5.4
d. Annually.		
(1) System clock and other timing adjustments ...	Par. 77c(9)	Par. 2.4.2.6
(2) Interior inspection cleaning and check of ..... electrical connections.	N/A	Par. 2.5.2
335. RADAR KEYBOARD MULTIPLEXER ..... (RKM)		CDC Radar Channel Equipment CDC Systems Instruction Book, Vol. II, Section 7
a. Monthly.		
I/O power supply operating tolerance check ..... and adjustment.	Par. 77c(4)	Par. 2.3.3.2
b. Quarterly.		
(1) Logic power supply testing	Par. 77c(1)	Par. 2.3.2
(2) Memory power supply testing	Par. 77c(7)	Par. 2.3.5
(3) Clean exterior	N/A	Par. 2.5.1
c. Semiannually.		
(1) I/O and logic power supply full alignment .... and distribution check.	Par. 77c(4)	Par. 2.3.3.3
(2) Clean air filters or replace as required	N/A	Par. 2.5.4
d. Annually.		
(1) Timing adjustments	Par. 77c(9)	Par. 2.4.3.8.1
(2) Interior inspection cleaning and check of ..... electrical connections.	N/A	Par. 2.5.2
336. HIGH–SPEED FILTER (HSF).....		CDC Radar Channel Equipment CDC Systems Instruction Book, Vol. II, Section 7

Section 2. OTHER MAINTENANCE TASKS (Continued)

Subsection 4. CDC OTHER MAINTENANCE TASKS (Continued)

Maintenance Task	*Reference Paragraph*	
	Standards & Tolerances	*Maintenance Procedures*
a. Monthly.		
I/O power supply operating tolerance check ..... and adjustment.	Par. 77c(4)	Par. 2.3.3.2
b. Quarterly.		
(1) Logic power supply testing	Par. 77c(1)	Par. 2.3.2
(2) Clean exterior	N/A	Par. 2.5.1
(3) Clock-user power supply check	Par. 77c(6)	Par. 2.3.4
c. Semiannually.		
(1) I/O and logic power supply full alignment ... and distribution check.	Par. 77c(4)	Par. 2.3.3.3
(2) Clean air filters or replace as required	N/A	Par. 2.5.4
d. Annually		
(1) System clock and other timing adjustments ...	Par. 77c(9)	Pars. 2.4.2.4, 2.4.2.5, and 2.4.2.6
(2) Interior inspection cleaning and check of ..... electrical connections.	N/A	Par. 2.5.2
337. CONFIGURATION CONTROL MONITOR ..... (CCM).		CDC Radar Channel Equipment CDC Systems Instruction Book, Vol. II, Section 7
a. Monthly.		
I/O power supply operating tolerance check ..... and adjustment.	Par. 77c(4)	Par. 2.3.3.2
b. Quarterly.		
(1) Logic power supply testing	Par. 77c(1)	Par. 2.3.2
(2) Clean exterior	N/A	Par. 2.5.1
c. Semiannually.		
(1) I/O power supply full alignment and ..... distribution check.	Par. 77c(4)	Par. 2.3.3.3

Section 2. OTHER MAINTENANCE TASKS (Continued)

Subsection 4. CDC OTHER MAINTENANCE TASKS (Continued)

Maintenance Task	*Reference Paragraph*	
	Standards & Tolerances	*Maintenance Procedures*
(2) Clean air filters or replace as required	N/A	Par. 2.5.4
d. Annually.		
(1) Timing adjustments	Par. 77c(9)	Par. 2.4.3.9.3
(2) Interior inspection cleaning and check of ..... electrical connections.	N/A	Par. 2.5.2
338. DISPLAY GENERATOR (DG)		CDC Radar Channel Equipment CDC Systems Instruction Book, Vol. II Section 7
a. Monthly.		
I/O power supply operating tolerance check	Par. 77c(5)	Par. 2.3.3.2
b. Quarterly.		
(1) Logic power supply testing.	Par. 77c(3)	Par. 2.3.2
(2) Clean exterior	N/A	Par. 2.5.1
c. Semiannually.		
(1) I/O and logic power supply full alignment .... and distribution check.	Par. 77c(5)	Par. 2.3.3.3
(2) Clean air filters or replace as required	N/A	Par. 2.5.4
d. Annually.		
Interior inspection cleaning and check of ..... electrical connections.	N/A	Par. 2.5.2
339. CENTRAL PROCESSOR (CP)		CDC Radar Channel Equipment CDC Systems Instruction Book, Vol. II, Section 7
a. Monthly.		
I/O power supply operating tolerance check	Par. 77c(4)	Par. 2.3.3.2
b. Quarterly.		
(1) Logic power supply testing	Par. 77c(1)	Par. 2.3.2

Section 2. OTHER MAINTENANCE TASKS (Continued)

Subsection 4. CDC OTHER MAINTENANCE TASKS (Continued)

Maintenance Task	*Reference Paragraph*	
	Standards & Tolerances	*Maintenance Procedures*
(2) Clean exterior	N/A	Par. 2.5.1
(3) Clock user power supply check	Par. 77c(6)	Par. 2.3.4
c. Semiannually.		
(1) I/O and logic power supply full alignment and distribution check.	Par. 77c(4)	Par. 2.3.3.3
(2) Clean air filters or replace as required	N/A	Par. 2.5.4
d. Annually.		
(1) System clock and other timing adjustments	Par. 77c(9)	Par. 2.4.3.5
(2) Interior inspection cleaning and check of electrical connections.	N/A	Par. 2.5.2
340. RESERVED.		
341. PVD		PVD Instruction Book
a. Monthly.		
Clean PVD face plate exterior	N/A	Section 6, Par. 5.1
b. Quarterly.		
(1) Clean and/or replace upper and lower filters.	N/A	
(2) PVD check and alignment	Par. 77c(11)	Section 7, par. 6.2
(3) PVD inspection	N/A	Section 6, pars. 5.3 and 5.4
(4) Lubricate PVD tracks, and hinges with teflon spray lubrication NSN 9150−00−989−2012 or equivalent.	N/A	Section 6, par. 7
342. CDC SYSTEM TIMING		CDC Radar Channel Equipment CDC Systems Instruction Book, Vol. II, Section 7
Annually.		
(1) Distribution	Par. 77c(9)	Par. 2.4.2.5

Section 2. OTHER MAINTENANCE TASKS (Continued)

Subsection 4. CDC OTHER MAINTENANCE TASKS (Continued)

Maintenance Task	*Reference Paragraph*	
	Standards & Tolerances	*Maintenance Procedures*
(2) Sine buffer	Par. 77c(9)	Par. 2.4.2.4
(3) Gated converter buffer	Par. 77c(9)	Par. 2.4.2.6
(4) Delay circuit check	Par. 77c(9)	Par. 2.4.2.7
343.–399. RESERVED.		

Section 2. OTHER MAINTENANCE TASKS (Continued)

Subsection 5. DARC OTHER MAINTENANCE TASKS

Maintenance Task	*Reference Paragraph*	
	Standards & Tolerances	*Maintenance Procedures*
400. SYSTEM STATUS CONTROL (SSC)		Reference Manual TI 6160.23
a. Monthly.		
(1) Check ac power control panel.		
(2) Check cabinet control panel.		
(3) Check system status panel.		
b. Quarterly.		
(1) Check blower fans and clean air filter		Reference Manual TI 6160.16
(2) Check power supply	Par. 82c(1)	
c. Semiannually.		
(1) Check cable connectors.		
(2) Check and clean cabinet interior and exterior.		
401. CONTROL PROCESSOR		Reference Manual TI 6160.3
a. Monthly.		
(1) Check ac power control.		
(2) Check control panel.		
b. Quarterly.		
(1) Check RDS−500 and cabinet blower fans.		
(2) Clean air filter.		
(3) Check power supplies	Par. 82c(2)	TI 6160.3 and TI 6160.16
c. Semiannually.		
(1) Check cable connectors.		
(2) Check and clean cabinet interior and exterior.		

Section 2. OTHER MAINTENANCE TASKS (Continued)

Subsection 5. DARC OTHER MAINTENANCE TASKS (Continued)

Maintenance Task	*Reference Paragraph*	
	Standards & Tolerances	*Maintenance Procedures*
402. DISPLAY PROCESSOR (DP)		Reference Manual TI 6160.4
a. Monthly.		
(1) Check ac power panel.		
(2) Check control panel.		
b. Quarterly.		
(1) Check RDS−500 and cabinet blowers.		
(2) Clean air filter.		
(3) Check +5 and −15 V dc power supplies	Par. 82c(3)	
c. Semiannually.		
(1) Check cable connectors.		
(2) Check and clean cabinet interior and exterior.		
403. RESERVED.		
404. RADAR DATA DISTRIBUTION UNIT (RDDU)		PAMRI Hardware Technical Manual
Annually.		
(1) Interior inspection cleaning and check of electrical connections	N/A	Par. 6.3.1
(2) Clean exterior surfaces	N/A	Par. 6.3.1
(3) Check power supplies	Par. 82c(5)	Pars. 6.4.2 and 5.2
405. LINE PRINTER		Reference TI 6160.40
Monthly.		
(1) Visual inspection.		
(2) Clean exterior.		

Section 2. OTHER MAINTENANCE TASKS (Continued)

Subsection 5. DARC OTHER MAINTENANCE TASKS (Continued)

Maintenance Task	*Reference Paragraph*	
	Standards & Tolerances	*Maintenance Procedures*
406. DEK AND IOT		Reference TI 6160.40
Monthly.		
Check and clean exterior.		
407. RESERVED.		
408. RESERVED.		
409. PRINTED CIRCUIT BOARD (PCB) TESTER.		The latest edition of TI 6160.5A
Semiannually.		
(1) Perform tasks listed in table 5–1 and 5–2 of TI 6160.5A.		
(2) Perform tasks listed in table 5–3 of TI 6160.5A	Par. 82c(4)	
410. MAGNETIC TAPE UNIT		TI 6160.35
Weekly.		
Head cleaning		Par. 5.1.1
411. RADAR KEYBOARD MULTIPLEXER (RKM) (REQUIRED ONLY AT FACILITIES HAVING DCCR EQUIPMENT).		RKM Instruction Book, Section 6
a. Monthly.		
I/O power supply operating tolerance check and adjustment.	Par. 82c(6)	Par. 5.3
b. Semiannually.		
(1) I/O power supply full alignment and distribution check.	Par. 82c(6)	Table 6–3
(2) Clean air filters or replace as required	N/A	Par. 6

Section 2. OTHER MAINTENANCE TASKS (Continued)

Subsection 5. DARC OTHER MAINTENANCE TASKS (Continued)

Maintenance Task	*Reference Paragraph*	
	Standards & Tolerances	*Maintenance Procedures*
412. DISPLAY GENERATOR (DG) (REQUIRED ... ONLY AT FACILITIES HAVING DCCR EQUIPMENT).		DG Instruction Book, Section 6
a. Monthly.		
I/O power supply operating tolerance check ..... and adjustment.	Par. 82c(8)	Par. 5.3
b. Quarterly.		
(1) Logic power supply testing	Par. 82c(7)	Par. 5.4
(2) Clean exterior	N/A	Par. 6.1
c. Semiannually.		
(1) I/O and logic power supply full alignment .... and distribution check.	Par. 82c(7) & (8)	Table 6–3
(2) Clean air filters or replace as required	N/A	Par. 6
413.–449. RESERVED.		

Section 2. OTHER MAINTENANCE TASKS (Continued)

Subsection 6. DCC OTHER MAINTENANCE TASKS

Maintenance Task	*Reference Paragraph*	
	Standards & Tolerances	*Maintenance Procedures*
450. 7265 SYSTEM CONSOLE AND CONFIGURATION CONSOLE.		FEMM Manual
a. Semiannually.		
Visual check, clean filters, fans, and floor under system console and configuration console.		
b. Annually.		
(1) Clean equipment; and lubricate power tub fans.		
(2) Check, and as required, tighten electrical connections (power supplies, distribution and internal grounds).		
(3) Power supply checks		Pages 24 and 3–1
451. 7201–02 COMPUTE ELEMENT (CE).		FEMM Manual
a. Semiannually		Page 3–1
(1) Clean filters, fans, and floor. Visual check and check blower CBs.		
(2) Power supply checks		Page 3–1
b. Annually.		
Check, and as required, tighten electrical connections (power supplies, distribution and internal grounds).		
452. 7231–02 INPUT/OUTPUT CONTROL ELEMENT (IOCE).		FEMM Manual
a. Semiannually		Page 3–1
(1) Clean filters, fans, and floor. Visual check and check blower CBs.		
(2) Power supply checks.		
b. Annually		Page 3–1

Section 2. OTHER MAINTENANCE TASKS (Continued)

Subsection 6. DCC OTHER MAINTENANCE TASKS (Continued)

Maintenance Task	*Reference Paragraph*	
	Standards & Tolerances	*Maintenance Procedures*
Check, and as required, tighten electrical connections (power supplies, distribution and internal grounds).		
453. 7251–09 STORAGE ELEMENT		FEMM Manual
a. Semiannually.		
(1) Clean filters, fans, and floor. Visual check .... and check blower CBs.		Par. 3.3
(2) Power supply checks		Par. 3.4
b. Annually.		
Check, and as required, tighten electrical connections (power supplies, distribution and internal grounds).		
454. 7289–04 DISPLAY ELEMENT (DE).		FEMM Manual
a. Semiannually.		
(1) Clean filters, fans, and floor. Visual check		Par. 3.3
(2) Power supply checks		Par. 3.3
b. Annually.		
Check, and as required, tighten electrical connections (power supplies, distribution and internal grounds).		
455. 2701 DATA ADAPTER UNIT (DAU).		FEMM Manual
a. Semiannually.		
(1) Clean filters, fans, and floor. Visual check		Page C–1
(2) Power supply checks		Page C–1
b. Annually.		
Check, and as required, tighten electrical connections (power supplies, distribution and internal grounds).		
456. 2821 INTERFACE CONTROL UNIT		FEMM Manual

Section 2. OTHER MAINTENANCE TASKS (Continued)

Subsection 6. DCC OTHER MAINTENANCE TASKS (Continued)

Maintenance Task	*Reference Paragraph*	
	Standards & Tolerances	*Maintenance Procedures*
a. Semiannually.		
(1) Clean filters, fans, and floor. Visual check .... and check blower CBs.		Page 3–1
(2) Power supply checks		Page 3–1
b. Annually		FEMM Manual
Check, and as required, tighten electrical ..... connections (power supplies, distribution and internal grounds).		Page 3–1
457. 2803 TAPE CONTROL UNIT (TCU)..		Page 3–1
a. Semiannually.		
(1) Clean filters, fans, and floor. Visual check and check blower CBs.		
(2) Power supply checks.		
b. Annually.		
Check, and as required, tighten electrical connections (power supplies, distribution and internal grounds).		
458. 2401 TAPE DRIVE.		
a. Weekly		Pages 3–3 and 3–4
Clean tape drives.		
b. Bimonthly (Routine 0 Power OFF).		
(1) Capstan motors (Models 2, 3, 5, and 6).		
(2) Prolays.		
(3) General cleaning.		
c. Quarterly.		
Routine 1 (Power OFF).		
d. Semiannually		FEMM Manual

Section 2. OTHER MAINTENANCE TASKS (Continued)

Subsection 6. DCC OTHER MAINTENANCE TASKS (Continued)

Maintenance Task	*Reference Paragraph*	
	Standards & Tolerances	*Maintenance Procedures*
Routine 2 (Power OFF).		
e. Annually.		
Routine 3 (Power OFF).		

NOTES:
1. Bimonthly preventive maintenance (routine 0) to be scheduled in groups of tape units.
2. Routine 0 may be omitted during months that routine 1 is performed.
3. Routine 1 should be scheduled to coincide with routine 2. Combine the "power on" and "power off" sections.
4. Lightly lubricate screw threads and shaft of 200-position connector any time the signal cables are disconnected from the tape unit. Use IBM 6.

459. 1403 HIGH–SPEED PRINTER (HSP).....		FEMM Manual
a. Weekly.		
(1) Clean and vacuum print chain. Use ..... cleaner paper. Clean gate and front area of printer.		Page 3–1
(2) Check for correct ribbon skew		Page 3–1
(3) Fill right oil reservoir in T casting IBM 6 ...		Page 3–1
b. Quarterly.		
(1) Ribbon reverse		Page 3–1
(2) Ribbon drive unit		Page 3–1
(3) Ribbon drive gear reduction housing		Page 3–1
(4) Auxiliary ribbon correction		Page 3–1
(5) Chain drive		Page 3–1
(6) Form cart		Page 3–1
c. Semiannually.		
(1) Hammer		Page 3–1
(2) Strip residual		Page 3–1
(3) Hammer unit blower		Page 3–1

Section 2. OTHER MAINTENANCE TASKS (Continued)

Subsection 6. DCC OTHER MAINTENANCE TASKS (Continued)

Maintenance Task	*Reference Paragraph*	
	Standards & Tolerances	*Maintenance Procedures*
(4) Chain		Page 3–1
(5) Drum		Page 3–1
(6) Tractor feed		Page 3–1
(7) Stacker		Page 3–1
(8) Carriage read		Page 3–1
(9) Hydraulic unit		Page 3–1
(10) 6–8 line drive		Page 3–1
(11) Frame T-casting phenolic support check		Page 3–1
460. 2540 CARD READER PUNCH		FEMM Manual
a. Quarterly.		
(1) Punch feed (minor)		Page 3–2
(2) Geneva (minor)		Page 3–2
(3) Read feed (minor)		Page 3–2
(4) File feed (minor)		Page 3–2
(5) Stacker transport (minor)		Page 3–2
(6) Geneva (major)		Page 3–2
(7) Punch unit (see note)		Page 3–2
b. Semiannually.		
(1) Stacker transport (major)		Page 3–3
(2) Emitter and mach timing		Page 3–3
(3) Drive motor		Page 3–3
(4) Base		Page 3–3
(5) Punch feed (major)		Page 3–4
(6) Geneva		Page 3–4

Section 2. OTHER MAINTENANCE TASKS (Continued)

Subsection 6. DCC OTHER MAINTENANCE TASKS (Continued)

Maintenance Task	*Reference Paragraph*	
	Standards & Tolerances	*Maintenance Procedures*
(7) Punch unit		Page 3–4
c. Annually.		
Punch unit		Page 3–4

NOTE: All frequency figures for time, throughput, and power on are based upon the following average usages:

Cards punched — 675,000 per month (135,000 clutch operations per month).

Card read — 2,100,000 per month (700,000 clutch operations per month).

Machine power-on hours — 335 hours per month.
Punch and punch feed running time — 50 hours per month.

Read feed running time — 60 hours per month.

Frequency of maintenance should be adjusted for each unit if machine usage varies from the above, using whichever frequency occurs first.

461. 2314 DIRECT ACCESS STORAGE ..... FACILITY		FEMM Manual
a. Quarterly.		
Clean blowers and filters.		
b. Semiannually.		
Voltage checks.		
c. Annually.		
Check, and as required, tighten electrical connections (power supplies, distribution and internal grounds).		
462. 2312 DIRECT ACCESS STORAGE ..... FACILITY CONTROL UNIT.		FEMM Manual
a. Biweekly.		
Disk drive inspections.		
b. Quarterly.		
Disk drive lubrication, racks and pinions, actuator, carriage rollers ways, head load latch and chain.		

Section 2. OTHER MAINTENANCE TASKS (Continued)

Subsection 6. DCC OTHER MAINTENANCE TASKS (Continued)

Maintenance Task	*Reference Paragraph*	
	Standards & Tolerances	*Maintenance Procedures*
c. Semiannually		FEMM Manual
(1) Disk pack locking shaft, head loading linkage, cam follower pivots.		
(2) Inspect the hydraulic oil dump valve and change as required.		
(3) Inspect the hydraulic oil filter and change as required.		
d. Annually.		
(1) Disk pack brake stop time.		
(2) Clean base, disk pack cover.		
(3) Disk pack filter.		
463. CHANNEL–TO–CHANNEL ADAPTER		FEMM Manual
Semiannually.		
Check voltages.		
464. RADAR KEYBOARD MULTIPLEXER ..... **(RKM).**		RKM Instruction Book, Section 6
a. Monthly.		
I/O power supply operating tolerance check and adjustment.	Par. 79b(9)(c)	Par. 5.3
b. Quarterly.		
(1) Logic power supply testing	Par. 79b(9)(b)	Par. 5.4
(2) Memory power supply testing	Par. 79b(9)(d)	Par. 5.5
(3) Clean exterior	N/A	Par. 6
c. Semiannually.		

Section 2. OTHER MAINTENANCE TASKS (Continued)

Subsection 6. DCC OTHER MAINTENANCE TASKS (Continued)

Maintenance Task	*Reference Paragraph*	
	Standards & Tolerances	*Maintenance Procedures*
(1) I/O and logic power supply full alignment and distribution check.	Par. 79b(9)(c)	Table 6–3
(2) Clean air filters or replace as required	N/A	Par. 6
d. Annually.		
(1) Timing adjustments	Par. 79b(9)(e)	Par. 5.5.1
(2) Interior inspection cleaning and check of electrical connections.	N/A	Par. 6
465. DISPLAY GENERATOR (DG)		DC Instruction Book, Section 6
a. Monthly.		
I/O power supply operating tolerance check	Par. 79b(10)(c)	Par. 6 and Order 6160.1, chap 292, CHG 314, Appendix 9
b. Quarterly.		
(1) Logic power supply testing	Par. 79b(10)(b)	Par. 5.4
(2) Clean exterior	N/A	Par. 6.1
c. Semiannually.		
(1) I/O and logic power supply full alignment and distribution check.	Pars. 79b(10)(b) and 79b(10)(c)	Table 6–3
(2) Clean air filters or replace as required	N/A	Par. 8
d. Annually.		
Interior inspection cleaning and check of electrical connections.	N/A	Table 6–5
466. PLAN VIEW DISPLAY (PVD)		PVD Instruction Book
a. Monthly.		
Clean PVD face plate exterior	N/A	Section 6, par. 5.1
b. Quarterly.		

Section 2. OTHER MAINTENANCE TASKS (Continued)

Subsection 6. DCC OTHER MAINTENANCE TASKS (Continued)

Maintenance Task	*Reference Paragraph*	
	Standards & Tolerances	*Maintenance Procedures*
(1) Clean and/or replace upper and lower filters.	N/A	
(2) PVD check and alignment	Par. 79b(11)	Section 7, par. 6.2
(3) PVD inspection	N/A	Section 6, pars. 5.3 and 5.4
(4) Lubricate PVD tracks, and hinges with teflon spray lubricant NSN 9150−00−989−2012 or equivalent.	N/A	Section 6, par. 7
467. PLAN VIEW DISPLAY (PVD) COMPUTER READOUT DISPLAY.		RCRD Instruction Book
a. Quarterly.		
(1) RCRD inspection and cleaning (interior)	Visual	Par. 5.2
(2) RCRD check and adjustment	Par. 79b(12)	Par. 6.0
b. As Required.		
Clean the RCRD faceplate (exterior)	Visual	Par. 5.1
468. COMPUTER ENTRY TESTER (CET).		CET Instruction Book, Section 6
a. Quarterly.		
Front panel inspection and cleaning		Par. 6.1
b. Semiannually.		
Power supply	Par. 5.1	Par. 5.1
c. Annually.		
Interior inspection and cleaning		Table 6−3
469. RESERVED.		
470. DISPLAY CONTROL AND VECTOR GENERATOR (DCVG) TESTER.		Radar Channel Equipment and Radar Display Subsystem, DCVG Tester Instruction Book, Section 6

Section 2. OTHER MAINTENANCE TASKS (Continued)

Subsection 6. DCC OTHER MAINTENANCE TASKS (Continued)

Maintenance Task	*Reference Paragraph*	
	Standards & Tolerances	*Maintenance Procedures*
a. Quarterly.		
(1) Power supply	Par. 5.1	Par. 5.1
(2) Front panel inspection and cleaning		Par. 6.1
(3) Card reader cleaning		Par. 6.2
b. Annually.		
Interior inspection and cleaning		Table 6–3
471. INPUT/OUTPUT TYPEWRITER (IOT) (1052).		FEMM Manual, page 2–1
Quarterly.		
(1) Inspection 1 through 4.		
(2) Lubrication.		
(3) Check cycle clutch and operational shaft end-play; adjust and lubricate.		

Section 2. OTHER MAINTENANCE TASKS (Continued)

Subsection 7. AMCC OTHER MAINTENANCE TASKS

Maintenance Task	*Reference Paragraph*	
	Standards & Tolerances	*Maintenance Procedures*
472. RESERVED.		
473. MAINTENANCE SYSTEMS PRINTER.		TI 6160.19
a. Weekly.		
Visual inspection	Visual	TI 6160.19
b. Monthly.		
Clean printer	Visual	TI 6160.19
c. Quarterly.		
Lubrication	Visual	TI 6160.19

Section 2. OTHER MAINTENANCE TASKS (Continued)

Subsection 8. DCCR OTHER MAINTENANCE TASKS

Maintenance Task	*Reference Paragraph*	
	Standards & Tolerances	*Maintenance Procedures*
474. PROCESSOR (9221–170).		
Annually.		
Battery backup unit test	N/A	IBM 9221 Service Guide, S224–1768–04, Appendix 1, Page F1
475. PROCESSOR CONSOLE PS/2 MODEL 57.		
Monthly.		
Save processor console configuration	N/A	IBM 9221 Service Guide, S224–1768–04, Chapter 2, Page 2–97
476. DISPLAY CONTROLLER (DC)		DC Instruction Book
a. 5 Volt Power Supply	Par. 84b(8)(a)	
b. 12 Volt Power Supply	Par. 84b(8)(b)	
477. PLAN VIEW DISPLAY (PVD)		PVD Instruction Book
a. Monthly.		
Clean PVD face plate exterior	N/A	Section 6, par. 5.1
b. Quarterly.		
(1) Clean and/or replace upper and lower filters.	N/A	
(2) PVD check and alignment	Par. 84b(9)	Section 7, par. 6.2
(3) PVD inspection	Par. 84b(9)	Section 6, pars. 5.3 and 5.4
478. PLAN VIEW DISPLAY (PVD) COMPUTER READOUT DISPLAY		
a. Quarterly.		
(1) RCRD inspection and cleaning (interior)	Visual	Par. 5.2
(2) RCRD check and adjustment	Par. 84b(10)	Par. 6.0

Section 2. OTHER MAINTENANCE TASKS (Continued)

Subsection 8. DCCR OTHER MAINTENANCE TASKS (Continued)

Maintenance Task	*Reference Paragraph*	
	Standards & Tolerances	*Maintenance Procedures*
b. As Required.		
Clean the RCRD faceplate exterior	Visual	Par. 5.1

Section 2. OTHER MAINTENANCE TASKS (Continued)

Subsection 9. DSR OTHER MAINTENANCE TASKS

Maintenance Task	*Reference Paragraph*	
	Standards & Tolerances	*Maintenance Procedures*
479. IBM 3490 MAGNETIC TAPE SUBSYSTEM, COMMON IN THE FOLLOWING DSR RACKS.		
• **System Analysis Recording (SAR) Processor/ Tape**		
• **System Release Manager (SRM)**		
• **Data Reduction and Analysis (DR&A)**		
a. Semiannually.		
Clean tape heads.		IBM 3490 Magnetic Tape Subsystem Enhanced Capability Models C10, C11, and C22 Maintenance Information Manual
b. As Required.		
Perform maintenance on tape subsystem . . . . . as requested by the LED message displayed on each drive.		IBM 3490 Magnetic Tape Subsystem Enhanced Capability Models C10, C11, and C22 Maintenance Information Manual
480. SEMAPHORE ST–3013 NETWORK ENCRYPTION UNIT (NEU).		
• **The NEU is housed in the SRM rack**		
a. As Required.		
Replace Battery.		TI 6160.53, par. 5.10
481. MAIN DISPLAY MONITOR.		
a. As Required.		
Clean Monitor Surface (exterior).	Visual	TI 6160.51, DSR Console Hardware Technical Manual, Section 5.
482.–490. RESERVED.		

CHAPTER 5. SYSTEM MAINTENANCE PROCEDURES

491. GENERAL.

This chapter establishes the procedures for accomplishing the various essential maintenance activities which are required for the NAS En Route Stage A — Air Traffic Control System, on either a periodic or incidental basis. The chapter is divided into three sections. The first section describes the procedures to be used in making the performance checks listed in chapter 4, section 1. The second section describes the procedures for doing the tasks listed in chapter 4, section 2. The third section describes the procedures for doing special tasks, usually non-scheduled and not listed in chapter 4. Refer to the latest edition of Order 6000.15 for additional general guidance.

492. REMOTE SUPPORT FACILITY OPERATIONS FOR THE 9672–RA4 PROCESSOR.

a. Background.

(1) As delivered by the manufacturer, the IBM 9672–RA4 Hardware Management Console (HMC) is configured with a modem and Remote Support Facility (RSF) software. If the RSF function is enabled and a telephone line is provided, the HMC can automatically dial out to the IBM RSF to report hardware malfunctions as they occur and an IBM service engineer may dial in to observe system operation or download software to the HMC.

(2) There are operational concerns with this remote support function. For example, the ability to remotely push new software to the HMC has the potential to impair the government's configuration management of the system.

b. Policy. HMC communications shall be strictly regulated by both software and hardware controls.

(1) Software controls.

(a) Inbound calls. The call-in feature of the HMC's RSF shall be disabled and the modem shall be configured to not answer incoming calls.

(b) Outbound calls. The "call home" feature shall only be initiated via CCCH operator or technician intervention, as opposed to automatic dialing.

(2) Hardware controls. The modem shall be physically disconnected from the telephone line at all times with one exception: the modem shall only be connected to the telephone line to permit an authorized "call home" and disconnected immediately after completion of the call.

(3) Procedure. The operator shall respond to an alert informing him/her that the system needs to "call home". The responsible party shall collect applicable ref codes, LRU numbers, card locations and other pertinent information from appropriate details panels, and notify the NOM. A service call shall be placed to IBM service and the collected information forwarded to the service representative following local site procedures. If deemed necessary by the IBM service representative, the telephone line may be connected and appropriate HMC panels may be configured to permit the "call home". Once the call has been completed, the operator or technician shall physically disconnect the telephone line from the modem and reset the appropriate HMC screens to their original configuration.

(4) Conditions. The call home shall not be permitted from an HMC which is connected to a 9672 running operational NAS. The call home shall only occur from a standby or offline system. When a non–severe hardware error occurs, a switchover will not automatically occur and the system will remain online and operational. In this case, the site shall follow local procedures to either place a voice service call in the usual fashion or perform a manual switchover at an appropriate time to permit a call home from the standby or offline system.

c. Responsibilities.

(1) The ARTCC Security Administrator shall periodically check to insure that the telephone line to the 9672 HMC is physically disconnected unless the system is using the line in response to a service "call home" situation.

(2) The ARTCC CCCH computer operator or technician shall contact the NOM upon notification by the system that it has detected a hardware anomaly and must "call home".

(3) The ARTCC CCCH computer operator or technician may connect the HMC's modem to the phone line and configure the appropriate HMC software screens to permit the call if determined to be necessary by an authorized IBM service representative. Once the transfer of data is complete, the computer operator must disconnect the telephone line from the modem and reset the appropriate HMC software screens to their original configuration.

493.–499. RESERVED.

Section 1. PERFORMANCE CHECK PROCEDURES

500. GENERAL.

a. Objective. This section conveys basic rationale, performance checking procedures, and other guidance essential to the technical certification of the services, systems, and equipment provided by the NAS En Route Stage A — Air Traffic Control (ATC) System, a large-scale, complex system providing automation capability in support of the FAA air traffic control mission.

b. Certification Rationale.

(1) The automated NAS ARTCC is a large-scale, complex macrosystem, composed of several large, functionally different systems, each interfaced with and controlled by the same CCCH. Together, they support the large number of flight data processing (FDP) and radar data processing (RDP) tasks required to accomplish the ATC function at the NAS ARTCCs.

(2) The major functional groupings or modules include: the air traffic control computer (ATCC), the CCCH, the radar data acquisition and transfer (RDAT), the radar data entry and display (RDED), the flight data entry and display (FDED), and a central system maintenance monitor console (SMMC) capability. The intrinsic redundancies designed into each of the major systems provide high reliability operation. Direct access radar channel (DARC) has been added to permit operation during central computer and display processor combined outages, or when display processor only is out of service.

(3) Physically, the total system is typified by large distances separating its external sensors from the human interfaces within the ARTCC. There are hundreds of interface devices and equipment within the center's multilevel building, in addition to the radar and terminal equipment external to the ARTCC.

(4) The macrosystem must also be viewed as more than a large hardware/software system. It also includes hundreds of controllers at their sector displays and operating positions, the live air traffic being controlled, and the maintenance staff that monitors system operation and repairs systems/equipment that fail. The operational software system with its complex executive program, provides additional insight into the intrinsic complexities involved. Additionally, the software is normally under improvement and/or change, as required, to meet evolving air traffic control needs.

(5) Complete, comprehensive verification of the total functional capability of this large-scale, complex system would require many hours of rigidly structured and scripted testing procedures. For this reason, performance checking is performed at several levels in the total system hierarchy.

(6) The real-time, automation-assisted, air traffic control environment at the ARTCCs imposes severe time constraints on the certification activities that might be utilized by Airway Facilities personnel. However, the requirement still exists for the technical experts to provide positive assurance to the user that the automation service is indeed a safe, certified service.

(7) In the vast complex comprising the total NAS automation capability, the physical separation of the major systems imposes a technical judgement load upon the certifier that substantially exceeds the demands made upon the certifiers of other systems. It is, therefore, not prudent to place uninhibited reliance upon the human element when establishing the guidelines for large-scale, complex system certification.

(8) The use of predefined general procedures will assure validation of all selected critical performance parameters. They can be designed to minimize the time required for completion of the performance checking.

(9) Certification (or recertification) of the total automation services, and the major subsets of the total automation services, shall be accomplished using the nationally approved procedures provided herein. These procedures are intended as guidance in support of minimum certification requirements. Additional actions may be taken at the discretion of the system certifier. Additional actions should consider potential impacts on ATC operations versus performance information to be gained. All online performance checking should be fully coordinated with the Air Traffic Watch Supervisor.

(10) The mandatory procedures in this section emphasize verification of hardware and software system error detection and reporting capability. They also provide sufficient indications of normal system responses to system input data so that a certification

decision can be readily achieved. The procedures encompass various methods of:

(a) Accuracy checking of aircraft position data from radar data acquisition systems serving each center and the displayed symbology at the controller's display;

(b) Checking the tracking functions, including hazard warning capabilities:

(c) Checking the real-time quality control (RTQC) functions:

(d) Checking the error detection and reporting capabilities and the normal system printouts provided during system operation. System reconfiguration and control capabilities are also fully exercised.

(11) Procedures are included for use with offline CCCH, DCCR, CDC, and DARC system performance verification. They utilize diagnostic software provided for each of these systems. The performance of separate elements of the hardware systems can be reverified offline, using these basic procedures.

(12) Specific certification techniques available at all the NAS ARTCCs include the NAS certification tape (NSCT), NAS online certification tape (OLCT). Use of any one will permit functional verification that the operational hardware and software can process and display flight and radar data as required to support the real-time ATC mission. NSCT is an offline technique precluding operational use of the automation system. OLCT or online certification (OLC) permits certification of the automation system while being used to control air traffic. OLC is a special purpose module added to the NAS operational program. A functional description and some general procedural guidance for operational use of the OLC program is included in this order.

c. Levels of Certification.

(1) Service Level. This level of certification encompasses the composite flight data processing (CFAD), the composite radar data processing (CRAD), and the direct access radar channel radar data processing (DRAD) services provided by the NAS En Route Stage A — Air Traffic Control System, made up of the automation hardware and software systems. This level of certification is the final level and requires that the next lower level of certification be current.

(2) System Level. This level of certification provides the basis for the service level certification. In turn this level of certification is, in part, based on the element/equipment level of certification. The following systems require system level certification.

(a) CCCH KVDT, CTS, CUE, IFDS (ATCC).

(b) CDC, DCCR, DCC, or DSR with displays (RDED).

(c) CCCH.

(d) DARC with displays (RDED backup).

(e) Reserved.

(f) External Systems. En Route ARTCC radar and beacon systems as well as the ARTCC communication systems are certified in accordance with provisions of the applicable technical handbook.

(3) Element and Equipment Level. Element and equipment certification is the lowest certification level. All higher levels of certification, in part, are based on this certification level. Element and equipment certification is included within the system involved. The certification entry to be made in the facility maintenance log can be a single entry stating that the system is certified or entries for each individual element or equipment can be made. The elements and equipments of the following systems require certification at this level.

(a) CCCH (3083BX) or (9672RA4)

(b) DCC (9020E)

(c) DCCR

(d) CDC

(e) DARC

(f) DSR

d. Certification Responsibility.

(1) General. Certification responsibility will be assigned to appropriate technical personnel in accordance with the requirement in the latest edition of Order 3400.3, Airway Facilities Maintenance Personnel Certification Program.

(2) Certification Responsibilities. Certification responsibility designations included in the certification parameter tables are for general guidance only. It is recognized that circumstances will

arise that will necessitate special designations by the sector manager of other personnel having sufficient and appropriate expertise to perform technical certification of service and system performance. Special designees must comply with the requirements in the latest edition or Order 3400.3.

e. Basic Guidelines.

(1) Service Level Certification.

(a) Periodic recertification of the CFAD and CRAD automation service following a complete shutdown of the NAS operational system shall include the use of the online certification capability available (OLCT or OLC). If system patches or other conditions prevent proper operation using these techniques, service certification should be attempted using manual alternate techniques described herein. Every effort should be made to correct the condition. Sufficient details should be documented to support further investigation and early correction. When CFAD and CRAD operation is scheduled to continue for more than one 24-hour operational period, the daily certification requirements shall be met using the most efficient techniques available on site, selecting from the entire repertoire, ranging from OLC through the manual online procedures, as dictated by the real-time situation at the ARTCC.

(b) Situations may arise in which the diagnostics used to verify element or system operation do not cycle completely error-free, and the element/system appears to be accepted by the NAS operational program. In such cases, the NAS operations manager, using such technical expertise as necessary, will determine the performance/certification status of the elements or systems involved. As soon as practicable, the affected elements/systems shall be removed from the operational system for corrective action if appropriate. If other fault conditions are found which, in the judgement of the NAS operations manager and the technical staff, do not derogate the service provided to the users, then the elements/systems need not be decertified. The conditions found and actions taken shall be fully documented in the facility maintenance log for future analysis.

(c) The DRAD certification requires the use of manual technique to verify that the radar coverage, radar accuracy, display accuracy, radar data processing and tracking, video presentation, and radar data transfer are operating satisfactorily.

(2) System Level Certification.

(a) ATCC, CCCH, RDED (CDC, DCC, DCCR, or DSR)

1 Use of OLC, including the complete reconfiguration module, will provide a rapid check of the overall system.

2 Loop-around patching can be utilized for checkout of the adjacent centers and ARTS interfacility data systems to avoid undue coordination delays.

3 Realistic evaluation of the input capability from internal ARTCC or remote site devices requires human intervention at the input device when the NAS operational program is cycling.

4 Functional checkout of the input capability at remote locations that are not staffed during ARTCC certification activities can be accomplished by the remote site technician during the next scheduled shift. Verification can be accomplished using the test device (TD) message in the NAS operational program. In this situation the remote site technician should advise the NAS operations manager concerning the results of site certification actions taken. Remote en route airway facility personnel should notify the NAS operations manager whenever the remote facility equipment operational or certification status changes.

5 Radar data processing (RDP) real-time quality control (RTQC) of the radar input data from all serving radar facilities is a very important functional capability required for system performance analyses on a real-time basis. Data counts, status messages, RTQC test target messages (beacon and search), missing data conditions, registration and collimation analysis, as well as bias error correction are some of the most significant front-end input data processing capabilities that must be verified for the general RDP functional area of the NAS automation system.

6 At the controller interface, it is important to verify that the situation display will provide operationally satisfactory display of all class types of data, along with acceptable video presentation quality, properly aligned and formatted, as well as satisfactory radar console control operation for controller system use. Verification of RDP functions such as tracking and conflict alert are also accomplished to certify the system functional contributions to the total NAS en route automation capability.

(b) RDED (DARC backup). There are no automated procedures for the certification of this

system; therefore, manual checks are required to verify the input/output typewriters, the line printers, the interface to the CCCH, transfer of data to and from the radar controller, radar data processing and tracking, reconfiguration, and display quality and accuracy.

(3) Element and Equipment Level Certification. This level of certification consists of verifying the certification and/or key performance parameters of each element or equipment, and making the system certification log entry, once all elements or equipments have been verified. If an individual element or equipment is being certified due to restoration following a failure, a certification entry for the element or equipment is to be made in the facility log.

501. PERFORMANCE CHECKING.

a. General. A substantial portion of the Airway Facility (AF) maintenance mission is dedicated to the determination of the performance status of the overall functional capability or service being provided to the user. In a large-scale complex system, performance checking can be accomplished at several levels in the total system hierarchy. Some performance checking is accomplished online by the operational software, and some must be accomplished offline using subsystem maintenance programs, equipment diagnostic programs or structured maintenance procedures. Predefined performance tests were developed during the integration phase of automation deployment. A subset of these tests was selected for periodic performance checks of the automation system. Periodic use of these procedures sets the desired confidence level in system performance, allowing faster, more limited tests to be used to meet certification responsibilities of the maintenance staff of the ARTCC facility. Performance checking also reinforces the AF technician's understanding of the system, which helps reduce the time to repair and restore the system to full operational capability.

b. Procedures. Procedures for performing various levels of performance checks are available in other NAS system documentation such as: the FAA−4000 series of maintenance operating manuals, the 9020 maintenance diagnostic manuals, the CDC offline maintenance program manuals and other similar documentation. It is not the purpose of a maintenance technical handbook to issue duplications of system, subsystem, or equipment level documentation. It is the responsibility of the entire AF staff to utilize these documents to support hardware performance checking as required in this directive. Unique, specialized procedures not suitable for inclusion in lower level documentation are included to standardize performance checking actions, promote better repeatability, and facilitate trend analysis, as well as support certification.

502. RECERTIFICATION REQUIREMENTS RELATED TO OPERATIONAL PROGRAM PATCHES.

a. General. Where ATC has determined that a patch (or patches) must be made to the adaptation data to meet their immediate operational requirements, the NAS operations manager shall determine the need for and initiate overall service or partial recertification actions if needed. ATC shall be advised of certification status changes, if any changes are made. Where ATC has determined that a functional change or functional addition patch must be introduced into the system as an emergency "fix" or to meet immediate operational requirements, the NAS operations manager shall determine the need for overall service or partial recertification of the NAS automation system, and initiate action as appropriate to the decision. The circumstances surrounding the use of patches not included in a system build shall be fully documented in the facility maintenance log.

b. Limitations. Successful recertification of the CFAD/CRAD automation services after loading of a patch in the operational program or the adaptation data base shall not be considered to be a certification of the patch itself. Recertification actions can only be expected to reverify the functional capabilities they are designed to check. Recertification of the NAS automation system cannot be expected to serve as a substitute for thorough functional testing of the patch(es), nor can it be expected to verify the changes expected from use of the patch(es).

503. RESERVED.

504. CERTIFICATION FOLLOWING RESTORATION ACTIONS.

a. Service. Service recertification is required before resumption of ATC operation following total functional lapse of operational processing, i.e., when attempted startovers, startups with rescue, and startups without rescue (cold starts) all fail to restore functional processing. In the event that recovery was achieved after the trouble has been positively identified, and isolated, the NAS operations manager, with the support of the ATC system user and technical staff, shall determine the need for partial or complete ser-

vice recertification. Recertification, if required, may be accomplished using selected manual procedures or modules of OLC.

b. Systems. A system failure that results in the total loss of service to the user and requires corrective maintenance to restore, shall be recertified before restoration to operational use. Recertification of the system is not required in those cases where recovery is accomplished by reconfiguration or isolation of failed elements or equipment from the system. Nor will an initial program load (with or without rescue), require recertification of the system. The recertification, when required, should be accomplished by verification of the parameters specified in appendix 1 of this order for the system involved. The certification status of the system shall be entered in the facility maintenance log.

c. Elements and Equipment. Recertification of failed elements and equipment removed from the system, either automatically or manually, is required. Checking may be accomplished using the applicable performance checks, diagnostic programs, and other maintenance procedures to verify that the key performance parameters and/or the certification parameters are met. The certification status of the element or equipment shall be entered into the facility maintenance log.

505. CERTIFICATION STATUS OF THE CDC WITH THE CCM DISABLED.

a. General. The configuration control monitor (CCM) is the only CDC unit providing certain essential hardware element monitoring and automatic reconfiguration functions for the CDC system. Occasions arise when the CDC is operating normally and the CCM is disabled. Under these circumstances, the certification status and continued use of the CDC system is a matter of concern to both Air Traffic and the Airway Facilities staff. This guidance is intended to clarify this situation.

b. System Impact. Operation without the CCM should be fully considered by the AF staff because the CDC is unable to reconfigure. It should be noted that hardware error detection logic and error reporting lines are completely isolated from the Reconfiguration Subsystem. The software error detection capability remains effective when the CCM is disabled. System confidence testing remains operational and continually verifies data accuracy. The CDC, operating satisfactorily without the CCM, can be expected to fail as the result of the first error detected by the software which requires reconfiguration. Recovery and restoration can be time-consuming because a manual trial and error process must be invoked to isolate and remove the faulty unit.

c. Certification Status. If the CDC is operating normally and fully certified when the CCM becomes disabled, the certification status of the CDC must be changed because the original full system no longer exists. The CDC must either be decertified or its status changed to the "partial certification condition." Partial certification, "CDC Certified Except CCM Disabled" shall be used IF (in the certifier's best technical judgment) the CDC can be expected to provide required and reliable lesser services to the user. If the CDC system cannot be expected to support partial certification status, ATC must be advised that certification is being removed for the entire CDC and that transition to alternate ATC procedures will be necessary while repairs and recertification actions are completed. Should the decision be made to remove certification of the CDC system, the log entry should state the reasons for the removal.

d. Responsibility for Certification Change Decision. The most current information on the performance condition of each of the facilities using CDCs is only available to the AF staff and the users of the system. Therefore, the decision to continue operation of the total CDC system without the CCM is best made at the affected facility. If the AF technical staff is confident that the CDC can be expected to function properly for a period of time which will allow ATC's immediate operational requirements to be met, its certification status must be changed to partial, and a facility log entry made as follows: "CDC Certified except CCM disabled." At this time, the Assistant Air Traffic Control Chief on duty must be advised of the exception associated with operation of the CDC without the CCM. It must be made clear that operation under these conditions will make recovery from CDC fault conditions a much longer process and may force transition to alternate procedures with no advance warning. It is recommended that the AF staff increase its observation of the CDC systems' observation so that corrective action can be initiated without delay. Additional actions, coordinated with AT, may be taken as appropriate to facilitate possible transition to alternate ATC procedures.

e. Recertification of the CCM. Prior to restoration to service, the CCM shall be recertified. This will normally be accomplished by using the test equipment console to run the CCM box tape (see appendix 1, section 7b of this order). However, there may be occasions when operational requirements and the type of

failure would allow recertification by verifying the reconfiguration capability. An example of a case where recertification using the CCM box tape would not be required:

The CCM is disabled (due to a power supply failure) during a heavy traffic period. The system continues to provide the CRAD service. The power supply is replaced, and there is no reason to believe any other problem exists in the CCM. The CCM is activated with no problem. In cases similar to this, the CCM may be recertified by successfully performing selected unit reconfigurations. However, the CCM box tape should be run as soon as the system can be released for maintenance.

506. ONLINE CERTIFICATION (OLC) DATA REQUIREMENTS.

a. Objective. To define the minimum data requirements for the online certification program simulation files needed to verify the performance of the NAS services and systems.

b. General. The online certification program provides the NAS operations manager with a highly flexible, online means of verifying the certification parameters of the services and systems, on a selectable basis. The certification files used for online certification are generated using the simulator (SIM) program followed by use of the verification post processor program. These files are identical to the files generated by the simulation program except for the block of data added to the end of the header record. These files include the data necessary to assist the NAS operations manager in verification of the CFAD, CRAD, ATCC, and RDED, certification parameters specified in appendix 1 of this order.

c. CFAD Service. The data file requirements for the CFAD certification consists of the input messages necessary to verify the flight data processing and the input/output capability of the systems. The minimum requirements are listed below.

(1) Start Notification. Send a GI message to all devices, stating that CFAD certification has started.

(2) Device Response. Input an ISGN message from the NAS operations manager KVDT to verify that all required devices are available.

(3) Flight Data Processing. Input a few flight plans. These should be input to the system from ARTS, center A and D positions, KVDT, or card reader. The flights should represent traffic originating or landing within a sector's airspace; overflights; flights originating or landing at ARTS sites. The simulated flight plans shall be such that strip printing within the center will be initiated.

(4) KVDT. Test all KVDT using the GI and TD messages addressed to each KVDT. The GI messages must include the position identification (C1, E1, etc.), logical device number (LDN) (200, 204, etc.), and device address (8D, 3F, etc.).

(5) FSP. Exercise selected ARTCC FSPs using the TD message. The selected FSPs should be located at sectors that are normally active during low traffic periods.

(6) IFDS (ARTS, FDIO, NAS TO NAS). The TR message shall be included to elicit response from the adjacent facilities. If certification is performed when the adjacent facility is not operational, a normal response will not be received from that facility. Certification should be performed by manual entry of the TR message as soon as practicable after the adjacent facility becomes operational.

(7) CUE. Include TD messages to cause display of the CRD test pattern at the A and D sector positions. Also include invalid messages that cause the Sector number, logical device number, and computer readout device number to be written on the A and D position CRD. If the NAS monitor DBUG bit to cause automatic message acknowledgment is used, it should be set for the shortest possible time interval. This should be coordinated with the air traffic user, because real messages will automatically be acknowledged.

(8) Reconfiguration. The required reconfigurations may be performed manually if desired.

(a) Reconfigure an active NRKM to standby. Then, after verification of processing on the spare, reconfigure the system back to normal.

(b) Reconfigure at least one major element in the CCCH system to allow verification of this function.

(c) Reconfigure processors in PCUs, CCUs, and/or DSR PCUs.

(9) End Notification. Input a GI message to all devices, stating that CFAD certification has been completed.

d. CRAD Service. The data file requirements for the CRAD certification consist of the input messages

necessary to verify the radar data processing and tracking; data display and entry; video presentation; system error detection, analysis and correction capability. Simulated radar, beacon, weather, and symbol data is displayed on situation displays to verify that data can be processed and displayed correctly. Also, the RTQC, conflict alert, minimum safe altitude warning, and tracking features of the operational program are verified.

(1) Start Notification. Input a GI message to all devices, stating that CRAD certification has been started.

(2) RTQC Program Verification.

(a) Data Count Parameter. Include verification of each of the following data count parameters (reference NAS–MD–310, section 4.0):

Type of Control	Parameter	Description
SD[1]	BERC	Beacon Returns
CD[2]	EICM	Incomplete Messages
CD	EIVB	Invalid Messages
CD	EIVM	Nonbeacon Messages w/Invalid Labels
SD	NCRC	Nonvalidated Mode C Checking Returns
SD	NRRC	Nonreinforced Beacon Returns
SD	NVRC	Nonvalidated Mode 3/A Beacon Returns
SD	PRRC	Primary Returns
CD	TRPC	Transmission Parity Error Count

[1]SD = a special parameter (dynamic)
[2]CD = a center parameter (dynamic)

Checking is accomplished by forcing data count printouts and/or inducing error conditions. Printout is forced by lowering the parameter to a value near the lower limit of its range. Errors can be induced by using the message card specifying overlap conditions.

(b) Status Message. Include capability to verify that change in status will produce an appropriate status message. The message card can be used to induce a status change.

(c) RTQC Test Target (Beacon). Include capability to verify that out-of-tolerance beacon RTQC test target parameters will produce an appropriate error message printout. The message card should be used to introduce out-of-tolerance conditions in the mode 3/A code, altitude, range, and azimuth fields of the RTQC test message. After checking for proper response to error conditions, introduce RQTC test messages with in-tolerance conditions to verify normal operation.

(d) RTQC Test Target (Search). Include capability to verify that out-of-tolerance search RTQC test target parameters will produce an appropriate error message printout. The message card can be used to introduce out-of-tolerance conditions in the runlength, range and azimuth fields of the RTQC test message. After checking for proper response to error conditions, introduce RTQC test messages with in-tolerance conditions to verify normal operation.

(e) Missing Data Conditions. Include capability to verify that missing beacon and search data, status messages and beacon/search RTQC test messages will generate the appropriate NAS operational program error printouts. Correct the error conditions and verify that error printouts are no longer output.

(f) Registration. Include capability to verify that this portion of the RTQC program will correctly calculate registration errors, and provide an accurate indication of the magnitude of the error in the printout to the NAS operations manager. Using CSITE cards, introduce a range error of 0.5 nautical mile and an azimuth error of 9 ACPs to verify proper calculation and printout. Apply correction to the registration errors and verify calculated values are the same as the applied values.

(g) Collimation. Include capability to verify that this portion of the RTQC program will correctly calculate collimation errors and provide an accurate indication of the magnitude of the error in the printout to the NAS operations manager. Using PLANE and CSITE CARDS, introduce a range error of 3/8 nautical mile and 11 ACPs to verify proper calculation and printout. Apply correction to the collimation errors and verify calculated values are the same as the applied values.

(3) RDP and Tracking. Include the capability to check the radar data processing and tracking capabilities. This data includes search only targets, beacon only targets, beacon reinforced targets, lim-

ited data blocks, full data blocks, flight plan aided tracks, free tracks, weather data, automatic handoff, manual handoff and accept. The simulated requirements are illustrated, by display area designation, in figures 5−1 through 5−5 and as described in the following subparagraphs.

(a) Display Area 1. Display area 1, shown in figure 5−1, will make use of search (uncorrelated (.), uncorrelated (+), and correlated (X)), and beacon (uncorrelated (/), correlated (\), and identification beacon code (≡)) targets to test the system's ability to process and display different types of radar data. A series of 90-degree turns are included to follow the outside edge of a weather area.

(b) Display Area 2. Display area 2, shown in figure 5−2, will be used to depict, flight plan aided, crossing track conflict situation. This test consists of three tracked aircraft. Flight one is on heading 090, flight level 210 climbing to 220, 300 nautical miles per hour, with a nondiscrete beacon code. Flight two is on heading 225, flight level 220, 300 nautical miles per hour, with a discrete beacon code. Flight three is on heading 315, flight level 225, 300 nautical miles per hour, with discrete beacon code. The tracks are converging and cross a point at the same time.

(c) Display Areas 3. Display area 3, shown in figure 5−3 will be used to depict search (correlated (X)) tracking, using a free track full data block, through clutter (uncorrelated short (.) runlength, search). This test will also include a flight plan aided track, through clutter, with a minimum safe altitude warning.

(d) Display Area 4. Display area 4, shown in figure 5−4 will be used to depict overtaking and head-on conflict situations on tracked aircraft using emergency beacon codes. Flight one is on a heading of 000, flight level 300, 300 nautical miler per hour, with a beacon code of 7600 (COM FAILURE). Flight two is on a heading of 000, flight level 290, 600 nautical miles per hour, with a beacon code of 7500 (HIJACK). Flight three is on a heading of 180, flight level 310, 300 nautical miles per hour, with a beacon code of 7700 (EMERG). Flight two is overtaking flight one, and both are meeting flight three. The three tracks are converging and pass at one point.

(e) Composite Display Area. The composite display, shown in figure 5−5 depicts the composite of display areas 1 through 4. It also includes tests to verify registration and collimation features of the operational program. These tracks must be located in the geographical areas making them eligible for registration calculations. Other emergency conditions should be tested and may be displayed as shown in the sample composition ARTCC display.

(f) Weather Display. Include capability to verify the proper display of weather information. The outer contour lines portion of the weather display should be run during the first minutes of the test. The simulation program WTHER and CSITE cards can be used to define the characteristics of the display to be generated. An example of a WTHER card that will generate the desired weather pattern over a hypothetical ARTCC is completed as shown in table 5−2 (see paragraph 525 for table 5−2). The use of weather pattern displays can be enhanced by utilizing special geographical maps included in the adaptation for use at the SMMC situation display during certification and for other performance analysis purposes. Some useful special geographical map capabilities include the following: azimuth division area outlines, range markers, sector boundaries, radar site, permanent echo and RTQC test target locations and deviation limits, as well as outlines of preferred radar sort box assignments in the ARTCC radar coverage area.

(g) Radar Strobe. Include the capability to verify the proper display of the strobe function. This simulation feature is entered using the PLANE cards. Table 5−3 gives samples of PLANE cards used to enter beacon (B) and primary (P) type strobe displays (see paragraph 525 for table 5−3).

(4) End Notification. Input a GI message to all devices, stating that CRAD certification has been completed.

e. ATCC System. The data file requirements for the ATCC system certification consist of the input messages required for CFAD and CRAD certification plus the messages necessary to cause all reconfigurable CCCH, NRKM, and FDIO elements (including DPCU's) to be reconfigured.

f. RDED System. The data file requirements for the RDED system certification consist of the input messages required for CRAD certification plus the messages necessary to cause all reconfigurable units of the display system to be reconfigured.

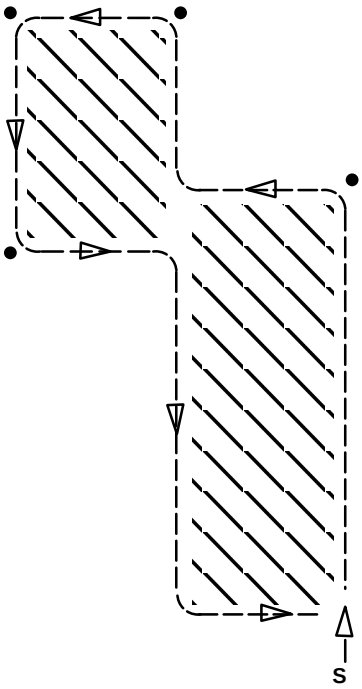

FIGURE 5–1. DISPLAY AREA 1

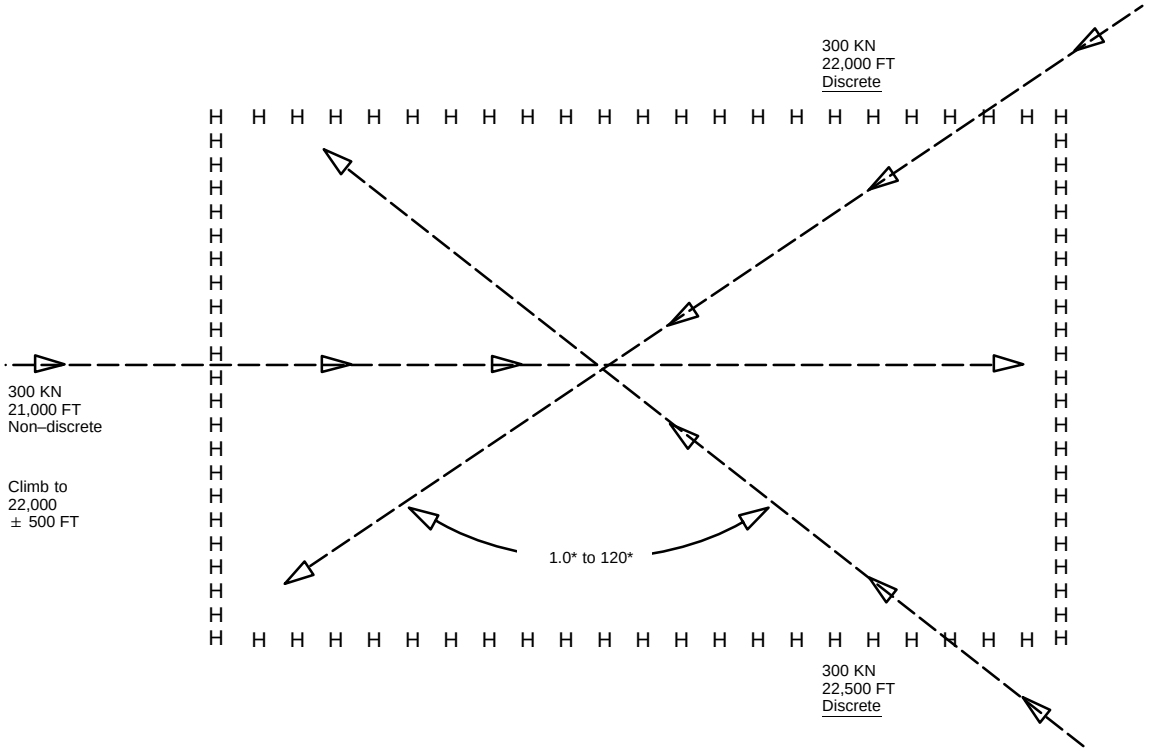

FIGURE 5–2. DISPLAY AREA 2

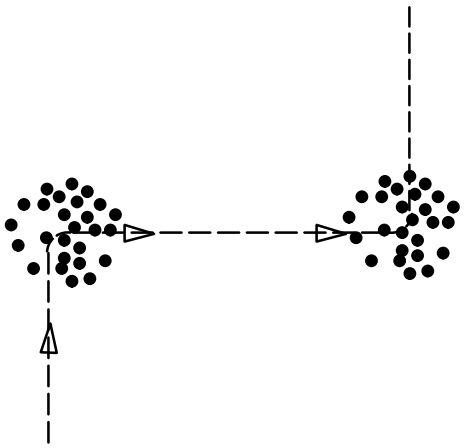

FIGURE 5–3. DISPLAY AREA 3

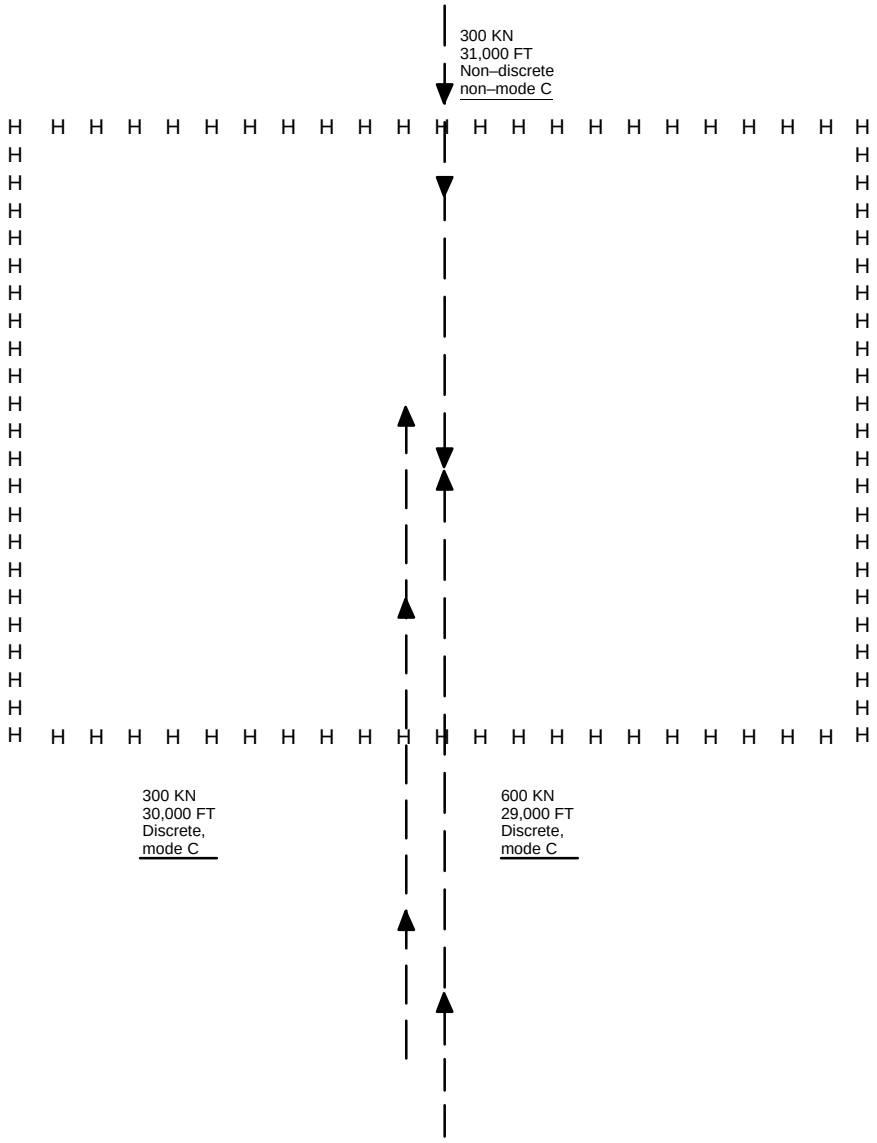

FIGURE 5–4. DISPLAY AREA 4

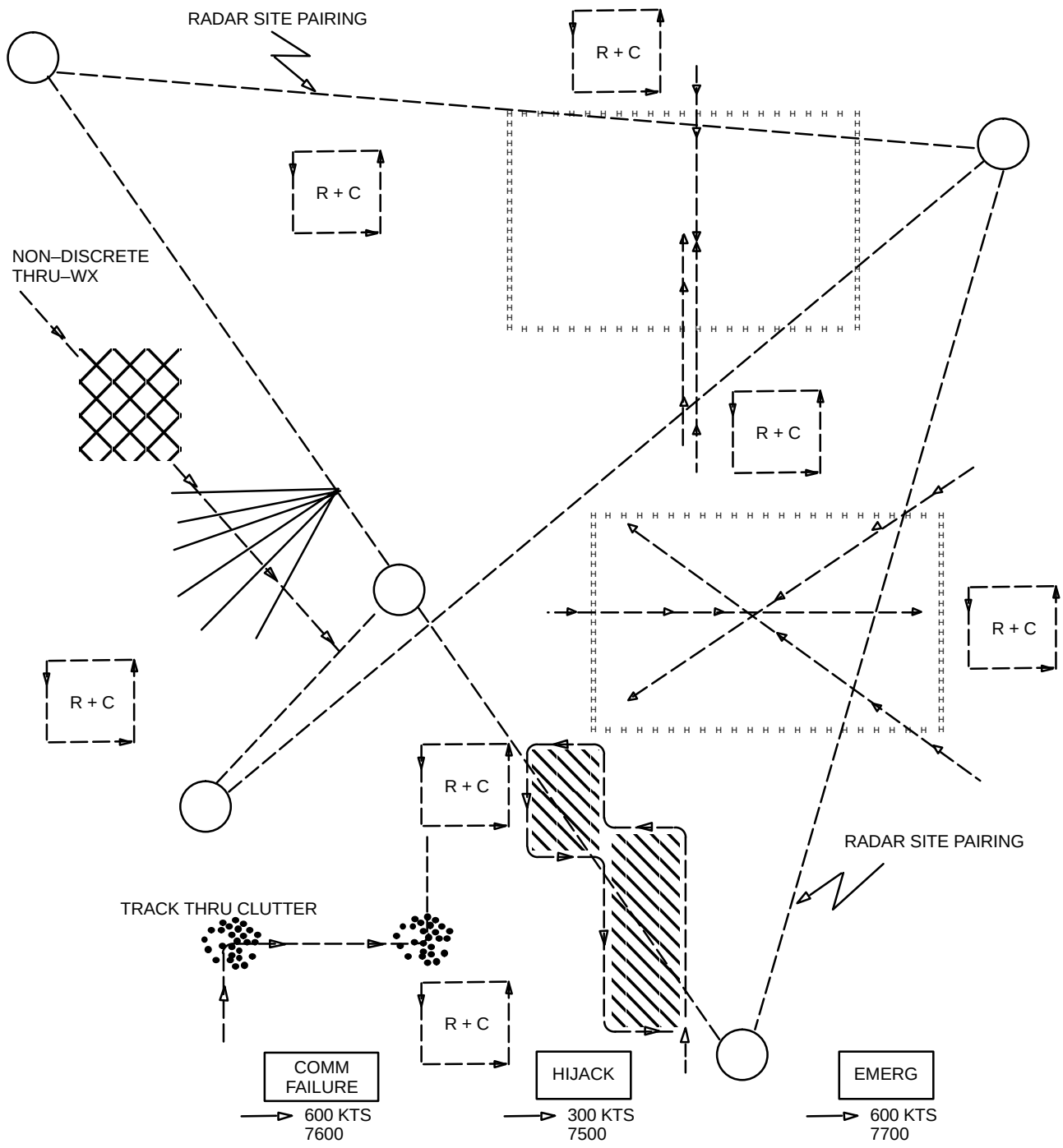

FIGURE 5–5. COMPOSITE ARTCC DISPLAY

507. CFAD/CRAD SERVICE LEVEL CERTIFICATION PROCEDURES.

a. Objective. To verify the ability of the system to perform flight data processing and radar data processing in support of the air traffic control mission of the FAA.

b. Discussion.

(1) General. This procedural guideline may be used following system startup or during continuous operation. The CFAD service should be verified first, in order to allow the earliest possible use of this service. The CRAD service verification should then be started.

(2) Certification Techniques Available. The online certification program shall be the primary means of certification and structured for a minimum run time. Typical minimum run times for CFAD will be 5 minutes, and 20 minutes for the CRAD. Alternate techniques available include offline certification programs as well as the following.

(a) The applicable subsets of subsystem maintenance diagnostic programs.

(b) The testing capability of the NAS operational program.

(c) The special manual procedures designed to verify the certification parameters defined in appendix 1.

The parameters are limited to a critical subset of functional capabilities of the NAS operational system and its error checking capabilities.

(3) Certification Requirements. The certification requirements are listed in appendix 1, section 1 for the CFAD and section 2 for the CRAD.

(4) Guidance on the use of the online certification (OLC) program is contained in the OLC Users Manual and in the NAS Monitor Manual. The contents of the OLC and OLCT simulation data files are described in paragraph 506.

c. Detailed Procedures.

(1) Load (if necessary), the current version of the NAS operational program.

(2) Cycle the CFAD module of the online certification program.

(3) Reconfigure at least one major CCCH element or cycle the reconfiguration module of online certification.

NOTE: If all elements are used in the operational system at least once a week, as part of a scheduled system configuration plan, a single reconfiguration is sufficient.

(4) Evaluate results, enter the certification status in the facility log, and advise air traffic personnel.

(5) Cycle the CRAD module of the online certification program.

(6) Verify satisfactory radar coverage and accuracy as determined at the radar sites, by current radar certification.

(7) Verify satisfactory narrowband radar site coverage. This can be accomplished by monitoring the RTQC printouts or the use of offline programs such as RSCANS, RARRE, or QARS.

(8) Verify radar range and azimuth accuracy for each site by monitoring the PE verification, registration and collimation function of RTQC. Otherwise use the RAPPI printouts, the search and beacon PEs, and the Digitizer displayed coordinates to verify the radar accuracy.

(9) Verify the display channel accuracy by monitoring a PE or digitizer test target on the situation display.

(10) Reconfigure at least one major unit of the display system and all dedicated spares, such as the spare DGs and RKMs or cycle the display channel reconfiguration module of the online certification program.

NOTE: If all elements and units are used in the operational system at least once a week, as part of a scheduled system configuration plan, a single reconfiguration in each system is sufficient.

(11) Evaluate the results, enter the certification status in the facility log, and advise air traffic personnel.

(12) Purge simulation data from the system as necessary.

508. DRAD SERVICE LEVEL CERTIFICATION PROCEDURES.

a. Objective. To verify the ability of the system to perform radar data processing service required of this backup system.

b. Discussion.

(1) Certification Techniques Available. There are no automated certification programs available for the DRAD service. The techniques are limited to manual procedures designed to verify the certification parameters.

(2) Certification Requirements. The DRAD certification requirements are listed in appendix 1, section 11 of this order.

c. Detailed Procedures.

(1) Verify satisfactory radar coverage as determined by current, valid certification of the radar systems.

(2) Verify satisfactory narrowband radar coverage as determined by the lack of RTQC error messages from the operational program and the display presentation, or by use of offline CCCH programs such as QARS, RARRE and RSCANS. Also refer to paragraph 516.

(3) Verify that the radar (range and azimuth) accuracy meets requirements by checking one or more of the following for each radar:

(a) The beacon and search PEs are within ± 1/8 nmi and 2 ACPs of their mean average value as reported by the Permanent Echo Verification Printout (PEVP) or as observed on the display.

(b) Registration and collimation are within ± 1/8 nmi and 2 ACPs of their mean average value as reported on the Beacon Registration Printout (BRPO) and Radar/Beacon Collimation Printout (RCPO) reports.

NOTE: Collimation is only available if the beacon offset (1/2 mile delay) is active, or the digitizer type is a CD−1.

(4) Verify that the display accuracy meets requirements by checking that the search or beacon PE targets are within the adapted geographical map box (± 1/8 nmi and ± 2 ACPs of their mean average value).

(5) Verify the operational acceptability of radar data processing and tracking by monitoring a minimum of three, correlated, discrete beacon code, tracked aircraft. If necessary, start tracks in order to verify this function. If the CRAD service is certified, this function may be checked by comparison to the prime system, otherwise the simulation method is required.

(a) Comparison to the CRAD Service. Comparison to the CRAD service shall be accomplished using targets of opportunity, presently tracked by the prime and DARC systems, with the DARC system in the DARC/HOST mode of operation. Comparison shall be accomplished for a minimum of 3 minutes for each selected target. Compare the track, velocity vector, and all data block fields between the two systems. Verify the following:

1 There is no significant loss of system updating of targets or full data blocks.

2 The full data blocks track the correct radar target, i.e., no track swaps.

3 Aircraft identification and altitude fields of the full data blocks are the same in both systems.

4 The ground speed and velocity vector fields of the full data blocks are constant and the same value in both systems.

(b) The following are guidelines for targets of opportunity selection and comparison setups.

1 At least two of the three targets with a ground speed exceeding 300 nmi.

2 One of the three targets with mode C reported altitude below 18,000 feet.

3 Each target selected should be in an area covered by different types of radars (i.e., ARSR−3, FPS−67, 10-second scan, 12-second scan).

4 Targets selected should not be traveling on the same relative heading to insure a variety of tracking conditions.

5 Select an area of display in which a map fix (i.e., very-high frequency omnidirectional range (VOR)) may be easily centered in both systems for ease of comparison.

(c) Simulator Method. This method may be used regardless of the certification status of the CRAD service. It uses simulated radar targets of

known speed, altitude, and beacon code. The targets are input to RMUX B from the simulator cabinet. The following procedure is provided.

1 Configure RMUX B to the DP and sector to be tested.

2 Load the current simulation disk on the simulator and start the test. Switch RMUX B to the simulator position at the SSC cabinet.

3 Start certification tracks on all simulation targets.

4 Verify no significant loss of system updating of full data blocks (FDB), that FDBs do not swap, and that the altitude and ground speed fields are consistent with the known simulation values.

5 Restore the RMUX B switch on the SSC cabinet to its original position and reconfigure the appropriate DPs to the appropriate RMUX. Change modes to DARC/HOST or cancel the certification tracks.

(6) Verify data display capability and video presentation by checking that the following types of displayable data are present and of operationally acceptable quality.

(a) Primary symbols short (.) or long (+) runlength.

(b) Beacon symbols (/).

(c) Geographic maps (airways, sector boundaries, and special areas).

(d) Data blocks.

(e) Weather data (high and/or low) if known to exist.

(7) Verify data entry capability by entering a few messages and checking for satisfactory system operation.

509. SYSTEM/SUBSYSTEM LEVEL CERTIFICATION PROCEDURES.

a. Objective. To provide the procedures necessary to verify that the ATCC, RDED, and RDED backup systems are capable of performing their intended function.

b. Discussion.

(1) Certification Techniques Available. Online certification actions can be performed with minimal interference to the on-going air traffic control operations in progress. Certification of the RDED backup system, however, requires the use of manual procedures. During periods of continuous operation, system level certification can be scattered throughout the operational day. This system level certification should be performed during periods of low traffic activity, and with the approval of the air traffic control staff on duty. This procedural guidance is general in nature yet specific enough to support certification of the systems.

(2) Certification Requirements. The system certification requirements are listed in appendix 1 of this order as follows:

(a) Reserved.

(b) ATCC in section 4.

(c) RDED (for CDC) in section 6.

(d) RDED (for DCC) in section 8.

(e) RDED (backup) in section 12.

(f) RDED (for DCCR) in section 14.

(g) RDED (for DSR) in section 16.

c. ATCC System Level Certification Procedures.

(1) Ascertain that the most current online certification program is loaded and available for call-up.

(2) Coordinate proposed certification actions with ATC.

(3) Run the ATCC online certification module, maintenance programs, or the manual procedures necessary to verify the certification parameters listed in appendix 1, section 4 of this order.

(4) Evaluate results and enter the certification status in the facility maintenance log.

(5) Restore system to normal, purging the simulation data as necessary.

d. Reserved.

e. RDED Subsystem Level Certification Procedures.

(1) Ascertain that the most current online certification program is loaded and available for call-up.

(2) Coordinate proposed certification actions with ATC.

(3) Run the RDED online certification module, maintenance programs, or the manual procedures (for DSR see paragraph 509g.) necessary to verify the certification parameters listed in appendix 1, section 6, section 8, section 14, or section 16 (site dependent) of this order.

(4) Evaluate results and enter the certification status in the facility maintenance log.

(5) Restore system to normal, purging the simulation data as necessary.

f. RDED Backup Subsystem Level Certification Procedures.

(1) Data Entry Keyboard (DEK) and Input/Output Typewriter (IOT).

(a) Configure the DEK unavailable. Verify that the local and remote status panels and the unit status summary report at the line printer indicate that the DEK is unavailable.

(b) Place the online select switch to the offline CP position. Verify that the local and remote status panels and the unit status summary report at the line printer indicate that the CPs reconfigured.

(c) Configure the DEK online. Verify that the local and remote status panels and the unit status summary report at the CP indicate that the DEK is available.

(d) Place the CP select switch to the automatic mode.

(2) General Purpose Output (GPO). The general purpose output interface with the CCCH is verified by determining there are no CCCH to DARC interface errors; that flight identifications have been transferred from CCCH to DARC, in the DARC/HOST mode, as evidenced by observing tracked aircraft on the DARC PVD presentation.

(3) Radar Console Interface.

(a) Set DARC to the DARC/HOST mode.

(b) Enter a flight identification/beacon code message for a nonexistent flight. Verify that the message is rejected.

(c) Change the R−Console range. Verify that the correct display appears on the R−Console. Restore the R−Console range to the initial value.

(d) Offset the PVD center. Verify that the correct display appears on the PVD. Restore the PVD center to the initial value.

*DSR R−Console: Offset R−Console center by position trackball cursor to new center and depress multi/function and map manual keys. Verify the current display appears on the R−Console. Restore the R−Console center to the initial value by depressing the multi/function and map preset keys.

(e) Coordinate with NAS operations manager before changing mode. Set DARC to the DARC mode.

(f) Depress QAK #1 T/B (trackball) over Limited data block and depress T/B enter. Type in beacon code of limited data block and ACID and keyboard enter. Verify that the preview area is cleared and that an FDB is displayed.

*DSR R−Console: Depress Function Key <Code> Type in beacon code of limited data block and ACID and keyboard enter. Verify that the preview area is cleared and that an FDB is displayed.

(g) Deselect switch #4 (mode 3/A beacon code) on the field select panel. Verify that the 3/A code in all FDBs is not displayed.

*DSR R−Console: <Pick> Establish Beacon (mode 3/A beacon code) on the field select panel. Verify that the 3/A code in all FDBs is not displayed.

(h) Depress switch #4 on the field select panel again. Verify that all beacon codes on the PVD have their beacon code displayed in the FDB.

*DSR R−Console: <Pick> Establish Beacon on the field select panel again. Verify that all beacon codes on the R−Console have their beacon code displayed in the FDB.

(i) Depress Quick-Action Key 1 to initiate a flight identification to discrete beacon code association.

*DSR R−Console: Depress Function Key <Track> to initiate a flight identification to discrete beacon code association.

(j) Depress the letter A on the alphanumeric keyboard. Verify that the letter A appears in the preview area of the R−Console.

(k) Depress the Clear key to cancel the above message. Verify that the preview area is cleared.

(4) R−Console Video Presentation. Verify that the following types of displayable data are present on each R−Console.

(a) Primary symbols short (.) and long (+) runlength.

(b) Beacon symbols(/).

(c) Geographical maps (airways, sector boundaries, and special areas).

(d) Data blocks.

(e) Weather data (high and/or low) if known to exit.

(5) System Control.

(a) In DARC mode, set CP select switch to AUTO.

(b) At the online CP control panel, depress the Halt switch. Verify that offline CP becomes the online CP, that new offline CP is unavailable, and that error messages and the unit status summary report output at the line printer and DEK indicate that fact. Also, verify that the local and remote status panel indicate the change. If in DARC/HOST mode, verify the HOST interface is disabled.

(c) Press the automatic load switch for the offline CP. Verify that the unavailable offline CP status becomes standby, as indicated by line printer and DEK, and status panel indicators.

(d) Reconfigure DPs to cause both spare DPs (one at a time) to be configured into the operational system. It is suggested that each time this procedure is performed the next sequential DP be used so that over a period of time all DPs will be exercised. It is not necessary that any displays be in DARC mode for this test.

1 Verify that the spare DPs are online and that the unit status summary report and the local and remote status panels reflect the new configuration.

2 Return the DPs to their normal configuration and verify that the active DPs are online and that the spare DPs are standby. Verify that the printouts at the line printer and DEK plus the indicators on the status panels reflect this change.

(e) Switch each RDDU into the system to verify that both are capable of correctly processing and transferring all types of radar data to the display processors.

(6) Evaluate the results and enter the certification status in the facility maintenance log.

g. RDED DSR Subsystem Level Certification Procedures. This procedure may be performed using live data with targets of opportunity at sectors assigned airspace and/or by using a SIM file. A specific SIM built for support of RDED may be desirable to aid in identification of SIM data.

(1) To perform RDED using the SIM perform the following steps:

(a) Initiate the SIM from the Host.

(b) At the DSR R−Console to be certified, increase the range to 400nmi to display the SIM data which will be outside of the normal sector airspace.

(c) Once the SIM data is located, place the trackball cursor over the SIM data area and press "MULTI−FUNC" and "MAPMAN" keys simultaneously. This will center the area of SIM data on the R−Console display.

(d) With the SIM data centered on the display, decrease the range to clearly display the SIM data.

(e) Using the SIM data, perform the RDED checks as specified in 6100.1E.

(f) A typical online certification SIM will run approximately 30 minutes and will have to be restarted as necessary to support RDED for each console.

(2) The following steps can be performed using live or SIM data:

(a) At the R−Console keyboard depress the "CRD" function key, type 000B001 <KYBD ENTER> and verify change displayed in CRD View.

(b) Deselect the following functions in the DC View:

1 All LDBs, select LDBs, all Primary, Non−Mode C, select Beacon and all Altitude Filter Keys 000 through 999.

2 Verify that none of the above are displayed on the R−Console.

(c) Repeat step (a) using 030B100.

Verify that all LDBs displayed have altitudes between 3,000 and 10,000 feet.

(d) Reselect all functions deselected in step (b).

Verify that all data is being displayed on the R–Console.

(e) Position trackball over an FDB ACID and press trackball <ENTER>.

Verify that selected FDB flight plan is displayed in "CRD" view.

(f) Select/deselect the following in the R–Console DC View:

1 All primary, WX1, WX2, WX3, MAP1, MAP2, and MAP3.

2 Verify all data can be displayed and cleared from the R–Console, note weather if available.

(g) The "D" side access keypad functionality can be validated by depressing the 13 keys and watching the action of the soft keys on the DSR display in the DC view.

(h) The trackball home, pick and enter keys can be validated by selecting and deselecting options on the DC View and validating that the proper actions occurred (range increased, decreased, cursor went to home position, etc.)

(i) The display can be validated by using the MULTI-FUNC "T" option and viewing the five display test patterns to validate focus, linearity, display size, etc.

(j) The entire alpha/numeric functionality can be validated by pressing the keys individually and observing the CRD view to insure the proper character was typed.

510. ELEMENT LEVEL CERTIFICATION PROCEDURES.

a. Objective. To provide the procedures necessary to verify that the elements and equipment that make up the systems are capable of performing their intended function.

b. Discussion.

(1) Certification Techniques Available. The techniques include evaluation using operational, support, diagnostic, and maintenance programs. The use of general and special purpose test equipment and normal maintenance techniques is necessary to verify the certification and key performance parameters specified in this order and the equipment instruction books.

(2) Certification Requirements. Certification is required for the elements of the CCCH, CDC, DCC, DCCR, DARC, and DSR systems as defined in appendix 1 of this order: section 5 for CCCH; section 7 for CDC; section 9 for DCC; section 13 for DARC; section 15 for DCCR; and section 17 for DSR.

c. Detailed Element Certification Procedures.

(1) Set the affected element or equipment to the configuration status required to run the tests.

(2) Load and run the test programs specified in appendix 1, observing for error free operation.

(3) Analyze results of program run. Take corrective action as appropriate.

(4) Restore the element or equipment to normal configuration status.

(5) Repeat the above procedure for each element or equipment of the system.

(6) Verify normal operation of the element in the offline/support system as required by appendix 1.

(7) Evaluate the results, and if total or partial certification criteria can be met, enter the certification status in the facility maintenance log.

511. RDP DISPLAY CHANNEL ONLINE MANUAL PERFORMANCE CHECKS.

a. General.

(1) The RDP display channel systems (CDC, DCC, or DCCR) performance may require rechecking prior to the next periodic checkout. If OLC, OLCT or NSCT capability is not available, display channel performance checks can be accomplished online using these manual procedures as a guide.

(2) These manual procedures include the checkout of data display quality and data accuracy.

(3) Provisions have not been made for guidance in all possible restoration situations or the required procedures involved; therefore, the cognizant technician must determine the extent of the actions to be

taken since they will relate directly to the effect of the malfunction involved. For example, if the malfunction had no impact on the total displayable repertory of symbology, there is obviously no need to verify the quality of all the displayable symbology.

(4) New radar systems continue to be deployed in the field; these systems all have processors which generate digitized target messages, i.e., they have digitizers. References to single test target generation will be made using the term, Digitizer.

(5) The DSR performance may require rechecking prior to the next periodic checkout. One method of rechecking would be to use the "Certify Hardware (CERT)" command. The Certify Hardware command is used to immediately run hardware certification and software release level tests on one or more processors and obtain the results. This command will run all Operational Exerciser (OPEX) tests on the processors being tested.

b. Detailed Procedures.

(1) At the affected sectors, verify that the following types of displayable data are present to the extent required by the restoration action:

(a) Primary symbols (correlated, uncorrelated, short (.) or long (+) runlength).

(b) Beacon symbols (correlated and uncorrelated).

(c) Geographical maps (GEOMAP) (airways, sector boundaries and special areas).

(d) Limited data blocks.

(e) Full data blocks.

(f) Low- and high-intensity weather symbols.

(g) Strobes.

(h) Inbound, departure, and hold lists.

(2) At the affected sectors, verify that the digitizer RTQC test target or permanent echo (PE) symbols for all radar that are adapted are within the tolerance limits defined by their associated geographical map symbol.

(3) The following several steps are an alternate procedure that may be used to verify display channel accuracy only. It is based upon the use of the VOR geographical map symbol as a reference in conjunction with a single digitizer test target initially centered over the symbol and thereafter used as a known target over that reference location, available on demand.

(4) At the ARTCC:

(a) Determine the system, X, Y coordinates of all the radar sites and record these values.

(b) Using navigational charts, adaptation data base information and/or radar sort box (RSB) calculations (appendix E, paragraph 3, NAS–MD–320), select the VOR(s) such that their location(s) will fall within the RSB assigned to the particular radar(s) as a preferred site coverage for that RSB.

(c) Ascertain the system X, Y coordinates of each VOR location and pair these coordinates with the coordinates of the radar sites.

(d) Determine the differences, ΔX, ΔY, between radar sites, X, Y and associated VOR site X, Y system coordinates.

(e) Calculate the approximate range values in nautical miles from each radar site to associated VOR site using the following relationship:

$$\text{Range} = [\Delta X^2 + \Delta Y^2]^{1/2}$$

Retain these values for use later at the radar site.

(f) Using a protractor and a navigational chart, determine as closely as possible, the approximate azimuth angle from the radar site to the associated VOR. Retain these values for use at the radar site.

(g) Provide each of the radar sites with the calculated or measured range and azimuth values as a starting value to be used in centering the single digitizer test target over the associated VOR symbol.

(5) At the radar sites:

(a) Set up the digitizer test target generator to generate a single test target at the VOR range and azimuth values determined. Determine that test bit is not set or the test target will not be displayed at the ARTCC.

(b) Advise the center that the test target is being generated and should be displayed on the selected PVD as a + symbol.

(6) At the ARTCC:

(a) Set the PVD controls so that the selected VOR geographical map symbol and the digitizer test target are being viewed on the 6-mile range scale.

(b) Note the position of the digitizer test target, and advise the radar site technician of the appropriate changes in the test target azimuth and range required to make the + symbol center coincident with the VOR geographical map symbol center.

(c) When coincidence occurs, advise the remote site technician to record the test target generator settings for future use. The CENTERED range and azimuth settings must be determined and recorded at each radar site.

(d) A list of radar site/VOR pairs, digitizer test target generator settings, and test target RAPPI printouts shall be made available at both the radar site and at the NAS operations manager's position for ease of reference.

(7) At the radar site, turn off the digitizer test target after the reference settings have been determined and verification actions have been completed. This reference setting may also be used for periodic maintenance when producing the 32 target ring.

(8) If a subsequent test indicates that the test target is offset from the VOR symbol, the ARTCC observer should ask the radar site technician to change the setting until the + symbol is again centered. The radar site technician should then advise the center observer of the amount of deviation from the original centered values that were required to recenter the symbol over the VOR symbol. If this deviation exceeds ± 1/8 nmi or ± 2 azimuth change pulses (ACPs), the display accuracy service shall be decertified and the necessary corrective action initiated.

(9) Make the specified certification entry in the maintenance log if all other requirements have been met.

512. RESERVED.

513. RESERVED.

514. RDAT SYSTEM PERFORMANCE CHECK.

a. General. Performance check procedures are available for the major components of the radar data acquisition portion of the RDAT system. They may be found in the applicable technical handbooks for the radar, beacon and digitizer equipment.

b. Performance Verification. Assure that the digitizing system is performing properly and is providing accurate target position data into the CCCH. This may be accomplished by using referenced handbooks, and by using both the quick analysis of radar sites (QARS), and radar statistical coverage analysis system (RSCANS) programs. The accuracy and coverage verification procedures in this section may also be used as alternate methods if needed. Log the results of the verification actions in the radar site and ARTCC maintenance logs, as appropriate.

515. RESERVED.

516. RADAR SYSTEMS COVERAGE SERVICE VERIFICATION.

a. General. Verification that the coverage being provided by the digitized radar system is adequate involves radar site and ARTCC actions.

b. Detailed Procedures.

(1) At the radar site:

(a) Complete the daily performance check tasks for the radar, beacon, and CD equipment/systems.

(b) Verify that coverage related parameters are within their operating tolerances as specified in the applicable radar, beacon, and CD technical handbooks.

(2) At the ARTCC:

(a) Monitor the data quality for the following:

1 Presence of different beacon code.

2 Search data and reinforcement rate,

3 RDAT hardware status.

(b) After the operational program has cycled for a sufficient period of time, verify the following:

1 That no excessive or missing data condition exists for any site. Checks performed at the radar site, maintenance software checks, and/or visual observations of displayed data on each channel may be utilized as alternate means for verification of these subparameters of coverage service.

2 That no beacon or search test message error conditions exist for any site.

3 The operational coverage acceptability of the radar sites by the radar site status summary printout and the radar coverage control site status printout. These printouts are solicited by entering a ZS and YR message respectively.

(c) If actual missing or excessive data conditions exists for any site, or if actual coverage is not acceptable for any site, certification for that site will be withheld until the condition is cleared.

(3) Upon successful completion of procedures at the radar site and at the ARTCC, the NAS operations manager will enter any noted exceptions into the facility maintenance log.

517. RADAR DATA PROCESSING SYSTEM RANGE AND AZIMUTH ACCURACY CHECKING PROCEDURES.

a. General.

(1) Range and azimuth accuracy checking by daily visual verification of search radar permanent echoes on the PPI display is not a satisfactory technique when it is necessary to visually discriminate incremental changes of the order of 2 ACPs (0.176 degrees) in azimuth data and 1/8 nautical mile (nmi) in range data. NAS system designers have included an online, statistical technique (the registration analysis (RA) task of the RTQC portion of the NAS and DARC operational program) for site registration verification and dynamic data correction. This program compares the reported position of several beacon-equipped aircraft as viewed by two adjacent radar sites in an overlapped coverage area. Because of eligibility criteria and sample size required, the calculation may take considerable time to complete for the several pairs of sites serving a given center. While the RA function is preferred, it is not the most timely method to use for performance verification at any given center. Accordingly, alternate techniques are included in this paragraph, and the NAS operations manager on watch, with appropriate advice from the radar sites involved, shall select the technique that will permit the most timely verification of the accuracy service items.

(2) Three basic techniques are included that:

(a) Utilize the daily performance checks conducted by the CD technician delineated in Order 6350.8A, Maintenance of Common Digitizer Equipment, which includes the collimation analysis task of RTQC to assure that radar and beacon data are properly collimated.

(b) Utilize adapted GMLSDA map symbology that will indicate the location of the selected PEs for each of the sites servicing the ARTCC.

(c) Rely entirely upon completion of the registration and collimation analyses with appropriate dynamic correction actions.

b. Detailed Procedures. The following subparagraphs include specific guidelines and procedures for all techniques included:

(1) Radar Site PE Accuracy Checks/Collimation Analysis Procedure — METHOD 1.

(a) Radar site PE location accuracy verification procedure:

NOTE: These guidelines are generalized in form; local variations that achieve the same basic goals may be used if desired.

1 At the radar site (site technician) will:

a Complete the daily performance checks for radar beacon and digitizer equipment.

b Verify that at least one PE is visible on both search or beacon systems. Verify that coordinates are within ± 1/8 nmi and ± 2 ACPs of the normal, mean (average) value for that PE. Refer to paragraph 517(1)(b) of this chapter, for the method of developing a standard list of PE coordinates for each radar site.

c If the PE coordinates are out-of-tolerance, the radar site technician shall advise the NAS operations manager that corrective action is required, and radar site personnel shall take appropriate action to assure accuracy verification, in consonance with ARTCC/Air Defense Tactical Air Command as determined through the NAS Operations Manager/Air Traffic Assistant Chief (ATAC) interface or the NAS Operations Manager/Air Defense Tactical Air Command interface.

2 At the ARTCC (NAS operations manager) will:

a Verify that presence and alignment of the beacon and search test targets from all radar.

b Ascertain that the NAS operational program is cycling. Collimation calculations may be expedited if the site is advised to set the beacon offset switch to ON during this procedure. Coordinate with air traffic as required.

NOTE: Collimation is only available if the beacon offset (1/2 mile delay) is active or the digitizer type is a CD−1.

c Initiate collimation analyses for each of the radar sites serving the ARTCC.

d Verify that collimation between search and beacon reports (less offset) is within ± 1/8 nmi and ± 2 ACPs, using the printouts from the collimation analysis. If the collimation errors exceed the tolerances, initiate corrective action and recheck collimation as appropriate.

e If the PE coordinates and collimation errors are within tolerance for all sites involved, RDP accuracy service verification is completed. Restore beacon offset to normal (if used in step b above.)

f Enter into the facility maintenance log any noted exceptions.

(b) Development of the standard permanent echo (PE) list for each radar, beacon site:

1 The RDAS specialist staff should work with each of the radar sites and develop a list of permanent echoes for each site. It is essential to have a sufficient number to assure that at least one PE will be available for daily accuracy verification. Candidates for this list of "standard" permanent echoes should be developed using the PE locator program and charts of the surrounding radar environment.

2 The standard PE list should include the arithmetic mean (or average) value of coordinate data related to each of the PEs listed. After a period of usage, the standard deviation should be prepared for each of the available PEs. This may be readily accomplished with a desk or hand calculator. Initially, the PE location coordinate statistics (mean and standard deviation) should be recalculated on a monthly basis. If they prove to be very stable, recalculation frequency should be reduced to quarterly.

3 Use of the standard deviation (a widely used measure of variance) of the PE coordinates, will greatly assist the NAS operations manager in selection of the most stable PE for accuracy verification. Accordingly, a sample calculation is included for convenience. Ten azimuth data samples are given for a hypothetical PE. Two methods are shown for calculating the sum of the squares of the deviations, which can be the most tedious portion of the calculation for standard deviation. The "short" method is included and recommended for use with a calculator, since it is less subject to round-off errors than the more direct approach.

4 Several simple statistical terms and concepts should be considered in order to assure more than a "mechanical" grasp of the calculation involved. Among these terms are important and useful measures that can be associated with a set of measurements. It is the measure of "central tendency," i.e., the arithmetic mean, or simply the mean (or average). It is defined as the sum of the measurements, divided by the number of measurements. Another important measure deals with the "dispersion" or "variability" of the measurements. This "variance" measure is used in developing the standard deviation. Variance is defined as the average of the squares of the deviations of the measurements about their means. Standard deviation is also defined as the positive square root of the variance. The standard deviation restores the original units to the measure of dispersion (variance) which are, by definition, squared units of dispersion.

5 The following example illustrates the method of calculating standard deviation, based upon its definition:

Reading #	ACPs	Deviations from Mean	Deviations Squared
1	01	−1	1
2	02	0	0
3	03	+1	1
4	01	−1	1
5	02	0	0
6	02	0	0
7	03	+1	1
8	02	0	0
9	02	0	0
10	02	0	0
Totals	20	0	4

$$\text{Arithmetic Mean} = \frac{20}{10} = 2$$

$$\text{Standard Deviation} = \frac{(\text{Sum of Deviations Squared})^{1/2}}{\text{Number of Readings}}$$

$$\text{Standard Deviation} = \frac{(4)^{1/2}}{10} = .63 \text{ ACPs}$$

6 Another method more suited to calculator techniques is illustrated below. It is based on a different though equivalent computation of the sum of the deviations squared, which is less subject to round-off error.

Reading #	ACPs	$ACPs^2$
1	01	1
2	02	4
3	03	9
4	01	1
5	02	4
6	02	4
7	03	9
8	02	4
9	02	4
10	02	4
Totals	20	44

$$\text{Standard Deviation} = (\text{Total of ACPs}^2) - \left[\frac{(\text{Total of ACPs})^2}{\text{Number of Readings}}\right]$$

(alternate method)

$$= 44 - \frac{(20)^2}{10} = 44 - \frac{400}{10}$$

$$= 44 - 40 = 4$$

Again, standard deviation is the square root of the variance.

$$\text{Standard Deviation} = \frac{(4)^{1/2}}{10} = .63 \text{ ACPs}$$

7 Empirical rules have evolved, which provide the following useful information concerning distributions, approximating the normal (bellshaped) distributions:

a The interval of the distribution between +1 standard deviation and −1 standard deviation around the mean will contain approximately 68% of the measurements.

b The interval of the distribution between +2 standard deviations and −2 standard deviations around the mean will contain approximately 95% of the measurements.

c The interval of the distribution between +3 standard deviations and −3 standard deviations around the mean will contain approximately 99.7% of the measurements.

Properly applied, these rules permit important inferences to be drawn from the measurements at the 68%, 95%, and 99% "confidence levels."

8 The standard PE lists shall be made available for use by cognizant radar site and ARTCC personnel during verification.

9 The standard list shall be kept current by the NAS operations manager and radar site action, so that cognizant users will have the most current list available for verification purposes.

10 The PEs selected for use may be verified using the PE verifier or D7454 subsystem maintenance diagnostic program. The PE locator program assists in initially defining the candidate PEs and is generally used at Surveillance System Testing (SST).

11 During PE verification using the PE verifier, it is important that the operating digitizer equipment be in an alarm-free condition.

(2) PE Symbol/Locator Box Symbol Procedure — METHOD 2. This is a very desirable alternative method since it provides a check on site accuracy status that can be continuously available for display (for some PEs, beyond the MTI crossover). This technique includes the radar sensor, the data path, the CCCH system, the display channel processor, and the displays involved. Basically, the technique utilizes the runlength data now available to the operational programs. PEs can be displayed as "+" symbols. The PE is encircled by a geographical map symbol shaped similar to a box. The box is centered on the actual coordinates of the PE. The box defines

the range and azimuth tolerance limits (± 1/8 nmi, ± 2 ACPs) around the actual coordinates of the PE. Several PEs must be identified and located, as described in paragraph 517(1)(b). At least one PE must be available to accomplish verification. The geographical map symbology should be made selectable for viewing at the PVD as a special area function.

(a) Accuracy verification procedure:

1 Advise the radar digitizer sites to set the beacon offset switch to the ON position. Coordinate with ATAC/Air Defense Tactical Air Commands as required.

2 Initiate collimation analysis for each of the radar digitizer sites serving the ARTCC/Air Defense Tactical Air Command facilities.

3 Verify that collimation between beacon and search reports is within ± 2 ACPs. If the collimation errors exceed the tolerances, the NAS operations manager shall initiate corrective action and recheck collimation as appropriate. Restore beacon offset switches to normal.

4 Utilizing a PVD displaying preferred data for the radar being checked, center an adapted PE on the PVD. The PE should not be in a clutter area and the MTI gate may need to be moved to display the PEs chosen. Do not move MTI gate any closer in range than necessary to preclude possible data overload conditions.

5 Set PVD range switch to minimum range.

6 Adjust runlength threshold to cause the radar-reported PE to be displayed as a +, as necessary.

7 If outside of the locator box, register the radar-reported PE with the adapted PE by centering the + symbol in the adapted PE box. (Reference ZM message, NAS–MD–311).

8 Repeat above steps 1 through 4 for each radar site feeding the ARTCC.

9 If both PE location and collimation errors are within tolerances, accuracy service verification is complete.

10 Enter into the maintenance log that the accuracy parameters have been verified for all sites involved, noting exceptions as appropriate.

(b) Development of PE locator box symbology:

1 Select several PE coordinates for each radar site from the standard list prepared in 517(1)(b).

2 Refer to the tabulations of approximate slant/range errors for slant/range correction altitude (SLCA) of 3 and 4 nmi; see table 5–1.

3 Establish the box dimensions to optimize resolution accuracy for the range selected.

4 Adapt the selected PE location boxes for display continuously or as a selectable special area or blank key function if available. The system performance staff should refer to applicable adaptation guidance documentation for more detailed adaptation information.

5 Approximate relationships of display units/1/8 nmi and the selected range are as follows:

Selected Range nmi	Display Units/1/8 nmi
6	10.66
9	7.11
14	4.57
20	3.20
30	2.13

Table 5–1. APPROXIMATE SLANT/RANGE ERROR

(SLCA — 3 nmi)

Altitude (nmi)	1	2	3	4	5	6	7	8	9	10	11	12	13	14	15	16	17	18	19	20	21	22	23	24	25
10	8.82	7.97	7.22	6.56	5.98	5.47	5.02	4.63	4.28	3.98	3.71	3.48	3.26	3.07	2.90	2.75	2.61	2.48	2.37	2.26	2.16	2.07	1.99	1.91	1.84
9	7.80	6.97	6.24	5.61	5.07	4.60	4.20	3.85	3.55	3.28	3.05	2.85	2.67	2.51	2.36	2.23	2.12	2.01	1.92	1.83	1.75	1.67	1.61	1.54	1.40
8	6.77	5.96	5.27	4.69	4.19	3.77	3.41	3.11	2.85	2.63	2.43	2.26	2.12	1.98	1.87	1.76	1.67	1.58	1.51	1.44	1.37	1.31	1.26	1.21	1.16
7	5.74	4.96	4.31	3.77	3.33	2.97	2.67	2.41	2.20	2.02	1.86	1.73	1.61	1.51	1.42	1.33	1.26	1.20	1.14	1.08	1.03	.99	.95	.91	.87
6	4.69	3.95	3.35	2.88	2.51	2.21	1.97	1.77	1.60	1.47	1.35	1.25	1.16	1.08	1.02	.96	.90	.85	.81	.77	.74	.70	.67	.65	.62
5	3.61	2.93	2.42	2.03	1.74	1.51	1.33	1.19	1.07	.98	.89	.82	.76	.71	.67	.63	.59	.56	.53	.51	.48	.46	.44	.42	.41
4	2.48	1.89	1.50	1.23	1.03	.88	.77	.69	.61	.56	.51	.47	.43	.40	.38	.35	.33	.32	.30	.29	.27	.26	.25	.24	.23
3	1.08	.80	.62	.50	.42	.35	.31	.27	.24	.22	.20	.18	.17	.16	.15	.14	.13	.12	.12	.11	.11	.10	.10	.09	.09
2	.12	−.59	−.20	−.11	−.07	−.05	−.04	−.04	−.03	−.03	−.02	−.02	−.02	−.02	−.02	−.02	−.02	−.01	−.01	−.01	−.01	−.01	−.01	−.01	−.01
1	−.29	−.88	−.92	−.52	−.39	−.31	−.26	−.23	−.20	−.18	−.16	−.15	−.14	−.13	−.12	−.11	−.10	−.10	−.09	−.09	−.08	−.08	−.08	−.07	−.07

FLAT RANGE (nmi)

Table 5–1. APPROXIMATE SLANT/RANGE ERROR — (Continued)

(SLCA — 4 nmi)

Altitude (nmi)	1	2	3	4	5	6	7	8	9	10	11	12	13	14	15	16	17	18	19	20	21	22	23	24	25
10	8.63	7.79	7.04	6.38	5.81	5.31	4.87	4.49	4.15	3.85	3.60	3.36	3.15	2.96	2.81	2.66	2.52	2.39	2.28	2.18	2.09	2.00	1.92	1.85	1.78
9	7.59	6.76	6.05	5.43	4.90	4.44	4.04	3.70	3.41	3.15	2.92	2.73	2.55	2.40	2.26	2.14	2.03	1.92	1.83	1.75	1.67	1.60	1.54	1.47	1.42
8	6.53	5.73	5.04	4.47	3.98	3.58	3.24	2.94	2.70	2.49	2.30	2.14	1.99	1.87	1.76	1.66	1.57	1.49	1.42	1.36	1.29	1.24	1.18	1.14	1.10
7	5.45	4.68	4.05	3.53	3.11	2.76	2.48	2.24	2.04	1.87	1.73	1.60	1.48	1.39	1.30	1.23	1.16	1.10	1.05	1.00	.96	.92	.87	.84	.80
6	4.33	3.61	3.05	2.60	2.26	1.99	1.76	1.58	1.44	1.31	1.20	1.12	1.03	.96	.91	.85	.81	.76	.72	.69	.66	.62	.60	.58	.55
5	3.13	2.50	2.04	1.70	1.45	1.26	1.11	.98	.90	.81	.74	.68	.64	.60	.55	.52	.49	.46	.44	.42	.40	.38	.37	.36	.34
4	1.55	1.23	1.00	.83	.70	.60	.53	.47	.43	.38	.35	.33	.30	.28	.26	.24	.23	.22	.21	.20	.19	.18	.18	.16	.16
3	.58	−.20	−.18	0	.04	.05	.04	.05	.04	.04	.04	.03	.03	.03	.03	.03	.03	.03	.02	.02	.02	.02	.02	.02	.02
2	.12	−.59	−1.20	−.77	−.50	−.39	−.32	−.27	−.24	−.21	−.19	−.17	−.16	−.15	−.14	−.13	−.12	−.11	−.11	−.10	−.09	−.09	−.09	−.09	−.09
1	−.29	−.88	−1.42	−1.45	−.87	−.67	−.55	−.47	−.41	−.37	−.32	−.30	−.27	−.25	−.23	−.22	−.21	−.19	−.18	−.17	−.17	−.16	−.16	−.15	−.15

FLAT RANGE (nmi)

(3) Registration and Collimation Analysis Method — METHOD 3.

(a) Registration analysis error printouts will occur when the completed analysis calculations indicate errors exceeding the RDRD and RDAD range and azimuth error deviation threshold. Calculations are completed when the sample size parameter (RDSS) position reports are collected from mode C, discrete code targets in the acceptable areas of the radar site pairs being registered. These constraints are formidable during certain air traffic conditions. Use of the registration analysis method may require considerable time and extensive coordination of effort with AT controllers to assure that discrete code assignments and mode C replies can be used for registration. It is also essential to assure that judicious radar site pairings have been made in the adaptation in order to minimize calculation times, especially at centers with six or more radar sites feeding the centers. The following procedures are provided as general guidance in the event that this method of verification is to be used.

(b) General guidance (NAS operations managers):

1 Verify that the following parameters are set as follows, using the CP message as necessary:

RDSS	10
RDRD	0
RDAD	0
CDSS	50 (or adapted value)

2 Analyze the collimation printouts to assure that the beacon data is within ± 1/8 nmi and ± 2 ACP of radar data.

NOTE: Collimation is only available if the beacon offset (1/2 mile delay) is active, or the digitizer type is a CD−1.

3 Analyze the printouts and/or apply the registration error corrections to assure in-tolerance (± 1/8 nmi and ± 2 ACP) site error conditions.

(c) Where calculations are not completed by the start of live traffic control and other alternatives using PEs are not available, the NAS operations manager should advise the ATAC that operation can continue. If the broadband system meets certification criteria for accuracy, then the broadband radar standards would apply at the discretion of the ATAC.

(d) When error corrections derived from RTQC and/or the PE method have been applied, the system accuracy performance can be verified.

(e) Enter into the maintenance log that the system accuracy parameters have been verified, noting exceptions as appropriate.

(f) Restore RDSS, RDRD, RDAD, and CDSS to their normal operational monitoring values using the CP message.

518. CFAD/CRAD AUTOMATION SERVICE CERTIFICATION (NSCT OFFLINE).

a. General. This guidance is intended to assist the certifier in accomplishing the CFAD/CRAD automation service certification prior to a NAS system restart. It may also be used for other recertification activities. It can only be performed during system downtime and prior to a restart following a complete shutdown. The NSCT functional capabilities are detailed in paragraph 525. The proper outcome of the NSCT run, as determined by observation or intervention, is a critical part of the total data upon which the certifier bases the certification decision.

b. Detailed Procedures.

(1) Verify that the remote sites are operationally acceptable for configuring into the system.

(2) Initial program load (IPL) the NAS operational program with the "test" card in the initialization.

(3) Load the most/current version of NSCT.

(4) During the simulation run, verify all the capabilities built into the NSCT such as, CCCH/CDC reconfigurations, CCCH/DCC reconfigurations, CCCH/DCCR reconfigurations, or CCCH/DSR proper interfacing and input/output, RDP tracking, and conflict alert.

(5) Do an "STVR" without the "test" card.

(6) During live environment time, verify that range and azimuth accuracy, registration and collimation, radar data count, and status meet certification criteria.

(7) If certification criteria is not met, initiate appropriate corrective action and reverify affected parameters.

(8) Analyze available information (performance status of systems, and other pertinent informa-

tion). Complete certification action by entering the specified certification statement shown in appendix 1.

(9) Restore the system for operational AT use.

519. ONLINE CERTIFICATION TAPE.

a. Online Certification Tape (OLCT). The OLCT is modular in design; each module can be called up independently to exercise specific areas of the automation capability. It includes capability to run selected modules on a start/stop time option or on device options. Reconfiguration can be accomplished on a selected system or daily basis.

b. Use of OLCT. OLCT is usable online during NAS operation. Since it exercises the same functional capabilities as OLC, it will provide similar patterns and outputs for verification of the NAS automation services and systems. These expected outcomes are a part of the information that the certifier will use to make the decision on certification.

c. Users Information. The users information for OLCT was distributed to the field via Site Program Bulletin (SPB–CCC–188).

520. STATUS OF OTHER EN ROUTE FACILITIES.

a. System Engineer Position Function. The NAS operations manager's position is the central maintenance authority on watch. The NAS operations manager or assistant NAS operations manager on duty is expected to be cognizant of the operational condition of nonautomated en route facilities in the ARTCC control area. The condition of some adjacent ARTCC facilities may also be of concern to the AT mission in any particular ARTCC.

b. Logging. As appropriate, log facility status information in the facility maintenance log.

c. Restoration Actions. Initiate restoration actions appropriate to the requirements of the air traffic situation and in accordance with the latest edition of Order 6000.15.

521. RESERVED.

522. RDP RANGE AND AZIMUTH ACCURACY VERIFICATION DURING SHORT DURATION PRIMARY RADAR SHUTDOWN.

a. General. Essential shutdown of the primary radar system to the level that will still permit operation of the secondary radar system, can be expected as a normal radar system maintenance activity and may, of necessity, occur during the operational RDP time period. These shutdowns shall be fully coordinated. Operational use of the secondary radar system to provide beacon data input for the RDP automation capability requires that the primary triggering source and antenna rotational capability be operational throughout the primary system "shutdown" period. A totally powered-down condition of the primary system will not permit normal secondary system operation, unless beacon PRF and beacon antenna rotation are achieved by other means, and are maintained within normal primary/secondary system tolerances as specified in the current system technical handbooks/orders.

b. Detailed Procedures. In a radar system shutdown with secondary radar operation to be continued, the following special procedures apply:

(1) Prior to primary radar shutdown, perform the normal primary with secondary radar system certification procedures at the site and ARTCC involved. Reference the applicable procedures and parameters in this order and the latest edition of Order 6000.15.

(2) After successful verification based on normal radar/beacon system configuration and procedures, ascertain that the registration analysis is in progress and that the registration error of the radar site to be shut down is within acceptable tolerance values. If not, initiate corrective action at the site or by RTQC corrective messages as appropriate.

(3) As soon as certification under normal radar system configuration is achieved, both radar site and ARTCC staff shall make an appropriate entry indicating normal certification status and time.

(4) Advise the affected site(s) maintenance staff(s) that the primary radar shutdown can now begin.

(5) After a brief period of monitoring registration analysis printout(s) with beacon only data input, log site RDP certification status as fol-

lows:"_____ RADAR SYSTEM CERTIFIED FOR RDP WITH SECONDARY RADAR DATA ONLY. PRIMARY SYSTEM SHUTDOWN FOR MAINTENANCE, RADOME REFURBISHING, OR OTHER REASON(S) UNTIL _____ HOURS THIS DATE."

(6) Restoration of the radar site to normal configuration (a change in status) shall be followed by certification in accordance with normal certification requirements.

(7) Recertification during incident/accident or out-of-tolerance conditions may necessitate return to normal radar-beacon operation if registration calculations cannot be expected to be secured in a reasonable time period.

523. RDP RANGE AND AZIMUTH ACCURACY VERIFICATION USING GROUND–BASED TRANSPONDERS.

a. General.

(1) Azimuth and range accuracy certification may be accomplished using the procedures in paragraph 517. Three alternative techniques are provided, two of which are based primarily upon the availability of search radar permanent echoes, unobscured by clutter or other adverse radar environmental conditions AND the follow-on condition of sufficient beacon data reports for the operational program to complete the collimation analysis.

(2) The third method in paragraph 517 is based upon the registration and collimation analyses capability available in the RTQC portion of the NAS operational program. Since completion of these analyses requires meeting of minimum track data criteria for completion, some ARTCCs are unable to accomplish certification by this technique during the prestartup period. Consequently, they must rely heavily upon the search radar permanent echo/collimation techniques to certify site azimuth and range accuracy.

(3) Another technique is available for these sites experiencing problems with availability of uncluttered search radar permanent echoes and low traffic activity. The following technique uses the ground-based transponder as a beacon "permanent echo," and is a fall-back for the PE verification capability.

b. Conditions. This procedure requires an operable ground-based beacon transponder, sited to avoid active airways as much as possible and, preferably, viewable by both the radar beacon sites normally paired for registration analysis. The transponder should be preset to respond to an ATC approved non-operational beacon code.

c. Detailed Procedures.

(1) Beacon PE and Collimation Analysis — METHOD 1. These guidelines are generalized in form. Local variations that achieve the same basic goals may be used if desired.

(a) At the radar site, site technician will:

1 Complete the performance checks tasks for the radar, beacon, and digitizer equipment.

2 Verify that the ground-based transponder (beacon permanent echo) can be observed or printed, and that coordinates are within ± 1/8 nmi and ± 2 ACPs of the normal mean (average) value for that permanent echo. Refer to paragraph 517(1)(b) for a method of calculating the standard deviation and mean of the beacon PE.

3 Establish the beacon PE checks as a new item on the site Technical Performance Record.

4 If the beacon PE coordinates are within tolerance, indicate completion of this item on the form. Advise the NOM of the results.

5 If the beacon PE coordinate(s) are out-of-tolerance, the site technician shall advise the NAS operations manager that corrective action is required. Site personnel shall take appropriate action to correct the condition.

(b) At the ARTCC NAS operations manager (NOM) will:

1 Ascertain that the NAS operational program is cycling.

2 Verify the presence and alignment of the beacon and/or search test targets from all radar sites.

3 Initiate collimation analysis for each of the radar sites serving the ARTCC. COLLIMATION CALCULATION MAY BE EXPEDITED if the site is advised to set the beacon offset switch to ON during this procedure. Coordinate with air traffic as required.

NOTE: Collimation is only available if the beacon offset (1/2 mile delay) is active, or the digitizer type is a CD−1.

4 Verify that collimation between search and beacon reports (less any offset) is within ± 1/8 nmi, ± 2 ACPs, using the printouts from the collimation analysis. If the collimation errors exceed the tolerances, the NOM shall initiate corrective action and recheck collimation as appropriate.

5 If the beacon PE coordinates and collimation errors are within tolerance for all sites involved, RDP accuracy service certification is complete. Restore beacon offset to normal (if used).

6 Enter into the maintenance log that the accuracy of the serving radar digitizer sites has been certified, noting exceptions as appropriate.

(2) Beacon PE Symbol/Locator Box Symbol Procedures — METHOD 2. This technique is a very useful alternate method that can provide a continuously viewable symbol indicative of PE location accuracy. Basically, the technique uses the beacon PE slash symbol displayed on an ARTCC PVD. The symbol is enclosed by a GMLSDA map symbol shaped like a box. The GMLSDA map "box" is centered over the mean system coordinate location of the beacon PE. The box defines the range and azimuth tolerance limits (± 1/8 nmi, ± 2 ACPs) around this mean value.

(a) Certification procedure:

1 Verify that the beacon PE is visible on the PVD being used.

2 Advise the radar Digitizer sites to set the beacon offset switch to the ON position. (The PE symbol position will shift.) Coordinate with ATC/Air Defense Tactical Air Command as required.

3 Initiate collimation analysis for the radar site being certified.

4 Verify that collimation between beacon and search reports within ± 1/8 nmi, ± 2 ACPs (exclusive of offset). If the collimation errors exceed the tolerances, the NAS operations manager shall initiate corrective action and recheck collimation as appropriate. Restore beacon offset switch to normal after collimation check is completed.

5 Utilizing a PVD displaying preferred data for the radar system being checked, center an adapted geographical map box on the PVD.

6 Set PVD range switch to minimum range.

7 If the beacon PE symbol appears outside the geographical map box, recenter the PE symbol using the ZM message (see NAS−MD−311).

8 Repeat steps 1 through 5 for each radar site being certified.

9 If both PE location and collimation errors are within tolerances, accuracy certification is complete.

10 Enter into the maintenance log that the accuracy of the radar digitizer sites has been certified, noting exceptions as appropriate.

(b) Development of PE locator box symbology:

1 Determine the beacon PE coordinates associated with each radar site utilizing the beacon PEs.

2 Refer to the tabulations in paragraph 517b(2)(b) of approximate slant/range errors for SLCA of 3 and 4 nmi, as appropriate, for the PE involved.

3 Establish the box dimensions to optimize resolution accuracy for the range selected.

4 Adapt the selected beacon PE location box(es) for display continuously, or as a selectable special area or blank key function (if available). Refer to applicable adaptation guidance documentation for more detailed adaptation information.

5 Approximate relationships of display units/1/8 nmi and the selected range are as follows:

Selected Range nmi	Display Units/1/8 nmi
6	10.66
9	7.11
14	4.57
20	3.20
30	2.13

524. DISPLAY SYSTEM TRACKING VERIFICATION PROCEDURES–MANUAL ENTRY METHOD.

a. General. This procedure describes an online manual entry method for certifying the RDP tracking capability using the dynamic simulation (DYSIM) function of the operational program.

b. Discussion. This is a script-oriented technique that will generate test radar targets to allow exercising of the RDP tracking function. Use of this script procedure will assure that track crossover and turn detection are included to verify the operation of the tracking function. It will provide an alternate to the NSCT method of certifying the tracking function. The SIM target can be steered automatically, based on route segments from a flight plan or by operator inputs. Operation of DYSIM is internal to the ARTCC and is confined to only those sectors configured as training sectors.

c. Conditions.

(1) The simulation training (ST) message provides the capability to configure the desired training sector(s). This must be coordinated with appropriate air traffic control personnel.

Example DYSIM configuration steps:

(a) CS 3 — set adapted sectorization plan.

(b) CS 19/17 — assign the fix posting areas (FPAs) from sector 17 to sector 19.

(c) ST P17 — establish a "Pilot" (no strips) at sector 17.

(2) SIM flight input actions are entered through the category and function controls, alphanumeric keyboard, and trackball. All SIM target inputs at the configured PVD sector will be prefixed by "SIMULATION" at the category and function controls; only one function may be entered with each selection of the "SIMULATION" category.

d. Entry Procedures for SIM flights.

(1) The following filter keys are needed for test observation:

(a) CDC/DCC Primary

(b) MAP1

(c) Sector Boundary

(d) Full Data Blocks

(e) Select Beacon Targets

(f) All Field Select Keys

(g) ALT — (see Flight Plan Altitude)

(h) SIM Category DISPLAY Function (Enter "LS" for SIM and LIVE Display)

(2) Enter a map request (MR) on the SMMC IOT to display the appropriate sector map on the DYSIM configured PVD.

(3) Enter a flight plan using the DYSIM configured NRKM keyboard. The following serve as examples:

(a) xxxAF1 C500/A 340 CRL Eaaaa 180 CRL..CRL090070

where:

aaaa is approximately 5 minutes added to the current clock time.

(b) xxxAF2 C500/A 340 CLE Ebbbb 180 CLE..CLE360060

where:

bbbb is approximately 3 minutes added to the current clock time.

(4) Perform a flight plan readout (FR) for xxxAF1 and xxxAF2. Record the NAS computer identification (CID) numbers.

(5) At aaaa time or before, press the category SIM key, type xxxAF1, and entry via the ANK enter key. Record the SIM CID number. This is available from the first two numbers of the third line of the SIM data block.

(6) Press quick-action key (QAK), place the slew symbol over the radar symbol, depress the trackball enter key, input the appropriate NAS CID on the alphanumeric keyboard (ANK) and depress the ANK enter key.

(7) The SIM data block may be suppressed by selecting category SIM, function DISPLAY, entering the SIM CID, and depressing the ANK enter key.

(8) At bbbb time approximately, repeat steps (5) through (7) for aircraft xxxAF2.

(9) After the targets cross, verify both targets are being tracked properly:

(a) xxxAF1 — heading east

(b) xxxAF2 — heading north

(10) After the crossover verification is completed, selected category SIM and function HEADING, enter "260", space, SIM CID for xxxAF1, and depress the ANK enter key. Repeat for xxxAF2 using "190" degrees, and the SIM CID for xxxAF2.

(11) Both targets should perform turns of approximately 170 degrees and recross.

(12) After they recross, select category SIM function STOP, enter SIM CID, and depress the ANK enter key for both targets.

(13) DYSIM configuration may be terminated by entering "ST OFF" at an IOT.

(14) Data Block Definitions:

A1	A2	A3	A4	A5	A6	A7
B1	B2	B3	B4	C1	C2	C3
D1	D2	D3	E1	E2	E3	E4

A1–7	TDB– Aircraft Identification SIM– SIM Aircraft Identification
B1–3	TDB– Assigned Altitude SIM– Target Altitude
B4	TDB– Altitude Qualifier SIM– Mode C Capability
C1–3	TDB– Reported Altitude SIM– Target Heading
D1–3 D1–2	TDB– Computer Identification (CID) SIM– Computer Identification (CID)
D3	SIM– "A" or "M" Mode Operator
E1–4	TDB– Variable Data SIM– Target Beacon Code

(15) SIM Radar Target Symbols:

3 — Correlated primary
4 — Uncorrelated primary
5 — Correlated beacon
6 — Uncorrelated beacon

e. Log Entry/Completion.

(1) Following error-free completion of the procedure enter into the maintenance log that the system tracking functions have been verified.

(2) Advised AT of the completion of procedure and take appropriate restoration actions as required.

525. NAS SYSTEM CERTIFICATION TAPE (NSCT).

a. General. The NAS system configuration tape (NSCT) operates under and is run in conjunction with the NAS operational program and CDC/DCCR functional programs. Its function is to verify that the operational hardware and software can process and display FDP and RDP data.

The tape runs for approximately 32 minutes after initial loading with the NAS programs. The output data should be analyzed and corrective action taken by the NAS operations manager prior to releasing the system for control of air traffic.

b. Objective. To aid the NAS operations manager in verifying that the operational hardware and software making up the CFAD, CRAD, ATCC, and RDED, services and systems met the certification parameters specified in appendix 1 of this order.

c. Hardware Requirements. Complete CCCH, complete CDC/DCC system, operational programs, and all remote facilities online that are used in the daily center operations.

d. Basic NSCT Content Requirements.

(1) Sections. There are three basic sections in NSCT: reconfiguration, flight data processing, and radar data processing. They are described in the following subparagraphs.

(a) Reconfiguration.

1 Each major element of the complete system shall be reconfigured to verify CCCH reconfiguration capabilities. Element interfaces must be exercised following the reconfiguration of each new system.

2 The DCU reconfiguration actions of NSCT are based upon the assumption that three LDDAs are each loaded with NAS operational system. The GET message should be used for reconfiguration of tape control units (TCUs) and tape drives (TDs). The TCU/TD with the NSCT tape mounted cannot

be reconfigured without terminating NSCT operation. The NSCT reconfiguration actions can be accomplished via the "All" SIM option as described in the NAS Monitor Handbook. The SIM test card will define the reconfiguration options.

3 Sample reconfiguration sequence.

	Online	Offline
Startup system	1	2
1st reconfiguration	2	1
2nd reconfiguration	1	2

4 At the end of the NSCT run, manually reconfigure to the desired operational configuration.

(b) Flight Data Processing (FDP). Test messages are to be sent to all intracenter and remote input/output equipment to verify (a) that the equipment is operational and (b) that data can be processed accurately. The FDP service certification capability of NSCT shall exercise the following subsystems: KVDT, FDIO, FSP, IFDS, and CUE.

1 **KVDT.** Test all KVDTs using the GI and TD messages addressed to each KVDT. GI messages must include:

a Position identification (C1, E1, etc.)

b Logical device number (LDN) (200, 204, etc.)

c Device address (8D, 3F, etc.)

2 **FDIO (RCU/FSP).** Include necessary TD messages to check all FDIO facilities. Check the RCU interface and messages routing as evidenced by appropriate printouts to the individual FSPs.

3 **FDIO (keyboard).** The FDIO keyboards shall be checked using the TD messages as entered at the remote site.

4 **FSP.** Exercise all ARTCC FSPs using the GI message. Include position, logical device number and hexadecimal address. Include TD messages to all FSPs.

5 **CTS.** Should not be checked using NSCT because NSCT runs under the interval timer. Certification shall be accomplished using methods, parameters, and at intervals specified in appendix 1 of this order.

6 **IFDS (ARTS, NAS–NAS).** The TR messages shall be included to elicit response from all the adjacent facilities (ARTS and NAS–NAS). If certification is performed when the adjacent facility operational program is not cycling, a normal response will not be received from that facility. Certification should be performed by manual entry of the TR message as soon as practical after the adjacent facility program begins cycling.

7 **CUE (A/D Position CRDs).**

a Include TD messages to cause display of the CRD test pattern.

b Include invalid message format that causes sector # LDN # and CRD # to be written on the CRD; i.e., SIM00 000000 A32 SECTORXX"A32.LDN" 305.CRD"31

c Enable automatic message acknowledgement using the DBUG message defined in the NAS monitor handbook or NAS–MD–317. Quick-action and alphanumeric keyboards will be checked using manual techniques rather than the NSCT. It should be limited to a few selected entries.

(c) Radar Data Processing (RDP). Simulated radar, beacon weather, and symbol data is displayed on PVDs to verify that data can be processed and displayed. Also, the RTQC, conflict alert, and tracking features of the operational program are verified.

1 **RTQC Program Verification.**

a **Data Count Parameter.** Include verification of each of the following data count parameters (reference NAS–MD–310, section 4.0):

Type of Control	Parameter	Description
SD[1]	BERC	Beacon Returns
CD[2]	EICM	Incomplete Messages
CD	EIVB	Invalid Messages
CD	EIVM	Nonbeacon Messages w/Invalid Labels
SD	NCRC	Nonvalidated Mode C Checking Returns
SD	NRRC	Nonreinforced Beacon Returns

Type of Control	Parameter	Description
SD	NVRC	Nonvalidated Mode 3/A Beacon Returns
SD	PRRC	Primary Returns
CD	TRPC	Transmission Parity Error Count

[1]SD = a special parameter (dynamic)
[2]CD = a center parameter (dynamic)

Checking is accomplished by forcing data count printouts and/or inducing error conditions. Printout is forced by lowering the parameter to a value near the lower limit of its range. Errors can be induced by using the message (MESAG) card specifying overlap (OVL) conditions. See NAS–MD–320, table B–1 for the specific field designations required.

b Status Message. Include capability to verify that change in status will produce an appropriate status message. Test can be limited to one radar site in the ARTCC control area. Use the MESAG card format to induce a status change. Refer to NAS–MD–320, appendix B for bit pattern details.

c RTQC Test Target (Beacon). Include capability to verify that out-of-tolerance beacon RTQC test target parameters will produce an appropriate error message printout. Use of the MESAG card format to introduce out-of-tolerance conditions in the following fields of the RTQC test message:

Mode 3/A Code
Altitude
Range
Azimuth

After checking for proper response to error conditions, introduce RTQC test messages with intolerance conditions to verify normal operation.

d RTQC Test Target (Search). Include capability to verify that out-of-tolerance search RTQC test target parameters will produce an appropriate error message printout. Use the MESAG card format to introduce out-of-tolerance conditions in the following fields of the RTQC test message:

Runlength
Range
Azimuth

After checking for proper response to error conditions, introduce RTQC test messages with intolerance conditions to verify normal operation.

e Missing Data Conditions. Include capability to verify that missing beacon and search data status messages and beacon/search RTQC test messages will generate the appropriate NAS operational program error printouts. Correct the error conditions and verify that error printouts are no longer outputs.

f Registration. Include capability to verify that this portion of the RTQC program will calculate registration errors correctly, and will provide an accurate indication of the magnitude of the error in the printout to the NAS operations manager. Using CSITE cards, introduce a range error of ± 1/2 nautical mile and an azimuth error of ± 9 ACPs to verify proper calculation and printout. Apply correction to the registration errors and verify calculated values are the same as the applied values.

g Collimation. Include capability to verify that this portion of the RTQC program will correctly calculate collimation errors and will provide an accurate indication of the magnitude of the error in the printout to the NAS operations manager. Using PLANE and CSITE cards, introduce a range error of ± 3/8 nautical mile and ± 11 ACPs to verify proper calculation and printout. Apply correction to the collimation errors and verify calculated values are the same as the applied values.

2 Situation Display Tests. Include capability to display test patterns on all adapted displays with the exception of the SMMC. This pattern will provide the means to verify alignment, formats, and display presentation quality. It should include all class types of displayed information presented on the displays. The test pattern should be displayed throughout the NSCT run period where possible.

3 Tracking and Conflict Alert.

a General. Include the capability to check the NAS operational program's tracking and conflict alert capabilities. The simulated track and conflict situations are illustrated, by display area designation, in the following subparagraph.

b Display Area. Four display areas depict the desired tracks, weather symbology, and conflict situations.

Display area 1, figure 5–1, will make use of a search (primary) radar trail to test a turning track.

A series of 90 degree turns are included to follow the outside edge of a weather area.

Display area 2, figure 5−2, will be used to depict crossing track conflict situations.

Display area 3, figure 5−3, will be used to depict search (primary) tracking through clutter.

Display area 4, figure 5−4, will be used to depict overtaking and head-on conflict situations. Track data requirements are included on the illustrations for each display area.

c Sample Composite ARTCC Display Pattern. This illustration, figure 5−5, a composite of the display area patterns and other tests featured, depicts the type of displays that should be generated by NSCT at any ARTCC. Tracks are included to verify the registration and collimation features of the operational program. These tracks must be located in the geographical areas making them eligible for registration calculations. Other emergency conditions should be tested and may be displayed as shown in the sample composition ARTCC display.

4 Weather Display. Include capability in NSCT to verify the proper display of weather information. The outer contour lines portion of the weather display should be run during the first minutes of the NSCT run. They should be displayed for each of the ARTCC radar sites. WTHER and CSITE cards are used to define the characteristics of the display to be generated. An example of a WTHER card that will generate the desired weather pattern over a hypothetical ARTCC is completed as shown in table 5−2.

TABLE 5−2. WEATHER DISPLAY

	Start Time	Stop Time	Type Contour	X/Y1	X/Y2	X/Y3	X/Y4
WTHER	000000	000500	PT	177/195	710/195	710/630	170/630

The pattern may be displayed on the SMMC situation display alone. The use of the weather pattern displays can be enhanced by utilizing special geographical maps included in the adaptation for use at the SMMC situation display during certification and for other performance analysis purposes. Some useful special geographical map capabilities include the following: azimuth division area (ADA) outlines, range markers, sector boundaries, radar sites and permanent echo locations, as well as outlines of preferred radar sort box (RSB) assignments in the ARTCC radar coverage area.

5 Strobe. Include the capability to verify the proper display of the strobing function. This simulation feature is entered using the PLANE card. Table 5−3 gives samples of PLANE cards used to enter beacon (B) and primary (P) type strobing displays.

TABLE 5−3. STROBE FUNCTION

PLANE	000100	DA505	002900	B	560	416	600	000	000		3	10	100
(for beacon)													
PLANE	000100	DA506	000800	P	360	416	100	000	000	100	3	10	100
(for primary)													

(2) Program Options, Control, and Run Time. There are numerous options available for inclusion within the NSCT. However, the NSCT should be designed to facilitate NAS operations manager analysis, meet the basic requirements outlined herein and be completed within approximately 35 minutes. Test and SIM control cards are the only control cards required for use NSCT. Operator inputs are not required following initial loading and the basic functions are exercised within the running time of the NSCT. Operator inputs such as TD, TR messages can be made during the NSCT run.

e. Additional Guidelines. Site program bulletins, the NAS monitor handbook and the SIM subgroup manuals should be referenced for additional

guidance in developing a site-adapted NSCT to need the site requirements.

526. QUICK ANALYSIS OF RADAR SITES (QARS) PROCEDURES.

a. Objective. This procedure uses the QARS program in the offline CCCH system to permit an indepth quantitative analysis of radar/beacon performance. The procedure may be used to verify the narrowband radar site coverage, but is normally used for preventive maintenance. The data and subsequent analyses provide valuable trend data for the system performance staff, the radar site technicians and the NAS operations manager.

b. Discussion.

(1) The QARS program is a load and go, adaptation controlled program, that provides confirmation of ARTCC radar data acquisition and transfer system interfaces and operational status. It provides a more indepth analysis of radar site performance than is available from the NAS RTQC subsystem programs.

(2) The QARS program (D74C1) operates under control of MDM on the offline CCCH system. The MDM program operates either native or under the Virtual Machine/System Product (VM) control program. The QARS program uses either real-time radar data inputs or prerecorded radar data inputs. The real-time radar data is obtained directly from the radar data acquisition and transfer system and the prerecorded radar data is obtained from the NAS operational programs via magnetic tape.

(3) The QARS program is made up of two routines: a quality precheck to verify each radar system's interfaces, and an analysis of beacon tracks. The precheck provides a continuous scan-to-scan printout for each radar site containing the following data:

(a) Total beacon, search, maps, and status messages.

(b) The number and quality of messages received by the three high-speed channel adapters associated with each radar site.

(c) Validation of beacon and search RTQC messages.

(d) Status message checks for digitizer alarms and control switch settings.

(4) The data analysis routine will select beacon tracks with a track life greater than 20 scans to compute the following performance parameters, expressed in percentile, for each discrete beacon code:

(a) Beacon and search blip scan,

(b) Beacon and search splits,

(c) Reinforced rate,

(d) Collimation,

(e) Ring-around and reflections,

(f) Code validity and reliability.

c. Detailed Real-Time Radar Data Procedures.

NOTE: This procedure has considerable restrictions due to timing problems caused when operating QARS under VM with real-time radar data.

(1) Determine which high-speed data channel, if any, is not available on the offline PAM, and request the technician to turn off this channel at the radar site.

(2) Set the MDM virtual machine to a high priority and force off all other users, except standby NAS (this is to reduce the effect of the timing problems noted above). Also, restrict the number of radar sites being processed to a level that can be correctly handled by QARS, under the VM control program.

(3) Run the quality precheck routine of QARS for approximately 1 minute.

(4) Run the data analysis routine of QARS for approximately 30 minutes, dependent upon the number of radar sites and number of tracks in the system.

(5) Analyze the quality precheck printouts verifying that:

(a) Status messages indicate that the CD ran alarm free.

(b) The search and beacon RTQC messages were within tolerance.

(c) The data count was normal for the site(s).

(d) There is no more than one malfunction error (MAL) for every 2,000 messages, and no invalid message label (INV) errors.

(6) Analyze the QARS data analysis printouts and verify that the parameters are acceptable. If the listed parameters do not meet the specified criteria and the radar performance based on past analysis, it is unacceptable. Perform the required corrective action.

(7) Restore data channels to normal.

d. Detailed Prerecorded Radar Data Procedures.

(1) Start Online Radar Recording (ORR) for all sites on the NAS operational system (ZQ RECORD ALL ON).

(2) After a minimum of 30 minutes, stop the Online Radar Recording (ZQ RECORD ALL OFF).

NOTE: At facilities where ORRE is on continuously, the command CLOS ORR may be used to download the ORR data to tape, and leave the recording running.

(3) Verify the radar data record tape was unloaded and contains correct times.

(4) Create a CD record tape using the Online Radar Recording and Edit (ORRE) program, using the Online Radar Recording (ORR) tape previously created for input.

(a) Log on to a virtual machine and create an interactive system productivity facility (ISPF) file containing a control deck, with a file type of "CNTL". The control deck consists of one data card (MMDDYY) and one card for each radar adapter (CUU) to be tested, and includes the adapter number, and the start and stop time (CUU HHMMSS HHMMSS).

(b) Call up to the ARTCCPDF primary option menu and select the radar data analysis function. Then select the online radar record edit option from the radar data analysis function menu.

(c) Complete the required information on the panel and submit the job.

(5) Load the QARS program under MDM in the offline CCCH system.

(6) Run the quality precheck routine of QARS for approximately 1 minute.

(7) Add tape drive and have the CD record tape created by the ORRE job mounted.

(8) Run the data analysis routine of QARS for 30 minutes.

(9) Analyze the quality precheck printouts verifying that:

(a) Status messages indicate that the CD ran alarm free.

(b) The search and beacon RTQC messages were within tolerance.

(c) The data count was normal for the site(s).

(d) There are no more than 1 malfunction error (MAL) for every 2,000 messages, and no invalid message label (INV) errors.

(10) Analyze the QARS data analysis printouts and verify that the parameters are acceptable. If the listed parameters do not meet the specified criteria and the radar performance, based on past analysis is unacceptable, perform the required corrective action.

527. MANUAL ONLINE CERTIFICATION PROCEDURES (ALTERNATE TO SIMULATION PROGRAMS).

a. Objective. This paragraph provides an alternate, online manual entry technique for verification of the performance of the NAS operational hardware and software systems.

b. Discussion. The NAS system certification tape (NSCT) and the online certification tape (OLCT) are performance checking techniques based on recorded simulation data sets that elicit the desired system responses with minimal manual inputs. If these techniques are not available, the following procedures can serve as an alternate means of performance checking using direct manual inputs to the system.

c. Hardware/Software Requirements. The operational NAS system (RDP/FDP).

d. Conditions. These procedures are primarily "manual" in nature and partitioned to be performed at any convenient time throughout the 24-hour day. Since they will be performed during control of air traffic, advance coordination with the ATAC must be accomplished prior to performance of the procedures. Time or performance of these procedures should be chosen to minimize impact, such as during the midwatch or other slack traffic periods of the operational day. The entire set of procedures need not be completed during a single continuous period of time. Each

activity MUST be completed at least once during every 24-hour operational day.

e. Detailed Procedures.

(1) Manual Reconfigurations.

(a) Enter the appropriate messages to reconfigure the major elements CP, LDDA, IOC, BM, etc., of the complete system. Do not set elements unavailable unless they are inoperative.

Sample reconfiguration sequence:

	Online	Offline
Startup system	1	2
1st reconfiguration	2	1
2nd reconfiguration	1	2

(b) Allow a brief interval between reconfiguration actions to permit data processing and transfer of operations to each new system configured, to assure exercising of each new interface established. At CDC sites, keep the CDC loader program mounted throughout the reconfiguration test period to assure rapid program reload if required. Perform CDC and CCCH reconfigurations alternately so that the CDC trial timers will have time to run out.

(c) When reconfiguration actions are completed, restore the system to the desired operational configuration.

(2) Flight Data Processing (FDP). Test messages are to be sent to all intracenter and remote I/O equipment to verify:

(a) that the equipment is operational, and

(b) that data can be processed accurately. FDP service certification shall include the following subsystems: KVDT, FDIO, FSP, IFDS, and CUE (A/D positions CRDs only).

1 KVDT. Test all KVDTs using the GI and TD messages addressed to each KVDT. GI messages must include:

a Position identification (C1, E1, etc.)

b LDN (200, 204, etc.)

c Device address (8D, 3F, etc.)

2 FDIO (RCU/FSP). Enter necessary TD messages to check all FDIO facilities. Check the RCU interface and message routing as evidenced by appropriate printouts to the individual FSPs.

3 FDIO (keyboard). The FDIO keyboards shall be checked using the TD message as entered as the remote site.

4 FSP. Exercise all ARTCC FSPs using the GI message. Include position, logical device number, and hexadecimal address. Include TD messages to all FSPs.

5 CTS. See appendix 1, section 4c, of this order.

6 IFDS (ARTS, NAS–NAS). TR messages shall be entered to elicit response from all the adjacent facilities (ARTS and NAS–NAS). If certification is performed when the adjacent facility operational program is not cycling, a normal response will not be received from that facility. In this case, certification should be performed by manual entry of the TR message as soon as practicable after the adjacent facility program begins cycling.

7 CUE (A/D Position CRDs).

a Enter appropriate TD messages to cause display of the CRD test pattern.

b Include invalid messages to cause appropriate response on the CRT.

c Check quick-action and alphanumeric keyboards using a few selected entries.

(3) Radar Data Processing (RDP). The following guidelines define the general manual techniques to be used in certifying the RTQC, conflict alert, tracking, and weather display functional areas of the radar data processing capability:

(a) RTQC Program Verification.

1 For data count parameters, each of the following parameters are checked by forcing printouts and/or inducing error conditions. A printout is forced by lowering the parameter to a value near the lower limit of its range using the CP message:

Parameter	Description
PRRC	Primary Returns
BERC	Beacon Returns

Parameter	Description
NRRC	Nonreinforced Beacon Returns
NVRC	Nonvalidated Mode 3/A Beacon Returns
NCRC	Nonvalidated Mode C Checking Returns

2 Printouts for the following parameters may be checked by using the MESAG card in an OLCT, and inputting erroneous bit configurations via the OLC dummy radars; otherwise, the logic filters in the AU will cause the bad message to be discarded. These printouts shall be checked at least once a week during the NSCT run:

Parameter	Description
EICM	Incomplete Messages
EIVM	Nonbeacon Messages with Invalid Labels
EIVB	Invalid Messages

3 The AU logic shall be checked by using the display console unit to generate messages with the following faults:

a Messages that are incomplete, missing the proper EOM bits.

b Non-beacon messages with an invalid combination of bits in the label field.

c Invalid messages (CCCH bits 5 and 6 are 01 or 10).

4 The PAMRI maintenance manual should be referenced for details on preparing the appropriate test messages and introducing them into the AU data stream.

(b) Missing Data Conditions.

1 Introduce this condition by using the NPIO message or actually interrupting the input from one radar site. This should be done only after advance coordination with the air traffic watch supervisor, and preferably during a slack period of the day.

2 Correct the error conditions and verify that error printouts are no longer output.

(c) Registration, Collimation, and Status.

1 After coordination/concurrence of the ATC, contact one radar/CD site and have the beacon half-mile off-sets switch set to the ON position.

2 Verify that registration, collimation, and status message printouts are output.

3 Have the beacon off-set switch restored to normal.

4 Verify that the data from the radar/CD site has been restored to normal.

(d) PVD Tests.

1 Coordinate with ATC.

2 Select a number of PVDs to be tested, such that all PVDs will be checked at least once per month.

3 Call up the enhanced test pattern capability. Observe for proper display, data presentation quality, and key entry responses.

4 Terminate the tests and restore the PVDs to operational use.

(e) Tracking and Conflict Alert. This capability shall be checked using the procedure in paragraph 524.

(f) Weather Display Checkout.

1 After proper coordination with ATC, contact the selected radar/CD site to be used for the weather display test checkout.

2 Have the technician introduce a wedge test pattern by interconnection/switch settings on the Digitizer equipment.

3 Observe the pattern for a period in excess of 12 radar scan periods to permit full buildup.

4 Restore the Digitizer to normal operational conditions/settings.

528. NAS–AUTOMATED RADAR TERMINAL SYSTEM (ARTS) REGISTRATION.

a. General. The ARTCC RDP tracking function and the ARTS tracking function both develop aircraft position coordinates for aircraft within range of the serving radar facilities. Ideally, the position coordi-

nates from NAS or ARTS tracking function, for the same aircraft transitioning from center to terminal control (in handoff situations), should not exceed operationally acceptable tolerance criteria. The offline positional error analysis summary (PEAS) program identifies aircraft handoffs and determines positional differences between the two systems. The latest edition of FAA−4306R, Users Manual (PEAS) Program, provides information supporting the analysis procedure.

It also contains criteria applicable to the registration checkout.

b. PEAS Program. The PEAS program is a special offline program that operates under the control of the IBM Operating System (OS). It selects and identifies aircraft tracks in the NAS operational program that are handed off from the ARTS facility. The input data is derived from the system analysis recording (SAR) tapes prepared under the NAS operational program during system operation. The SAR track data is appropriately edited for use with PEAS, using the data analysis and reduction tool (DART).

c. Action. NAS−ARTS registration procedures shall be performed on an as-required basis, when registration becomes unacceptable.

529.539. RESERVED.

Section 2. OTHER MAINTENANCE TASK PROCEDURES

540.−569. RESERVED.

Section 3. SPECIAL MAINTENANCE PROCEDURES

570.−599. RESERVED

CHAPTER 6. FLIGHT INSPECTION

600. GENERAL

Flight inspections are made to verify the overall performance of radar, navigational aids and air/ground communications systems. The instructions for flight inspection are contained in the latest edition of Order OA P 8200.1, United States Standard Flight Inspection Manual and Order 6350.12, CD Subsystem Integration Test Procedures Manual. Flight inspections are required prior to commissioning of a facility, periodically as specified by this directive and the flight inspection manual, and when requested by the Air Traffic Facility Chief, or Regional Director.

601. NARROWBAND SEARCH/BEACON FLIGHT CHECKS.

Flight checks shall be performed prior to facility commissioning, using the subtest 44 and 45 procedures contained in Order 6350.12. Verify the radar site locations (normally only checked during new radar installation) and target position reporting accuracy, using the subtest 44 procedures. Determine if alignment corrections are required, and implement any required corrections in accordance with the procedures provided.

Develop and maintain a search/beacon data base as described in the subtest 45 procedures. The test data is used to determine the existence of problems in the radar coverage area, such as collimation, registration, detection, search splits, and beacon false targets. This data will also be used to evaluate system improvements and monitor for system deterioration.

602.–610. RESERVED.

APPENDIX 1. CERTIFICATION REQUIREMENTS

1. GENERAL

This appendix contains certification requirements for surveillance display services provided in the en route air traffic control environment, and certification requirements for constituent systems used to provide these services. Refer to the latest edition of Order 6000.15, General Maintenance Handbook for Airway Facilities, for general guidance on the certification of services and systems.

2. SERVICES

Surveillance services provide a means for air traffic control personnel to determine aircraft position and course during aircraft operations.

3. SYSTEMS

Remote radar (a.k.a. primary radar) and interrogation (a.k.a. secondary radar or beacon interrogator) systems, centralized, distributed, or back-up surveillance processing systems, and radar data entry and display systems are utilized to provide these services. Each system is certified as a Surveillance Radar System (SRS), Surveillance Interrogation System (SIS), Surveillance Processing System (SPS), or Surveillance Display System (SDS) in accordance with this appendix.

4. EXCEPTIONS

Order 6000.15 permits certification with exceptions where a service provides somewhat less than its full functional benefit but is still useable, e.g., one radar site is taken out of service, yet other radar sites are still contributing to the en route surveillance service. Outstanding exceptions may be certified in accordance with the following tables for the specific purpose of removing the exceptions. Periodic certification of elements is not required, since these parameters are incorporated into the respective service or system certifications.

5. FUTURE SYSTEMS

For future planning purposes, systems that provide the above services or are used for testing or prototyping shall be certified in accordance with Order 6000.15.

Section 1. COMPOSITE FLIGHT DATA PROCESSING (CFAD) SERVICE

Service	*Certification Parameter*	*Ref. Par. Stds & Tol/ Limits*
CFAD	FDP processing capability	Par. 71a
	AND:	
	FDP input and output	Par. 71b

NORMAL CERTIFICATION INTERVAL: Daily

MAXIMUM CERTIFICATION INTERVAL: 36 hours

PERSON RESPONSIBLE FOR CERTIFICATION: NAS Operations Manager

CERTIFICATION ENTRY IN FACILITY MAINTENANCE LOG: During transition with DSR: CFAD with CDC Certified; CFAD with DCCR Certified; CFAD with DSR Certified; CFAD with CDC and DSR certified; CFAD with DCCR and DSR certified. Before and after transition: CFAD Certified

Section 2. COMPOSITE RADAR DATA PROCESSING (CRAD) SERVICE

Service	*Certification Parameter*	*Ref. Par. Stds & Tol/ Limits*
CRAD	Satisfactory radar coverage as determined at the radar sites.	The latest edition of Orders 6340.5, 6340.6, 6340.8, 6350.8, 6360.1, 6360.14, 6340.14, (ARSR−3), 6340.26 (ARSR−4), and 6350.21 (CD−2)
	AND:	
	Narrowband radar site coverage	Par. 72a and Users Manuals for QARS, RARRE and RSCANS
	AND:	
	Range and azimuth accuracy	Par. 72b
	AND:	
	Display accuracy	Par. 72c
	AND:	
	RDP and tracking	Par. 72d
	AND:	
	Data display and entry	Par. 72e
	AND:	
	Video presentation	Par. 72f
	AND:	
	System error detection, analysis, and correction capability	Par. 72g
	AND:	
	Radar data transfer	Par. 72h

NORMAL CERTIFICATION INTERVAL: Daily

MAXIMUM CERTIFICATION INTERVAL: 36 hours

PERSON RESPONSIBLE FOR CERTIFICATION: NAS Operations Manager with radar site support

CERTIFICATION ENTRY IN FACILITY MAINTENANCE LOG: During transition with DSR: CRAD with CDC Certified; CRAD with DCCR Certified; CRAD with DSR Certified; CRAD with CDC and DSR certified; CRAD with DCCR and DSR certified. Before and after transition: CRAD Certified

Section 3. RESERVED

Section 4. AIR TRAFFIC CONTROL COMPUTER (ATCC) SYSTEM

Service	*Certification Parameter*	*Ref. Par. Stds & Tol/ Limits*
a. CCCH Subsystem		
Data processing and control of the NAS air traffic control system.	Satisfactory operation of the CCCH system with maximum reconfiguration using ATCC module of OLC, or OLCT.	Par. 74a
b. KVDT Subsystem.	Satisfactory transfer of data from the CCCH to the printer as checked by SCOPE, NAS TD message, OLC, OLCT, or NSCT.	Par. 74b
Local means for entering and receiving data from the Central Computer Complex Host (CCCH).	**AND:** Correct device response, registration and printing of data as checked by SCOPE, NAS TD message, OLC, OLCT, or NSCT.	
c. CTS Subsystem. Provides digital time of day data.	Satisfactory data transfer of time of day information as checked during SCOPE run and satisfactory operation with NAS operational program.	Par. 74c
d. CUE Subsystem. Transfer of data between CCCH and the controller "A" and "D" positions.	Satisfactory transfer of data from the CCCH to the Computer Readout Device as checked by SCOPE, OLC, OLCT, NSCT, or NAS TD messages. **AND:** Satisfactory transfer of data from the Computer Entry Device of the CCCH as checked by SCOPE or NAS TD messages. **AND:** Satisfactory reconfiguration of spare NRKM vs. each active NRKM.	CUE Instruction Book and par. 74d
e. IFDS Subsystem. **(1)** Transfer of digital data from CD/Radar Site to CCCH.	Satisfactory operation as determined from a QARS CD Quality Precheck, or a 5-minute run of the SCOPE CD subsystem module.	FAA−4306,QARS User's Manual, IFDS Instruction Book, and par. 72j
(2) Transfer of digital data between two CCCHs.	Satisfactory operation using the NAS TR/TD messages, the certification programs or a 5-minute SCOPE run*.	Par. 74e

Section 4. AIR TRAFFIC CONTROL COMPUTER (ATCC) SYSTEM

Service	*Certification Parameter*	*Ref. Par. Stds & Tol/ Limits*
(3) Transfer of digital data between Airport Traffic Control Tower (ATCT) and CCCH.	Satisfactory operation using the NAS TR/TD messages, the certification programs or a 5-minute SCOPE run*.	Par. 74e

*Using internal center loop-around technique.

NORMAL CERTIFICATION INTERVAL: Weekly

MAXIMUM CERTIFICATION INTERVAL: 14 days

PERSON RESPONSIBLE FOR CERTIFICATION: CCCH Technician

CERTIFICATION ENTRY IN FACILITY MAINTENANCE LOG: ATCC Certified

Section 5. CENTRAL COMPUTER COMPLEX HOST (CCCH) SYSTEM

Service	*Certification Parameter*	*Ref. Par. Stds & Tol/ Limits*
a. CCCH Elements.	Satisfactory operation, within the support processor system following satisfactory diagnostic testing below:	Par. 75a
(1) 3083 Processor	FET T2–T10	Par. 75a(1)
(2) 9672–RA4 Processor		
(a) 9672 Frame	Successful completion of the Power On Self Test and Checkout Test.	75a.(2)(a)
(b) 9672 Support Element	Successful completion of the Power On Self Test.	75a.(2)(b)
(c) Hardware Management Console	Successful completion of the Power on Self Test.	75a.(2)(c)
(3) 3880 Storage control unit.	OLTS T3880A	Par. 75a(3)
(4) 3380 Direct access storage.	OLTS T3380PSA and T3380PSB	Par. 75a(4)
(5) 3803 Tape control unit.	OLTS T3420D	Par. 75a(5)
(6) 3480 Cartridge tape control unit.	OLTS T3480A	Par. 75a(7)
(7) 3480 Cartridge tape unit.	OLTS T3480C	Par. 75a(8)
(8) 3274 Terminal control unit.	OLTS T3274A	Par. 75a(9)
(9) 3814 Switching unit.		
(a) Peripheral interface switch,	OLTS T3274A	Par. 75a(11)(a)
(b) Display channel interface switch.	MDM 71C2 routine 5 (CDC)	Par. 75a(11)(b)
(10) Reserved.		

Section 5. CENTRAL COMPUTER COMPLEX HOST (CCCH) SYSTEM (Continued)

Service	*Certification Parameter*	*Ref. Par. Stds & Tol/ Limits*
(11) Adapter Unit (AU)	Firmware diagnostic tests	Par. 75a(10)(b)
	AND:	
	MDM DCC51	Par. 75a(10)(c)
b. HOST Interface Device (HID)	Power On Self Test (POST)	Par. 75b (1)
	AND:	
	Server Diagnostics	Par. 75b (2)
	AND:	
	MDM	Par. 75b (3)
	Section 1, D7851000	
	AND:	
	Section 2, D7852000	
	AND:	
	Section 3, D7853000	
c. DSR Printer Control Unit	Power On Self Test (POST)	Par. 75c (1)
	AND:	
	MDM D7951	Par 75c (2)

NORMAL CERTIFICATION INTERVAL: Quarterly

MAXIMUM CERTIFICATION INTERVAL: 120 days

PERSON RESPONSIBLE FOR CERTIFICATION: CCCH Technician

CERTIFICATION ENTRY IN FACILITY MAINTENANCE LOG:

Without Exception:
CCCH certified.

With Exception:
CCCH certified except
(element designation).

Removing Exception:
CCCH (element designation)
certified.

Section 6. RADAR DATA ENTRY AND DISPLAY (RDED) SUBSYSTEM (CDC–SITE DEPENDENT)

Service	*Certification Parameter*	*Ref. Par. Stds & Tol/ Limits*
a. Processing and Display of Radar Data on PVD.	Satisfactory display of data on PVD as verified using SCOPE, nonstartup CDC operational program, OLC, OLCT, NSCT or the online enhanced test pattern.	Par. 76a
b. Processing Control and Display of Data Between CCCH and DED/RCRD.	Satisfactory entry and display of data as verified using SCOPE, nonstartup CDC operational program, OLC, OLCT, NSCT or the online enhanced test pattern.	Par. 76b
c. CDC System Reconfiguration.	Successful reconfiguration and startover, as verified using SCOPE, nonstartup CDC operational program, OLC, OLCT, or NSCT.	Par. 76c

NORMAL CERTIFICATION INTERVAL: Weekly

MAXIMUM CERTIFICATION INTERVAL: 14 days

PERSON RESPONSIBLE FOR CERTIFICATION: CDC and Display Technicians, jointly

CERTIFICATION ENTRY IN FACILITY MAINTENANCE LOG: RDED Certified

Section 7. COMPUTER DISPLAY CHANNEL (CDC) SYSTEM

Service	*Certification Parameter*	*Ref. Par. Stds & Tol/ Limits*
a. CDC Element		
(1) Data processing storage of data base and central control of CDC system.	Successful cycling of the IOC routine of the OLM program with MDM D71C2, routine 5. **AND:** Successful cycling of the Central Processor routines of the OLM Program. **AND:**	Par. 77b(1)
	Successful cycling of the BM routines of the OLM program.	Par. 77b(2)
(2) Refresh storage, conversion, and routing of data.	Successful cycling of the refresh subsystem test (RSST) routines of the OLM program.	Par. 77b(3)
(3) Radar display, display control and data entry.	Successful cycling of the PVD routines of the OLM program. **AND:** Successful cycling of the RKM routines of the OLM program.	
b. Reconfiguration.		
Automatic fault sensing, fault analysis, and reconfiguration.	Successful cycling of the test cart configuration control monitor (CCM) unit test.	Par. 77b(4)
c. PVD Video Presentation.	Satisfactory brightness, contrast and resolution.	CDC Radar Console Instruction Book

NORMAL CERTIFICATION INTERVAL: Quarterly

MAXIMUM CERTIFICATION INTERVAL: 120 days

PERSON RESPONSIBLE FOR CERTIFICATION: CDC and Display Technicians, jointly

CERTIFICATION ENTRY IN FACILITY MAINTENANCE LOG: CDC Certified

Section 8. RADAR DATA ENTRY AND DISPLAY (RDED) SUBSYSTEM (DCC–SITE DEPENDENT)

Service	*Certification Parameter*	*Ref. Par. Stds & Tol/ Limits*
a. Processing and Display of Radar Data on PVD.	Satisfactory display of data on PVD as verified by running D98B1 RTN 1–5, 7, 9, and 10, SCOPE, OLC, OLCT, NSCT or online enhanced test pattern.	Par. 78a
b. Processing, Control and Display of Data Between CCCH and DED/RCRD.	Satisfactory entry and display of data as verified by DB8B1 all RTNs, DB8B2 RTNs 1–3, DB8B3 with sense bits 22 and 23 set, SCOPE, OLC, OLCT, or online enhanced test pattern.	Par. 78b
c. DCC System Reconfiguration and Startover Mode Capability (Initiate, Resume and Reconstitute Data Base).	Successful reconfiguration of DCC element(s) and startovers in all three modes, as verified using manual procedures or OLC, OLCT or NSCT simulation programs or scope.	Par. 78c
d. Data Processing and Control of the RDED System.	Satisfactory operation of the DCC system with maximum element configuration using DD8A0 and SEVA (2 passes) or OLC, OLCT, or NSCT.	Par. 79a

NORMAL CERTIFICATION INTERVAL: Weekly

MAXIMUM CERTIFICATION INTERVAL: 14 days

PERSON RESPONSIBLE FOR CERTIFICATION: DCC and display Technicians, jointly

CERTIFICATION ENTRY IN FACILITY MAINTENANCE LOG: RDED Certified

Section 9. DISPLAY CHANNEL COMPLEX (DCC) SYSTEM

Service	*Certification Parameter*	*Ref. Par. Stds & Tol/ Limits*
a. 9020E Elements. Provides processing, storage, and input/output control for the total DCC system.	Satisfactory operation of a Simplex in a minimum system configuration mode, using SEVA, 2 passes as needed to evaluate element functions. Additional parameter testing is required for the CE, IOCE, SE, and DE as listed below.	Par. 79b
	CE	
	Satisfactory operation of element error checking circuitry using: CE FLT, 13BA, and CE ROS, 13CD	Par. 79b(1)
	AND:	
	Satisfactory operation of program interrupt error checking using: 11E4−11EE.	
	IOCE	
	Satisfactory operation of IOCE error checking circuitry using FLT−2, 1501.	Par. 79b(2)
	AND:	
	Satisfactory operation of program interrupt error checking using 106B−106D.	
	AND:	
	Satisfactory operating using FLT−1 and FLT−3.	
	SE, DE	
	Satisfactory operating using diagnostic 22A0, 22A4, and 22AA.	Par. 79b(3)
b. Configuration Console (CC). Provides three basic functions for the 9020E subsystem. **(1)** System Console.		Par. 79b(4)

Section 9. DISPLAY CHANNEL COMPLEX (DCC) SYSTEM (Continued)

Service	*Certification Parameter*	*Ref. Par. Stds & Tol/ Limits*
Provides those indicators and controls necessary for the effective monitoring and operation of the 9020E system.	Satisfactory operation as verified using D6CA6.	
(2) Reconfiguration Unit.		
Provides duplex paths for reconfiguration and monitoring Display Generator (DG) and Radar Keyboard Multiplexer (RKM) units and the 9020E 2701 DAU.	Satisfactory operation as verified using D9051.	
(3) DG and RKM.		
Status Reporting Unit provides indicators for the effective system monitoring of the DG and RKM units.	Satisfactory operation as verified using D6CA6.	
c. Data adapter Unit (DAU−2701).		
Provides control and interface conversion to the RKMs and provides input/output data information.	Correct control, response, error checking, and transfer of digital information as verified using SEVA (2 passes), OLC, OLCT, NSCT, or SCOPE. **AND:** Correct input/output operation as verified by SCOPE, or Diagnostic Programs DB051, B052, B0A1.	Par. 79b(5)
d. Tape Control Unit (TCU)/Tape Drive (TD).		Par. 79b(8)
(1) TCU.		

Section 9. DISPLAY CHANNEL COMPLEX (DCC) SYSTEM (Continued)

Service	*Certification Parameter*	*Ref. Par. Stds & Tol/ Limits*
Provides communication between selected tape units and the 9020 computer systems data channels.	Satisfactory data transfer between selected tape units and the 9020 systems as checked using SEVA (2 passes).	Par. 79b(8)
(2) TD.		
Reads magnetic tape information and writes information on magnetic tape.	Satisfactory reading and writing of magnetic tapes as checked using D4050 thru D4060..	Par. 79b(8)
e. RKM.		
Communication between the computer and PVD controls, RCED, and RCRD.	Successful cycling of applicable RKMM and RKM series of diagnostics.	Par. 79b(9)(a)
f. DG.		
Data display and video presentation.	Successful cycling of applicable DG series of diagnostics.	Par. 79b(10)(a)

NORMAL CERTIFICATION INTERVAL: Quarterly

MAXIMUM CERTIFICATION INTERVAL: 120 days

PERSON RESPONSIBLE FOR CERTIFICATION: DCC and display Technicians, jointly

CERTIFICATION ENTRY IN FACILITY MAINTENANCE LOG: DCC Certified

Section 10. RESERVED

Section 11. DARC RADAR DATA PROCESSING (DRAD) SERVICE

Service	*Certification Parameter*	*Ref. Par. Stds & Tol/ Limits*
DRAD	Satisfactory radar coverage as determined at the radar site.	The latest edition of Orders 6340.5, 6340.6, 6340.8, 6350.8, 6360.1, 6360.14, 6340.14 (ARSR−3), 6340.26 (ARSR−4), and 6350.21.
	AND:	
	Narrowband radar site coverage	Par. 81a
	AND:	
	Range and azimuth accuracy	Par. 81b
	AND:	
	Display accuracy	Par. 81c
	AND:	
	RDP and tracking	Par. 81d
	AND:	
	Data display and entry	Par. 81e
	AND:	
	Video presentation	Par. 81f
	AND:	
	System error detection, analysis and correction capability.	Par. 81g
	AND:	
	Radar data transfer.	Par. 81h

NORMAL CERTIFICATION INTERVAL: Daily

MAXIMUM CERTIFICATION INTERVAL: 36 hours

PERSON RESPONSIBLE FOR CERTIFICATION: NAS Operations Manager or DARC Technician

CERTIFICATION ENTRY IN FACILITY MAINTENANCE LOG: During transition with DSR: DRAD with PVDs Certified; DRAD with DSR consoles certified; DRAD with PVDs and DSR consoles certified. Before and after transition: DRAD Certified

Section 12. RADAR DATA ENTRY AND DISPLAY (RDED) BACKUP SUBSYSTEM

Service	*Certification Parameter*	*Ref. Par. Stds & Tol/ Limits*
a. DEK/IOT.	Satisfactory transfer of data from DARC to the printer. Correct device response. Error free transfer of data from the keyboard to the CP.	Par. 82a(1)
Provides local means for entering and receiving data from the DARC.		
b. GPO.	Satisfactory transfer of data from the CCCH to the CP.	Par. 82a(2)
Provides means for receiving printout flight information from the CCCH.	**NOTE:** This feature is not essential to DARC operation, hence, certification is necessary only if it is to be used before the next certification interval.	
c. R−Console.	Satisfactory transfer of data from the R−Console to DARC.	Par. 82a(3)
Provides each radar controller with a means of entering data into DARC.		
d. Display Video Presentation.	Operationally satisfactory symbology, data blocks, lists and general presentation quality at all displays.	Par. 82a(4)
e. System Control.	Correct status reporting and reconfiguration.	Par. 82a(5)

NORMAL CERTIFICATION INTERVAL: Weekly

MAXIMUM CERTIFICATION INTERVAL: 14 days

PERSON RESPONSIBLE FOR CERTIFICATION: DARC Technician

CERTIFICATION ENTRY IN FACILITY MAINTENANCE LOG: RDED Backup Certified

Without Exception:
RDED Backup certified.

With Exception:
RDED Backup certified except (PVD console position designation) (position number).
RDED Backup certified except (DSR R−Console console position designation) (position number).
RDED Backup certified except (DARC reconfigurable element designation).

Removing Exception:
RDED Backup (console position designation) (position number) certified.
RDED Backup (DARC reconfigurable element designation) certified.

Section 13. DIRECT ACCESS RADAR CHANNEL (DARC) SYSTEM

Service	*Certification Parameter*	*Ref. Par. Stds & Tol/ Limits*
DARC Elements.	Successfully cycling of the maintenance program in the system mode will be used to demonstrate items (a) through (g).	Par. 82b
a. Data Processing.	RDDU, CP, DP.	Par. 82b(1)
b. Refresh Storage and Output	DP memory and refresh output controller (ROC)	Par. 82b(2)
c. Display Control and Data Entry Interfaces.	RCC, CCCH.	Par. 82b(3)
d. Peripherals.	DEK/IOT, LP	Par. 82b(4)
e. Automatic Fault Sensing.	CPM.	Par. 82b(5)
f. Spare CP.	Successful cycling of the CP system test program.	Par. 82b(6)
g. CP to Disk Read/ Write Capability.	Successful operation of disk test programs. **OR:** Manual selection of programs that certify the above capabilities individually.	Par. 82b(7)
h. Radar Data Distribution Unit (RDDU)	Successful cycling of firmware diagnostic tests.	Par. 82b(9)

NORMAL CERTIFICATION INTERVAL: Quarterly

MAXIMUM CERTIFICATION INTERVAL: 120 days

PERSON RESPONSIBLE FOR CERTIFICATION: DARC Technician

CERTIFICATION ENTRY IN FACILITY MAINTENANCE LOG: DARC Certified

Section 14. RADAR DATA ENTRY AND DISPLAY (RDED) SUBSYSTEM (DCCR)

Service	*Certification Parameter*	*Ref. Par. Stds & Tol/ Limits*
a. Processing and Display of Radar Data on PVD.	Satisfactory display of data on PVD as verified by running online or offline certification program, online test pattern or SCOPE.	Par. 83a
b. Entry, Processing, and Display of Data (CED/CRD).	Satisfactory entry and display of flight data using online or offline certification program, online test pattern or SCOPE.	Par. 83b
c. DCCR System Reconfiguration and Startovers.	Satisfactory reconfigurations and startover modes using online or offline certification programs, or manual entries with the NAS operational program, or SCOPE or DCCMNT D71D1 SEG 9 Test 17.	Par. 83c
d. System certification	CCCH and DCCR certification is current.	

NORMAL CERTIFICATION INTERVAL: Weekly

MAXIMUM CERTIFICATION INTERVAL: 14 days

PERSON RESPONSIBLE FOR CERTIFICATION: DCCR and display Technicians jointly

CERTIFICATION ENTRY IN DCC LOG: RDED Certified

Section 15. DISPLAY CHANNEL COMPLEX REHOST (DCCR) SYSTEM

Service	*Certification Parameter*	*Ref. Par. Stds & Tol/ Limits*
a. DCCR Processor, 9221		
Provides processing, storage and input/output control for the total DCCR system	Successful completion of the Extended Processor Test, Processor Input/Output Test, and a 5 minute run of the System Exerciser Test	Par. 84b(1)
b. System Console PS/2		
Control and operation of 9221.	Successful completion of the Power On Self Test	Par. 84b(2)
c. Establishment Controller 3174−21L		
Provides interface to RIOT and printers	Successful completion of the System Exerciser Test	Par. 84b(3)
d. Multi-System Channel Communications Unit (MCCU)		
(1) Provides interface between CCCH and DCCR	Successful completion of the System Exerciser and OLTS 3150A and 3150STS.	Par. 84b(4)
(2) Provides interface between DCCR1 and DCCR2	Successful completion of the OLTS 3150A and 3150STS.	Par 84b(4)
e. Tape Control Unit (TCU)		
Provides communication between tape units and 9221 processor	Successful completion of the System Exerciser and OLTS 3480A.	Par. 84b(5)
f. Tape Drive (TD)		
Read and Writes data on magnetic tape	Satisfactory reading and writing of magnetic tapes as checked using System Exerciser and OLTS 3480A.	Par. 84b(6)
g. Replacement I/O Terminal (RIOT)		

Section 15. DISPLAY CHANNEL COMPLEX REHOST (DCCR) SYSTEM (Continued)

Service	*Certification Parameter*	*Ref. Par. Stds & Tol/ Limits*
Provides control and status reporting of DCCR	Successful completion of the Power On Self Test	Par. 84b(7)
h. Display Controller (DC)		
Provides the interface between 9221 and PVD	Successful execution of all DC diagnostics from 9221 to all DC's or SCOPE or DCCMNT D71D1 SEG 9 Test 17	Par. 84b(8)

NORMAL CERTIFICATION INTERVAL: Quarterly

MAXIMUM CERTIFICATION INTERVAL: 120 days

PERSON RESPONSIBLE FOR CERTIFICATION: DCCR and display Technicians jointly

CERTIFICATION ENTRY IN DCC LOG: DCCR Certified

Section 16. DISPLAY SYSTEM REPLACEMENT (DSR) RADAR DATA ENTRY AND DISPLAY (RDED) SUBSYSTEM

Service	*Certification Parameter*	*Ref. Par. Stds & Tol/ Limits*
Processing and display of radar data on the R−console.	Satisfactory display of data on the R−Console as verified by running on-line or off-line certification programs, or the on-line test pattern.	Par. 85a
Entry, processing, and display of data (R−CRD) view.	Satisfactory entry and display of data as verified by running on-line or off-line certification programs, or the on-line test pattern.	Par. 85b
DSR system reconfiguration.	Satisfactory reconfigurations, as verified by running on-line or off-line certification programs, or manual entries with the NAS operational program.	Par. 85c
Transfer of data between CCCH and the controller A and D positions.	Satisfactory transfer of data from the CCCH to the computer readout device as verified by running on-line or off-line certification programs or NAS TD messages. Satisfactory transfer of data from the computer entry device of the DSR as checked by NAS TD messages.	Par. 85d

MAXIMUM CERTIFICATION INTERVAL: 14 days

ALLOWABLE EXCEPTIONS: Individual console positions (R, D, or A), individual element processor (SAR−1, LIU−2, BRIDGE−3, or ESI−1).

PERSON RESPONSIBLE FOR CERTIFICATION: ATSS, with NAS Operations Manager (NOM) and/or NAS Area Specialist (NAS) support.

CERTIFICATION ENTRY IN FACILITY MAINTENANCE LOG:

Without Exception:
SDS RDED certified.

With Exception:
SDS RDED certified except (console position designation) (position number).
SDS RDED certified except (reconfigurable element processor designation).

Removing Exception:
SDS RDED (console position designation) (position number) certified.
SDS RDED (reconfigurable element processor designation) certified.

Section 17. DISPLAY SYSTEM REPLACEMENT (DSR) SYSTEM

Service	*Certification Parameter*	*Ref. Par. Stds & Tol/ Limits*
DSR Elements.	Satisfactory operation within the DSR system following satisfactory diagnostic testing below.	Par. 86
a. Primary Channel Processor (PCP) RISC/6000, Model 7018−770.	Successful completion of the Power On Self Test (POST) diagnostics.	Par. 86a(1)
Provides communication to all other DSR primary resources via four token-ring interfaces, also provides communication to the DCX via system Interface (SCSI) bus.	Successful acceptance of the processor into its assigned role at the M & C console.	Par. 86a(2)
b. Backup Channel Processor (BCP) RISC/6000, Model 7018−771.	Successful completion of the Power On Self Test (POST) diagnostics.	Par. 86b(1)
Provides a redundant processing path in the event of a primary path failure by providing an interface to EDARC via the Backup Communications Network (BCN) and EDARC System Interface (ESI).	Successful acceptance of the processor into its assigned role at the M & C console.	Par. 86b(2)
c. System Analysis Recording Processor (SAR) RISC/6000, Model 7018−771.	Successful completion of the Power On Self Test (POST) diagnostics.	Par. 86c(1)
Records system analysis data for individual processors on magnetic tape to permit off-line analysis.	Successful acceptance of the processor into its assigned role at the M & C console.	Par. 86c(2)
d. History Alert Log Processor (HAL) RISC/6000, Model 7018−771.	Successful completion of the Power On Self Test (POST) diagnostics.	Par. 86d(1)

Section 17. DISPLAY SYSTEM REPLACEMENT (DSR) SYSTEM (Continued)

Service	*Certification Parameter*	*Ref. Par. Stds & Tol/ Limits*
Retains a historical log of significant events and supports online queries and printed reports of the log.	Successful acceptance of the processor into its assigned role at the M & C console.	Par. 86d(2)
e. LCN Interface Unit Processor (LIU) RISC/6000, Model 7018−771.	Successful completion of the Power On Self Test (POST) diagnostics.	Par. 86e(1)
	Successful acceptance of the processor into its assigned role at the M & C console.	Par. 86e(2)
Provides a communication between HOST and distributed DSR resources such as the R, D, and A−position consoles.	MDM D7C51	Par. 86e(3)
f. EDARC System Interface Processor (ESI) RISC/6000, Model 7018−771.	Successful completion of the Power On Self Test (POST) diagnostics.	Par. 86f(1)
Provides communication and control functions necessary for interfacing the EDARC system via the backup communication network (BCN) to the DSR R-consoles.	Successful acceptance of the processor into its assigned role at the M & C console.	Par. 86f(2)
g. D/A Position Processor RISC/6000, Model 7018−771.	Successful completion of the Power On Self Test (POST) diagnostics.	Par. 86g(1)
Provides communication to all other DSR primary resources via four token-ring interfaces, also provides a graphical interface to support the D/A monitor.	Successful acceptance of the processor into its assigned role at the M & C console.	Par. 86g(2)
h. LCN Bridge Processor PS/2, Model 55 SX.	Successful completion of the Bridge verification diagnostics.	Par. 86h(1)

Section 17. DISPLAY SYSTEM REPLACEMENT (DSR) SYSTEM (Continued)

Service	*Certification Parameter*	*Ref. Par. Stds & Tol/ Limits*
Provides a data path and control of data flow between two separate token rings.	Successful acceptance of the Bridge into its role at the M & C console.	Par. 86h(2)
i. WARP System Interface Processor RISC/6000, Model 7018−771.	Successful completion of the Power On Self Test (POST) diagnostics.	Par. 86i(1)
Provides an interface to the Weather and Radar Processor (WARP) system to provide NEXRAD data to the HOST path of the R−position consoles.	Successful acceptance of the processor into its assigned role at the M & C console.	Par. 86i(2)

MAXIMUM CERTIFICATION INTERVAL: 120 days

ALLOWABLE EXCEPTIONS: Individual elements (PCP, BCP, HAL, SAR, BRIDGE) or individual sectors.

PERSON RESPONSIBLE FOR CERTIFICATION: ATSS, with NAS Operations Manager (NOM) and/or NAS Area Specialist (NAS) support.

CERTIFICATION ENTRY IN FACILITY MAINTENANCE LOG:

Without Exception:
SDS certified.

With Exception:
SDS certified except (element designation).
SDS certified except (designation) sector.

Removing Exception:
SDS (element designation) certified.
SDS (designation) sector certified.

APPENDIX 2. GLOSSARY OF TERMS AND ABBREVIATIONS

Access Time	1. The time it takes a computer to locate data or an instruction word in its storage section and transfer it to its arithmetic unit where the required computations are performed. 2. The time it takes to transfer information which has been operated on from the arithmetic unit to the location in storage where the information is to be stored.
Adaptation	Data stored in the operational computer program that describes the physical environment in which the program must operate. This data includes fixes, airways, input device identifiers, output routing, aircraft characteristics, and parameters.
Address	An identification represented by a name, label, or number, for a register or a location in storage. Addresses are also part of an instruction which specifies an operand number for the instruction.
Alphanumeric	A combination of alphabetic and numeric characters.
Alphanumeric Keypack	A device consisting of a compact grouping of keys used by the radar controller to enter various items of data into the computer.
Analog	The presentation of numerical quantities by means of physical variables; e.g., translation, rotation, voltage, or resistance (contrasted with digital).
Attention Bars	Bars, presented ABOVE the data block, to draw the controllers attention to required action for the aircraft.
Backup Channel Processor (BCP)	Provides a redundant processing path in the event of a primary path failure by providing an interface to EDARC via the Backup Communications Network (BCN) and EDARC System Interface (ESI).
Backup Communications Network (BCN)	An IEEE 802.3 network that connects the EDARC System Interface (ESI) to a DSR console and connects backup radar gateways to other consoles. The BCN path provides sufficient data transmissions for continuance of air traffic control in the event of local communications network (LCN) failure or loss of interface to the Host system.
Beacon Altitude	Mode C derived beacon altitude.
Binary System	As applied to mathematics, a number system having “2” as its base using only the digits zero and one.
Blip/Scan Ratio	The ratio between the number of times a target is displayed as against the number of times it should have been displayed.
Bridge	A processor connected to two rings simultaneously by way of an adapter at each ring. It allows the transfer of information from one ring to the other. Rings joined together by bridges form multiple ring networks.
Buffer	An internal portion of a data processing system serving as intermediary storage between two storage or data-handling systems with different access times or formats; usually to connect an input or output device with the main or internal high-speed storage.
Byte	A sequence of adjacent binary digits operated upon as a unit

and usually shorter than a word. In the IBM 9020 an 8-bit field (exclusive of parity) is used.

Capacity — The maximum number of digits that can be handled or processed by a computer unit; also, the upper and lower limits of the numbers which can be handled by the computer.

Card Input — A method of introducing information into a computer by means of punch cards.

Categories — Radar controller input actions grouped under fairly broad headings, such as: tracking, radar handoff, etc.

Category/ Function Panel — A panel to enable the controller to indicate to the computer, by push-button selection, the particular action requested in conjunction with an alphanumeric message entry.

Central Computer Complex Host (CCCH) — The physical components of the 3083 IBM computer and its associated peripheral equipment.

Character — 1. One symbol of a set of elementary symbols such as those corresponding to the keys on a typewriter. The symbols usually include the decimal digits 0 through 9, the letters A through Z, punctuation marks, operation symbols, and any other single symbols which a computer may read, store, or write.

2. The electrical, magnetic, or mechanical profile used to represent a character in a computer, or its various storage and peripheral devices. A character may be represented by a group of other elementary marks, such as bits or pulses.

Chart Flow — A graphic representation of the major steps to work in process.

Clear — To restore a storage or memory device to a prescribed state, usually denoting zero or blank.

Clock Time — A 4-digit number specifying Greenwich mean time in hours and minutes. Leading zeros are required for input to the computer.

Clutter Density Outlines — Lines on the plan view display outlining weather or clutter areas.

Common Digitizer (CD) — A device that converts analog radar and beacon returns, at the radar site, into a digitized form that is transmitted via landlines for use by the central computer complex.

Computer Entry Device — A keyboard, similar to a typewriter, installed at “D” and “A” controller positions and used to enter messages into the computer for processing.

Computer Identification Number — A 3-digit numerical code, automatically assigned by the computer, that can be used to identify flight information to the computer. Each aircraft will have an individual computer identification number.

Computer Program — A plan or routine for solving a problem on a computer, as contrasted with such terms as fiscal program, military program, and development program.

Controlled Visual Rules — Visual controlled flight in which separation from other aircraft is provided by air traffic control. Controlled visual rules is restricted to positive control airspace.

Coordinates, Display — Coordinates covering a particular plan view display’s geographical area.

Coordinates, System — Coordinates covering a position within the geographical area of a facility.

Coordinates, X, Y — Geometric notations used to define the position of a point.

Correlation	The relative association of two sets of data; e.g., positional agreement between radar data and the computer-predicted track position.
D-Time	Departure time.
Data Block	The symbology displayed adjacent to a tracked aircraft target, containing aircraft position symbols, leader, velocity vector, and the alphanumeric data associated with the aircraft e.g., aircraft identification, assigned altitude, Mode C altitude, computer number, beacon code, attention bars, and special condition indicators.
Data Link	Electronic equipment for automatic transmission of information in digital form.
Data Reduction Program	A program designed to reduce master operational recording tape data for analysis and evaluation.
Debug	The process of isolating and removing malfunctions from a computer or mistakes from a routine.
Departure List	A controller-located list of departing aircraft presented on the plan view display in tabular form.
Device, Input	A unit designed to bring data to be processed into a computer; e.g., a card reader, a tape reader, or a keypack.
Device, Output	A unit that translates electrical impulses representing data processed by the computer into dynamic displays or permanent results such as printer forms, punched cards, and magnetic writing on tape.
Disk Storage	A storage area on the surface of a large disk coated with a thin deposit of magnetic material.
Digitize	To convert an analog measurement of a physical variable into a numerical value, thereby expressing the quantity in digital form.
Display	A presentation of information such as a projection on a screen, generation on a cathode ray tube, or a printout.
Display Management	To inhibit/select data for display.
EDARC System Interface Processor (ESI)	Provides communication and control functions necessary for interfacing the EDARC system via the backup communication network (BCN) to the DSR R-consoles.
Elements	A term used for equipment in a computer system, for example, a computer element, a storage element, an input/output element, etc.
Engineering Model	The NAS Stage A computer system installed at the Federal Aviation Administration Technical Center for evaluation and experimentation.
Entry Key	A key located on keypack and keyboards used to enter messages into the computer.
Equipment, Peripheral	The auxiliary machines which may be placed under the control of the central computer. Examples of this are card readers, card punches, magnetic tape feeds, and high speed printers. Peripheral equipment may be used online or offline depending upon computer design, job requirements, and economics.
Erase	As concerns a computer, to replace all the binary digits in a storage device by binary zeros.
Executive Control	A program written to regulate the various programs within a system.
External Storage	Computer storage away from the computer itself but in a form usable in the computer; such

as magnetic tapes, magnetic wire, punched cards, etc.

Fail Safe — A procedure whereby redundant elements of each type equipment are installed at a facility to allow uninterrupted service whenever a single element fails.

Fail Soft — The concept of providing a limited system functional capability following a system failure, even though the minimum set of computer elements required for reconfiguration is not available.

Fast-Time Operation — Processing data as fast as the computer program is able to accept the inputs and make outputs without regard to the passage of real time.

Fields — Areas within a data block or input message where the different data is contained.

Flight Plan Aided Tracking — The computer use of flight plan and flight progress data to assist the tracking of aircraft.

Flight Plan Position — Position based on the field flight plan.

Forced Display — Information automatically projected by a computer on a display, on the basis of programmed priorities.

Format — An arrangement of information on a form or in storage.

Fruit — Nonsynchronous beacon replies initiated by interrogations of other radar beacon interrogators.

Functions (Category) — Specified radar controller input actions within a category.

Garbage — Unpredictable numerical results, usually resulting either from machine switch-on, machine malfunction, or machine misuse.

Hard Copy — Printed outputs, as opposed to displays and magnetic tape outputs.

Hardware — The mechanical, magnetic, electrical, and electronic devices from which a computer is constructed (equipment).

History Alert Log Processor (HAL) — Retains a historical log of significant events and supports online queries and printed reports of the log.

Hold List — A controller-located list of holding aircraft presented on the plan view display in tabular form.

IBM 9020 — A computer designed by IBM for the automation of air traffic control facilities, using three central processing units of IBM's System 360, Models 50 and 65 Computers.

IBM System 360 — A group of IBM digital computers, of various sizes, using a common language.

Inbound List — A controller-located list of inbound aircraft presented on the plan view display in tabular form.

Inhibit — Controller or machine action to suppress the presentation of certain data.

Initiation — The process by which a controller or a computer associates speed and heading with radar data to form a track.

Input/Output Typewriter — A device used to enter information or to receive information as the result of computer processing.

Instruction — A machine word or a set of characters in machine language directing the computer to take a certain action.

Interface — The common boundary of two bodies or spaces. The functional intersystem relationships which influence system accomplishments.

Keyboard	See computer entry device.
keypack	See alphanumeric keypack.
Leader	A straight line connecting the track symbol and the alphanumeric data.
Leading Zeros	Zeros placed ahead of positive integers for parity. In the number 0200 the zero preceding the 2 is a leading zero.
Lists	Aircraft data presented in tabular form on the plan view display.
Local Communications Network (LCN)	The network that provides communication paths among subsystems. Token rings are organized into access rings that interconnect subsets of DSR and backbone rings that interconnect the access rings. More than one ring is used at all levels to subdivide a transmission workload and to provide redundancy for high availability operations.
Local Communications Network Interface Unit (LIU)	An IBM RISC System/6000 processor that interfaces Host processors to LCNs, and central processors to LCNs and BCNs.
Mapping	The blanking out of unwanted returns such as clutter. Aircraft targets, when they are displayed, may appear at a reduced intensity in this area.
Matched Track	A track that is paired to its proper flight plan route segment.
Memory/Storage	The units that store information and from which information can be extracted at a later time.
Message	A group of words transported as a unit.
Mode 2	(Military only)
Mode 3/A	Transponder response for identification and tracking.
Mode C	Transponder response for automatic pressure altitude transmission.
Mode 4	A special military beacon code.
Modem	Modulating and demodulating (communication equipment).
Modularity	The structural or functional partitioning of systems with a view towards operational independence of the resulting modules.
Multiplexing	A process by which different items of information can be transmitted simultaneously in the same direction on a single circuit.
Multiprocessing	In computer terminology, the physically independent and simultaneous processing accomplished by the use of multiple processing and input/output units.
Multiprogramming	In computer terminology, a technique for handling numerous routines or programs simultaneously by overlapping or interleaving their execution.
National Airspace System	The common system of facilities, equipment, regulations, procedures, and personnel required for the safe and efficient movement of civil and military aircraft in airspace within the jurisdiction of the United States.
Non-Volatile Storage	Computer storage such as magnetic tape, punch cards, etc., that retains information placed on it even in the absence of electric or electronic power.
Offline	In computer language, pertaining to auxiliary equipment or output devices not under control of the central processing unit.
Online	In computer language, pertaining to operation of devices under direct control of the computer.
Operational Equipment	Equipment that is in actual use for air traffic control.
Output Equipment	The equipment used to transfer information out of a computer.

Output Printer	A device that prints computer message or displays in hardcopy form.
Overflow (Over Capacity)	The generation of a quantity beyond the capacity of the register or location which is to receive the result.
Parameter	A computer program constant or an equipment adjustment which is set to a value within a limited range with fixed increments.
Parity Check	A check that tests whether the number of ones (or zeros) in an array of binary digits is odd or even.
Plan View Display	Radar position console.
Position Marker	A dot on the plan view display, moved in association with the trackball.
Positional Entry Device	Trackball unit.
Preferred Coverage	The radar-designated preferential coverage over a particular geographical area where coverage from two or more radars is available.
Preview Area	An area on a display used to verify message data prior to its entry into the display processor.
Previously-Selected Aircraft	The last designated aircraft identification that was included in a previous message to the computer.
Primary Channel Processor (PCP)	Provides communication to all other DSR primary resources via four token-ring interfaces, also provides communication to the DCX via system Interface (SCSI) bus.
Prime Function	The first function within a category. The prime function is selected automatically, by the computer, if no function button is depressed on the category/function panel.
Print	To transfer computer information to a output device; to copy from internal storage to external storage.
Print, High Speed	A peripheral output device which operates at a speed of 600 lines per minute, 132 characters per line.
Programming	The act of planning, coding, and debugging a computer program.
Pulse, X–	Special military use.
Punch Card	A card of standard size and shape upon which data is stored in the form of holes and no holes. The hole positions are arranged in columns, a given pattern of holes in a column represents one character.
Quantize	To restrict the possible values of a variable to a discrete number of values.
Quantizer	A device that decides in what particular digital subdivision a given analog quantity should be placed.
Readout	Output from the computer on a computer readout device, flight strip printer, input/output typewriter.
Real-Time Operation	Processing data in synchronism with a physical process in such a fashion that the results of the data processing are useful to the physical operation and relate to the passage of real time.
Reconfiguration	The procedure, either manual or program directed, whereby an element is replaced by a spare to continue full operation.
Routine, Diagnostic	A routine used to locate a malfunction in a computer, or to aid in locating mistakes in a computer program, in general, any routine specifically designed to aid in debugging or troubleshooting.

Safe Stored Data	Data stored in such a manner that a power failure will not cause the stored data to be lost; non-volatile message.
Simulation	A process of using synthetic information in a system for training, evaluation, and testing purposes.
Smoothing	Procedures that decrease or eliminate rapid fluctuations in data. Used by the computer tracking program in determining the future position of an aircraft.
Software	In computer terminology, all the programming systems required for effective data processing operations.
Sort Box	An area around a radar return display. Used to eliminate from correlation consideration all tracks whose positions are outside the sort box limits.
Stage A	The first stage of NAS en route implementation. NAS Stage A will contain the automated flight and radar data processing features of the most immediate concern to air traffic control.
Stored Program Computer	A computer that can alter its own instructions in storage as through they were data and subsequently execute the altered instructions.
Strobe	An area in which electronic jamming has affected target detection.
Sublist	A departure, inbound, or hold list divided by its appropriate fix.
Subsystem	An essential, functional part of a system which supports a data processing operation.
Supplementary Coverage	Radar having overlap coverage over a particular area, but not classified as preferred coverage.
System Support Facility	The engineering model computer installation and overhead facility located at the FAA Technical Center.
Tabular Data	Data presented in list displays and on a computer readout device.
Target History	A display of stored past and present positions of an aircraft target.
Target Position Symbols	Symbols presented on the plan view display representing the actual aircraft position and indicating the target status.
Tracking	Radar target identification; positional agreement of a radar target and the computer-predicted position; computation of the difference between the predicted position and the actual position of the radar target.
Track Initiation (Automatic)	Tracking started as the result of a received discrete beacon code matching an assigned beacon code in computer storage.
Track Initiation (Manual)	Tracking started as the result of a controller action and identifying the radar data to the computer.
Trackball Unit	Includes a trackball mounted in the radar bright display equipment console and a trackball position marker on the plan view display. Manipulation of the trackball moves the marker on the display.
Update	To bring data into agreement with the most recent information available.
Velocity Vector	A straight line emanating from the track symbol indicating the anticipated path of tracked aircraft in terms of flying time.
WARP System Interface	Provides an interface to the Weather and Radar Processor (WARP) system to provide NEXRAD data to the HOST path of the R–position console.

ABBREVIATIONS

A

A	Ampere
ACC	FAA's Aeronautical Center
AAT	FAA's Air Traffic Service
ABC	Assigned Beacon Code
A/C	Aircraft
ac	Alternating Current
ACE	Automatic Clutter Eliminator
ACP	Azimuth Change Pulse
ADA	Azimuth Division Area
ADC	Air Defense Center
ADI	Add/Delete Indicator
ADP	Automatic Data Processing
ADTAC	Air Defense Tactical Air Command
AF	Airway Facility
AFC	Automatic Frequency Control
AFS	Airway Facilities Sector
AGL	Above Ground Level
Ah	Ampere Hour
AIMS	ATC Beacon Interrogation Identification System
ALTS	Altitude
a.m.	Before Noon
AMCC	ACF Maintenance Control Center
AMIC	Area Manager In Charge
A/N	Alphanumerics
APG	Azimuth Pulse Generator
APM	Program Engineering and Maintenance Service
APSA	Alternate Preferential Storage Areas
ARM	Antenna Rotation Monitor
ARP	Azimuth Reference Pulse
ARSR	Air Route Surveillance Radar
ARTCC	Air Route Traffic Control Center
ARTG	Azimuth, Range and Timing Group
ARTS	Automated Radar Terminal System
ASCII	American Standard Code for Information Interchange
ASDE	Airport Surface Detection Equipment
ASF	Airport Support Facility
ASR	Airport Surveillance Radar
AT	Air Traffic
ATAC	Air Traffic Assistant Chief
ATC	Air Traffic Control (Controller)
ATCC	Air Traffic Control Computer
ATCBI	Air Traffic Control Beacon Interrogator
ATCRBS	Air Traffic Control Radar Beacon System
ATCS	Air Traffic Control Specialist
ATCT	Air Traffic Control Tower
ATR	Address Translator Register
ATSS	Airway Transportation System Specialist
ATTD	Audio Taped Time Display
ATWS	Air Traffic Watch Supervisor
AU	Adapter Unit

AWG	American Wire Gauge
AZ	Azimuth

B

b	Bit
BAL	Basic Assembly Language
BAN	Beacon Alphanumerics
BAT	Basic Assurance Test
BATT	Battery
BBU	Battery Backup Unit
BCD	Binary Coded Decimal
BCN	Backup Communications Network
BCP	Backup Channel Processor
BDAS	Beacon Data Acquisition System
BFTA	Beacon False Target Analysis
BINS	Sort Bin Storage Table
BIOCH	Byte Input/Output Channel
BIST	Built-in Self Test
Bldg	Building
BM	Buffer Memory
BMU	Buffer Memory Unit
BOT	Beginning-of-Tape
bps	Bits Per Second
BRG	Beacon Reply Group
BPI	Bits Per Inch
BRPO	Beacon Registration Printout
BSM	Basic Storage Module
BUEC	Backup Emergency Communications

C

CAOS	Configuration Analysis Orders Table
CAS	Collision Avoidance System
CB	Circuit Breaker
CC	Configuration Console
CCA	Channel-to-Channel Adapter
CCCH	Central Computer Complex Host
CCD	Configuration Control Decision
CCM	Configuration Control Monitor
CCU	Central Control Unit
CCW	Channel Command Word
CD	Common Digitizer
CDA	Channel Device Address
CDC	Computer Display Channel
CDE	Computer Display Equipment
CDM	Computer Display Module
CDR	Card Data Recorder
CDU	Coolant Distribution Unit
CE	Compute Element
CED	Computer Entry Device
CET	Computer Entry Tester
CENRAP	Center Radar ARTS Presentation
CFAD	Composite Flight Data Processing
CFU	Control and Format Unit
ch	Chapter
CID	Computer Identification
CLD	Compute Logic Design
CLU	Common Logic Unit
CMA	Centralized Memory Access
CODE	Controller Decision Evaluation
col.	Column
COMDIG	Common Digitizer Data Reduction Program

con.	Continued
CP	Central Processor
CPFS	Computer Program Functional Specification
CPI	Central Processor Interface
CPM	Control Processor Monitor
CPS	Characters Per Second
CPU	Central Processing Unit
CPU/CLU	Central Processing Unit/Common Logic Unit
CRAD	Composite Radar Data Processing
CRAT	Configuration Requirement Availability Table
CRD	Computer Readout Device
CRP	Card Reader/Punch
CRT	Cathode-Ray Tube
CST	Channel Status Table
CSW	Channel Status Word
c.t.	Central Time
CTCA	Channel-to-Channel Adapter
CTDS	Compool Table Design Specification
CTS	Coded Time Source
CU	Control Unit
CUE	Computer Update Equipment
CVR	Controlled Visual Rules
CVG	Character Vector Generator
CVT	Communication Vector Table
CWSU	Central Weather Service Unit

D

DABS	Discrete Address Beacon System
DAIR	Direct Altitude and Identification Readout
DARC	Direct Access Radar Channel
DART	Data Analysis and Reduction Tool
DAS	Digital Access System
DASF	Direct Access Storage Facility
DAU	Data Adapter Unit
dB	Decibel
DBC	Discrete Beacon Code
dBm	Decibels Above 1 Milliwatt
DBM	Data Base Maintenance
dBrnc	Decibels Above the Relative Noise C–Weighted Channel
dc	Direct Current
DC	Display Channel
DCC	Display Channel Complex
DCCMNT	Display Channel Complex Maintenance
DCCR	Display Channel Complex Rehost
DCD	Digital Clock Display
DCP	Display Channel Processor
DCU	Disk Control Unit
DCUP	Display Console Unit Processor
DCVG	Display Character/Vector Generator
DD	Display Drives
DE	Display Element
DEC	Data Entry Control
DED	Data Entry Device
DEDS	Data Entry and Display Subsystem
DEFCON	Defense Preparedness Condition
DEK	Direct Entry Keyboard
DFG	Data Filter Group
DG	Display Generator

DGIO	Display Generator Input/Output
DGU	Display Generator Unit
DI/O	Direct Input/Output
DMB	Dynamic Memory Board
DME	Distance Measuring Equipment
DMG	Display Monitor Group
DMSS	Display Mode Select and Status
DOD	Department of Defense
DP	Display Processor
DPSS	Data Processing Subsystem
DR&A	Data Reduction and Analysis
DRAD	DARC Radar Data Processing
DRE	Data Receiving Equipment
DSC	Data System Coordinator
DSD	Digital Sequence Detector
DSE	Data Server Element
DSF	Digital Simulation Facility
DSR	Display System Replacement
DSU	Disk Storage Unit
DTE	Digital Target Extractor
DTG	Data Transmission Group
DTTG	Digitizer Test Target Generator
DYSIM	Dynamic Simulation

E

EAIR	Extended Area Instrumentation Radar
EBCIC	Extended Binary Coded Decimal Interchange Code
EC	Engineering Change
ECB	Event Control Byte
ECT	Error Collection Table
EDARC	Enhanced Direct Access Radar Channel
EDSU	Error Detection and Switchover Unit
EEM	Electronic Equipment Modification
EOD	End-of-Display
EOF	End-of-File
EOM	End-of-Message
EOR	End-of-Record
EOT	End-of-Tape
EREP	Environmental Record Editing and Printing
ERSIC	Expanded Refresh Subsystem Interface Controller
ESI	EDARC System Interface
ETG	Enhanced Target Generator

F

FAA	Federal Aviation Administration
FCB	Facility Control Block
FDB	Full Data Block
FDDI	Fiber-Distributed Data Interface
FDDS	Flight Data Distribution System
FDED	Flight Data Entry and Display
FDEP	Flight Data Entry Printout
FDIO	Flight Data Input Output
FDP	Flight Data Processing
FDT	Flight Data Table
FEMM	Field Engineering Maintenance Manual
FIDO	Flight Inspection District Office
FLAT	Flight Plan Aided Tracking
FLID	Flight-Plan Identification

FLOP	Functional Lapse Of Operational Processing
FLT	Fault Location Test
FPA	Fix Posting Area
FPR	Floating Point Register
FSP	Flight Strip Printer
FSS	Flight Service Station

G

GCB	Gated Converter Buffer
G.c.t.	Greenwich Civil Time
GMLSDA	Geographical Map Line Segment Delete Add Record
GPI	General Purpose Input
GPO	General Purpose Output
GPR	General Purpose Register

H

h	Hour
HAL	History Alert Log
HDA	Head Disk Assembly
HDR	Hardware Discrepancy Report
hf	High Frequency
HID	Host Interface Device
HI/O	Halt Input/Output
HMC	Hardware Management Console
HSF	High-Speed Filter
HSP	High-Speed Printer
HV	High Voltage
HVPS	High Voltage Power Supply
Hz	Hertz (cycles per second)

I

IBR	Input Buffer Register
IC	Instruction Counter
ICB	Interface Control Block
ICD	Interface Control Document
ICRS	Input Control Sequences
ICU	Integrated Control Unit
IDS	Input Data Selector
IFD	Interfacility Data
IFDC	Interfacility Data Control
IFDS	Interfacility Data Set
ILS	Instrument Landing System
IM	Inner Marker
in	Inch
INV	Invalid Message Label
I/O	Input/Output
IOA	I/O Adapter
IOC	Input/Output Control
IOCB	Input/Output Control Block
IOCE	Input/Output Control Element
IOCT	Input/Output Control Table
IOP	Input/Output Processor
IOS	Input/Output Supervisor
IOT	Input/Output Typewriter
IPL	Initial Program Load
IPM	Independent Position Measuring System
ISPF	Interactive System Productivity Facility

J

JRPG	Joint Radar Planning Group

JOVIAL	Jules' Own Version of International Algorithmic Language

K

k	Kilo (prefix 1,000)
ke	Kilocycle
KCNF	Hardware Configurations Status Control
kHz	Kilohertz
km	Kilometer
kV	Kilovolt
kVA	Kilovoltampere
KVDT	Keyboard Video Display Terminal
kW	Kilowatt
kWh	Kilowatthour

L

LAN	Local Area Network
LCN	Local Communications Network
LDB	Limited Data Block
LDDA	Logical Disk Device Address
LDN	Logical Device Number
LED	Light Emitting Diode
LEPP	Live Environment Performance Program
lf	Low Frequency
LIU	LCN Interface Unit
LM	Load Module
LOC	Localizer
LORAN	Long Range Navigation
LP	Line Printer
LPSW	Load Program Status Word
LRC	Longitudinal Redundance Check
LRCT	Legal Recording Control Table
LRR	Long Range Radar
LRU	Lowest Replaceable Unit
LSB	Least Significant Bit
LSU	Line Switching Unit
LVPS	Low Voltage Power Supply

M

M	Mega (prefix 1 million)
m	Milli (prefix 1 thousandth)
MACH	Maintenance and Channel
MAD	Maintenance Alert Directive
M&C	Monitor and Control
M&D	Maintenance and Diagnostic
MAL	Malfunction
MBR	Memory Buffer Register
M/C	Marginal Check
MCCU	Multi-System Channel Communication Units
MCT	Master Configuration Table
MCU	Modulator Control Unit
MDM	Multiprogramming Diagnostic Monitor
MDS	Minimum Discernible Signal
MDT	Mean Down Time
mF	Millifarad
µF	Microfarad
MHz	Megahertz
MIDS	Modified Input Data Selector
MIM	Maintenance Information Manual
min	Minute
MIPS	Million Instructions Per Second

MLM	Maintenance Library Manual
MLS	Microwave Landing System
MM	Middle Marker
mm	Millimeter
MR	Map Request
M/RA	Maintenance/Reliability Analysis
MRDP	Multiple Radar Data Processing
MRP	Memory Reference Pulse
µs	Microsecond (mu and lower case s)
ms	Millisecond (lower case letters (ms))
MS	Modem Splitter
MSB	Most Significant Bit
MSG	Message
MSP	Maintenance Systems Printer
MSP	Medium-Speed Printer
MSU	Modem Splitter Unit
MTBF	Mean Time Between Failures
MTD	Moving Target Detector
MTI	Moving Target Indicator
MTS	Memory Test Station
MTTF	Mean Time to Failure
MTU	Magnetic Tape Unit
MUT	Mean Up Time
M Ω	Megohm
mV	Millivolt

N

NAPRS	National Airspace Performance Reporting System
NAS	National Airspace System
NAS	NAS Area Specialist
NASCOM	Daily NAS Status Report
NAS–MD	NAS Configuration Management Document
Navaid	Air Navigation Facility
NCP	NAS Change Proposal
NFDC	National Flight Data Center
NML	Normal
nmi	Nautical Mile
NOM	NAS Operations Manager
NOP	No Operation
NOSS	Non-Operational Support System
NOTAM	Notice to Airmen
NRC	Nonradar Channel
NRCC	Nonradar Console Channel
NRCED	Nonradar Computer Entry Device
NRCRD	Nonradar Computer Readout Display
NRKM	Nonradar Keyboard Multiplexer
NRZI	Non-Return to Zero Invert
ns	Nanosecond (lower case letters (ns))
NSCT	NAS Certification Tape
NSU	Nonstartup

O

OBS	On Battery Signal
OC	Operation Changeover
OEAP	Operational Error Analysis Program
OLC	Online Certification
OLCT	Online Certification Tape
OLM	Offline Maintenance
OLSP	Online Site Parameter
OLTS	Online Tests

OM	Outer Marker
OMIB	Output Message Interface Block
OMSS	Operational and Maintenance Support Station
ORR	Online Radar Recording
ORRE	Online Radar Recording and Edit
OS	Operating System
OVL	Overlap
OV/OC	Overvoltage/Overcurrent

P

p.,pp.	Page, Pages
PAMRI	Peripheral Adapter Module Replacement Item
par.	Paragraph
PC	Processor Controller
PCB	Printed Circuit Board
PCBT	Printed Circuit Board Tester
PCM	Processor Controller Maintenance
PCU	Printer Control Unit
PCW	Page Control Word
PCP	Primary Channel Processor
Pd	Probability of Detection
PE	Permanent Echo
PEAS	Positional Error Analysis Summary
PECO	Program Equipment Checkout
PEVP	Permanent Echo Verification Printout
pF	Picofarad
PGM	Power Unit Installation/Maintenance
PIREP	Pilot Report
PM	Preventive Maintenance
p.m.	Afternoon
PMG	Performance Monitor Group
POST	Power On Self Test
PPI	Plan Position Indicator
PRC	Paragraph Control Word
PRM	Processor Unit Introduction/Maintenance Manual
PS	Power Supply
PSA	Preferential Storage Area
PSW	Program Status Word
PU	Power Unit
PVC	Polyvinyl Chloride
PVD	Plan View Display

Q

QA	Quick Action
QAK	Quick-Action Key
QAP	Quick-Action Panel
QARS	Quick Analysis of Radar Sites

R

RA	Registration Analysis
RANK	Replaceable Alphanumeric Keyboard
RAPPI	Random Access Plan Position Indicator
RRAPPI	Remote Random Access Plan Position Indicator
RARRE	Range Azimuth Radar Reinforced Evaluator
RC	Radar Channel
RCAG	Remote Control Air/Ground
RCC	Radar Console Channel
RCON	Reconfiguration Command Display Channel

RCRD	Radar Computer Readout Display
RCU	Remote Control Unit
RDA	Radar Data Adapters
RDAD	Registration Data Azimuth Deviation
RDAT	Radar Data Acquisition and Transfer
RDC	Radar Data Controller
RDDU	Radar Data Distribution Unit
RDED	Radar Data Entry and Display
RDP	Radar Data Processing
RDRD	Registration Data Range Deviation
RDS	Radar Display Subsystem
RDSS	Radar Display Subsystem
R/FDED	Radar and Flight Data Entry and Display
RIA	Radar Interface Adapter
RIOT	Replacement Input/Output Terminal
RKM	Radar Keyboard Multiplexer
RM	Refresh Memory
RMC	Refresh Memory Control
RMDC	Refresh Memory Data Control
RMIOC	Refresh Memory Input/Output Control
RML	Remote Microwave Link
RMU	Refresh Memory Unit
RMUX	Radar Multiplexer
ROC	Refresh Output Controller
ROS	Read Only Storage
RQG	Radar Quantizer Group
RSB	Radar Sort Box
RSCANS	Radar Statistical Coverage Analysis System
RSQ	Radar Sort Queue
RSST	Refresh Subsystem Test
RTC	Real-Time Clock
RTQC	Real-Time Quality Control
RTR	Remote Transmitter Receiver
RU	Reconfiguration Unit
RVR	Runway Visual Range

S

s	Second
SAFI	Semiautomatic Flight Inspection Aircraft
SAR	System Analysis Recording
SAFT	System Analysis File Tape
SC	System Console
SCCU	System Console Control Unit
SCI	Selector Channel Interface
SCON	Set Configuration Control Register
SCOPE	System Checkout of Peripheral Equipment
SCU	Storage Control Unit
SDL	Subprogram Design Logic
SDM	Subsystem Diagnostic Monitor
SDR	Storage Data Register
SDS	Surveillance Display System
SE	Storage Element
sec.	Section
SETA	Set Available Message
SETU	Set Unavailable Message
SEVA	System Evaluation
SHMOO	Operational Limits Check Routine
SIM	Simulator
SINE	System Integration of NAS Equipment

SIO	Start Input/Output
SIS	Surveillance Interrogation System
SITE	Site Parameter Record Table
SLCA	Slant Range Correction Altitude
SMP	System Maintenance Processor
SMS	Standard Modular System
SOD	Start-of-Display
SOF	Start-of-File
SOM	Start-of-Message
SOST	Site Operational System Test
SP	Storage Protect
SPAR	Storage Protect Address Register
SPB	Site Program Bulletin
SPR	Site Parameter Record
SPS	Surveillance Processing System
SPS	System Performance Specialist
SRS	Surveillance Radar System
SSC	System Status and Control
SS	System Specialist
SSF	System Support Facility
SSK	Set Storage Key
SSP	System Status Panel
SSR	Secondary Surveillance Radar
SST	Surveillance System Testing
SSU	Storage Switch Unit
ST	Simulation Training
STB	Site Technical Bulletin
subsec.	SubSection
subpar.	SubParagraph
SU/SO	Startup/Startover
SVC	Supervisor Call

T

TAARS	Target Analyzer for Adapting Radar Boxes
TACAN	UHF Tactical Air Navigational Aid
TAP	Top Address Pointer
TAR	Timing Analysis Record
TARE	Timing Analysis Record Error
TATF	Terminal Automatic Test Facility
T/B	Trackball
TC	Test Chart
TCA	Terminal Control Area
TCU	Tape Control Unit
TD	Tape Drive
TDY	Temporary Duty
TEC	Test Equipment Console
TELCO	Telephone Company
TI	Technical Issuance
TIO	Test Input/Output
TIPP	Test Input Preparation Program
TIPS	Terminal Information Processing System
TMU	Traffic Management Unit
T.O.	Technical Order
TR	Technical Representative
TRACON	Terminal Radar Approach Control Facility
TROS	Transformer Read Only Storage
TSB	Track Sort Box
TSTP	Test Pattern
TTY	Teletypewriter
TV	Television

U

UCS	Universal Character Set
UDS	Universal Data Set
UIC	Unit Interface Control
UM	Users Manual
UNTE	Operational System Tape Edit
UPC	Universal Processor Controller
UPS	Uninterruptible Power Source
USAF	United States Air Force
UTM	Unsuccessful Transmission Message

V

V	Volts
V ac	Volts Alternating Current
V dc	Volts Direct Current
VF	Voice Frequency
VFR	Visual Flight Rules
VME	Virtual Memory Editor
vol.	Volume
VOR	Very High Frequency Omnidirectional Radio Range
VPP	Verification Post Processor Program
VRS	Voice Response System

W

W	watt
WARP	Weather and Radar Processor
WBCW	Write Buffer Control Word
WDT	Watchdog Timer
WMSU	Weather Message Switching Unit
Wh	Watthour
WOG	Weather Outline Generator
WPM	Words Per Minute
WX	Weather

APPENDIX 3. MAINTENANCE OPERATION MANUALS

Information supplied by the system integration of NAS equipment (SINE) contractor has been consolidated into FAA Maintenance Operational Manuals. These manuals are maintained current by Operational Support (AOS) through the electronic equipment modification (EEM) page change process, and site program bulletins (SPB).

Maintenance Operations Manuals

FAA–4070, Common Users Manual

FAA–4002, System Checkout of Peripheral Equipment (SCOPE 2)

FAA–4010, Input/Output Typewriter Subsystem Operating Manuals (Maintenance)

FAA–4011, Flight Data Entry and Printout Subsystem Operating Manuals (Maintenance)

FAA–4012, Flight Strip Printer Subsystem Operating Manuals (Maintenance)

FAA–4013, Coded Time Source Subsystem Operating Manuals (Maintenance)

FAA–4014, Teletypewriter Subsystem Operating Manual (Maintenance)

FAA–4015, Interfacility Equipment Subsystem Operating Manuals (Test and Maintenance)

FAA–4003, Computer Display Channel (Radar Channel) Subsystem Operating Manuals (Maintenance)

FAA–4006, Common Digitizer Subsystem Operating Manuals (Maintenance)

FAA–4018, System Maintenance Monitor Console Subsystem Operating Manuals (Test and Maintenance)

FAA–4032, Medium Speed Printer Subsystem Operating Manuals (Maintenance)

FAA–4025, Display Channel Complex Subsystem (Radar Keyboard Multiplexer) Operating Manuals

FAA–4026, Display Channel Complex Plan View Display Subsystem Operating Manuals

FAA–4028, Display Channel Complex Subsystem Maintenance Program Operating Manuals

FAA–4306N, NAS En Route Stage A User's Manual Quick Analysis of Radar Sites (QARS) Program

FAA–4306X, NAS En Route Stage A User's Manual Online Radar Record Edit (ORRE) Program

TI Documents

TI 6160.2 Equipped Instruction Book, Direct Access Radar Channel (Enhanced DARC) System Status

TI 6160.3 Equipment Instruction Book, Direct Access Radar Channel (Enhanced DARC) Control Processor

TI 6160.4 Instruction Book, Direct Access Radar Channel (Enhanced DARC) Display Processor, Single and Display Processor, Dual

TI 6160.5A Equipment Instruction Book, Direct Access Radar Channel (Enhanced DARC) Printed Circuit Board Tester

TI 6160.6 System Instruction Book, Direct Access Radar Channel (Enhanced DARC)

TI 6160.14 Software Instruction Book, Direct Access Radar Channel (Enhanced DARC) Maintenance and Diagnostic Program and User's Manual

TI 6160.16 Instruction Book, Direct Access Radar Channel (DARC) Cabinet Power Supplies

TI 6160.17 Instruction Book, Direct Access Radar Channel (DARC) Disk Drive and Power Supply

TI 6160.23 Equipment Instruction Book, Direct Access Radar Channel (DARC) Core Memory

TI 6160.35 Equipment Instruction Book (DARC) Magnetic Tape Unit (MTU) Cabinet

TI 6160.39 Equipment Instruction Book (DARC) Expanded Disk Drive System

TI 6160.40 User's Manual (DARC) Line Printer and Input/Output Typewriter

TI 6160.41 Display Channel Complex Rehost Maintenance Manual, Display Controller

TI 6160.42 Display Channel Complex Rehost Maintenance Manual, Switch

TI 6160.43 Equipment Instruction Book (DARC) Model T480/T490 Tape Drive

TI 6160.44 Display Channel Complex Rehost Systems Operations and Maintenance Manual

TI 6160.62 Equipment Instruction Book (DARC) Weather Message Switching Unit (WMSU)

TI 6130.6 Hardware Design Data (HD) Instruction Book, Flight Data Input/Output (FDIO) System

TI 6160.45 DSR/DSSC Hardware Support Equipment User's Manual (HSEM)

TI 6160.46 DSR/DSSC ARTCC Site Support Management Manual

TI 6160.47 Display System Replacement (DSR) Console Test Bench User's Manual

TI 6160.48 DSR/DSSC Software Problem Determination Manual

TI 6160.49 DSR/DSSC DSR Computer System Operation's Manual

TI 6160.50 Display System Replacement (DSR) Air Traffic Controller User's Manual

TI 6160.51 DSR/DSSC DSR Console Hardware Technical Manual

TI 6160.52 DSR/DSSC DSR Console Test Bench Hardware Technical Manual

TI 6160.53 DSR/DSSC Rack-Mounted Components Hardware Technical Manual (Book 1 of 3, Book 2 of 3, and Book 3 of 3)

TI 6160.54 DSR/DSSC EDARC System Interface (ESI) Hardware Technical Manual

TI 6160.55 DSR/DSSC Software Maintenance Overview Manual

TI 6160.56 DSR/DSSC System Release Receipt and Tailoring Manual

TI 6160.57 DSR/DSSC Adaptation Data Reference Manual

TI 6160.58 DSR/DSSC ARTCC System Management Manual

TI 6160.59 DSR/DSSC System Overview Manual

TI 6160.60 DSR/DSSC Display System Replacement (DSR) DSR/HOST Interface Control Document

TI 6160.61 Display System Replacement (DSR) Interface Control Document for Interfaces between (EDARC) and (ESI)

CASE FILE/ NAS CHANGE PROPOSAL

(P;EASE TYPE OR PRINT NEATLY)

Page 1 of _____

1. Case File Number	2. For CM Use	Case File Received Date	NCP Issuance Date	NCP Number

3. Scope of Change

☐ Local ☐ National
☐ Test

4. Reason For Change

☐ Safety ☐ Technical Upgrade ☐ Systems Interface
☐ Requirements Change ☐ Design Error ☐ Parts Unavailability
☐ Baseline ☐ Other

5. Priority

☐ Normal
☐ Time-Critical
☐ Urgent

6. Justification of Time Critical/Urgent Priority

7. Supplemental Change Form

☐ ECR/ECP ☐ TES ☐ N/A

7a. Supplemental Change No. _____

7b. Supplemental Change Initiation Date _____

8. Case File Originator	9. Originator's Organization	10. Telephone Number	11. Case File Initiation Date

12. Type of Document Affected

☐ CPFS ☐ SPEC ☐ MTBK ☐ _____
☐ TI ☐ DWG ☐ IRD/ICD

13. Baseline Document Number(s)

14. CI Subsystem Designator	15. FA Type	16. CI Component Designator

17. Facility Identifier (FACID)	18. Facility Code (FACCODE)	19. Cost Center Code	20. Software System Version

21. Title

22. Description: (a) identification of problem, (b) proposed change, (c) interface impact, (d) cost estimate (e) funding source (f) benefits/risks, (g) Schedule (h) Other (e.g. logistics, quality, etc.)

(a)

(b)

(c)

(d)

(e)

(f)

(g)

(h)

Blocks 1 through 22 are to be completed by originator and/or the NCP coordinator. If a block is not applicable, write n/a. Attach additional sheets if necessary. See current revision of NAS–MD–001 for detailed completion instructions.

Case File Number	NCP Number	Page 2 of ___

23. Name and Title of Originator's Immediate Supervisor (Type/Print Clearly)	Signature	Date

24. Facility/SMO Review (AT/AF)

Name	Routing Symbol	Date	Concur	Non-Concur

Routing Symbol	Signature
Date	
Routing Symbol	Signature
Date	

24a. Comments

(Attach additional sheets if necessary)

25. Regional Review

Name	Routing Symbol	Date	Concur	Non-Concur

☐ Recommend Approval (Enter into CM/STAT. Forward to Prescreening)

☐ Disapprove (Return to Originator)

Routing Symbol	Signature
Date	
Routing Symbol	Signature
Date	
Routing Symbol	Signature/Configuration Mgr/NCP Coordinator/ Reg Exec Sec
Date	

25a. Comments

(Attach additional sheets if necessary)

26.

PRESCREENING

Prescreening Office _____

Prescreening Comments:

(Attach additional sheets if necessary)

Reviewers	Routing Symbol	Date	Concur	Non-Concur

Recommended Must Evaluators

☐ Recommend Approval
☐ New Requirement

☐ Recommend Disapproval (Return original to originating office through the Regional NCP Coordinator)

Routing Symbol	Signature
Date	

27. **For Internal Configuration Management Use Only**