ORDER

RECEIVED
AUG 09 1999
By

6630.4A

EN ROUTE COMMUNICATIONS INSTALLATION STANDARDS HANDBOOK

JULY 9, 1999

DEPARTMENT OF TRANSPORTATION
FEDERAL AVIATION ADMINISTRATION

Distribution: A-W(NS,OS,RS)-2; A-X(AF)-3; A-ZY-1; A-FAF-7(LTD)

Initiated By: AND-300

FOREWORD

This order contains procedures, guidance, and reference material to be used in the installation of Air Route Traffic Control Center (ARTCC) facilities, including their installed equipment supporting en route air traffic control communications.

This handbook is based on an orderly approach to facility and equipment upgrade, relocation, modernization, and additions at existing ARTCCs. An effort was made to organize activities logically by presenting tasks requiring completion first which can complement other tasks to help achieve operational mode efficiently.

The expected cost avoidance benefits, to all regions that follow this consolidated standards guide, will accrue from upgraded separate grounding systems with improved bonding requirements, reduced maintenance time using standardized installations, and reduced retrofitting to implement new equipment.

An earnest attempt was made to include all related information needed to improve or expand ARTCC facilities and to standardize their installations of air traffic control communications equipment. Ideas to make the handbook a more useful and beneficial tool are greatly appreciated. Additional information from individuals with direct hands-on experience should be conveyed to AND-300 by calling (202) 493-4808 or by writing to the Communications Integrated Product Team, AND-300, 800 Independence Avenue SW, Washington, DC 20591.

Arnold Meyers

Arnold Meyers
Product Team Lead for Voice and Data Communications

Page No.

TABLE OF CONTENTS

CHAPTER 1. GENERAL 1

1. Purpose 1
2. Distribution 1
3. Cancellations 1
4. Background 1
   a. Existing System 2
   b. Proposed System 2
5. Philosophy 2
   a. ATC Facility Functions 2
      Figure 1-1. Typical CONUS A/G Radio Communications System 3
      (1) En Route Control 4
      (2) Flight Services 4
      (3) Terminal Control 4
   b. En Route Hubs 4
   c. Ancillary En Route Facilities 4
   Figure 1-2. En Route System Facilities 5
6. Summary 6
7.-12. Reserved 6
Chapter 1. Reserved Pages 7-8 6

CHAPTER 2. EN ROUTE FACILITIES 9

SECTION 1. GENERAL 9

13. En Route System 9
   a. ARTCC Area Sectors 9
   b. En Route Coordinated Communications 9
   c. ARTCC Sector Responsibilities 9
      (1) Sector Air Traffic Communications 10
      (2) RCAG Facilities and BUEC Control 10
      (3) Air Traffic Controller Intercommunication 10
   d. ARTCC Area Resectoring 10
14. En Route Facilities Operation 10
   Figure 2-1. ARTCC With Supporting Facilities 11
   a. A/G Communications 12
   b. Interfacility Communications 12
   c. ARTCC Controller Intercom System 12
15. En Route Facilities Configurations 12
16. Remote Communications Facilities (RCF) 13
   a. RCAG Sites 13
   b. RTR Sites 13

Page No.

c. RCO Sites 13
17.-21. Reserved 13

SECTION 2. EQUIPMENT DESCRIPTION 14

22. General 14
a. A/G Communications Equipment 14
b. Ground Radar Aircraft Tracking Equipment 14
c. Weather and Flight Services Data Transfer 15
d. National Radio Communications System (NARACS) 15
23. Voice Switching and Control System (VSCS) 15
a. VSCS Capabilities 15
Figure 2-2. VSCS Functional Block Diagram 16
b. VSCS Equipment 17
c. VSCS Interfaces 17
(1) A/G Switch Interfaces 17
(2) PABX 17
(3) LINCS IP Trunks 17
(4) Voice Recorders 18
24. VSCS BACKUP 18
a. VSCS Training and Backup Switch (VTABS) 18
b. VSCS Emergency Access Radio System (VEARS) 18
25. Master Demarc System (MDS) 18
26. Remote Control System 18
a. Radio Control Functions 19
b. Radio Control Equipment (RCE) 19
c. Remote Maintenance Monitoring System (RMMS) 19
27. Telecommunications 20
a. Intrafacility 20
(1) IC and IP Usage 20
(2) Dual-Jack Modules 20
b. Interfacility 20
(1) Radio Communications Link (RCL) 20
Figure 2-3. Remote Maintenance Monitoring System (RMMS) 21
(2) Low Density Radio Communications Link (LDRCL) 22
(3) Leased Interfacility NAS Communications System (LINCS) 22
(4) T-1 Carriers 22
(5) Bandwidth Manager (BWM) 23
28. Automatic Line Test Equipment (ALTE) 23
29. Interfacility Communications Satellite Networks 23
a. Alaskan NAS Interfacility Communications System (ANICS) 23
b. FAA Telecommunications Satellite (FAATSAT) Network 24
30. Backup Emergency Communications (BUEC) 24

Page No.
a. BUEC Transceivers 24
b. S-BUEC Transmitter/Receiver Pairs 24
Figure 2-4. ARTCC A/G Communication System Redundancy .. 25
31. Voice Recorders 26
a. Magnasync HCVR Tape Transport 26
b. Digital Voice Recorder System (DVRS) 26
32. RF Communications Equipment 26
a. Equipment Types 26
b. Usage 27
33.-40. Reserved 27
Chapter 2. Reserved Pages 28-34 27

CHAPTER 3. MANAGEMENT OF EN ROUTE FACILITIES 35

SECTION 1. ADMINISTRATIVE 35

41. General 35
42. Notice To Airmen (NOTAM) 35
a. Shutdown NOTAM 35
b. Return to Service NOTAM 35
c. Commissioning NOTAM 35
43. Planning 35
a. Land Acquisition 36
b. Funding 36
c. Need to Acquire Determination 36
44. Tasks 36
a. Site Investigation 37
a. Site Investigation 37
b. Environmental Assessment (EA) 37
c. Land Office Survey 37
d. Temporary Agreement 37
e. Zoning Restrictions 37
f. Temporary Permits 38
g. Environmental Due Diligence Audit (EDDA) 38
45.-50. Reserved 38

SECTION 2. CONFIGURATION MANAGEMENT 39

51. Documentation 39
a. Changes 39
b. Contractor Requirements 39
52. Modifications 39
a. Engineering Change Proposal (ECP) 39
b. NAS Change Proposal (NCP) 40
c. Electronic Equipment Modification (EEM) 40
d. Site Bulletins 40
e. IRD/ICD 40

Page No.

f. As-Built Drawings 40
53.-58. Reserved 40

SECTION 3. HUMAN FACTORS ENGINEERING 41

59. Environmental 41
60. Weight 41
61. Reach 41
62. Display Area 41
63. Safety 42
64. Security 42
65.-68. Reserved 42

SECTION 4. TECHNICAL 43

69. General 43
70. Design Considerations 43
a. Electromagnetic Interference (EMI) 43
b. Electromagnetic Compatibility (EMC) 43
(1) RF Interference (RFI) 44
(a) Intermodulation (IM) 44
(b) Receiver Desensitization 44
(2) Electrical Noise 44
c. Siting Criteria 44
(1) Surrounding Terrain 45
(a) Atmospheric Refraction 45
(b) Ground Reflections 45
(2) Ground Conductivity 45
Figure 3-1. Nomogram For Radio Horizon (RLOS) . 46
Figure 3-2. Interfering Ground Reflected and Direct Signal Paths 47
Figure 3-3. Typical Ground Reflection Coefficients for Horizontal and Vertical Polarization 48
(3) Ambient RF Noise 49
Figure 3-4. Typical Average Ambient Noise Level 49
Table 3-1. Typical Electrical Parameters For Earth and Water 50
71. Installation 51
a. Washington Office ARTCC Project Manager 51
b. Regional ARTCC Project Coordinator 51
c. System Management Office (SMO) 52
d. Technical Officer Representative (TOR) 52
e. Installation Team Leader 53
f. Installation Team 53
72. Testing and Evaluation 53

Page No.
73.-80. Reserved 53
Chapter 3. Reserved Page 54 53

CHAPTER 4. GROUNDING AND LIGHTNING PROTECTION..... 55

SECTION 1. GENERAL REQUIREMENTS 55

81. Grounding Systems 55
a. Earth Electrode System (EES) 55
b. Lightning Protection System..... 55
(1) Structures 55
Figure 4-1. ARTCC Ground Systems-Terminating Wire Sizes Recommended 56
(2) Exterior Cables 57
c. Multipoint Ground System..... 57
(1) Multipoint Ground System Coverage 57
(2) Signal Reference Grid (SRG) 57
(3) 'Chassis Ground' Equipment Caution 58
d. Single Point Ground System..... 58
e. AC Power Protection Ground..... 58
(1) AC Service Entrance Wye Transformer 59
(2) AC Service Derived Neutral 59
82. EMC and EMI Protection 59
83. Transient and Surge Protection 60
a. Transient Suppression..... 60
b. Surge Protection..... 60
84.-88. Reserved 60

SECTION 2. EARTH ELECTRODE SYSTEM (EES) 61

89. General 61
90. Environmental Conditions Evaluation 61
91. Earth Resistance 61
92. Design Parameters 62
a. Structure Earth Electrode Grounds..... 62
b. Ground Rod System..... 62
(1) Depth of Penetration 62
(2) Number and Spacing of Rods 63
(3) Interconnection of Rods 63
c. Alternative Ground Plane Systems..... 63
(1) Underground System 63
Figure 4-2. Change in Ground Rod Effective Resistance Per Quantity and Spacing of Rods 64
(2) Above Ground System 65
d. Chemical Enhancement..... 65
93. Installation 65

Page No.
a. Pre-installation Tasks 65
b. Cautions 65
a. Pre-installation Tasks 65
c. New Earth Electrode System (EES) 66
(1) Ground Rod Location 66
(2) Interconnecting Cable 66
(a) Trenches 66
Figure 4-3. Typical ARTCC Earth Electrode System (EES) Components 67
Figure 4-4. Typical ARTCC Earth Electrode System (EES) 68
(b) Rod Connections 69
(3) Access Wells 69
(4) Earth Resistance Measurements 69
d. Repair of Existing EES 69
(1) Interconnecting Conductor 69
(2) EES Cables 69
Figure 4-5. Exothermic Welding Process 70
Figure 4-6. Ground Rod Welds 71
Figure 4-7. Ground Rod/Interconnecting Cable Installation Detail 72
Figure 4-8. Earth Electrode System (EES) Access Well Detail 73
e. Upgrade of Existing EES 74
(1) Interconnecting Conductor 74
(2) Ground Rod Performance 74
(3) Overall Grounding System 74
Figure 4-9. Connections to Earth Electrode System (EES) 75
(4) Earth Resistance Measurements 76
f. Alternative Ground Plane System 76
(1) Soil Installation 76
(a) Conductor Burial 76
(b) Conductor Connection 76
(c) Main Ground Connection 76
(2) Rock Surface Installation 76
(a) Conductor Placement 77
(b) Main Ground connection 77
g. Chemical Enhancement 77
h. Documentation of EES Installation 78
i. Materials Required 78
94. ARTCC Main Ground Plate/Bus 78
95. Main Ground Plate/Bus Installation 78
a. Main Ground Plate/Bus 78
b. Main Ground Cable PVC Conduit 78
Figure 4-10. Trench Method of Soil Treatment 70
Figure 4-11. Alternate Method of Soil Treatment 80

Page No.

Table 4-1. ARTCC Earth Electrode System Installation Materials 81
Figure 4-12. ARTCC Main Ground Plate/Bus Installation 82
c. Main Ground Conductor 83
96.-98. Reserved 83
Figure 4-13. ARTCC Main Ground Cable PVC Conduit Installation 84

SECTION 3. LIGHTNING PROTECTION SYSTEM 85

101. Requirements 85
a. Air Terminal Zone of Protection 85
b. Air Terminal Ground Path 85
Figure 4-14. Determining Air Terminals for Buildings Under 50 Feet Tall 86
Figure 4-15. Air Terminal Protection on Flat Surfaces 87
Figure 4-16. Determining Air Terminals for Towers 88
c. Earth Connection 89
102. Installation 89
a. Structure Protection Using Air Terminals 89
(1) Air Terminal System 89
(2) Structure Down Conductors 89
(a) Self Supported Towers 90
(b) Guyed Towers 90
b. Landline Protection 90
(1) Ferrous Conduit 90
Figure 4-17a. Tower Grounding and Lightning Protection 91
Figure 4-17b. Tower Grounding and Lightning Protection 92
Figure 4-18. Guyed Tower Grounding and Lightning Protection 93
(2) Buried Guard Wire 94
(3) Transmission Line Shield Grounding 94
(4) Transient Suppressors 94
c. Power Line Surge Arresters 94
103.-107. Reserved 94
Figure 4-19. Guard Wire Lightning Protection for Underground Cables 95

SECTION 4. MULTIPOINT GROUND SYSTEM 96

108. Requirements 96
109. Installation 96

Page No.

a. Multipoint Ground Plate 96
Figure 4-20. Multipoint Ground Plate 97
b. Multipoint Branch Ground Plates 98
c. Signal Reference Grid (SRG) 98
d. Multipoint Ground Conductors 98
(1) 'Daisy Chaining' 98
(2) Color Coded Conductors 98
Figure 4-21. Multipoint Ground Installation 99
Table 4-2. Multipoint Ground Conductor Sizes 100
e. 'Chassis Ground' Equipment Caution 101
f. Multipoint Conductor Bolted Connections 101
g. Structures 101
110.-115. Reserved 101
Figure 4-22. Split-Bolt Ground Connection 102

SECTION 5. SINGLE POINT GROUND SYSTEM 103

116. Requirements 103
a. Single Point System Branches 103
b. Single Point Ground Conductors 103
117. Installation 103
a. Isolation of Single Point Ground 104
b. Single Point Ground Plate 104
c. Single Point Ground Bus 104
d. Equipment Shield Terminations 104
118.-122. Reserved 104
Figure 4-23. Single Point Ground Plate 105
Figure 4-24. Single Point Ground Installation 106

SECTION 6. TRANSIENT AND SURGE PROTECTION SYSTEMS 107

123. Requirements 107
124. AC Power Protection 107
a. Pre-installation Tasks 107
(1) Evaluation of Existing Surge Protection 107
(2) Voltage and Phase of AC Power Service 107
(3) Coordination of System Shutdown 107
(4) Location of Surge Arresters 108
b. Installation Tasks 108
(1) Operating Systems Outage 108
(2) AC Entrance Power 108
Figure 4-25. AC Surge Arrester Installation, Grounded AC Service 109
Figure 4-26. AC Surge Arrester Installation, Ungrounded AC Service 110
(3) Arrester Installation 111
c. Restoration of Service 111

Page No.
d. Documentation 111
125. Landline Protection 111
a. Axial Landlines 111
(1) Bulkhead Installation 111
Table 4-3. AC Power Surge Arrester Installation Materials 112
(2) Axial Suppressor Ground 113
(3) Axial Transient Suppressor Selection 113
b. Paired conductor and Multiconductor Landlines 113
(1) Circuit Card Suppressor Ground 113
Table 4-4. Dissimilar Metals 114
Figure 4-27a. Coaxial Transient Suppressor Mounting 115
Figure 4-27b. Coaxial Transient Suppressor Mounting 116
Figure 4-28. Landline Protector Circuit Assembly Installation 117
(2) Other Ground Connections 118
c. Pre-installation Tasks 118
(1) Evaluation of Existing Protection Equipment ... 118
(2) Coordination of Systems Shutdown 118
d. Existing Facility Installation 118
(1) Wiring Signal and Equipment Grounds 119
(2) Documentation of Junction Box Installation 119
e. New Facility Installation 119
(1) Lightning Protection Junction Box 119
(2) Inspect Systems for Proper Operation 119
(3) Return Systems to Service 119
Table 4-5. Lightning Protection Circuit Installation Materials 120
Figure 4-29. Landline Lightning Protection Junction Box Detail 121
Figure 4-30. Lightning Protection Circuit Card Installation 122
(4) Documentation of Installation 123
126. Antenna System Protection 123
127.-132. Reserved 123

SECTION 7. TESTING 124

133. Criteria 124
134. Earth Electrode System (EES) 124
a. Drawings 124
b. Procedure 124
(1) Measure Earth Resistance 124
(a) Resistance Tester Operation 124
(b) Probe Location 125

Page No.
(2) Locate Ground Rod 125
(3) Evaluation of Test 125
135. Lightning Protection System 125
Figure 4-31. Earth Resistance Tester 126
a. Lightning Strike Protection 127
(1) Air Terminals 127
(2) Conductors 127
(a) Installation 127
(b) Condition 127
(3) Zone of Protection 128
b. AC Power Surge Protection 128
c. Transient Suppression 128
(1) Axial Transient Suppressors 129
(2) Non-Axial Landline Transient Suppressors 129
(3) Conduit 129
(4) Armored Cable 129
(5) Guard Wires 129
136. Multipoint Ground System 129
a. Ground Plate 130
b. Electrical Paths 130
c. Building Grounding 130
(1) Steel Buildings 130
(2) Non-Metallic Buildings 130
137. 'Chassis Ground' Equipment 130
138. Single Point Ground System 131
a. Ground Plate 131
b. Cables 131
c. Bus Bars 131
139.-145. Reserved 131
Chapter 4. Reserved Pages 132-140 131

CHAPTER 5. POWER DISTRIBUTION SYSTEM 141

SECTION 1. AC POWER 141

146. General 141
a. ARTCC Electrical Loads 141
b. Critical Electrical Power 141
Figure 5-1. ARTCC Alternating Current Power Distribution 142
c. Noncritical Electrical Power 143
147. AC Power Distribution 143
a. Incoming AC Surge Control 144
b. AC Power Buses 144
148. AC Power Panel 144
a. Main AC Power Panel 144

Page No.
Figure 5-2. ARTCC Primary AC Power System 145
b. AC Panelboard 146
149. Critical Power Bus 146
150. Essential Power Bus 147
151. Phase Balancing 147
a. Equal Phase Impedances 147
b. Load Configuration 147
152. Grounding Requirements 147
a. AC Power Protection Ground 147
(1) AC Power Ground Conductor 148
(2) AC Power Ground Connections 148
(a) Pigtail Power Cords 148
(b) Chassis AC Connector 148
(c) AC Power Receptacles 148
(3) AC Power Protection Ground Path 149
b. Earth electrode System Connection 149
c. Service Transformer Ground 149
d. Main Service Conductor Upgrade 149
Figure 5-3. Main AC Service Enclosure Ground Split-Bolt Connection 150
153. Installation 151
a. Main Service Disconnect Means 151
(1) AC Power Ground Buses 151
(a) Grounded Secondary AC Service 151
Figure 5-4. Grounded Secondary AC Service 152
(b) Ungrounded Secondary AC Service 153
(2) AC Power Surge Arresters 153
b. AC Power Service Wireways 153
(1) Conduit 153
(a) Steel (Ferrous) Conduits 153
Figure 5-5. Ungrounded Secondary AC Service 154
Figure 5-6. Main AC Panel Service Disconnect Enclosure with Arresters 155
Figure 5-7. Typical Cabinet Top Wireway Layout, Top View 156
Figure 5-8. Typical Cabinet Top Wireway Installation, Elevation View 157
(b) Non-ferrous Conduits 158
(2) Metallic Duct 158
c. AC Power Wiring 158
(1) AC Conductors 158
(2) Color coding 158
Table 5-1. Wire AC Characteristics 159
(a) AC Phase Wires 159
(b) AC Neutral Wires 159
(c) AC Power Ground 159
(3) Conductor Identification 160

Page No.

d. AC Power Circuit Breakers 160
e. Wiring Installation Tests 160
(1) Load Balancing 160
Figure 5-9. Power Distribution Organization .. 161
Figure 5-10. Typical ARTCC Single Phase AC Power Panelboard 162
Figure 5-11. Typical ARTCC 3-Phase AC Power Panelboard 163
(2) Insulation Resistance Test 164
(3) Neutral Isolation Test 164
(4) Earth Resistance Test 164
(5) Operating Test 164
154.-158. Reserved 164

SECTION 2. DC POWER 165

159. General 165
160. DC Power Distribution 165
a. AC Power Interface 165
b. AC Rectifiers 165
Figure 5-12. ARTCC DC Power System Block Diagram .. 166
Figure 5-13. Typical DC Power Rack 167
c. Battery Chargers 168
d. Batteries 168
e. Battery Disconnect Panel 168
f. DC Distribution Panel 168
g. Battery Alarm and Monitor Panel 168
161. DC Power-Up Procedures 168
Figure 5-14. Typical ARTCC DC Load Distribution ... 169
Figure 5-15. Battery Alarm and Monitor Panel 170
a. Charge Batteries 171
b. Adjust Power Supply 171
162. Grounding Requirements 171
163. Installation 171
a. Uninterruptible Power Supply (UPS) System 171
(1) UPS Battery System 172
(2) Engine Generators 172
(3) AC Power Source Switch 172
(4) DC/AC Power Inverter 172
b. Power Conditioning System 172
c. DC Power Wireways 173
(1) Conduit 173
(a) Steel (Ferrous) Conduits 173
(b) Non-ferrous Conduits 173
(2) Metallic Duct 173
d. DC Power Wiring 174
(1) DC Conductors 174

Page No.
(2) Color Coding 174
164.-170. Reserved 174
Chapter 5. Reserved Pages 175-180 174

CHAPTER 6. EQUIPMENT INSTALLATION METHODOLOGY 181

SECTION 1. SYSTEM DESCRIPTION 181

171. General 181
172. Cabinets 181
a. Cabinet Rack Standard Details 181
b. Cabinet Rack Installation 181
(1) Rack Alignment 181
(2) Bolting Adjoining Racks 181
(3) Anchoring Racks 181
Figure 6-1. Solid-Sided Cabinet Rack - Type III 182
173. Cable Trays, Ladders, and Ducts 183
a. Open Cable Trays and Ladders 183
b. Metal Duct and Cable Tray Installation 183
(1) Continuous Metal Wireways 183
(2) Wireway Installation Hardware 183
Figure 6-2. Typical Cabinet Top Wireway Layout, Top View 184
(3) No Rough Metal Edges 185
(4) Wireway Alignment 185
(5) Metal Tray and Duct Grounding 185
(6) Wireway Isolation 185
(7) Wireway Hangers 185
174. Conduit 185
a. Rigid Steel Conduit 185
b. Intermediate Metal Conduit (IMC) 186
c. Rigid Aluminum Conduit 186
d. Rigid Plastic Conduit 186
175. Raised Flooring 186
a. Under Floor Air Plenum 186
b. Under Floor Wiring 186
(1) Signal and Control Wiring 187
(a) Cable Trays 187
(b) Optical Fiber Cable 187
(2) AC Power Wiring 187
(3) Fire Detection Wiring 187
176. 'D' Channel 187
177.-185. Reserved 187
Figure 6-3. Under Floor Cable Tray, Duct, and Conduit Installation 188

Page No.

SECTION 2. INSTALLATION OF EQUIPMENT 189

186. Equipment Rack Configuration 189
a. ARTCC Operations Room..... 189
(1) Sector ATC Consoles 189
(2) Plan for Change 189
b. ARTCC Equipment Room..... 189
Figure 6-4. Typical Equipment Locations 190
(1) Rack Spacing 191
(2) Lighting 191
(3) Parts Storage and Maintenance Areas 191
(4) Expansion 191
187. Equipment Installation 191
a. Facility Configuration Management (CM) 192
b. Equipment Layout..... 192
c. Related Equipment..... 192
d. Equipment Accessibility..... 192
e. Unused Rack Space..... 192
f. Power supply Location..... 192
188.-195. Reserved 192

SECTION 3. EQUIPMENT RACK WIRING AND CABLE INSTALLATION 193

196. Rack Terminal Blocks 193
a. Terminal Block Mounting..... 193
b. Terminal Block Wiring..... 193
(1) Wiring Terminations 193
(2) Securing Cables 193
197. Rack Power Wiring Installation 193
a. AC Power Installation..... 193
b. DC Power Installation..... 194
198. Audio and Control Cable Installation 194
a. Rack Baffle Plate..... 194
b. Wire Pair Shield..... 194
(1) Shield Discontinuity 194
(2) Analog and digital Systems 195
c. Cable Junctions..... 195
199. RF Coaxial Cable Installation 195
a. RF Transmission Line Type..... 195
(1) Solid Dielectric Cable 195
(2) Foam Dielectric Cable 195
(3) HELIAX Cable 196
b. RF Coaxial Cable Selection..... 196
c. RF Cable Junctions..... 196
(1) Antenna Patch Panel 196
Figure 6-5. Typical Attenuation vs Frequency for RF Coaxial Cable 197

Page No.

Figure 6-6. Attenuation Correction Factor for Temperature in RG Type Coaxial Cable with Foam Dielectric 198
(2) Coaxial Relay and RF Body Panel 199
(3) Receive Coaxial Relay Panel 199
(4) Antenna Coaxial Cable Junction Box 199
200.-208. Reserved 199
Figure 6-7. Wall Mounted Antenna Patch Panel 200

SECTION 4. VOICE SWITCHING AND CONTROL SYSTEM (VSCS) 201

209. General 201
a. A/G Communications 201
b. G/G Communications 201
c. Reconfiguration 201
d. Bus Local Area Network (BusLAN) 201
Figure 6-8. VSCS Functional Block Diagram 202
210. Equipment Configuration 203
a. VCE Subsystem 203
b. Switching Subsystem 203
c. Maintenance Position Equipment Subsystem (MPES) 203
d. Control Subsystem 203
Figure 6-9. VSCS Subsystem Block Diagram 204
Table 6-1. VSCS/AAS Equipment 205
(1) Data Entry Operator (DEO) Positions 206
(2) AT DEO Position 206
(3) AF DEO Position 206
e. System Interconnect Subsystem (SIS) 206
f. Contractor Traffic Simulation Unit (CTSU) 206
g. VCE Trainer (VCET) 206
211. Materials and Equipment 206
a. VSCS Intermediate Distribution Frame (VSCS IDF) 207
b. Radio Interface IDF (RI IDF) 207
c. VSCS Distribution Frame (VDF) 207
d. Master Demarcation System (MDS) 207
e. Distribution Frame Equipment 207
Figure 6-10. VSCS Distribution Frame Groups 208
f. 110 Frame Blocks 209
g. Frame Distribution Cables 209
h. Connector Type 209
(1) Male Cable Connector 209
(2) Female Cable Connector 209
Figure 6-11. 110 Frame Connectors for Front Blocks 1-8 210
Table 6-2. AT&T Standard Wiring Code Table 211
212. Installation 212
a. 110 Frame Installation 212

Page No.
b. Distribution Frames 212
c. Frame Blocks 212
d. Dual Connectors 212
e. Connections 213
f. Shielding and Grounding 213
213. RI IDF Interface 213
a. Equipment Connections 213
b. Transition Cables 213
c. Block Arrangement 213
Figure 6-12. 110 Frame (Cut View) Distribution Cable Routing 214
d. RI IDF Connections 215
(1) Selective Mode 215
(2) Split Mode 215
(3) Radio Interface (RI) Pin Assignments 215
(4) RI IDF Cross Connects 215
Figure 6-13. RI IDF Block Layout (Split Mode) 216
Table 6-3. RI IDF Connector Block Port Assignments 217
(5) RI Jack Panels 217
214. VDF Interfaces 218
a. VDF BUEC Frame 218
(1) 110 Block Arrangement 218
(2) BUEC Block Connections 218
(3) VDF BUEC Wiring 218
Figure 6-14. Radio Interface (RI) Jack Panel (JP) Layout 219
Figure 6-15. VDF BUEC Block Layout 220
Table 6-4. VDF BUEC Connector Block Port Assignments 221
b. VDF PABX Frame 222
(1) PABX Block Connections 222
(2) PABX Block Connectors 222
(3) VDF PABX Wiring 222
Figure 6-16. VDF PABX Frame Layout 223
Table 6-5. VDF PABX Connector Block Assignments 224
c. VDF HCVR or DVRS Frame 225
(1) HCVR and DVRS Block Circuits 225
(2) HCVR and DVRS Block Connections 225
(a) Method 1 225
(b) Method 2 225
Figure 6-17. HCVR VDF Rear Layout, Method 1 Block Connections 226
Figure 6-18. HCVR VDF Front Layout, Method 1 Block Connections 227

Page No.
(3) VDF HCVR Wiring 228
(4) VDF DVRS Wiring 228
d. VDF 6-Wire G/G Frame 228
215. VSCS Emergency Access Radio System (VEARS) 228
a. Operation 228
b. Equipment 228
Figure 6-19. HCVR VDF Rear Layout, Method 2 Block Connections 229
Figure 6-20. HCVR VDF Front Layout, Method 2 Block Connections 230
Figure 6-21. HCVR Jack Panel Layout 231
(1) Single Module 232
(2) Dual Module 232
(3) Quad Module 232
(4) Loudspeaker 232
216.-220. Reserved 232

SECTION 5. MASTER DEMARCATION SYSTEM (MDS) 233

221. General 233
222. MDS Equipment Configuration 233
a. Physical Location 233
b. A/G Interface 233
c. G/G Interface 233
d. BUEC Interface 233
e. PABX Interface 234
f. Exiting Circuits 234
223. Materials and Equipment 234
a. MDS Frames 234
b. MDS Blocks 234
c. Dual Connectors 234
d. Cable Connectors 235
(1) Male Cable Connectors 235
(2) Female Cable Connectors 235
224. Installation 235
a. MDS Frame Installation 235
b. MDS Rack Installation 236
c. MDS 110 Terminal Blocks 236
d. Dual Connectors 236
e. MDS Interface Cabling 236
f. MDS Interconnection Wiring 237
g. Shielding and Grounding 237
225. MDS Interfaces 237
a. External Line Interface 237
b. ARTCC Interface Connections 237
226.-232. Reserved 238

Page No.
SECTION 6. A/G GROUND RADIO CONTROL SYSTEMS 239

233. General 239
a. Control Function..... 239
b. Maintenance Monitoring..... 239
234. Equipment Configuration 239
a. CSTI RCE..... 239
b. C-RCE Assembly..... 240
c. R-RCE Assembly..... 240
d. Centralized Maintenance System (CMS)..... 240
235. Materials and Equipment 240
Figure 6-22. Signal Interface Cables (SIC) for CSTI RCE Units 241
a. CSTI RCE Equipment..... 242
b. Data Voice Card (DVC)..... 242
(1) C-RCE Assembly..... 242
(2) R-RCE Assembly..... 242
c. Jack Interface Card (JIC)..... 242
d. Dual Channel Enclosure (DCE)..... 242
(1) DCE Power Supplies..... 242
Figure 6-23. CSTI C-RCE Subassembly Block Diagram 243
Figure 6-24. CSTI R-RCE Subassembly Block Diagram 244
(2) Communication and Power Card (CPC), CPC-001 & CPC-002 245
e. Centralized Maintenance System (CMS)..... 245
236. Installation 245
a. Grounding Connections..... 245
b. Rack Mounted RCE..... 245
Figure 6-25. CSTI Centralized Maintenance System (CMS) Block Diagram 246
c. Ventilation Requirement..... 247
d. Uniform Arrangement..... 247
237. Radio Control Equipment (RCE) Interfaces 247
a. CSTI RCE Interfaces..... 247
b. Equipment Audio Interfaces..... 247
c. Telephone Trunk Interfaces..... 248
(1) Primary/Backup Mode..... 248
(2) Separated Transmitters and Receivers..... 248
(3) Dual Control Sites..... 248
d. Signal Cables..... 248
e. RCE Input/Output Connectors..... 249
238.-244. Reserved 249
Figure 6-26. CSTI Type B C-RCE Signal Interfaces.. 250
Figure 6-27. CSTI R-RCE Signal Interfaces..... 251

Page No.

SECTION 7. REMOTE MAINTENANCE MONITORING SYSTEM (RMMS) 252

245. General 252
246. Equipment Configuration 252
247. Materials and Equipment 252
a. Maintenance Processor Subsystem (MPS) 252
b. Maintenance Data Terminal (MDT) 253
c. Printers 253
d. Independent RCE System Monitor 253
248. Installation 253
a. Other MDT Cabling 253
b. Non-MPS Position Cabling 254
249. Interface 254
250.-255. Reserved 254

SECTION 8. TELECOMMUNICATIONS 255

256. ARTCC Installed Equipment 255
a. ATC Position Equipment 255
(1) General 255
(2) Equipment Configuration 255
(a) VIK 255
Figure 6-28. ARTCC Communications Overview ... 256
(b) VDM 257
(c) Loudspeaker (LS) Modules 257
(3) Interface 257
b. Supervisory and Maintenance Positions 257
c. NADIN MSN Concentrator and PSN Node 257
(1) General 257
(2) Equipment Configuration 258
(3) Interface 258
d. Data Multiplexing Network (DMN) Node 258
(1) General 258
Figure 6-29. ARTCC Rack Elevation for NADIN PSN Node 259
(2) Equipment Configuration 260
(a) Multiplexing Modems 260
(b) Restoration Equipment 260
(c) Clock Box 260
(d) ARTCC DMN System Elements 260
Figure 6-30. Typical ARTCC Functional Diagram 261
(3) Interface 262
e. Ancillary Equipment 262
257. Interfacility Links 262
a. Radio Communications Link (RCL) 262
(1) General 262

Page No.
Figure 6-31. Typical ARTCC DMN Equipment Interfaces 263
Figure 6-32. High Density RCL Terminal Equipment Bay Configuration 264
(a) Path analysis 265
(b) Racks 265
(c) Power 265
(d) Grounding 265
(e) Waveguide 265
(f) Automatic Network Management System (ANMS) 266
(2) 8 GHz Backbone RCL Configuration 266
(a) Frequency Diversity 266
Figure 6-33. ARTCC RCL ANMS ACORN Central System and Network 267
(b) Space Diversity 268
(c) Antennas 268
(d) Multiplex Terminal Equipment 268
(e) Insert/Drop Repeater Equipment 268
(f) Jackfields 269
(g) Broadband Multiplexing Option 269
(h) Direct-To-Line Multiplexer 269
(i) Microwave Radio 269
Figure 6-34. Granger DTL Frequency Division Multiplex Plan 270
Figure 6-35. FR8 Radio Terminal Transmitter Block Diagram 271
Figure 6-36. FR8 Radio Terminal Receiver Block Diagram 272
(j) Simplex Radio 273
(k) Orderwire Channel 273
(3) 900 MHz UHF LDRCL Configuration 273
(a) Transmitter Signal Strength 273
(b) Antennas 273
(4) 1.8 GHz LDRCL Configuration 273
Figure 6-37. FR8 Radio Space Diversity Receiver Block Diagram 274
(a) Transmitter Signal Strength 275
(b) Transmission Lines 275
(c) Antennas 275
(5) 23 GHz LDRCL Equipment Configuration 275
(a) Antenna Options 275
(b) Equipment Location 275
(6) LDRCL Equipment 275
Table 6-6. LDRCL Equipment Dimensions & Weight 276
(7) Interface 277

Page No.

b. Leased Interfacility NAS Communications System (LINCS) 277
(1) General 277
(2) Equipment Configuration 277
Figure 6-38. Radio Interconnection Diagram, High Density Terminal Station Auxiliary Bay 278
Table 6-7. RCL System Key Parameter Standards & Tolerances with Audio Frequency Interface Levels 279
(3) Interface 281
c. High Capacity Carriers (T1) 281
(1) General 281
(2) Equipment Configuration 281
Figure 6-39. LINCS Network Structure 282
Table 6-8. Industry Standards 283
Table 6-9. U.S. Time Division Multiplexing (TDM) Digital Signal Hierarchy 284
(a) Data Service Unit (DSU) 285
(b) Channel Service Unit (CSU) 285
(3) Interface 285
d. Satellite Links 285
(1) Equipment Configuration 285
Figure 6-40. DS1/T1 Service Connection Example 286
(2) Alaskan NAS Interfacility Communications System (ANICS) 287
(a) Equipment Configuration 287
(b) Interface 287
(3) FAA Telecommunications Satellite (FAATSAT) System 287
258. Automatic Line Test Equipment (ALTE) 287
259.-267. Reserved 288

SECTION 9. BACKUP EMERGENCY COMMUNICATION (BUEC) EQUIPMENT ... 289

268. General 289
269. Equipment configuration 289
a. BUEC Radios 289
(1) ITT Transceiver 289
(2) Motorola CM-200 Radios 289
b. RCE Equipment 290
270. Installation 290
a. VSCS BUEC Installation 290
(1) Transceiver BUEC Channel 290
(2) S-BUEC Channel 290
b. Remote Site Installation 290

Page No.

Figure 6-41. Comparison of a Primary Channel and a Sustaining-BUEC (S-BUEC) Channel 291
271. Interface 292
272.-281. Reserved 292
Table 6-10. Signals On VSCS and BUEC Terminal Blocks 293

SECTION 10. HIGH CAPACITY VOICE RECORDER (HCVR) 294

282. General 294
283. Equipment Configuration 294
a. Dual Transport Recorder/Reproducer Unit 294
(1) Dual Transport 294
Figure 6-42. Recorder/Reproducer Keypad 295
(2) Volume Unit (VU) Meter Panel 296
(3) Master Synchronizer 296
(4) GPS Receiver 296
(5) Status Indicator Unit 296
b. Portable Reproducer System 297
(1) Playback Tape Transport 297
(2) Information Compiler and VU Meter 297
(3) Dual Deck Cassette Tape Recorder 297
(4) Foot Controller Unit 298
(5) Headphones 298
(6) Bulk Tape Degausser Unit 298
284. Materials and Equipment 298
a. Recorder/Reproducer Cabinet 298
(1) GPS Receiver Antenna 298
(2) Status Indicator Unit 298
b. Portable Reproducer Cabinet 299
c. Bulk Tape Degausser Unit 299
d. 60 Channel Recording Tapes 299
e. Recording Tape Storage Cabinet 299
f. Mixing Amplifiers 299
285. Installation 299
a. Cabinet Tiedown 300
b. Power Connection 300
c. Component Assembly 300
d. Software Programming 300
Figure 6-43. Seismic Mounting of Equipment 301
Table 6-11. HCVR Programmed Software Variables 302
286. Interface 303
a. VDF Interface 303
b. GPS IRIG-B Interface 304
c. Status Indicator Interface 304
287-293. Reserved 304

Page No.

SECTION 11. Digital Voice Recorder System (DVRS) 305

294. General 305
295. Equipment Configuration 305
a. DVRS Recorder 305
(1) Digital Recorder Unit (DRU) 305
Figure 6-44. DVRS Recorder and Reproducer Components 306
(a) Audio Line Interface (ALI) CCA 307
(b) Audio Digital Interface (ADIF-II) CCA 307
(c) Audio Processing Array (APA) CCA 307
(d) Logger Auxiliary Function (LAF) and LAF Input/Output (I/O) CCAs 307
Figure 6-45. DRU Audio Signal Flow Block Diagram 308
(2) NiceLog Workstation 309
(3) Storage Drives 309
(4) GPS Receiver 309
(5) Remote Alarm 309
(6) Ethernet Hub 310
b. DVRS Reproducer 310
296. Materials and Equipment 310
a. Rack Enclosures 310
b. LRU Spares 310
c. Optional Equipment 310
297. Installation 310
a. AC Power 311
b. Cables 311
298. Interface 311
a. Analog Interfaces 311
(1) Audio Inputs 311
(2) Audio Outputs 311
b. PCM Digital Interfaces 312
c. Remote Alarm Interface 312
d. Small Computer Serial Interface (SCSI) 312
299.-307. Reserved 312

SECTION 12. RF COMMUNICATIONS EQUIPMENT 313

308. General 313
309. Equipment Configuration 313
a. Local A/G Emergency Frequency Equipment 313
b. Local BUEC Equipment 313
Figure 6-46a. Typical Transmitter RF Cabling System Without Combiner 314
Figure 6-46b. Typical Transmitter RF Cabling System With Combiner 315

Page No.
Figure 6-46c. Typical Receiver RF Cabling System Without Multicoupler 316
Figure 6-46d Typical Receiver RF Cabling System With Multicoupler 317
310. Materials and Equipment 318
a. A/G Radios 318
b. Antenna System 318
311. Installation 318
a. Exterior RF Path Plan 319
(1) Antennas 319
(2) Tower Coaxial Cable Junction Box 319
b. Interior RF Transmission Plan 319
Table 6-12. Antenna System Materials List 320
(1) Bulkhead Plate 321
(2) Antenna Patch Panel 321
312. Interface 321
313.-326. Reserved 321
Chapter 6. Reserved Pages 322-350 321

CHAPTER 7. SYSTEM TEST AND ACCEPTANCE 351

SECTION 1. EQUIPMENT ACTIVATION, TEST, AND CHECKOUT 351

327. Introduction 351
328. General 351
329. Voice Switching and Control System (VSCS) 351
a. Activation Requirements 352
(1) Interface Testing 352
(2) VEARS Testing 352
(3) VTABS Testing 352
b. Documentation 352
330. Master Demarc System (MDS) 352
a. Zero Loss Lines (ZL^2) 352
b. Activation Requirements 353
(1) Lightning Protection 353
(2) Transient Protection 353
(a) Landlines 353
(b) Coaxial Cable 353
c. Documentation 354
331. Remote Radio Control System 354
332. Remote Maintenance Monitoring System (RMMS) 354
a. MPS Software 354
(1) Monitor and Control Software (MCS) 354
(2) Maintenance Management System (MMS) Software .. 355
b. MPS Interfaces 355
(1) MPS to RMS 355

Page No.
(2) MPS to MPS 355
(3) MPS to MCC 355
(4) MPS to MDT/Printer 355
(a) MPS to Fixed MDT 356
(b) MPS to Portable MDT 356
(5) MPS to NADIN PSN (NADIN II) NODE 356
333. Telecommunications 356
a. NADIN MSN (NADIN I) 356
(1) MSN Concentrator to MSN Switch 357
(2) MSN Concentrator to User 357
b. NADIN PSN (NADIN II) 357
(1) PSN Node to PSN Node 357
(2) PSN Node to Users 358
(3) PSN Node to MSN Gateway 358
c. Data Multiplexing Network (DMN) 358
(1) Interface Requirements 358
(2) Transmission Requirements 358
(3) Backup Channel Provisions 359
d. RCL and LDRCL 359
e. LINCS 359
(1) ARTCC LINCS Node 359
(2) LINCS Network Requirements 359
334. Backup Emergency Communications (BUEC) 360
a. BUEC Radio Equipment 360
b. Antenna System 360
335. High Capacity Voice Recorder (HCVR) 360
a. Channel Input Impedance 360
b. Voice Channel Level 361
c. Time Source Interface 361
336. Digital Voice Recorder System (DVRS) 361
337. RF Communications Equipment 361
a. Radio Equipment 361
b. Antenna System 361
(1) Transmit Antenna System Test 362
(a) RF Path VSWR 362
(b) Local Control 362
(2) Receive Antenna System Test 362
(a) RF Source 362
(b) RF Path Test 362
(c) Receiver Testing 363
338.-346. Reserved 363

SECTION 2. SYSTEM ACCEPTANCE 364

347. General 364
348. Contractor Acceptance Inspection 364
349. Joint Acceptance Inspection 364

Page No.
a. Joint Acceptance Inspection Report Checklist..... 364
b. Joint Acceptance Inspection Report Exception List and Clearance Record..... 364
350. Technical Reference Data 364
351. Technical Performance Record 364
358.-366. Reserved 365
Chapter 7. Reserved Pages 366-380 365

APPENDIX 1. ACRONYMS.....A1-1

APPENDIX 2. REFERENCED DOCUMENTS.....A2-1

APPENDIX 3. EQUIPMENT SPECIFICATIONS A3-1

1. Purpose A3-1
2. Equipment Categories A3-1
3. Equipment Summaries A3-1
4.-5. Reserved A3-1
Table 1. ARTCC Communications Equipment Categories... A3-2
Table 2. CM-200/VT VHF Transmitter, Typical Characteristics A3-5
Table 3. CM-200/UT UHF Transmitter, Typical Characteristics A3-7
Table 4. CM-200/VR VHF Receiver, Typical Characteristics A3-9
Table 5. CM-200/UR UHF Receiver, Typical Characteristics A3-11
Table 6. AN/GRT-21 VHF Transmitter, Typical Characteristics A3-13
Table 7. AN/GRT-22 UHF Transmitter, Typical Characteristics A3-15
Table 8. AN/GRR-23 VHF Receiver, Typical Characteristics A3-17
Table 9. AN/GRR-24 UHF Receiver, Typical Characteristics A3-19
Table 10. CM-50 VHF Linear Power Amplifier, Typical Characteristics A3-21
Table 11. CM-51 UHF Linear Power Amplifier, Typical Characteristics A3-23
Table 12. CT-27221 VHF Transmitter Combiner, Typical Characteristics A3-25
Table 13. CT-37222 UHF Transmitter Combiner, Typical Characteristics A3-26
Table 14. Typical Transmitter Combiner Cavity Power Loss and VSWR A3-27

Page No.

Table 15. MDP-1-1113 VHF Receiver Multicoupler, Typical Characteristics A3-28
Table 16. MDP-1-2240 UHF Receiver Multicoupler, Typical Characteristics A3-30
Table 17. Typical Receiver Multicoupler - Signal Sensitivities A3-32
Table 18. Antenna Products Company (APC) Antenna - Electrical Characteristics A3-33
Table 19. Antenna Products Company (APC) Antenna - Electrical Characteristics A3-34
Table 20. Antenna Products Company (APC) Antenna - Electrical Characteristics A3-35
Table 21. Antenna Products Company (APC) Antenna - Physical Characteristics A3-36
Table 22. Antenna Products Company (APC) Antenna - Physical Characteristics A3-37
Table 23. Antenna Products Company (APC) Antenna - Physical Characteristics A3-38
Table 24. CODEX 3600 Modems, DMN DATAMUX A3-39
Table 25. CODEX 3500 CSU/DSU, DMN DATAMUX A3-41
Table 26. CODEX 6250 Digital Transmission Multiplexer (DTM), DMN DATAMUX A3-42
Table 27. CODEX 2185 Digital Bridge, DMN DATAMUX A3-43
Table 28. Digital A/B Switches, DMN DATAMUX A3-44
Table 29. I/F Accessories for DMN DATAMUX A3-44
Table 30. CODEX 9800 ANMS Equipment, DMN DATAMUX A3-45
Table 31. Statistical Time Division Multiplexer (STDM), DMN STATMUX A3-46
Table 32. NADIN PSN Node Packet Switch Equipment A3-48
Table 33. RCL 8 GHz Backbone High Density Terminal .. A3-50
Table 34. 900 MHz Low Density RCL (LDRCL) Stand Alone Link A3-55
Table 35. 1.8 GHz Low Density RCL (LDRCL) Equipment A3-59
Table 36. Microwave 1.8 GHz Grid Parabolic Dish Antennas A3-61
Table 37. Microwave 1.8 GHz Solid Parabolic Dish Antennas A3-62
Table 38. 8 GHz Low Density RCL (LDRCL) Equipment ... A3-63
Table 39. 23 GHz Low Density RCL (LDRCL) Equipment .. A3-66

CHAPTER 1. GENERAL

1. PURPOSE. This order provides procedures, guidance, and reference material to be used in the installation, relocation, or modernization of an Air Route Traffic Control Center (ARTCC). ARTCCs coordinate and control National Airspace System (NAS) en route airborne traffic through air/ground (A/G) radios located in Remote Centers Air/Ground (RCAG). Order 6580.3A, *Remote Communications Facilities Installation Standards Handbook*, contains standards for RCAGs. Air Route Surveillance Radar (ARSR), Automated Flight Service Station (AFSS), and Terminal Radar Approach Control (TRACON) facilities and other facilities with which ARTCCs communicate are not treated in Order 6630.4A, but their functions relevant to en route air traffic control (ATC) are identified.

2. DISTRIBUTION. This order is distributed to division level in the office of the Program Director for Communications and Aircraft Acquisition, NAS System Engineering, Air Traffic Plans and Requirements, NAS Transition and Implementation, and Systems Maintenance and Operational Support Services; to branch level in regional Airway Facilities Divisions; to director level at the William J. Hughes Technical Center and the Mike Monroney Aeronautical Center; and with limited distribution to Airway Facilities System Management Offices (SMO) and System Support Centers (SSC).

3. CANCELLATIONS. Federal Aviation Administration (FAA) Order 6630.4, *En Route Communications Installation Standards Handbook*, dated May 16, 1983, is canceled.

4. BACKGROUND. Each ATC facility is responsible for a specific primary function in the coordinated air traffic system. A network of ARTCC facilities provides control for en route air traffic (AT). ATC Towers (ATCT) and TRACON facilities provide ATC for terminal areas, with TRACONS also responsible for the en route airspace above terminal areas. AFSS facilities supply weather information and relevant flight data. Ancillary remote facilities provide ATC facilities with aircraft position information from radar sites and provide networking capabilities to augment A/G communications. ATC is provided for the airspace over the contiguous United States (CONUS), Alaska, Hawaii, and Atlantic and Pacific ocean zones. Three Combined Center Radar Approach Control (CERAP) facilities, in Guam, Puerto Rico, and Hawaii, provide both ARTCC and TRACON en route functions from each facility. AT coverage extends from ground surface at ATCT terminal areas to 60,000 feet altitude in en route RCAG service volumes.

a. Existing System. AT controllers in each ARTCC communicate with en route aircraft through A/G radio frequency (RF) communications equipment installed in unattended RCAG facilities. Types of en route and terminal support facilities in the ATC system are depicted in Figure 1-1, *Typical CONUS A/G Radio Communications System.* The ATC system accommodates unique regional requirements, but it was developed without standard plans for facilities or uniform equipment designated system-wide. Attempts to repair or replace obsolete equipment revealed a need for uniformity and modernization, with standardization in facilities and equipment. A more standardized system will reduce maintenance time and costs and will benefit from enhanced capabilities of more modern equipment which incorporates new technologies.

b. Proposed System. Modernization, standardization, and expanded coverage of the existing A/G communications system will continue through consolidation, relocation, and upgrade of en route A/G communications and control facilities and equipment. Coverage will be examined to reduce existing gaps in coverage and to accommodate newly defined controlled airspaces as required. Use of new technologies and more commercial off the shelf (COTS) uniform equipment will enhance system capabilities, simplify operations, add operational efficiency, improve reliability, and reduce maintenance time and costs in the NAS. System integrity, reliability, and continuity must be maintained to guarantee availability of AT communications for traffic safety. FAA NAS Implementation (ANI) will provide management and engineering assistance under the following six defined platforms: terminal, en route, infrastructure, surveillance/weather, communications/ telecommunications, and navigation aids.

5. PHILOSOPHY. Control of en route AT is coordinated by ARTCC air traffic controllers communicating with pilots through A/G radio equipment located in remote RCAG or Backup Emergency Communications (BUEC) facilities. Therefore, the ARTCC is the primary facility treated in this order. ARTCC traffic controllers are responsible for en route AT until each aircraft is handed off to another ARTCC, ATCT, TRACON, or military facility. Each ARTCC, ATCT, TRACON, and AFSS control center is attended. Therefore, AT controllers can communicate with other facilities via telephone lines, via an FAA owned microwave Radio Communications Link (RCL), or via an ultra high frequency (UHF) or microwave Low Density RCL (LDRCL) system. Data on facilities that support ARTCC functions will be provided herein for clarity only.

a. ATC Facility Functions. Facilities in the coordinated ATC A/G communications system have specific primary functions and provide three different types of service.

CHAPTER 1. GENERAL

1. PURPOSE. This order provides procedures, guidance, and reference material to be used in the installation, relocation, or modernization of an Air Route Traffic Control Center (ARTCC). ARTCCs coordinate and control National Airspace System (NAS) en route airborne traffic through air/ground (A/G) radios located in Remote Centers Air/Ground (RCAG). Order 6580.3A, *Remote Communications Facilities Installation Standards Handbook*, contains standards for RCAGs. Air Route Surveillance Radar (ARSR), Automated Flight Service Station (AFSS), and Terminal Radar Approach Control (TRACON) facilities and other facilities with which ARTCCs communicate are not treated in Order 6630.4A, but their functions relevant to en route air traffic control (ATC) are identified.

2. DISTRIBUTION. This order is distributed to division level in the office of the Program Director for Communications and Aircraft Acquisition, NAS System Engineering, Air Traffic Plans and Requirements, NAS Transition and Implementation, and Systems Maintenance and Operational Support Services; to branch level in regional Airway Facilities Divisions; to director level at the William J. Hughes Technical Center and the Mike Monroney Aeronautical Center; and with limited distribution to Airway Facilities System Management Offices (SMO) and System Support Centers (SSC).

3. CANCELLATIONS. Federal Aviation Administration (FAA) Order 6630.4, *En Route Communications Installation Standards Handbook*, dated May 16, 1983, is canceled.

4. BACKGROUND. Each ATC facility is responsible for a specific primary function in the coordinated air traffic system. A network of ARTCC facilities provides control for en route air traffic (AT). ATC Towers (ATCT) and TRACON facilities provide ATC for terminal areas, with TRACONS also responsible for the en route airspace above terminal areas. AFSS facilities supply weather information and relevant flight data. Ancillary remote facilities provide ATC facilities with aircraft position information from radar sites and provide networking capabilities to augment A/G communications. ATC is provided for the airspace over the contiguous United States (CONUS), Alaska, Hawaii, and Atlantic and Pacific ocean zones. Three Combined Center Radar Approach Control (CERAP) facilities, in Guam, Puerto Rico, and Hawaii, provide both ARTCC and TRACON en route functions from each facility. AT coverage extends from ground surface at ATCT terminal areas to 60,000 feet altitude in en route RCAG service volumes.

a. Existing System. AT controllers in each ARTCC communicate with en route aircraft through A/G radio frequency (RF) communications equipment installed in unattended RCAG facilities. Types of en route and terminal support facilities in the ATC system are depicted in Figure 1-1, *Typical CONUS A/G Radio Communications System*. The ATC system accommodates unique regional requirements, but it was developed without standard plans for facilities or uniform equipment designated system-wide. Attempts to repair or replace obsolete equipment revealed a need for uniformity and modernization, with standardization in facilities and equipment. A more standardized system will reduce maintenance time and costs and will benefit from enhanced capabilities of more modern equipment which incorporates new technologies.

b. Proposed System. Modernization, standardization, and expanded coverage of the existing A/G communications system will continue through consolidation, relocation, and upgrade of en route A/G communications and control facilities and equipment. Coverage will be examined to reduce existing gaps in coverage and to accommodate newly defined controlled airspaces as required. Use of new technologies and more commercial off the shelf (COTS) uniform equipment will enhance system capabilities, simplify operations, add operational efficiency, improve reliability, and reduce maintenance time and costs in the NAS. System integrity, reliability, and continuity must be maintained to guarantee availability of AT communications for traffic safety. FAA NAS Implementation (ANI) will provide management and engineering assistance under the following six defined platforms: terminal, en route, infrastructure, surveillance/weather, communications/ telecommunications, and navigation aids.

5. PHILOSOPHY. Control of en route AT is coordinated by ARTCC air traffic controllers communicating with pilots through A/G radio equipment located in remote RCAG or Backup Emergency Communications (BUEC) facilities. Therefore, the ARTCC is the primary facility treated in this order. ARTCC traffic controllers are responsible for en route AT until each aircraft is handed off to another ARTCC, ATCT, TRACON, or military facility. Each ARTCC, ATCT, TRACON, and AFSS control center is attended. Therefore, AT controllers can communicate with other facilities via telephone lines, via an FAA owned microwave Radio Communications Link (RCL), or via an ultra high frequency (UHF) or microwave Low Density RCL (LDRCL) system. Data on facilities that support ARTCC functions will be provided herein for clarity only.

a. ATC Facility Functions. Facilities in the coordinated ATC A/G communications system have specific primary functions and provide three different types of service.

FIGURE 1-1. TYPICAL CONUS A/G RADIO COMMUNICATIONS SYSTEM

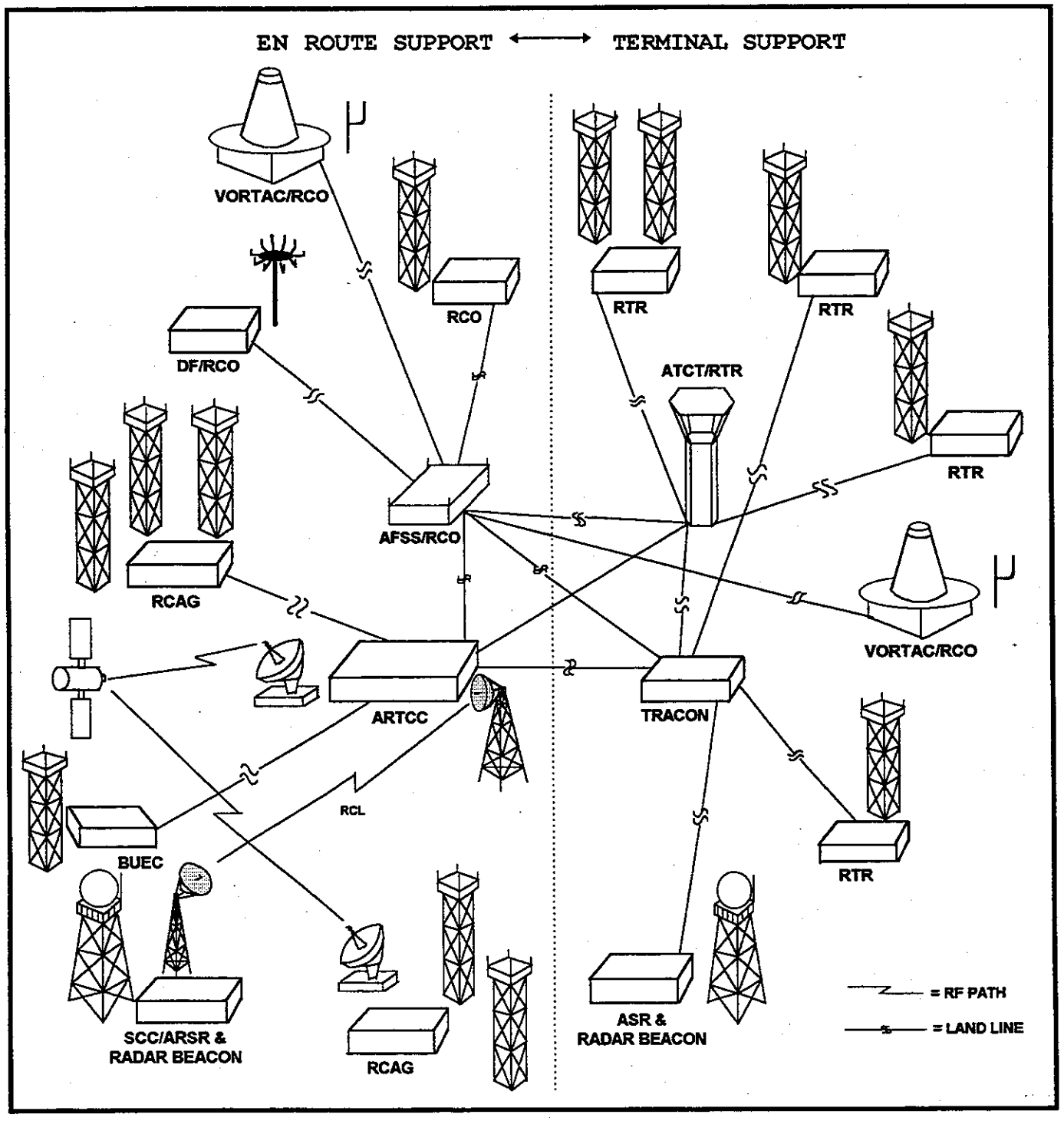

(1) En Route Control. En route traffic control is governed by ARTCC AT controllers. A/G communications equipment for ARTCC traffic controllers is located in unattended collocated or remote RCAG facilities and in BUEC installations located separate from RCAGs for site diversity. Operation of RCAG and BUEC A/G radio equipment is controlled from ARTCCs. ARTCC facilities operate as communication hubs supported by aircraft position information obtained from remote ARSRs. Radar beacons, distance measuring equipment (DME), and navigational aid (NAVAID) equipment located at Very High Frequency (VHF) Omnidirectional Range (VOR), Tactical Air Navigation (TACAN), or collocated VOR/TACAN (VORTAC) sites supply current position data directly to aircraft.

(2) Flight Services. Flight services and weather information is furnished to ARTCCs, to ATC related facilities, and to aircraft from attended AFSS facilities, which are consolidated Flight Service Stations (FSS). A/G radio communications equipment for AFSS sites is located in unattended Remote Communications Outlets (RCO).

(3) Terminal Control. Terminal area traffic is controlled primarily from ATCTs. ATCT AT controllers are guided by information from TRACON facilities which track aircraft positions using Air Surveillance Radar (ASR) and radar beacons. A/G radio communications equipment for ATCT controllers is located in unattended Remote Transmit/Receive (RTR) A/G communications facilities. Both ATCT and TRACON facilities employ RTR Remote Communications Facilities (RCF) for A/G RF communications.

b. En Route Hubs. The en route communications system consists of a network of ARTCC hubs exchanging information with other ARTCCs, CERAPs, other control facilities, and unattended support facilities primarily over landlines. Satellite links provide connectivity in oceanic zones and over terrain with no landline access. Microwave RCLs can transmit long range radar (LRR) and beacon data from ARSRs to ARTCCs and also can provide links between RCAGs and ARTCCs for A/G communications. Figure 1-2, *En Route System Facilities*, shows approximate locations of ARTCC and some RCAG facilities. ARTCC AT controllers communicate with en route aircraft remotely using RF A/G transmitters and receivers located in RCAG RCFs.

c. Ancillary En Route Facilities. Located in each hub area to support ARTCC ATC are RCAG, ARSR, AFSS, and TRACON facilities and BUEC equipment installations. FAA Order 6580.3A, *Remote Communications Facility Installation Standards Handbook*, provides information and installation standards for RCAG facilities. BUEC system information is provided in FAA Order 6600.2, *Backup Emergency Communications*

FIGURE 1-2. EN ROUTE SYSTEM FACILITIES

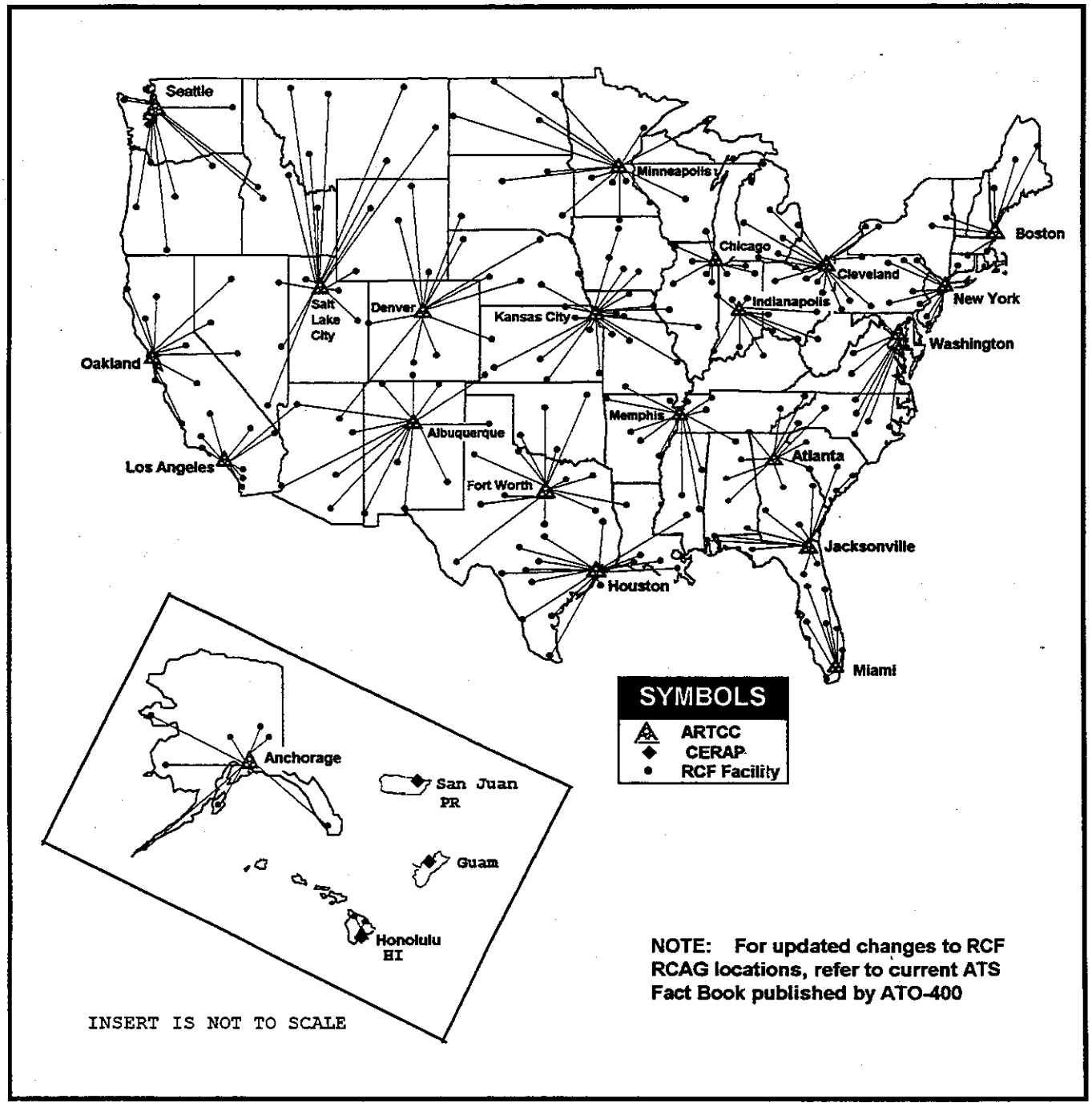

Installation Instructions. Each ARTCC communicates also with ATCTs, military facilities such as Air Force Radar Approach Control (RAPCON) facilities or Navy Radar AT Control Centers (RATCC), and commercial air carrier terminals within its jurisdiction to transfer control of en route or landing aircraft or as needed. Also, ARTCC Airway Facilities (AF) maintains communications with AF maintenance personnel in System Support Centers (SSC) and Work Centers (WC).

6. SUMMARY. This order provides standards and information for the uniform installation, operation, and testing of ARTCC facilities and equipment. Communications equipment common to both ARTCC and RCAG facilities is defined, and relevant information for RCAG and other support facilities is included as necessary for clarity. Information on en route facilities management is provided also.

7.-12. RESERVED.

CHAPTER 2. EN ROUTE FACILITIES

SECTION 1. GENERAL

13. EN ROUTE SYSTEM. A network of ARTCC hubs controls the en route system. Each ARTCC controls as much of the en route airspace within a specific bounded volume as is possible from its strategically located RCAG ground sites. This volume is defined as the radio coverage area in which signals of -87 dBm (10 microvolts) signal strength can be received at an RCAG facility from almost all aircraft locations in that airspace volume. Each RCAG must provide signals of no greater than 14 dB at the receiver of any en route aircraft to protect the airborne equipment.

a. ARTCC Area Sectors. The ARTCC area A/G radio service volume is divided into irregularly shaped polyhedron shaped sector volumes. A sector shape is defined by the altitude range it must cover and the transmit power allowed. Each sector is assigned to an air traffic controller who is responsible for control of aircraft within that sector. The controller establishes contact with all aircraft entering the sector. The controller identifies each aircraft and controls its flight path until its handoff to an adjacent sector, another ARTCC, a TRACON, or a terminal for landing or is released from the system.

b. En Route Coordinated Communications. Each ARTCC communicates with LRR and beacon equipment collocated with the radar to provide ARTCC AT controllers with data to locate and track commercial, general aviation, and military aircraft. Other pertinent flight data is available also to each ARTCC controller for sector traffic. All en route aircraft operating under instrument flight rules (IFR) or in ARTCC controlled air space must maintain radio contact with an ARTCC. En route A/G communications are routed transparently via remotely located A/G radio equipment in RCAGs. RCAG radios convert each uplink message to RF and each downlink message to audio frequency for further transmission. Landlines, RCLs, and satellite links are used to connect ARTCCs to RCAGs to complete A/G circuits between aircraft and AT controllers.

c. ARTCC Sector Responsibilities. Each ARTCC AT controller has six overlapping communications functions: remote control of RCAG and BUEC equipment for A/G communications, coordination with controllers of adjacent sectors and in adjacent ARTCCs, search and rescue support, administrative support, aircraft services support for sector traffic, and cooperation with law enforcement on airline hi-jack or terrorist activity. These functions require up to five operating positions per sector and are dependent upon a radio telephone communications system

capable of accommodating all functions. The en route communications system gives ARTCC controllers the following broad capabilities.

(1) Sector Air Traffic Communications. Sector air traffic communications include A/G communications with aircraft, support for search and rescue services, and coordinated administrative and aircraft services support for en route traffic. Communications in accord with law enforcement are provided during airline hi-jack or terrorist activity.

(2) RCAG Facilities and BUEC Control. In ARTCCs, air traffic controllers can monitor and control ATC primary A/G channel radio operation in RCAGs. When an RCAG primary A/G channel fails, a controller can select and transmit through a BUEC A/G radio site instead. Along with audio signals sent from an ARTCC to an RCAG or BUEC site, command signals are sent to control A/G equipment.

(3) Air Traffic Controller Intercommunication. A facility intercom (IC) system connects AT controllers in the same ARTCC through headsets or loudspeaker. Interphone (IP) phone communication with controllers in another ARTCC or ATC facility is available over leased telephone company (Telco) or FAA owned landlines or via an RCL.

d. ARTCC Area Resectoring. At times, an ARTCC area requires reassignment of sectors to different traffic controllers to accommodate changes in service to airports, in procedures, or in system usage, for example. The Voice Switching Control System (VSCS) software can be preprogrammed for rapid sector reassignment according to preset authorized resectoring plans. The Air Traffic Area Manager has the ability to switch between predetermined sector maps which include A/G and G/G button locations for all sectors within that area. No physical connections between the VSCS and the Radio Interface Intermediate Distribution Frame (RI-IDF) need to be changed for routine resectoring.

14. EN ROUTE FACILITIES OPERATION. FIGURE 2-1, *ARTCC With Supporting Facilities,* shows an ARTCC as a hub and the facilities with which it communicates to guide and control en route air traffic within its area of responsibility. ARSR radar facilities and VORTAC radio NAVAID facilities provide aircraft identification and location information. AFSS facilities furnish weather, flight plan, and en route services data. Controllers in ARTCCs, ATCTs, and TRACONs communicate over A/G RF channels with pilots and over telecommunication links with each other to exchange flight and weather information, coordinate efforts, or transfer control of aircraft.

FIGURE 2-1. ARTCC WITH SUPPORTING FACILITIES

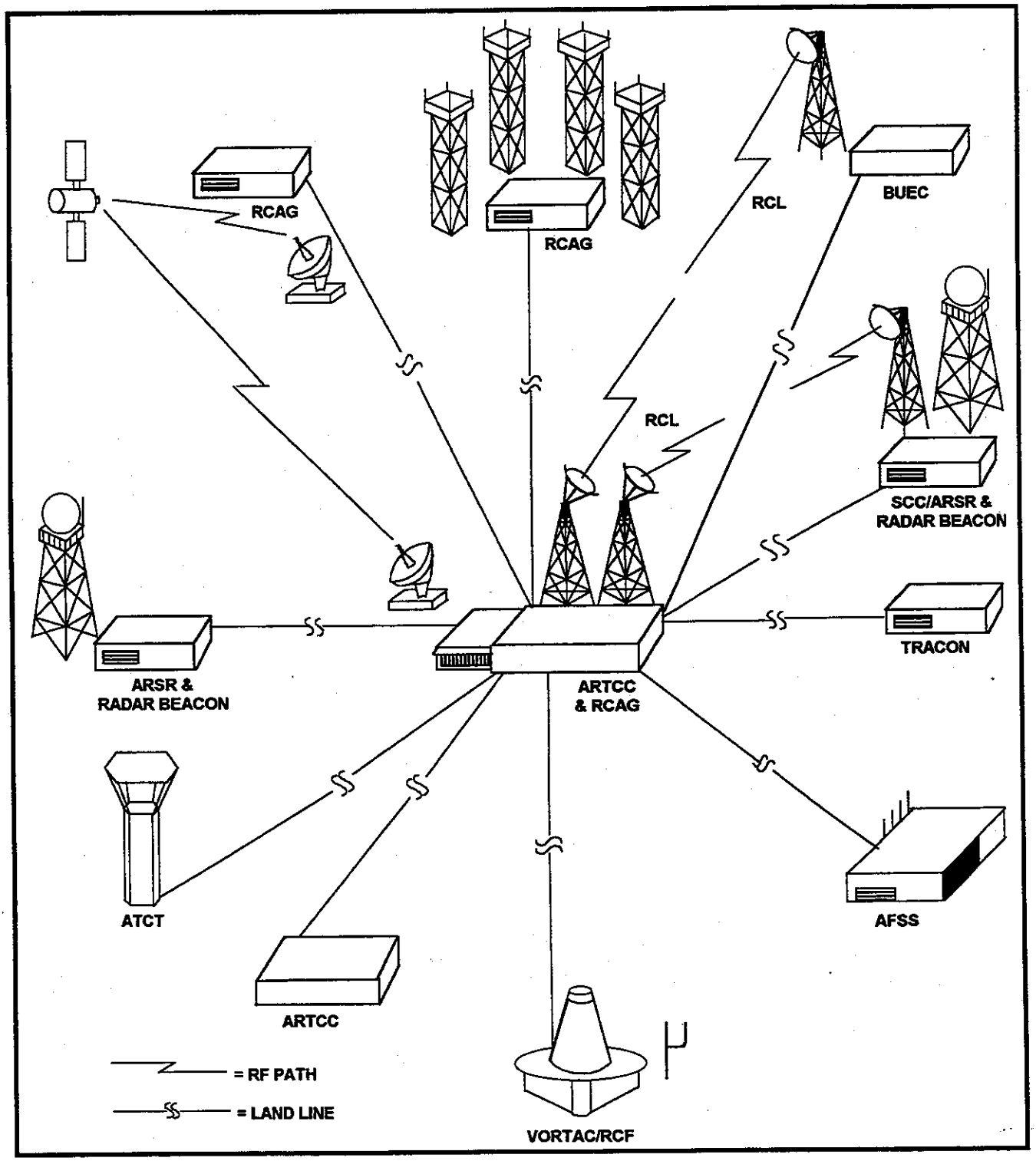

a. A/G Communications. ATC communications with en route aircraft utilize remote A/G radio and antenna equipment installed at unattended RCAG sites. RF frequency bands used are 117.975-137 MHz VHF for both civilian and military ATC and, when required, 225-399.975 MHz UHF only for military and Department of Defense (DoD) ATC. RCAG A/G receivers convert aircraft downlink RF transmissions to audio frequency for ground transmission over FAA owned or leased Telco landlines which complete the A/G link with an ARTCC. For uplink ATC transmissions RCAG A/G transmitters convert from audio to RF. An isolated remote RCAG may convert audio and RF frequencies to employ the 7.125-8.4 GHz RCL network or a satellite frequency communication link instead of a ground link with an ARTCC. A redundant or secondary ground transmission path is provided for each primary A/G channel at an RCAG. At least one path must be provided, and a secondary path is recommended, for each remotely located BUEC A/G channel.

b. Interfacility Communications. Leased Telco and FAA owned landlines are used for most communications between an ARTCC and its support facilities. Long term cost usually determines the choice between an FAA owned or leased path. Each ARTCC contains a node in the backbone of the Leased Interfacility NAS Communications System (LINCS) which is leased from and maintained by a service provider for the FAA to provide path diversity. Many RCAG and ARSR sites are located well over one hundred miles away from an ARTCC to achieve the most area coverage. Where LINCS is not available, reliability for a link between an ARTCC and an RCAG or BUEC site is provided by redundant Telco SS-1 lines, SS-1/SS-4 switchable lines, a backup microwave RCL, or a satellite link. An ARSR is linked to an ARTCC over landlines or by an RCL, LDRCL, or satellite link to provide continuous long range radar and beacon data.

c. ARTCC Controller Intercom System. A facility intercom system is available to each en route sector controller. Traffic controllers within an ARTCC can communicate with each other using the intercom system to exchange information or to coordinate hand off of air traffic changing sectors within the ARTCC coverage area.

15. EN ROUTE FACILITIES CONFIGURATIONS. ARTCC sites normally utilize landlines for interfacility communications but can be configured with microwave antennas to communicate with ARSRs or other distant sites. ARTCCs also have other special purpose antennas on site, such as high frequency (HF) antennas to communicate with other federal facilities during a national disaster. An RCAG site is configured with VHF/UHF antenna towers, landlines, and possibly a microwave RCL or satellite antenna. An RCAG can be collocated on a site which produces no RF interference (RFI). ARSR sites are configured with radar beacons and

radar antennas and use landlines or microwave RCL antennas to communicate with ARTCCs. BUEC sites use stand-alone antennas or available and otherwise unused collocated VHF/UHF antennas. AFSS sites are configured with VHF and UHF antennas mounted on antenna towers or on the building roof.

16. REMOTE COMMUNICATIONS FACILITIES (RCF). RCFs include RCAG, RTR, and RCO facilities. All three types of RCFs contain VHF and UHF antennas and the A/G VHF and UHF radio communications equipment through which air traffic controllers communicate with pilots.

a. RCAG Sites. ARTCC AT controllers communicate with en route pilots transparently through stand-alone RCAGs or RCAGs collocated with other FAA facilities which produce no RFI. RCAG operation is monitored and controlled remotely from ARTCCs to provide responsive and reliable A/G communications. A maximum of twelve each VHF and UHF frequency channels is recommended at a stand-alone RCAG site, but more frequencies can be accommodated if RFI is not a problem. An RCAG may have to add external filters, isolators, combiners, or multicouplers to reduce received or produced RFI. Existing RCAG sites having less than twelve main and standby frequencies may be consolidated for increased system efficiency and reduced operating costs if area coverage, A/G transmission quality, and reliability can be maintained or improved.

b. RTR Sites. TRACON air traffic controllers utilize RTR facilities for A/G VHF and UHF communications with en route or terminal airborne traffic for which they have responsibility in airport areas. ATCT air traffic controllers communicate transparently through RTRs with aircraft originating from or handed off to the ATCT terminal area.

c. RCO Sites. AFSS flight service specialists can communicate weather data and en route advisory information to aircraft in their en route coverage area through A/G radios at collocated or remote RCO sites. AFSS facilities receive weather, radar, and flight management information, usually over landlines, to provide to other FAA facilities over landlines and to en route aircraft as needed through the A/G radios at RCOs. An RCO facility may be a stand-alone site or be collocated with the AFSS, a VORTAC, Directional Finder (DF), or radar equipment site.

17.-21. RESERVED.

SECTION 2. EQUIPMENT DESCRIPTION

22. GENERAL. Various types of ARTCC equipment process signals in the microwave, UHF, VHF, or audio frequency range for internal and interfacility communications used to monitor and control en route air traffic in the NAS. Both analog and digital communications equipment stores, transmits, receives, processes, displays, or switches voice and data signals or controls and monitors radio equipment at FAA remote sites for en route ATC. ARTCCs can provide maintenance monitoring for RCAG sites and for a VOR or VORTAC collocated with an RCAG. Also installed at each ARTCC is a high frequency (HF) National Radio Communications System (NARACS) terminal ready for use during catastrophic loss of communications from national, regional, or local disaster. Portable NARACS transceivers at ARTCCs are kept ready also to support recovery investigations and can be used at aviation crash sites.

a. A/G Communications Equipment. RCAG sites contain VHF and UHF transmit and receive radios and antennas which complete communication circuits between aircraft and ARTCC AT controllers. ARTCCs are linked to RCAG facilities by telephone lines, microwave RCLs, or, over difficult to access terrain or oceanic areas, by HF or satellite links. Operation of RCAG A/G radios is controlled remotely by ARTCC AT controllers through a VSCS and radio control equipment (RCE) units. At VOR sites, NAVAID ground-to-air (G/A) transmitters broadcast automatically on 20 channels within 108-118 MHz to provide line-of-sight omnirange bearing data directly to aircraft. At TACAN sites, NAVAID G/A transmitters broadcast automatically on 126 channels within 960-1215 MHz to provide omnirange bearing and distance data directly to aircraft.

b. Ground Radar Aircraft Tracking Equipment. ARSR sites contain radar and beacon equipment to provide LRR distance and elevation data along with radar beacon azimuth information to continually update ARTCC air traffic location displays. An ARTCC requires Telco lines or FAA owned microwave RCL links to its ARSRs. An ARSR may be collocated with an attended AF maintenance System Support Center (SSC) or Work Center (WC). A Central Computer Complex HOST (CCCH) at each ARTCC tracks en route traffic for identification, position, speed, altitude, and flight path to disseminate data to ARTCC controllers and other facilities before it is needed. Combined Center Radar Approach Control (CERAP) facilities in Honolulu, Hawaii; San Juan, Puerto Rico; and Guam are smaller ATC facilities that do not require high capacity CCCHs and instead utilize En Route Automated Radar Tracking Systems (EARTS).

c. Weather and Flight Services Data Transfer. National Weather Service (NWS) data and flight services data are exchanged between NWS, AFSS, and ATC facilities via Telco lines. VORTAC facilities transfer en route aircraft position data to AFSSs over Telco lines. The AFSS Flight Services Data Processing System (FSDPS) Model 1 upgrade allowed consolidation of older Flight Service Station (FSS) facilities into AFSS facilities. AFSS Model 1 FSDPS equipment forwards Service A weather data and Service B flight data to Flight Data Input/Output Centers (FDIOC) at ARTCCs for processing. ARTCC HOST computers automatically process and then forward the flight services data to other FAA facilities and/or to the AT controllers' printer or computer in the ARTCC as required.

d. National Radio Communications System (NARACS). At each ARTCC, a NARACS HF single sideband (SSB) communications terminal operates in the 3 MHz to 30 MHz band and is kept ready to support the national emergency communications system during loss of normal communications resulting from national, regional, or local disaster. Also at ARTCCs, portable NARACS emergency VHF/FM, 12.5 kHz bandwidth, transceivers are maintained ready to support recovery command and control duties, such as for crash site or aviation security incident investigations.

23. VOICE SWITCHING AND CONTROL SYSTEM (VSCS). A VSCS is a digital switch which accepts ATC analog voice and also voltage level signals that control operation and report status of A/G radio equipment. The VSCS interfaces with RCE units to exchange ATC A/G communications and radio equipment control/status signals with remote A/G radio sites. Routing, switching, connectivity, and control functions are grouped in the VSCS for software predefined ATC positions. Each position sends and receives its own A/G, G/G, and facility communications. The VSCS is shown in Figure 2-2, *VSCS Functional Block Diagram*. From each AT controller position, the VSCS allows Intercom (IC) and Interphone (IP) conversations, BUEC backup A/G channel and main/standby (M/S) primary A/G channel conversations, and control of A/G radios. A VSCS system consists of computer programmed solid state modular equipment for each AT controller position in an ARTCC. A VSCS is compatible with existing ATC M-1 consoles and the Display System Replacement (DSR).

a. VSCS Capabilities. A VSCS switches voice connections between headset intrafacility IC, interfacility ground to ground (G/G) IP, and A/G communications and also relays command signals for remote selection and control of A/G radio equipment. Each en route traffic controller can select either primary A/G channel M/S radio equipment at an RCAG or a dedicated backup A/G channel at a BUEC site. Rapid reconfiguration of pre-mapped controller positions for revised A/G coverage or frequency reassignment, with no disruption of in-progress

FIGURE 2-2. VSCS FUNCTIONAL BLOCK DIAGRAM

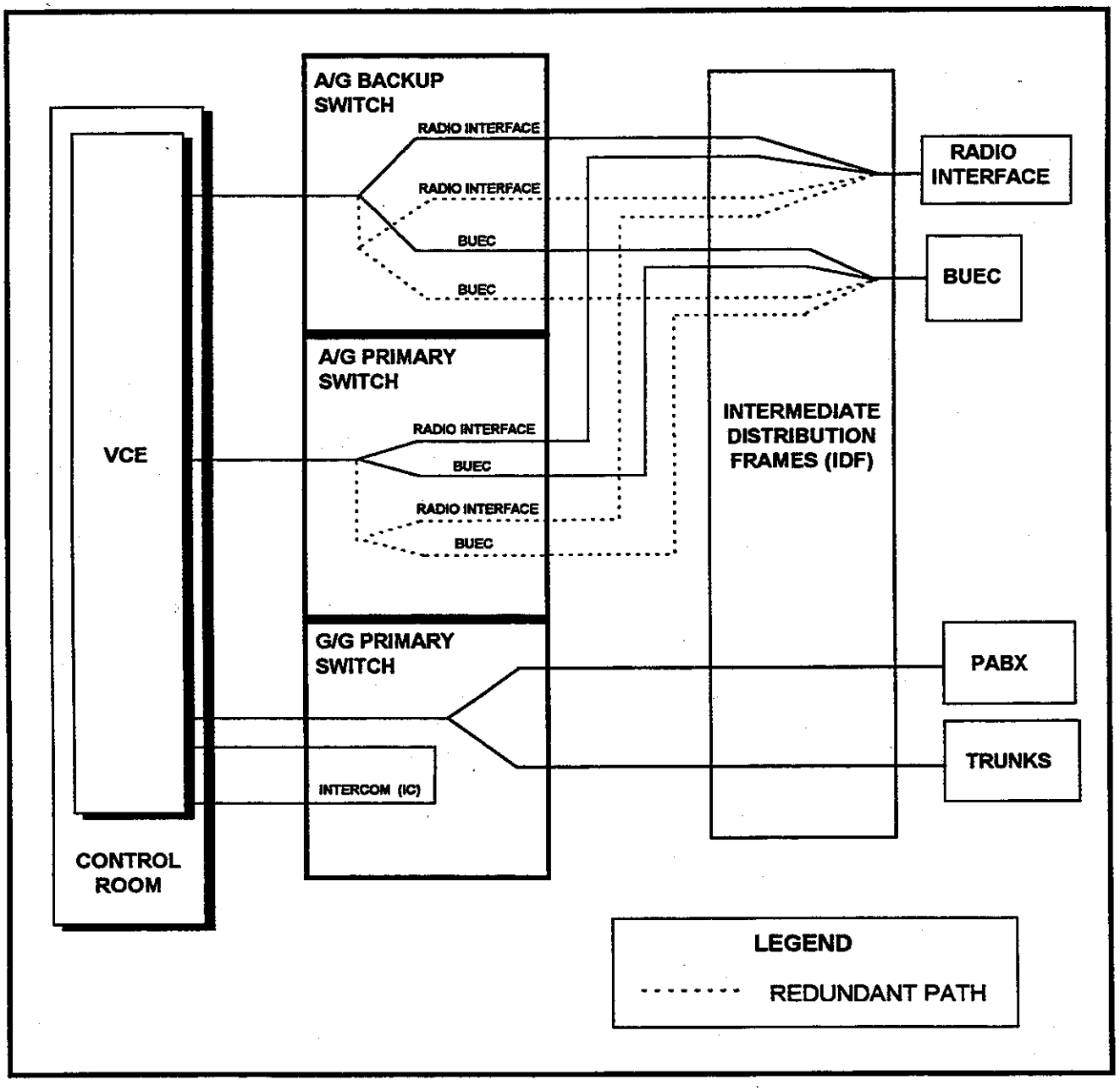

communications, is possible from position, sector, area, or facility level by authorized personnel. A VSCS ATC position can be programmed to separate A/G and G/G functions for use by two AT controllers. Self diagnostics by the VSCS can detect and report failed VSCS modules to mitigate communications disruptions. Also, a VSCS can be expanded to support a maximum of 430 positions, 350 A/G frequencies, 240 BUEC frequencies, 570 trunks and 40 PABX circuits.

b. VSCS Equipment. VSCS console equipment (VCE) includes a VSCS electronic module (VEM), interactive VSCS display modules (VDM), a communications group, a VSCS indirect access keypad (VIK), and supervisory recorders. The switching subsystem consists of a primary A/G switch, a hot backup A/G switch, a G/G switch, discrete monitor and control (DMC) switch selection, and timing equipment. A VSCS maintenance position equipment subsystem (MPES) includes automated voice channel test equipment, printers, combined distribution frame (CDF) patch panels, and VEM, VDM, and VIK console equipment. The control subsystem consists of the central processor complex, high speed printer, internal and external interfaces, and the DMC which is located in the switching subsystem.

c. VSCS Interfaces. Each VSCS interfaces with an ARTCC HOST computer directly through a VSCS G/G switch interface or through the VCE to the VSCS G/G switch interface. To maintain security, there is no connection between the VSCS and the Maintenance Processor Subsystem (MPS). The VSCS A/G and G/G switches accommodate other specific interfaces described below.

(1) A/G Switch Interfaces. Both VSCS redundant A/G switches interface with all control RCE units to communicate through local or remote A/G transmitters and receivers. ATC primary A/G channels and sustaining BUEC (S-BUEC) radio A/G channels all use RCE units for control of their A/G transmitters and receivers. VSCS A/G switches also interface with any remaining older BUEC A/G transceivers through BUEC priority modules and BUEC processors, but the BUEC transceiver channels use no RCE units.

(2) PABX. The VSCS G/G switch interface to the Private Automatic Branch Exchange (PABX) provides each AT controller access to the Federal Telecommunications System (FTS) and to the Public Switched Telephone Network (PSTN).

(3) LINCS IP Trunks. The VSCS G/G switch provides connections for the VSCS IP system to interface with the Leased Interfacility NAS Communications System (LINCS) through the ARTCC Master Demarc System (MDS), also called the Large Facility Demarc

System (LFDS). LINCS can provide direct connections to IP interfaces at VSCSs in other ARTCCs, to Small Terminal Voice Switches (STVS) or Rapid Deployment Voice Switches (RDVS) at ATCTs and TRACONs, and to Integrated Communications Switching Systems (ICSS) at AFSSs.

(4) Voice Recorders. The VSCS also interfaces all voice circuits at ARTCC ATC positions to a High Capacity Voice Recorder (HCVR) system or to a Digital Voice Recording System (DVRS) to provide a legal record that includes accurate time from an interfaced coded time source (CTS).

24. VSCS BACKUP. The VSCS training switch in an ARTCC can be configured to support a limited number of VSCS A/G and G/G circuits. However in case of total failure of the VSCS redundant A/G switches, separate paths to the RCE units are provided by another backup system.

a. VSCS Training and Backup Switch (VTABS). VTABS is the VSCS training switch which can be reconfigured to accommodate a limited number of active VSCS G/G and A/G circuits. If needed, the ARTCC VTABS can provide a limited capacity as a backup switch for the VSCS.

b. VSCS Emergency Access Radio System (VEARS). If a VSCS fails completely, a VEARS jackbox at each controller position is used to bypass the VSCS. VEARS separately connects the controller position directly to the same RCE primary channel paths to the RCAG in order to maintain ATC A/G radio voice communications with sector aircraft.

25. MASTER DEMARC SYSTEM (MDS). The MDS, or large facility demarc system (LFDS), provides transmission lines entering the ARTCC with a physical junction point from which to connect with communication system equipment internal to the facility. Automatic Line Test Equipment (ALTE) in ARTCCs tests incoming analog phone lines at the MDS. The MDS interfaces with external LINCS, Telco, or FAA landlines; with the Telco demarc strip; and with the RCL demarc. Through the MDS, external transmission lines for ATC A/G circuits can interface with ARTCC installed CSTI RCE. The MDS also interfaces with Data Multiplexing Network (DMN) modems and with the National Airspace Data Interchange Network (NADIN), including both the message switched network (MSN) NADIN I concentrator and the packet switched network (PSN) NADIN II network node.

26. REMOTE CONTROL SYSTEM. Each ARTCC basic AT controller position can control remote radio equipment for one VHF and one UHF frequency as a primary A/G communication channel. Each primary channel frequency requires two each A/G transmitters and receivers, main and standby (M/S), for radio redundancy. The primary channel VHF and UHF

frequencies may or may not be accessed at the same time depending upon ATC position channel configuration. M/S transmitters and receivers can be selected individually by the air traffic controller as needed. Access to a BUEC VHF or UHF channel is available also from each controller position for backup use when the primary A/G channel is not available or is unintelligible. Either redundant 4-wire voice grade landlines or RCL backup is required normally between an ARTCC and RCAG for each primary A/G channel, but for less accessible terrain, as in Alaska or oceanic areas, satellite links can provide redundancy.

a. Radio Control Functions. Radio control functions include M/S radio selection, controller PTT keying, receiver muting, and VHF/UHF transmitter interlock. An air traffic controller in the ARTCC sends radio control signals through a VSCS and a control RCE unit to the A/G channel remote RCE unit at a remote A/G radio site. Confirmation of controller commands, status of radio equipment, some site monitoring, and alarm indications are provided through remote RCE units at RCAGs and may be provided from RCE at Sustaining-BUEC (S-BUEC) sites, which use transmitters and receivers identical to RCAG primary channel radios. Each old BUEC transceiver is selected and keyed through the VSCS but cannot use RCE. Instead, each old transceiver requires an old BUEC priority module and old BUEC processor to function with a VSCS.

b. Radio Control Equipment (RCE). Each modular CSTI control RCE unit converts separately the voice and command analog signals from a VSCS to digital formats for internal use. A digital stream of radio control information, with parity checking, is used to modulate a 2880 Hz carrier using frequency shift keying (FSK). This FSK modulated carrier stays within 2400-3000 Hz in the audio band beyond the 300-2400 Hz speech band. The digitized speech is converted back to analog in the 300-2400 Hz audio band for transmission with the FSK modulated 2880 Hz carrier to the selected RCAG or S-BUEC site. A remote RCE unit at the A/G radio site receives analog voice and the FSK carrier and demodulates and decodes the radio control signals to govern radio operation. Similarly formatted data containing command confirmation and/or system status, along with any downlink speech, is returned by the remote RCE unit to the ARTCC on receive downlink audio lines.

C. Remote Maintenance Monitoring System (RMMS). Each ARTCC contains a maintenance data terminal (MDT) console and a maintenance processor subsystem (MPS) for monitoring RCF site maintenance data. In facilities where a remote monitoring subsystem (RMS) and sensors are installed, status information monitored at the site can be sent to the ARTCC. Operational status and key performance parameters of site equipment, facility environmental parameters, facility standby power

source status, and site security can be monitored over a separate voice grade circuit. RMMS elements are shown in Figure 2-3, *Remote Maintenance Monitoring System (RMMS)*. Status of RCL circuits and RCL equipment is monitored by the Automated Network Management System (ANMS), not by the MPS.

27. TELECOMMUNICATIONS. The ARTCC VSCS ATC telecommunications system is very flexible and provides voice IC intrafacility links and IP and A/G communications interfacility links. Support data for ATC is transmitted to and from an ARTCC on telephone lines, via RCL or low density RCL (LDRCL) paths, or for less accessible or oceanic remote sites, via links through earth orbiting satellites.

a. Intrafacility. The VSCS integrates IC, IP, and A/G voice channels into each AT controller headset/handset unit and controls split functions of two dual-jack modules for each controller position.

(1) IC and IP Usage. The VSCS provides connectivity via the IC system between all ARTCC controller position headsets and with supervisory positions. The VSCS IP system allows use of ARTCC position headsets when phoning other ATC facilities and adds capabilities for local and remote call override, call-holding, call-forwarding, call-transfer, position monitoring, switching between headset and loudspeaker, and three types of conference calls.

(2) Dual-Jack Modules. The VSCS can accommodate divided voice functions for the two dual-jack modules at each controller position to allow tailored position configurations. For example, a two-console three-person suite can operate three separate voice circuits, or two controllers can operate one position by configuring A/G voice communications on one dual-jack module and G/G voice on the other module.

b. Interfacility. Telecommunications between an ARTCC and other ATC facilities may include use of LINCS, T-1/DS-1 carrier landlines, a microwave RCL, or a UHF or microwave LDRCL. Each RCL path requires two terminal facilities and any repeater stations necessary for link connectivity.

(1) Radio Communications Link (RCL). The FAA backbone RCL system consists of module replaceable COTS radio link equipment and operates in the 7125 to 8400 MHz frequency band. Equipment resides in link nodes at RCL terminal facilities, such as ARTCCs, and in repeater sites which may include drop/insert capability. Drop/Insert capability requires a direct-to-line (DTL) multiplex system at the site. An ARTCC which is also an Area Control Facility (ACF) can

FIGURE 2-3. REMOTE MAINTENANCE MONITORING SYSTEM (RMMS)

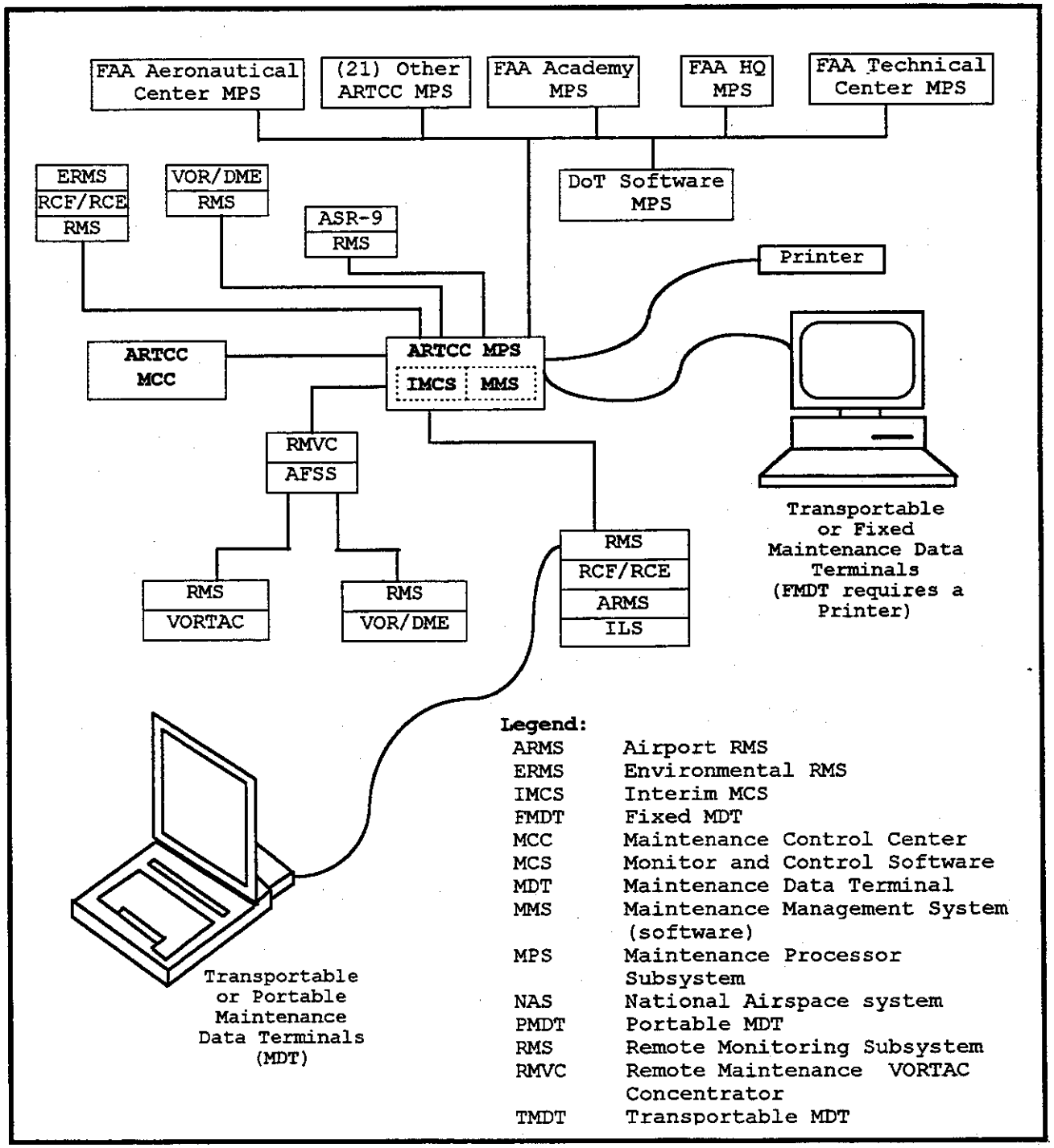

accommodate 960 frequency division multiplexed (FDM) channels plus optional T-1/DS-1 carrier channels or multiplexed broadband radar. Each ACF uses an Automatic Network Management System (ANMS) to monitor and control up to 8 RCL systems with up to 32 terminal and repeater sites per RCL system. Further information on RCL systems is in FAA Order 6540.5A, *Maintenance of Radio Communications Link (RCL) Systems*.

(2) Low Density Radio Communications Link (LDRCL). All LDRCL systems utilize COTS equipment and support the RCL backbone system or provide stand alone direct radio links such as required in remote areas. Three types of LDRCL systems are in use. LDRCL UHF links at 932-935 MHz and 941-944 MHz can accommodate up to 12 voice channels using DTL analog multiplexing and are used for line-of-sight paths up to 60 miles. LDRCL microwave links at CONUS remote sites temporarily may operate at 1.7-1.85 GHz and 2.2-2.29 GHz if causing no RFI to the surrounding area. The 1.71-1.755 GHz band will transfer to only private sector use beginning in 1999-2004. LDRCL systems operating in the 1.8 GHz band are being converted to RCL 8 GHz backbone frequencies and are capable of handling 8 DS-1 digital channels or up to 120 analog channels. Short range LDRCL microwave links, for paths of up to 10 miles, operate in the 21.3-23.6 GHz range and are utilized for low density transmission using pulse code modulation (PCM).

(3) Leased Interfacility NAS Communications System (LINCS). LINCS is leased on a system basis to provide specific functional requirements for particular applications. An individual FAA system may require different grades of channels for voice or data. LINCS consists of service provider maintained reliable redundant backbone network paths and access lines to end users. A LINCS operational service is employed to monitor the status of all LINCS lines between FAA demarc systems. A system monitor detects and displays failures and generates an alarm when one or more channels degrades below performance specification. This allows prompt notification of faults to speed restoration.

(4) T-1 Carriers. One T-1 circuit can carry 24 two-way digitally multiplexed voice channels at 1.544 megabits per second (Mbps). The rate of 1.544 Mbps is defined as digital signal level one (DS-1). ARTCC equipment converts voice channels or data to compressed digital data streams which then are time division multiplexed (TDM) in a channel bank into one data stream for T-1 transmission. Digital data can be multiplexed in also, and error detection and correction is applied. Accurate timing must be maintained. The T-1 carrier provider supplies amplification and repeaters as needed between facilities and maintains the T-1 lines. DMN equipment used with T-1 carrier circuits include modems, multiplexing modems, channel service

units (CSU), data service units (DSU), high-speed time division multiplexers (HSTDM), and automated network management systems.

(5) Bandwidth Manager (BWM). The BWM is a dynamic routing system for voice, data, and video transmissions and uses existing RCL and LINCS paths between ARTCCs. A BWM node is located in each CONUS ARTCC and in the ATC System Command Center (ATCSCC) in Herndon, VA. Adjacent ARTCCs must be connected by a minimum of three paths, consisting of two redundant RCL paths and one LINCS path, making a continuous diverse path and an extremely reliable transmission network linking all CONUS ARTCCs. Each ARTCC BWM dynamically routes user circuits to the next designated BWM node based upon path availability and quality and voice/data priority.

28. AUTOMATIC LINE TEST EQUIPMENT (ALTE). The ALTE is a menu-guided automated analog transmission line test system. It monitors from the MDS, site-to-site analog communication line frequency response, line distortion, noise, on-line power surges, and other line performance specifications. The system provides precise data to isolate faults on remote lines in order to facilitate ordering the correct repair service needed. Digital communication line faults are diagnosed by other systems.

29. INTERFACILITY COMMUNICATION SATELLITE NETWORKS. Use OF Satellite networks can add link reliability and path diversity for FAA communication sites in remote or rough terrain areas or on islands remote from CONUS FAA sites. Alaska, Hawaii, Guam, Puerto Rico, and the Virgin Islands all benefit from satellite links with CONUS FAA sites and other islands. More satellite links can be added as required with consideration of specific features of each satellite system, including area coverage, transponder capacity, and built-in transmission delays from earth-satellite-earth paths, etc.

a. Alaskan NAS Interfacility Communications System (ANICS). ANICS is a satellite network that provides telecommunication links not previously available in Alaska, commercially or geographically. COTS satellite earth stations and equipment are being utilized in the voice and data Alaskan network. The ANICS network is planned to contain four network hubs and 120 remote satellite earth stations with access to four leased transponders on two satellites. A network monitoring and control system provides the capability to reroute circuits and monitor circuit quality. The network control center is in the Anchorage ARTCC and an ANICS installation in Seattle provides the CONUS link.

b. FAA Telecommunications Satellite (FAATSAT) Network. The FAATSAT network is a leased service which provides cost effective reliable interfacility communications without installing new terrestrial landlines. FAATSAT can improve link availability and quality, especially for islands such as Hawaii, Guam, Puerto Rico, and the Virgin Islands, and for some mainland FAA sites. Added link diversity also reduces opportunities for single points of failure. FAATSAT accommodates large bandwidth, high capacity transmissions required by the weather and radar processor (WARP) for integrated terminal weather system (ITWS) programs and for broadcast weather data. This network also provides a small number of en route radar data circuits and A/G voice circuits. Both transportable and FAA owned portable earth stations can be used for temporary service requirements and disaster recovery.

30. BACKUP EMERGENCY COMMUNICATIONS (BUEC). A BUEC A/G radio channel is used as a backup A/G channel between an aircraft and a controller when the primary A/G channel containing both main and standby radio equipment is unusable or unintelligible. BUEC A/G radio equipment can be located at an ARTCC, VOR, RCL, or other remote site, but not at an RCAG. BUEC collocation with an ARSR is not recommended because RFI from the radar signal causes poor reception. A BUEC site provides backup A/G coverage for an ARTCC sector frequency at a location diverse from the channel RCAG. Either a BUEC channel or a primary A/G channel is selected by the controller at the ATC position console. Figure 2-4, *ARTCC A/G Communication System Redundancy,* shows various types of path redundancy used to provide reliable A/G communication channels.

a. BUEC Transceivers. BUEC VHF and UHF transceivers are part of an older frequency agile backup A/G channel system. Now each BUEC A/G transceiver is operated on a fixed sector frequency through a VSCS, but requires an old BUEC system priority module for the VHF (or UHF) transceiver and an old BUEC processor to complete the backup A/G channel. When the controller selects a BUEC transceiver channel now, its priority module is set to priority level zero, and pulses created by that setting are counted by the VSCS to activate the BUEC channel.

b. S-BUEC Transmitter/Receiver Pairs. Sustaining BUEC (S-BUEC) transmitter/receiver pairs are identical to primary A/G channel fixed-tuned transmitter/receiver pairs. Each BUEC transmitter has a cavity filter tuned to the primary VHF (or UHF) sector frequency for which it is a dedicated backup. If relocation of a BUEC site is necessary, each new BUEC site shall be located to prevent the BUEC RF from causing or being affected by RFI. From each AT controller position,

FIGURE 2-4. ARTCC A/G COMMUNICATION SYSTEM REDUNDANCY

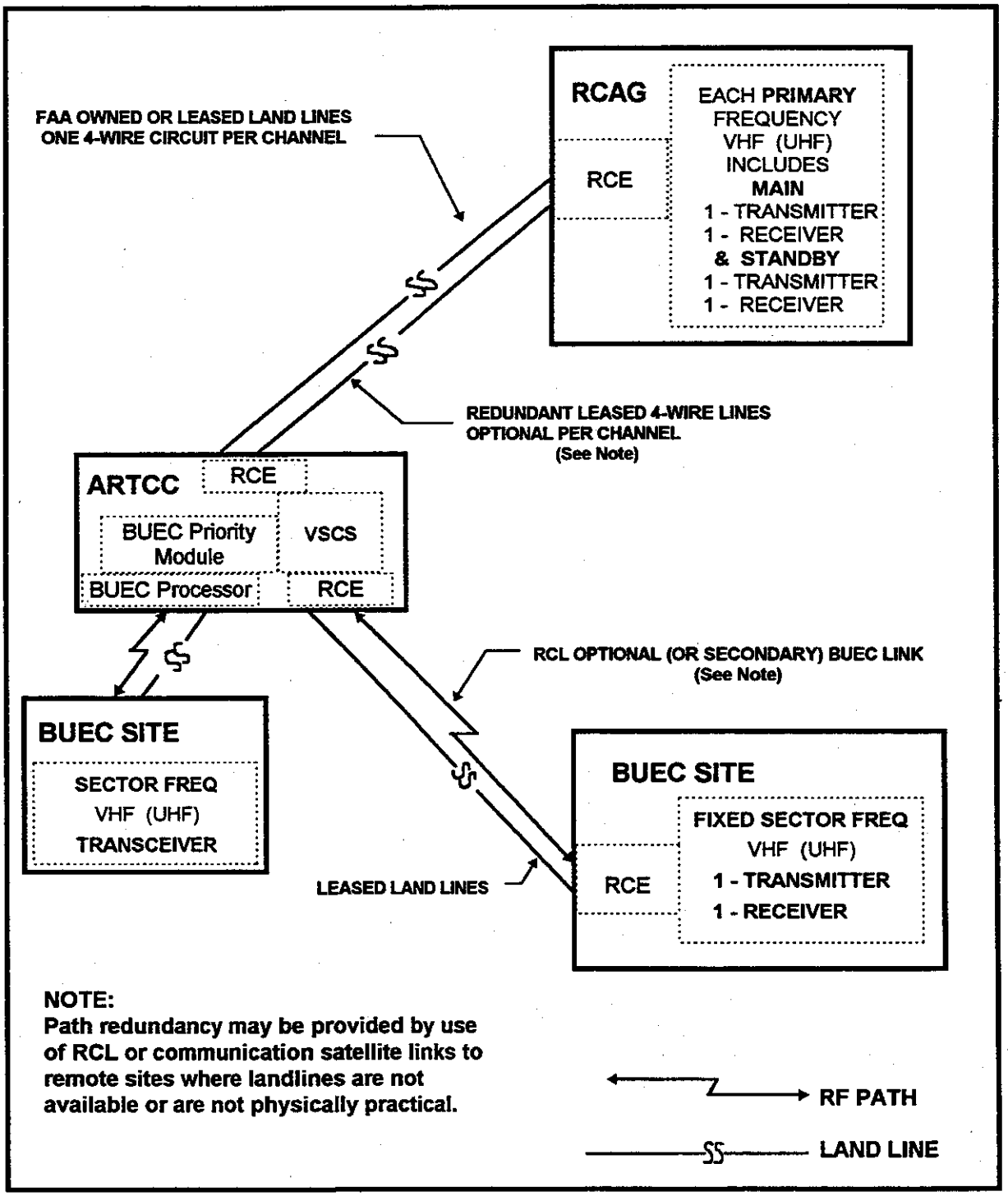

selection and control of S-BUEC radios is through the VSCS and RCE, the same as for a primary A/G channel.

31. VOICE RECORDERS. Voice recorders document all AT controller and pilot voice communications to provide required legal records. ATC recorded voice communications are reviewed in the event of an aircraft accident or incident and also are used for improving controller voice communication techniques. Voice traffic to and from each ATC position is recorded in an assigned data storage channel or file and is referenced to the exact time of day. ARTCCs use multichannel dual tape transport recorders and newer digital voice recorders, all with automatic changeover for continuous operation.

a. Magnasync HCVR Tape Transport. Tape transports used in ARTCCs are Magnasync High Capacity Voice Recorders (HCVR) which use 1 inch magnetic tape. These HCVR tape transports are microprocessor controlled. Three 21 track recording heads provide 60 data channel capacity. Fail-safe signals are multiplexed with the voice data.

b. Digital Voice Recorder System (DVRS). The Denro DVRS is a computerized voice recorder system which utilize Digital Recording Units (DRU) made by Nice Systems, Inc. The system records multiple voice channels on a computer hard disk drive, stores the same data files on 4 mm digital audio tape (DAT) in a cassette, and provides instant playback from disk. Each DRU is connected to the DVRS workstation and is configurable to 48 data storage channels in 16 channel increments. A single DVRS workstation can control multiple DRUs networked via an ethernet hub to provide up to 1200 data storage channels as specified.

32. RF COMMUNICATIONS EQUIPMENT. Some RF communications equipment is located at each ARTCC. RF communication equipment at ARTCCs can include ATC international emergency frequency, local primary, or BUEC channel radios and their antenna systems. Each ARTCC also contains RCL RF equipment for ATC microwave links to RCL equipped primary A/G or BUEC A/G remote sites. An ARTCC may contain LDRCL RF equipment to link the ARTCC to an isolated site. In addition at each ARTCC, an HF NARACS terminal and RF equipment, to link the ARTCC to similarly equipped FAA or DoD sites, is maintained ready to provide emergency communications to aid recovery during a national, regional, or local disaster. Other NARACS disaster recovery equipment kept ready at ARTCCs includes portable VHF/FM transceivers, which also can be used to support emergency investigations of aviation crashes or incidents.

a. Equipment Types. All RF equipment systems consist of transmitters, receivers, antennas, and any special equipment or

devices in the antenna system coaxial transmission lines between A/G radios and antennas. Special equipment inserted in the coaxial lines may include combiners, multicouplers, RF bodies, circulators, filters, coaxial relays, amplifiers, or attenuators. If remote or coastal en route transmitters need 50 watt or higher power amplifiers to reach aircraft near sector boundaries or in oceanic regions, a waiver is required before such amplified power may be transmitted.

b. Usage. The reliability of a primary A/G channel is increased by providing completely redundant communication paths from the ARTCC to primary A/G channel M/S radio equipment. At an ARTCC, local international emergency frequency M/S A/G radio installations do not use off-site transmission lines but have redundant RF paths and antennas on site. BUEC A/G radio installations provide a backup A/G channel for each sector frequency in use to add redundancy for when a sector primary M/S channel is unusable. A BUEC channel does not have redundant A/G radio equipment and may not be required to have path redundancy, although path redundancy is recommended.

33.-40. RESERVED.

CHAPTER 3. MANAGEMENT OF EN ROUTE FACILITIES

SECTION 1. ADMINISTRATIVE

41. GENERAL. Normal administration of en route facilities is addressed in FAA Order 7210.3K, *Facility Operation and Administration*. However, a variety of administrative tasks must be accomplished before the installation of or an addition to an en route facility can take place. These tasks may involve land acquisition, funding, filing of environmental impact statements (EIS), and securing permits to construct new sites or to modify existing sites. This handbook is concerned mainly with ARTCC site related tasks. RCAG administrative tasks are addressed in FAA Order 6580.3A for RCFs. Administrative tasks for an ancillary en route communications site not covered by a specific FAA order shall be in accord with this handbook or Order 6580.3A.

42. NOTICE TO AIRMEN (NOTAM). A NOTAM shall be issued to alert affected personnel that a significant change in the status of facility operation is in progress or is pending. Examples are described below.

a. Shutdown NOTAM. A shutdown NOTAM shall be issued in advance of shutdown of a commissioned facility undergoing extensive equipment changes, additions, or modernization. Normally, advance NOTAMs are issued by the ARTCC Operational Control Center (OCC) or Maintenance Control Center (MCC) through the appropriate AFSS/FSS. The OCC/MCC also can coordinate effectively with other groups as necessary. In special circumstances, a regional office may direct the OCC/MCC management authority to issue a shutdown NOTAM through an AFSS/FSS.

b. Return to Service NOTAM. A return to service NOTAM is issued by the OCC/MCC only after work done to an existing site is completed and the service performance is certified by Airway Facilities (AF) personnel. A Joint Acceptance Inspection (JAI) may be necessary before a return to service NOTAM can be issued.

c. Commissioning NOTAM. A commissioning NOTAM shall be issued by the regional office when a new facility is completed or significant changes made to an existing facility have been completed and approved. A successful JAI and service certification are required before a commissioning NOTAM can be issued.

43. PLANNING. Relocation of an entire ARTCC facility is unlikely, but renovation or expansion may be necessary. Advance thorough planning is essential for a successfully integrated completion. Any ongoing planning process must maintain safe and efficient airport and

airspace utilization. Also, site location for the establishment or relocation of an ARTCC air navigational aid must be approved by the appropriate regional offices (AF, AT, Flight Standards, and Airports.) Necessary approvals are obtained through a non rule making airspace study coordinated in accordance with FAA Order 7400.2D, *Procedures for Handling Airspace Matters,* as amended by specific regional guidance.

a. Land Acquisition. Additional land may be required for ARTCC expansion or collocation of an RCAG or other en route facility with an ARTCC. Land acquisition requires a legal description and plot of the entire site including access roads and utility easements. These documents and proof of conformance to zoning restrictions must be obtained prior to requesting acquisition of property rights. Transactions for acquiring property rights, whether for purchase, lease, or restricted use, are governed by the FAA Acquisition Management System (AMS), Section 3, *Procurement Policy,* Paragraph 3.12.1, *Real Property.* Additional information can be found on the Internet by accessing the FAA Acquisition System Toolset (FAST). Look under Procurement Toolbox, then Real Estate Guidance, and under Document for Viewing, select Land to find *Land Procurement Guidelines.* All transactions are handled by FAA Real Estate Office personnel.

b. Funding. Funds for land to be purchased for a new facility site shall be included in the region or center Facilities and Equipment (F&E) budget with the facility equipment and installation funds. The total land value includes an estimate of the value of the land rights to be acquired and acquisition costs plus 15 to 20 percent for contingency. Instructions for including land acquisition funds in the annual F&E budget submission are found in FAA Order 2500.35, *Call for Estimates - Facilities and Equipment,* which is updated annually.

c. Need to Acquire Determination. All possible sites found acceptable for efficient operation of the facility must be considered for use. However, before acquisition of new land is considered, a determination shall be made that requirements cannot be satisfied by use of property already held by the FAA, property available to other United States (US) Government agencies, public land, privately-owned property which can be obtained by exchange for US Government-owned property, or property in existing rights-of-way or easements if available at or below a nominal cost.

44. TASKS. The order in which tasks are performed is important to ensure conformance with all legalities. An orderly procedure also will facilitate a timely completion by avoiding unnecessary delays. The following tasks are not necessarily performed in the order listed.

a. Site Investigation. Prior to conducting investigations and tests on site, the legal right to enter and use the land shall be obtained in writing from the landlord. If applicable, the landlord's written permission shall include the right to clear or otherwise change the character of the land. When authorization is granted verbally, it shall be confirmed by a written authorization sent to the FAA representative with a return receipt. If a landowner will not grant a right of entry, a right of entry shall be obtained through the US courts. Local US attorneys should be consulted in such instances through FAA regional counsel. Contacts with landowners usually should be made by FAA real estate personnel. Contacts made by others shall be under direction of the FAA real estate office.

b. Environmental Assessment (EA). Before beginning negotiations for acquisition of land or construction or modification of a facility, an EA shall be completed as required by the National Environmental Policy Act (NEPA) and FAA Order 1050.1D, *Policies and Procedures for Considering Environmental Impacts*. The EA shall be followed by either a signed Categorical Exclusion (Cat-X), Finding of No Significant Impact (FONSI), or Environmental Impact Statement (EIS) and Record of Decision (ROD) before site acquisition or work begins. Copies of the EA, EIS/FONSI/Cat-X, and ROD shall be kept on file in the regional Real Estate Division Office and in engineering site files.

c. Land Office Survey. Landowners of all candidate sites shall be identified and addresses obtained through which landowners may be contacted. The legal description of land usually can be obtained locally from the city, township, or county clerk's office. Whenever possible, a copy of the deed(s) or other appropriate documentation showing land ownership should be attached to the site survey report. Land adjacent to the proposed site also may be affected by the site zoning restrictions. If the office survey determines that adjacent land is affected by site zoning restrictions, adjacent land ownership information also shall be included with the site survey report.

d. Temporary Agreement. After all site surveys are completed and it has been decided to field test a specific candidate site, a written temporary agreement shall be entered into with the property owner(s). This agreement (Permit to Test, Testing License, or other necessary agreement) will secure entry and access to the property for testing the site. Contact the regional real estate office of the Logistics Division for specific details concerning these agreements.

e. Zoning Restrictions. When the temporary agreement is secured, the landowner(s) must be made aware that zoning restrictions will be required if the site is selected for use. This will reduce the possibility of complications during lease negotiations.

f. Temporary Permits. Temporary permits to utilize access roads belonging to adjacent property owners also shall be obtained prior to site testing. An easement is often all that is required to install a permanent access road to a facility, making the purchase of land for this purpose unnecessary. Leases or other agreements, as required, should be entered into with appropriate governing agencies or property owners for the use of existing roads. The regional real estate office of the Logistics Division should be contacted for necessary procedures for entering into such agreements.

g. Environmental Due Diligence Audit (EDDA). Before acquiring or leasing a new land site or turning over a land site to the lessor or new owner, an EDDA shall be completed in accordance with FAA Order 1050.19, *Environmental Due Diligence Audits In the Conduct of FAA Real Property Transactions*. Copies of the EDDA shall be kept on file in the regional Real Estate Division Office and in engineering site files.

45.-50. RESERVED.

SECTION 2. CONFIGURATION MANAGEMENT (CM)

51. DOCUMENTATION. Identification and documentation requirements for contractor supplied hardware and software in FAA systems and facilities are described in FAA-STD-021a, *Configuration Management (Contractor Requirements)*. Configuration documentation is entered into the FAA configuration management (CM) system. CM shall be initiated at the beginning of the life cycle of the equipment and continue through all three phases, i.e. requirements determination, acquisition, and operational support. Both functional and physical characteristics shall be documented as a baseline for each configuration item (CI) identified in a new FAA subsystem, system, or facility. Documentation shall be updated promptly to reflect any changes made thereafter to baselined configurations.

a. Changes. CM provides a formal means by which to authorize and document changes in baselined equipment, systems, and facilities. Following set procedures to initiate and effect a change provides a uniform system for identification, coordination, approval, status accounting, and audits. CM encompasses and documents development, acquisition, implementation, modification, operation, and training for equipment, software, subsystems, systems, and facilities.

b. Contractor Requirements. CM practices and procedures to be followed by contractors to the FAA are established in FAA-STD-21a. Each contractor is required to use CM controls. A contractor's CM plan approach and outline of CM controls to be implemented shall be submitted to the FAA as part of the contractor's technical proposal or shortly after contract award. Each contractor CM plan is subject to approval by the procuring activity. Contractors shall impose requirements in FAA-STD-021a on any subcontractor, supplier, or vendor responsible for furnishing an item identified by the FAA as a CI.

52. MODIFICATIONS. Changes to or deviations from a documented configuration already implemented may be made by a contractor only after contractual authorization and concurrence with FAA National Engineering or the appropriate FAA AOS organization.

a. Engineering Change Proposal (ECP). Either a prime contractor or the FAA can initiate an ECP. An ECP proposes or requests specific changes to, a waiver in, or deviation from a documented configuration of items developed, designed, or modified for the FAA. A contractor shall not incorporate any engineering change, deviation, or waiver in a configuration prescribed by the contract without the approval of contractual authorization. Content and processing of an ECP is described in FAA-STD-021a.

b. NAS Change Proposal (NCP). An NCP is initiated by the FAA to propose changes to a commissioned system/equipment or to establish a baseline for a NAS system or subsystem, including the associated documentation. A case file/NCP containing system or subsystem baseline or change information shall be submitted on FAA Form 1800-2 for approval of NAS Configuration Control Boards (CCB) and entry into the FAA Master Configuration Index (MCI). An automated subsystem baseline configuration and documentation listing, NAS-MD-001, contains guidelines for case file/NCP submission.

c. Electronic Equipment Modification (EEM). An EEM is authorized by AOS which controls all modifications to NAS equipment that is under configuration management and/or that has been commissioned. An NCP issued by the implementation program office or any other NAS organization office can initiate an EEM for equipment purchased and accepted from a vendor.

d. Site Bulletins. Site Technical Bulletins (STB) or Site Program Bulletins (SPB) may be issued on already commissioned or baselined systems through coordination and concurrence with the appropriate AOS authority. Either kind of site bulletin may be initiated by an NCP to alert personnel to pertinent changes or new information.

e. IRD/ICD. An Interface Requirements Document (IRD) is prepared by the FAA to specify requirements for a subsystem or equipment item to be compatible with existing system items and to ensure agreement by all affected FAA project offices. The IRD also includes information on floor space and power requirements to be provided by the facility for the equipment. An Interface Control Document (ICD) is developed by the FAA to identify, quantify, and control design characteristics and specifications of the interface in preparation for national procurement. An Interface Revision (IR) is used to revise an IRD or ICD. Formats and content requirements for IRD, ICD, and IR preparation are given in FAA-STD-025b, *Preparation of Interface Documentation*.

f. As-Built Drawings. As-built drawings shall be approved by the appropriate NAS CCBs. As-built drawings prepared for or used by the FAA shall follow conventions outlined in FAA-STD 002c, *Facilities Engineering Drawing Preparation*. Red-lined drawings from which drawings were revised are retained by the FAA regional offices.

53.-58. RESERVED.

SECTION 3. HUMAN FACTORS ENGINEERING

59. ENVIRONMENTAL. Concurrent with initial planning, facilities shall conduct and document a preliminary environmental review of proposed new or revised FAA actions as specified in Order 1050.1D, *Policies and Procedures for Considering Environmental Impacts*. The review requires documentation of possible impacts on noise, land, air, and water; effects on wetlands, coastal zones, historic or archeological sites, and endangered species; and any foreseeable controversies. The effect on a noise sensitive area is determined using procedures in the Office of Environment and Energy document *Calculations of Maximum A-Weighted Sound Levels Resulting from Civil Aircraft Operations*. If the preliminary environmental review indicates that an EIS or a FONSI is required, procedures in the latest revision of Order 1050.1D shall be followed. If no further action is required, the review documentation shall be retained in the facility.

60. WEIGHT. Existing raised floors in ARTCCs are designed to hold 150 lb/sq ft. Normal concrete slab floors are designed to support 300 lb/sq ft. Loading between 150 and 300 lb/sq ft shall be mounted directly on the slab floor or on a special frame capable of supporting the required weight. The frame can extend up from the slab through the raised floor. A load in excess of 300 lb/sq ft shall be mounted on a specially designed concrete slab base or shall be mounted to distribute its weight over an area large enough to reduce the loading to within the existing floor loading limit and ensure a stable base for equipment and personnel.

61. REACH. The human-machine interface must be considered carefully to prevent error-inducing possibilities from being introduced into the system. Manual control mechanisms shall be within easy reach without being subject to accidental activation, deactivation, or interference. It is essential that all positions be provided with adequate and conveniently usable work space to promote error-free human operations.

62. DISPLAY AREA. Each visual display shall be positioned to be easily visible to a user without any blockage, interference, or distortion. All displays in a user area shall be within the user's field of vision without strain and shall be visible without user blockage during normal operation of manual controls. Also, the arrangement of the consoles throughout the operations room shall be considered on the basis of logical work flow and aircraft hand off from one controller to another. Close coordination with AT division is essential.

63. SAFETY. Occupational safety and health hazard factors shall be considered in the design and installation of equipment. Factors may include equipment guards, lockout/tagout, clear aisle space, electrical equipment clearances, overhead walkway toe boards, hand rails, stair clearances, safety cages, safety climb devices, confined spaces, radiation shielding, noise dampening, material safety data sheets, asbestos and lead paint protection, hazardous material control, etc. Guidance in FAA Order 3900.19A and any other hazard specific FAA orders must be followed. A partial list of relevant FAA orders is given below for reference.

FAA Order No.	**Title**
1050.15A	Fuel Storage Tanks At FAA Facilities
1050.17	AF Environmental & Safety Compliance Program
1050.20	AF Asbestos Control
3900.6A	Occupational Safety Program for AF Personnel
3900.19A	Occupational Safety and Health
3900.49	Lockout/Tagout Procedures
3910.2A	Occupational Health Programs
3910.3A	Radiation Health Hazard and Protection
3910.4	Hearing Conservation
3910.5	Asbestos Control

64. SECURITY. Security can be provided for a communication system in an ARTCC by use of authorized passwords to access the operating system or system management function. For example, both the VSCS and the RCL ANMS Advanced Computer Resource Nucleus (ACORN) system utilize this type of security.

65.-68. RESERVED.

SECTION 4. TECHNICAL

69. GENERAL. An ARTCC may be a stand-alone facility or may host an RCAG facility, BUEC installation, and/or an RCL. Radar and beacon installations are normally located remote from AT controller A/G communications equipment. Important attributes to consider when selecting an en route facility site or expansion area are the surrounding topography, ground conductivity, potential RFI in or expected to be introduced into the area, and the normal and extreme amounts of ambient electrical noise present at the site. Each en route facility site must be capable of transmitting and receiving usable signals within its service volume area. Since site conditions may have an adverse impact upon the performance of NAVAID, radar, host facility, or A/G communications equipment, coordination is required between program managers of any collocated facilities or co-sites.

70. DESIGN CONSIDERATIONS. Of primary concern in siting an en route facility is the potential for introducing excessive interference into the environment of the proposed site. During the selection process, if interference present at the site exceeds or if potential generation of interference at or near the site would exceed maximum allowable levels, the site shall be removed from the candidate list.

a. Electromagnetic Interference (EMI). EMI is the result of undesired electromagnetic fields interfering with and degrading a desired signal. FM signals, poor or incomplete shielding of electronic equipment, power lines, industrial heaters, welding equipment, and electronic door openers can produce interfering fields. Emission levels from electronic equipment, radio and TV equipment connected by any means to an antenna, and signal producing equipment located in the vicinity of an antenna site are regulated by the Federal Communications Commission (FCC). The limits and rules for EMI are given in Federal Code of Regulations (FCR) 47, Part 15. Each FAA Regional Spectrum Management Office reviews all commercial requests to install RF emitting equipment in proximity to any FAA facility in the region and coordinates FAA selection or use of frequencies.

b. Electromagnetic Compatibility (EMC). Equipment must be designed for EMC to allow various types of equipment to operate in the same electromagnetic environment at their own design levels of efficiency. Licensed radio equipment that operates in any government, commercial, or public safety frequency band shall be engineered and installed to limit any radio interference affecting a nearby antenna site. The maximum allowable undesired signal level from a licensed transmitter is -104 dBm measured at the input of any A/G receiver at an FAA site. This level applies to signals within the 118-137 MHz

band for VHF receivers and within the 225-400 MHz band for UHF receivers. The maximum allowable level is -45 dBm for all undesired signals outside the A/G communications RF bands.

(1) RF Interference (RFI). RFI is caused by radiated spurious signals or random ambient acoustic noise present in a desired frequency band. Spurious signals can include harmonics of transmitted signals, reflected multipath out-of-phase signals, signals transmitted on identical frequencies by cosites located too close together for the transmit power levels, and in-band signals from any undesired source.

(a) Intermodulation (IM). Harmonics are duplicated transmit signals produced in upper and lower sidebands at multiples of the carrier frequency. The third, fifth, and seventh harmonics in both sidebands are most likely to combine with other signals present. They can add or subtract with the other frequencies and modulation to produce unwanted in-band signals known as IM interference.

(b) Receiver Desensitization. Nonlinearities in a transmitter can produce spurious signals which are transmitted with the desired signal. If a transmitter emits a spurious signal within the frequency band of a collocated receiver, the receiver may be "desensitized" by the undesired signal. The spurious signal increases the total power input to the receiver and adds as noise with the desired signal. Any resulting degradation in signal to noise ratio (S/N) then may prevent the receiver from selecting only the desired signal from the total in-band power received. Degradation of receiver performance in this way is called receiver desensitization.

(2) Electrical Noise. Electrical noise originates in dissipative materials. It consists of thermal and shot noise randomly produced by energy transfers in active devices such as diodes and transistors. Thermal noise is caused by resistance to electron movement as the electrons move to equalize the device temperature. Shot noise is a product of variations in current flow through a device. Electrical noise can degrade the performance of a device and thus the performance of the equipment containing the device. Pre-selector switches, switching power supplies, and active filters are among possible sources of electrical noise. Equipment containing active devices must be selected carefully so that the noise criteria for a connected transmitter or receiver is not exceeded.

c. Siting Criteria. A primary consideration in selecting a site location is the need to provide communications coverage for the entire en route area of responsibility. Siting for RCAGs is addressed in Order 6580.3A. An ARTCC site needs sufficient power, access, and

capabilities for telephone and microwave, HF, VHF, and UHF A/G communications. Surrounding terrain, ground conductivity, ambient RF noise level, and potential RFI must be examined for any possible adverse effects on ARTCC operations.

(1) Surrounding Terrain. Topography near the site should not limit radio line of sight (RLOS) between antennas. Both terrain and type of ground must be considered.

(a) Atmospheric Refraction. Line of sight (LOS), although desirable, is not always necessary for UHF and VHF signals traveling through air close to the earth. Atmospheric refraction of signals must be considered, along with terrain, to provide low angle communications with antennas at low altitudes and at maximum range. The refractive index of the earth's atmosphere decreases with height above sea level, except during certain weather conditions. A larger refractive index near the earth slows the velocity of radio signals near the ground and bends them from a straight path to travel beyond the geometrical horizon. Approximate RLOS over smooth earth is computed by the expression $d = (3Kh/2)^{1/2}$ where d = distance to the radio horizon (RLOS) in miles, h = antenna height in feet above the earth, and K = ratio of the effective to true radius of the earth. Figure 3-1, *Nomogram for Radio Horizon (RLOS)*, assumes K = 1.33 and that RLOS in miles is less than $(2h_{tx})^{1/2} + (2h_{rx})^{1/2}$ in feet.

(b) Ground Reflections. Vertically polarized signals reflecting off the earth vary in amplitude and phase angle, depending upon the angle of incidence with the earth and the ground reflection coefficient at the point of contact with the earth. For horizontally polarized signals, the reflected signal is approximately equal to, but is 180 degrees out of phase with, the incident (arriving) signal. A ground reflected signal arriving at a receiving antenna at the same time as a direct airborne signal can cause antenna distortion. Figure 3-2, *Interfering Ground Reflected and Direct Signal Paths*, shows a direct signal arriving simultaneously with a ground reflection at a receiving antenna and possibly causing distortion. Figure 3-3, *Typical Ground Reflection Coefficients for Horizontal and Vertical Polarization*, contains a graph indicating that amplitude and phase of ground reflection coefficients can cause more complicated and severe effects with vertically polarized than horizontally polarized signals.

(2) Ground Conductivity. Good ground conductivity assists low altitude RF coverage at great distances from a site. Soil conductivity of 0.01 to 0.02 mho per meter, at a distance of three to five wavelengths surrounding a site, is considered good. Ground conductivity values for various types of soil and water are listed in

FIGURE 3-1. NOMOGRAM FOR RADIO HORIZON (RLOS)

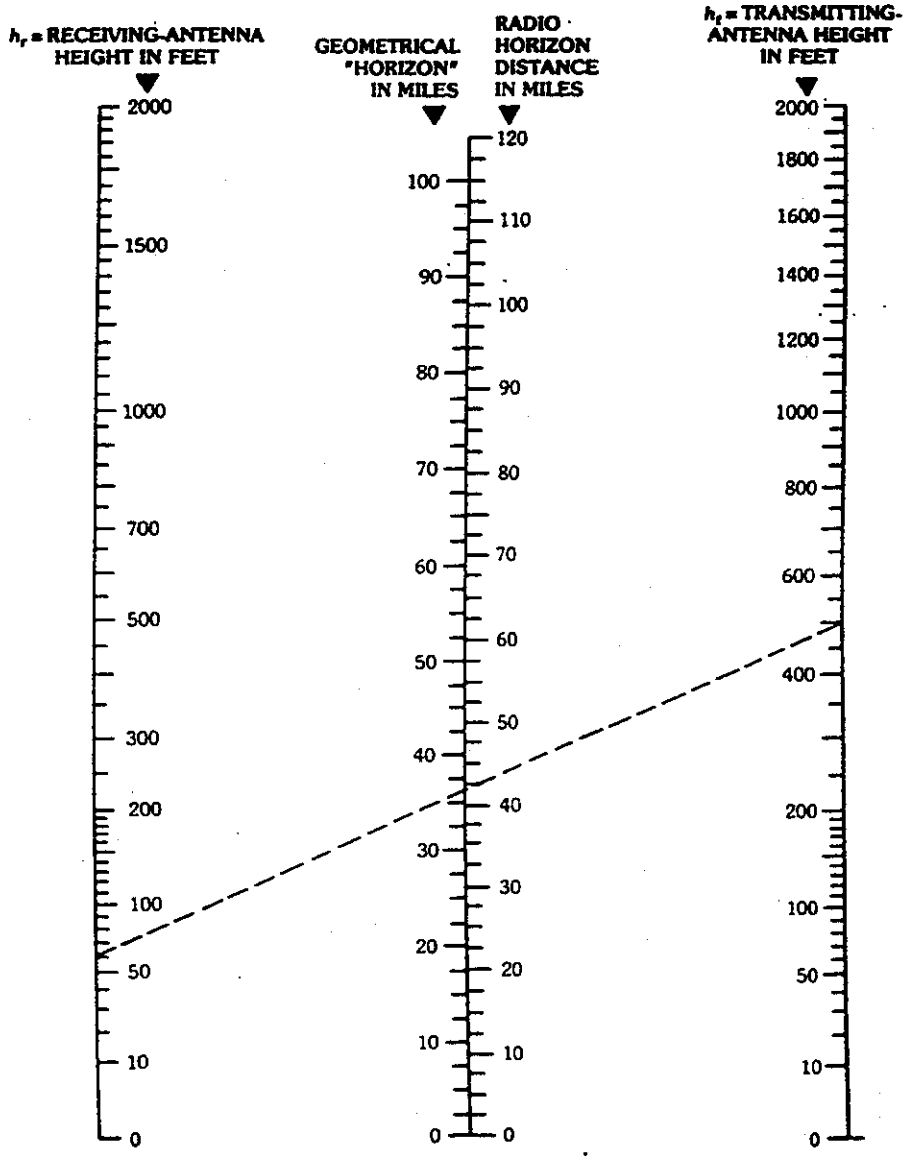

THE NOMOGRAM GIVES RADIO HORIZON DISTANCE (RLOS) IN MILES WHEN h_r AND h_t ARE KNOWN.

FOR EXAMPLE SHOWN:

HEIGHT OF RECEIVING ANTENNA	h_r = 60 FEET
HEIGHT OF TRANSMITTING ANTENNA	h_t = 500 FEET
MAXIMUM RADIO PATH LENGTH	RLOS = 41.5 MILES

FOR: EFFECTIVE/TRUE EARTH RADIUS K = 1.33

WHERE RLOS (in miles) < $\sqrt{2h_t} + \sqrt{2h_r}$ (in feet)

FIGURE 3-2. INTERFERING GROUND REFLECTED AND DIRECT SIGNAL PATHS

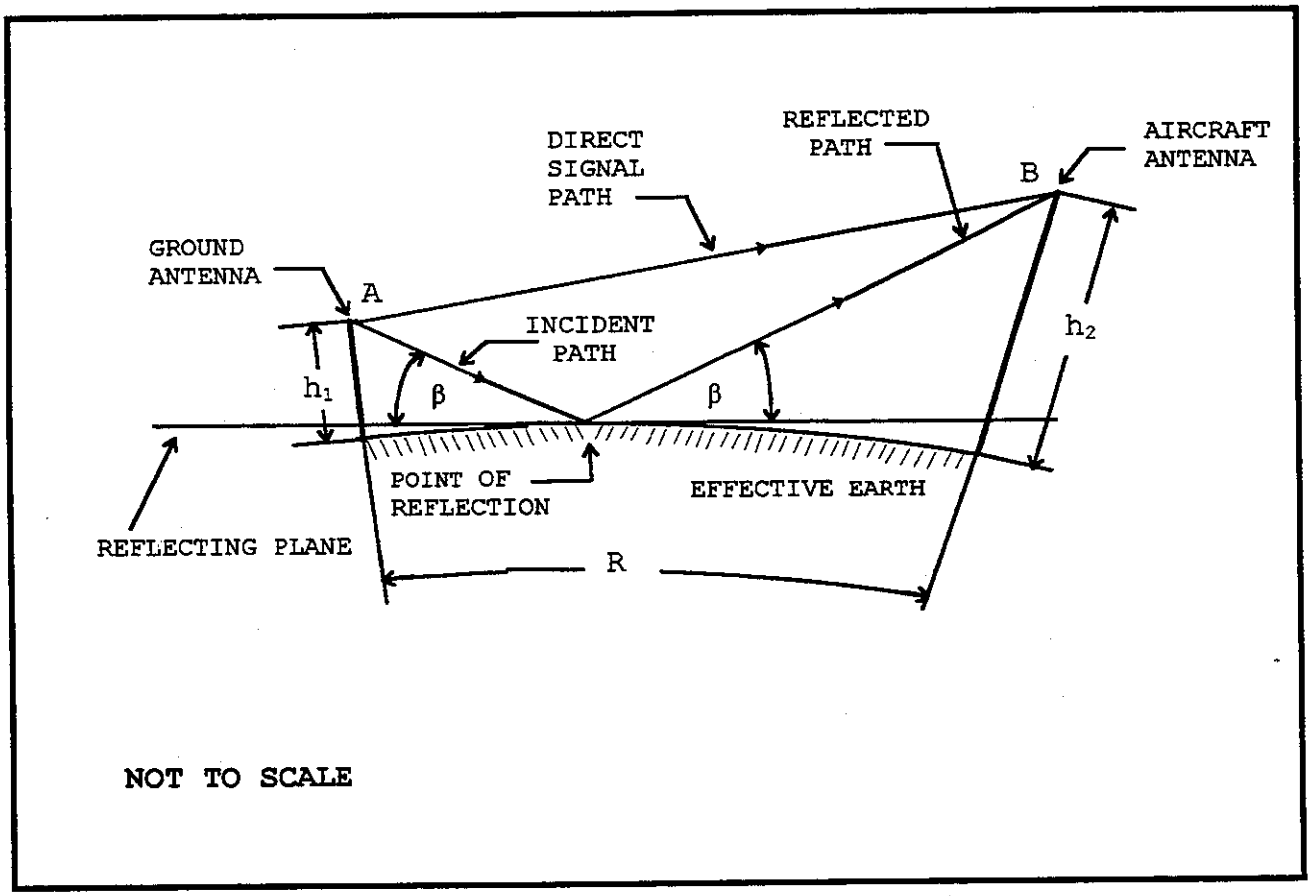

FIGURE 3-3. TYPICAL GROUND REFLECTION COEFFICIENTS FOR HORIZONTAL AND VERTICAL POLARIZATION

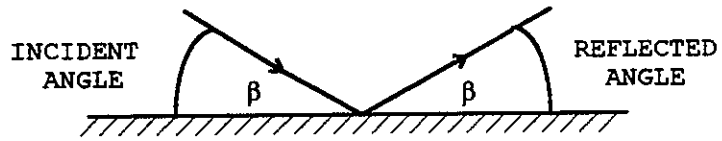

a. VERTICAL ANGLE β MEASURED FROM FLAT GROUND WHERE INCIDENT = REFLECTED

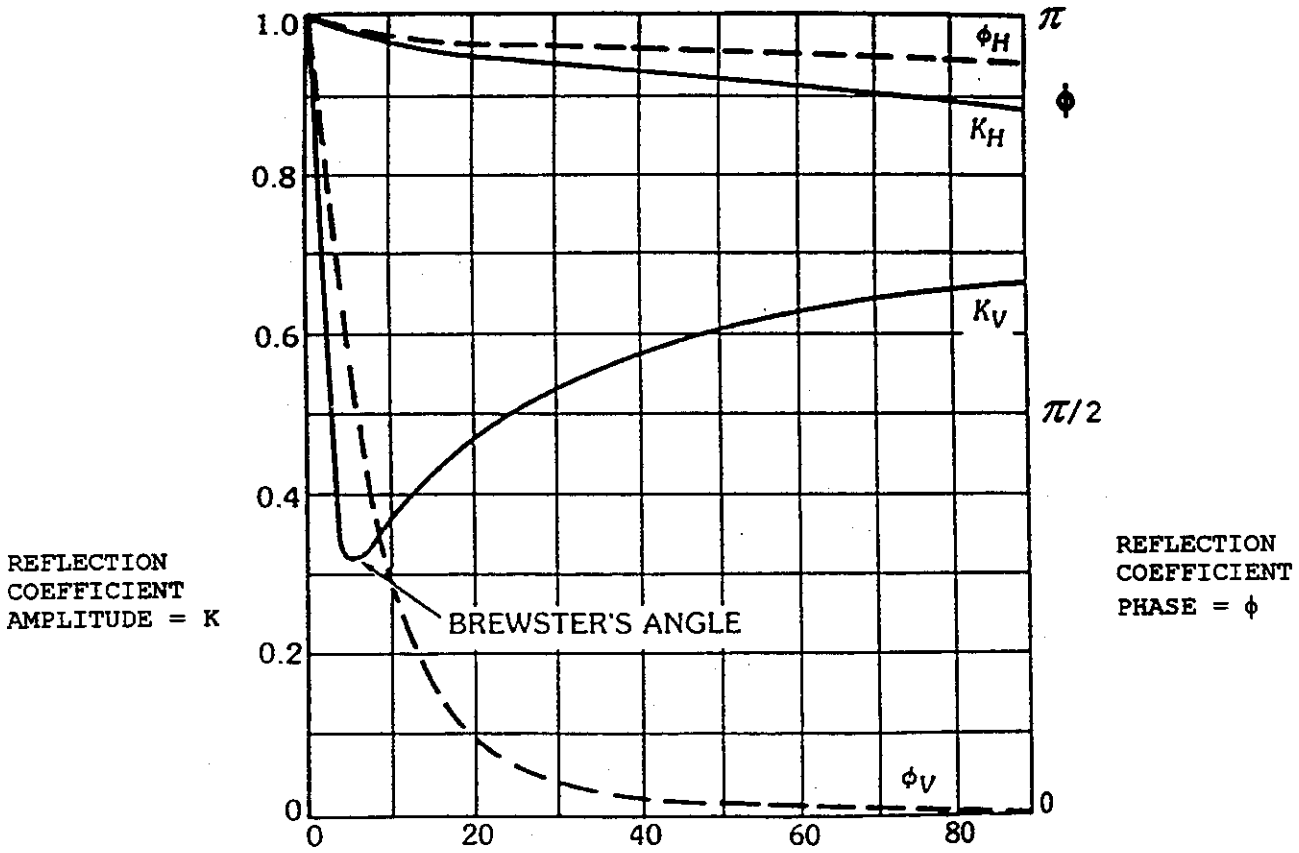

b. VERTICAL ANGLE β IN DEGREES FOR BOTH HORIZONTAL AND VERTICAL POLARIZATION

Table 3-1, *Typical Electrical Parameters for Earth and Water*. Section 7 in Chapter 4 provides soil resistivity testing methods. A ground conductor array can be installed to provide a better ground plane if ground conductivity must be improved. Also, adding moisture retaining plants and shrubs near the site may improve ground conductivity by increasing the moisture content of the soil. These plantings may be used if ground conductivity is only marginally low. Refer to Section 2 of Chapter 4 for other guidance on soil resistivity enhancement to improve soil conductivity.

(3) Ambient RF Noise. All HF, VHF, UHF, and microwave frequency bands used by the FAA are in heavily used portions of the radio spectrum. This frequency congestion coupled with atmospheric and manmade noise contributes to the ambient noise level at each FAA site. Typical ambient RF noise levels between 100 kHz and 10 Gigahertz (GHz) are shown below in Figure 3-4, *Typical Average Ambient Noise Level*. A noisy RF environment can reduce the effective range of a receiver by masking the desired signals. A receiver squelch threshold must be set higher than the ambient RF noise level to function effectively. Therefore, the higher the ambient RF noise level, the higher a squelch threshold must be set and the stronger the desired signal must be to be detected and received clearly. An evaluation of the RF noise level at a prospective site should be done prior to site selection.

FIGURE 3-4. TYPICAL AVERAGE AMBIENT NOISE LEVEL

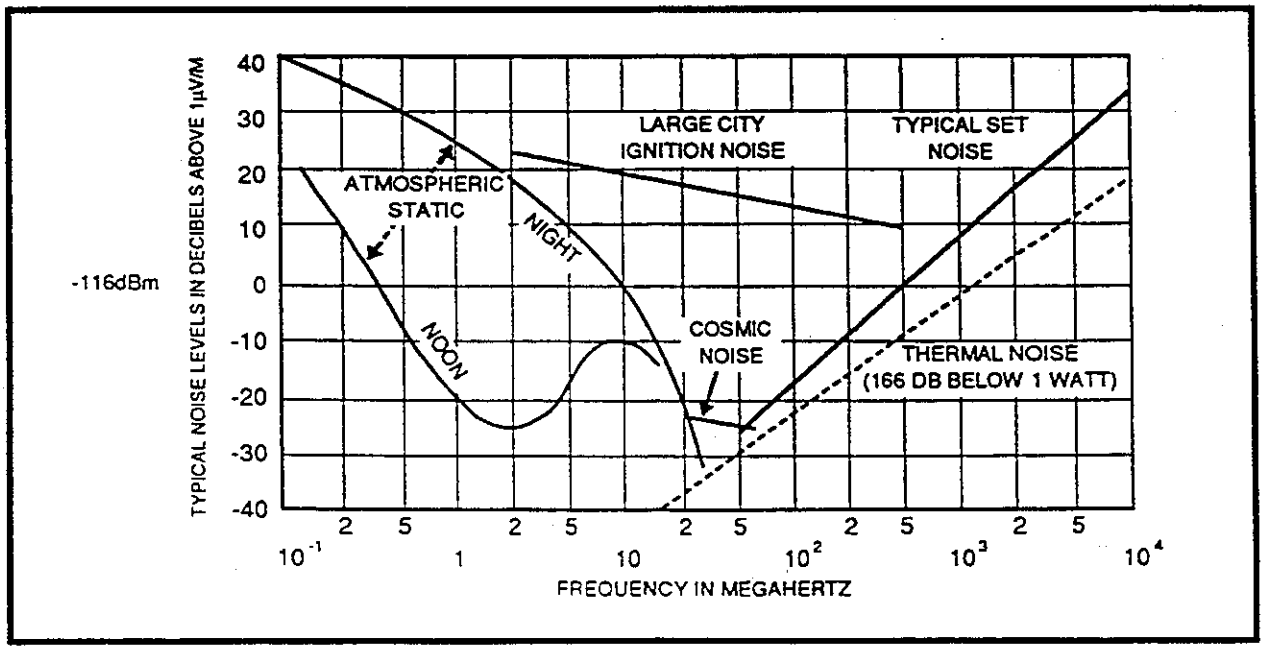

TABLE 3-1. TYPICAL ELECTRICAL PARAMETERS FOR EARTH AND WATER

Earth Type	Conductivity σ (mho/meter)	Permittivity ε (esu)
Poor	0.001	4.0 to 5.0
Moderate	0.003	4.0
Fair	0.01	15
Average	0.005 to 0.03	10 to 15
Good	0.01 to 0.02	4.0 to 30
Dry	0.00001 to 0.001	2.0 to 5.0
Land	0.002	15
Desert	0.01	3.0
Dry, Sandy, Flat-Typical Coastal	0.002	10
Flat, Wet Coastal Region	0.01 to 0.02	4.0 to 30
Dry Sandy Soils	0.001	10
Pastoral Land	0.005	15
Pastoral Hills, Rich Soil	0.003 to 0.01	14 to 20
Pastoral Medium Hills & Forest	0.004 to 0.006	13
Fertile Soil	0.002	10
Rich Agri. Land (Low Hills)	0.01	15
Rocky Land (Steep Hills)	0.002	10 to 15
Highly Moist Soil	0.005 to 0.02	30
Wet Soil	0.001 to 0.1	5.0 to 30
Marshy Soil	0.1	30
Marshy, Flat (Dense Woods)	0.0075	12
Marshy, Forested, Flat	0.008	12
Low Hills w/Unforested Rich Soil	0.01 to 0.02	4.0 to 30
Mountainous, Hilly (~1000 Meters)	0.001	5.0
Urban Industrial (Avg. Attenuation)	0.001	5.0
Urban Industrial (Max. Attenuation)	0.0004	3.0
Urban Industrial	0.0001	3.0
Fresh Water	0.001 to 0.01	80 to 81
Fresh Water(10°C at 100.0 MHz)	0.001 to 0.01	84
Fresh Water(20°C at 100.0 MHz)	0.001 to 0.01	80
Sea Water	3.0 to 5.0	80 to 81
Sea Water(10°C at Up to 1.0 GHz)	4.0 to 5.0	80
Sea Water(20°C at Up to 1.0 GHz)	4.0 to 5.0	73
Sea Ice	0.001	4.0
Polar Ice	0.000025	3.0
Polar Ice Cap	0.0001	1.0
Arctic Land	0.0005	3.0 to 5.0

71. INSTALLATION. Installation of equipment or modification of the facility at an ARTCC can involve more than one equipment area under configuration control. Such projects are the responsibility of designated FAA configuration management (CM) coordinators and their installation teams. On-site responsibilities for the pre-installation, installation, checkout, verification, and acceptance of the facility or equipment are divided among CM groups. The ARTCC project coordinator may be the Regional Associate Program Manager (RAPM), a designated coordinator from NAS Implementation (ANI) or a System Management Office (SMO), an ARTCC AF team leader, or a specific contractor. The project coordinator directs the ARTCC installation in accordance with the regional work order and gives special attention to compliance with any hazardous material handling requirements and with applicable safety requirements.

a. Washington Office ARTCC Project Management. The Washington office provides project management for implementations in functional areas that are under specific configuration control at an ARTCC. Areas under configuration control to achieve more standardization in order to enhance NAS capabilities are automation, communications, facilities, navigation, surveillance, weather, and environmental. Project managers of specific CM areas are responsible for oversight planning for the facility and equipment. Responsibilities include planning and funding of programs; development of program plans, site requirements, and installation standards; coordination of regional planning and project plans with national programs; and initiation of procurement requests for any national equipment procurements.

b. Regional ARTCC Project Coordinator. A regional ARTCC project coordinator is responsible for management of any ARTCC programs that affect that FAA region. From ANI, either one or more RAPMs, an engineering group, or a single engineer or else someone from another AF group or an SMO may be assigned to coordinate several projects that affect installation at an ARTCC. The projects may include initiation of regional actions to implement one or more ARTCC programs, development of site planning, and coordination of program materiel. Regional coordinators also have the following responsibilities.

(1) Site preparation prior to arrival of installation crews.

(2) Pre-installation testing and verification of existing equipment.

(3) Completion of all pre-installation tasks.

(4) Assistance to the Technical Officer Representative (TOR) and contractor or FAA installation team.

(5) Joint Acceptance Inspection (JAI).

(6) Local procurements.

c. System Management Office (SMO). An SMO provides personnel and equipment under the guidance of the FAA installation team leader who is acting for the Technical Officer Representative (TOR). The following tasks are supported by the SMO.

(1) Facility shutdown.

(2) Facility return to service or commissioning.

d. Technical Officer Representative (TOR). The TOR coordinates the on-site contractor installation process and is responsible for ensuring successful completion of tasks. Duties include verification of pre-installation preparation, proper installation, and checkout of ARTCC equipment before acceptance of the installation. The TOR shall maintain a site log of the installation history. This log includes daily entries for arrival/departure time of contractor personnel and all problems concerning installation, configuration, administration, and management during the project. This log can be used to cross-check and verify the contractor's log. The TOR shall ensure that each contractor performs tasks (1) through (4) listed below and provides assistance for the contractor by ensuring items (5) and (6) below.. In addition, the TOR shall complete all necessary forms and records required for facility commissioning or return to service.

(1) Establish and maintain a contractor site log.

(2) Verify and update equipment configuration data.

(3) Install, adjust, and align equipment in accordance with FAA approved technical instruction manuals.

(4) Conduct acceptance tests, Contractor Acceptance Inspections (CAI), and JAI in accordance with FAA instructions.

(5) Access to the site is available to the contractor.

(6) Necessary equipment is available to the contractor.

e. Installation Team Leader. The installation team leader is the FAA installation team coordinator for the on-site installation process. It is the responsibility of the team leader to verify proper pre-installation preparation and validate installation, checkout, and preparation for acceptance of the ARTCC equipment and installation. The team leader's duties support the similar duties of the TOR. Supervision by the team leader is limited to the FAA installation team.

f. Installation Team. The installation team is responsible for installation of new equipment in accordance with the instructions of the work order. The installation team is also responsible for the removal and proper packaging for shipment of any old equipment removed during the installation process. Additional duties include the following:

(1) Establish and maintain regional documentation.

(2) Verify configuration and individual serial numbers of all equipment.

(3) Assist in conducting acceptance tests and log results in accordance with FAA approved methods.

72. TESTING AND EVALUATION. Final testing, evaluation, and acceptance shall be accomplished in accordance with Order 6030.45, *Facility Reference Data File*, which describes the CAI and JAI. FAA Form 6030-17, Technical Reference Data Record, shall be used to record test data. The contractor is obligated to correct all discrepancies found during the CAI. The contractor is under no further obligation after the JAI is accepted by the FAA. A separate list shall be kept of all JAI checklist exceptions, including the status of each exception. The regional office is responsible for the planning and monitoring of this effort. Further details on testing and evaluation of installations is found in Chapter 7, *System Test and Acceptance*.

73.-80. RESERVED.

CHAPTER 4. GROUNDING AND LIGHTNING PROTECTION

SECTION 1. GENERAL REQUIREMENTS

81. GROUNDING SYSTEMS. Four separate grounding systems are essential for correct signal references, equipment performance, personnel safety, and protection of buildings and equipment. Figure 4-1, *ARTCC Ground Systems - Terminating Wire Sizes Recommended*, indicates site equipment and structure which must be protected by the lightning protection, AC power protection, multipoint, and single point ground systems, all of which terminate finally on the ARTCC perimeter earth electrode system (EES). For each specific ground system, the final terminating wire size shall be adequate to provide the lowest impedance path to earth for that ground system. ARTCC facilities shall comply with grounding and lightning protection standards in this handbook and at least the minimum grounding and lightning protection requirements in FAA-STD-019, *Lightning Protection, Grounding, Bonding and Shielding Requirements for Facilities and Electronic Equipment*, and in FAA Order 6950.19, *Practices and Procedures for Lightning Protection, Grounding, Bonding and Shielding Implementation*.

a. Earth Electrode System (EES). The EES is installed below finished grade outside the perimeter of each ARTCC building or structure. The buried system consists of a network of electrically interconnected bare metallic cables, rods, conduit, pipes, guard wires, and elements such as metallic tanks. The EES shall provide an electrical connection to earth with an electrode-to-earth resistance maintained at 10.0 ohms or less. All ARTCC facility grounding systems terminate securely on the EES. As required in FAA-STD-019, continuous structural steel in an ARTCC building shall be interconnected by electrically conductive bolts, welds, straps or other conductive material and shall be connected directly to the EES at multiple locations to provide valid low impedance paths to ground when needed.

b. Lightning Protection System. A lightning protection system provides a low resistance external path directly to the buried EES where extremely high energy can dissipate safely into the earth. All electrical discharge paths in a lightning protection system shall be short enough to ensure low impulse impedance to quickly reduce the transient potential levels and shall provide high power transfer capability.

(1) Structures. A system providing an external zone of lightning protection for a facility structure shall consist of roof or structure mounted air terminals connected by a continuous cable loop. The loop cable also shall be attached to a minimum of two stranded

FIGURE 4-1. ARTCC GROUND SYSTEMS - TERMINATING WIRE SIZES RECOMMENDED

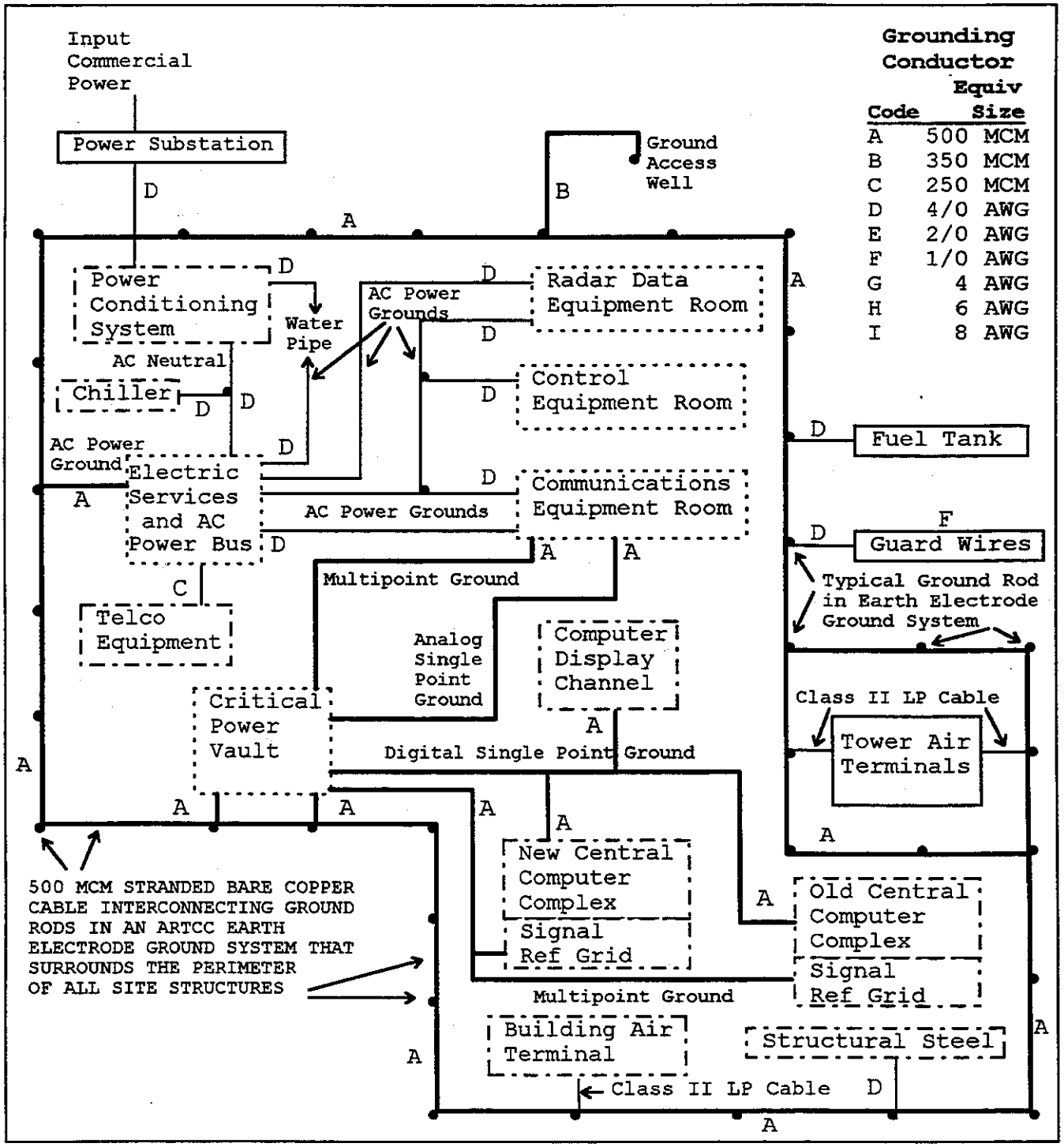

class II lightning protection cable down conductors that follow the structure exterior down to reach the EES. The bottom of each down conductor shall connect directly to its own ground rod in the EES to complete a low resistance path to earth.

(2) Exterior Cables. Surge arresters shall be installed on all incoming power lines immediately after entrance into an ARTCC facility building. Buried communication landlines, not in conduit, shall be protected by grounded guard wires buried above and parallel to the landlines. Transient suppressors shall be installed in all antenna coaxial cables and other communication landlines at the point where each enters an ARTCC facility building.

c. Multipoint Ground System. The multipoint ground system interconnects all normally ground potential, non-current-carrying metallic electronic equipment enclosures, cable enclosures, and building structural steel with the EES. This prevents electrostatic charge buildup, protects against potential differentials, and minimizes effects of spurious ground currents. Multipoint ground system conductors are color coded green with an orange tracer.

(1) Multipoint Ground System Coverage. The multipoint ground system shall interconnect all locations within the building to provide multiple low impedance paths to earth ground where spurious ground currents and voltages are dissipated safely. This system connects to the EES and interconnects normally ground potential non-current-carrying metal, not specifically isolated, such as electronic equipment enclosures, racks, frames, cabinets, conduits, raceways, wireways, communication cable trays, structural steel members, and their interconnecting conductors. Multipoint ground system conductors are sized according to length and current capacity to ensure a continuous low impedance path to termination on the ARTCC main ground plate/bus or a ground rod in the EES. No power system or lightning protection ground, single point ground member, or signal return path shall be connected to the multipoint ground system before termination on the main ground plate/bus or an EES ground rod.

(2) Signal Reference Grid (SRG). An SRG is a low impedance metallic ground reference grid which grounds high frequency, low current signals radiated from computer and digital equipment in the area. These grids are installed in any new or renovated ARTCC communications room under the raised floor. The grid is bonded to raised floor metal grid supports, and other metal elements, such as building structure, water pipes, conduits, air conditioning ducts, cable trays, and area equipment cabinets. An SRG is connected to the multipoint ground system.

(3) 'Chassis Ground' Equipment CAUTION. The multipoint ground system is designed to disburse potential differences and static charges safely through multiple paths to ground and can provide a common ground reference, but shall not be used as a signal return path for equipment. Some equipment uses its equipment chassis and case as a signal return path. This is called a floating ground or 'chassis ground', sometimes indicated by its AC power cord plug having no third prong for an AC protection ground. A floating ground level can vary substantially from earth ground, can produce interfering ground currents in attached ground paths, and can cause disrupting electrostatic discharges which can shut down a system or shock a person. Equipment with a floating ground on its case shall be isolated from the multipoint ground system.

d. Single Point Ground System. The single point ground system (also called a low frequency signal reference ground) shall provide an isolated low impedance electrical path to the EES from each continuous shield on low voltage data cables, audio communication cables, and control cables. These shields first must be electrically isolated and then grounded at one end only to prevent loops in the single point ground system. This system configuration shall be like a tree trunk with branches that never cross or loop back. To reduce noise on audio and data signals, analog and digital single point ground systems shall be isolated from each other and from all other ground systems, except at the ARTCC main ground plate/bus or on a ground rod in the EES. From the main ground plate/bus, single point and multipoint ground systems share the same conductors to the EES. The single point ground system is color coded green with a yellow tracer. RF coaxial cable shields shall NOT be grounded to the single point ground system.

e. AC Power Protection Ground. The AC power protection ground system shall maintain a separate ground path which accompanies and is part of the ARTCC AC power wiring system. AC power ground conductors (called equipment grounding conductors or safety grounds) shall meet NEC Article 250 requirements and shall have a solid green color. One AC power ground shall be included with each color coded phase and neutral (grounded conductor) pair of AC power conductors. During an AC power surge or equipment power fault, the AC power ground provides a continuous low impedance electrical path direct to ground for any excess current. Excessive voltage or fault current in a circuit can activate a protective device, such as a surge arrester, circuit breaker, fuse, varister, or silicon avalanche suppressor. The activated device may open the circuit or limit the circuit capacity while the continuous AC power ground path carries the excess load to ground in order to protect personnel and system equipment.

(1) AC Service Entrance Wye Transformer. An AC service transformer with wye branched secondary windings has a neutral connection point at the windings' junction. The service secondary winding neutral connection point is required by the National Fire Protection Association (NFPA) Title 70, *National Electric Code* (NEC), to be connected separately and directly to earth ground. At an ARTCC, each secondary wye service transformer neutral point shall be connected directly to a ground rod in the EES before the AC service enters the facility. The wye neutral point also shall be connected directly to the AC neutral ground bus, on the supply (line) side in the facility AC service disconnect means. The AC neutral ground bus shall be connected directly to a separate ground rod in the EES. A facility AC power ground bus shall be connected directly to the AC neutral ground bus on the supply (line) side at the facility AC service disconnect means. AC power details are given in Chapter 5.

(2) AC Service Derived Neutral. An AC service transformer which has a delta secondary winding has no connection point for an AC neutral (grounded conductor). Where AC neutral is not available from a transformer, a grounded neutral connection point must be created on the AC protection ground bus inside the main service disconnect means enclosure. This derived AC neutral point shall be connected directly to a ground rod in the EES and also directly to an AC neutral bus on the AC power distribution panel. The AC protection ground bus in the disconnect means shall be connected directly to the AC protection ground bus on the AC power distribution panel. A solid green color AC protection ground wire shall accompany each AC power and neutral, or derived neutral, wire pair leaving the AC power distribution panel.

82. EMC AND EMI PROTECTION. Electromagnetic compatibility (EMC) shall be required in each electronic equipment and system design. EMC prevents undesired emissions, produced by or radiated from equipment or cables, from interfering with any collocated equipment or desired signal. Protection from EMI from poorly designed or installed equipment can be improved by more complete shielding, by properly and separately grounding each equipment enclosure and each outer and inner cable shield, and/or by installing transient suppression devices in susceptible lines. EMC and EMI requirements for equipment, types of protective devices, and verification of testing methods are found in the following standards, specifications, and manuals.

a. FAA-G-2100, *Electronic Equipment, General Requirements*

b. FAA-STD-019B, *Lightning & Surge Protection, Grounding, Bonding & Shielding Requirements for Facilities and Electronic Equipment*

c. FAA-STD-020B, *Transient Protection, Grounding, Bonding and Shielding Requirements for Equipment*

d. MIL-STD-454N, & Changes 1-4, *Standard General Requirements for Electronic Equipment* (Canceled) Use MIL-HDBK-454.

e. MIL-STD-461D, & Change 1, *Requirements for the Control of Electromagnetic Emission and Susceptibility Interference*, Sections 5 & 6 and Appendix A

f. MIL-STD-462D, & Changes 1-3, *Measurement of Electromagnetic Interference Characteristics*

g. MIL-STD-463, *Definitions and System Units, Electromagnetic Interference and Electromagnetic Compatibility Technology*

h. NTIA Manual, *National Telecommunications and Information Administration, Regulations and Procedures for Radio Frequency Management*

83. TRANSIENT AND SURGE PROTECTION. AC service surge arrester grounds and signal and control cable transient suppressor grounds shall be connected as directly as possible to the EES to protect equipment, communications integrity, and personnel.

a. Transient Suppression. Transient suppressors shall be installed in each communications coaxial cable, single wire, or paired wire landline immediately after the landline entrance into an ARTCC building. Installation shall be in compliance with the NEC but shall not violate requirements in FAA-STD-020. Facility interior cables that connect to equipment in other areas shall have transient suppressors installed near the distant equipment and sized to protect against signal, system, or equipment damage, degradation, or upset.

b. Surge Protection. An AC power surge arrester shall be installed on each incoming AC power line where the AC power enters the building, and shall be sized according to Table I or II in FAA-STD-020. To comply with FAA-STD-019, copper data cables shall have surge arrestors installed at both ends to preserve the data ground reference.

84.-88. RESERVED.

SECTION 2. EARTH ELECTRODE SYSTEM (EES)

89. GENERAL. All facility grounding systems terminate on the EES. The EES is the facility ground system designed specifically to provide a low electrode-to-earth resistance through which spurious currents can dissipate safely to earth without harm to structures, equipment, or personnel. The ARTCC existing EES shall comply at least with minimum standards in FAA-STD-019, but a planned modification to the EES should meet standards recommended in this handbook to protect facility and equipment anticipated future loads and personnel.

90. ENVIRONMENTAL CONDITIONS EVALUATION. The following environmental conditions shall be evaluated for the site before a new or upgraded earth electrode ground system is planned for an ARTCC facility.

a. Type of terrain; i.e., soil or rock.

b. Type and condition of subterranean earth.

c. Classification of site location; i.e., wetland or flood zone.

d. Depth of frost line.

Normally, this information is available for an existing site. A new site may require soil borings to determine the type of subterranean soil. If a tower is planned for a new site, soil borings are required to design the tower foundation. Soil resistivity, water table level, and data evaluated from soil borings is utilized in the design of the EES. When a communication tower is not planned, soil borings shall be made in the vicinity of the planned ARTCC.

91. EARTH RESISTANCE. Measurements to predict earth resistance shall be made at the location where the EES will be installed. Resistance measurements of the completed EES should confirm an electrode-to-earth resistance of 10.0 ohms or less for optimum system performance. If measurements indicate that predicted system resistance is not being achieved, one of several options may lower the system electrode-to-earth resistance to meet the site requirement. These options include lengthening existing ground rods, adding ground system elements with more surface area, such as copper straps or plates, or chemically enhancing the soil. Procedures and calculation methods for predicting resistance and choosing which option to pursue are contained in FAA Orders 6950.19, *Practices and Procedures for Lightning Protection, Grounding, Bonding, and Shielding Implementation*, and 6950.20, *Fundamental Considerations of Lightning Protection, Grounding, Bonding, and Shielding*.

92. DESIGN PARAMETERS. Basic elements of an EES include buried bare copper conductors connecting electrically conductive metal ground rods which have been driven deep into the earth. All EES elements are connected and form a network of copper wire, strap, or plates; steel pipe, tanks, and conduit; and copper clad steel rods. In special cases some conductors may be anchored flat on rocky terrain. Each EES design may differ in certain details to accommodate unique conditions at each site, but the fundamental design goal is to establish an EES ground that produces an electrode-to-earth resistance measurement of 10.0 ohms or less for the entire system.

a. Structure Earth Electrode Grounds. A buried EES consisting of a continuous ground cable connected to ground rods shall outline the perimeter of each ARTCC site structure. The cable shall be installed 2 feet below grade, 2 to 6 feet away from the structure, and outside the roof dripline. Structures separated 15 feet or less may be considered one structure to be surrounded by one perimeter EES cable. Structures separated more than 15 feet but less than 30 feet may share in common an earth electrode cable routed between and parallel to both structures as part of each structure's perimeter cable. The EES is the termination for all air terminal down conductors and ground conductors from structural steel, fuel tanks, water lines, landline guard wires, metal guy wires, the ARTCC main ground plate/bus, and the AC power system neutral and ground.

b. Ground Rod System. EES ground rods shall be installed at each structure corner and shall outline the perimeter of each building and each separate structure. Perimeter ground rods are installed 2 to 6 feet from the building or structure. Ground rods shall be copper-clad steel or solid copper and shall be a minimum of 10 feet long and 3/4 inch in diameter as required by FAA-STD-019. Rods shall have a threaded surface so rod length may be extended by screwing rods together where deeper penetration into the earth is required. All conductors which interconnect rods shall be positioned at least 2 feet below ground surface. The top of each ground rod shall be not less than one foot below ground surface. All buried connections to the earth electrode system shall be by exothermic welds. The EES shall have an electrode-to-earth resistance of 10.0 ohms or less, measured in accordance with FAA-STD-019 and as described in Section 7 of this chapter.

(1) Depth of Penetration. The depth to which ground rods are driven depends upon the electrical conductivity of the soil, the site water table level, and distance between the rods. Penetration into a permanent water table is most desirable. In cold regions rods shall extend below the frost line if possible. Driving a ground rod farther

into the soil to reach a water table is recommended when the upper portion of the rod resides in soil with a low moisture content or in poorly conductive soil such as sand or permafrost. In good conductive soil, the upper 10 feet of a ground rod will conduct most of the current to earth, so current flow further down the rod is limited.

(2) Number and Spacing of Rods. The number of ground rods used at an ARTCC site may be more than would be needed to meet the electrode-to-earth resistance requirement. ARTCCs can need more rods for required connections. Rods should be spaced from each other a minimum of two to three rod lengths for maximum effect, but rods never shall be closer than one ground rod length apart. Between ground rods spaced closer than two rod lengths apart, mutual inductance increases as spacing decreases and reduces the effectiveness of the rods. A chart which compares the change in rod effective resistance, according to the number of rods installed and the distance separating them, is shown in Figure 4-2, *Change in Ground Rod Effective Resistance per Quantity and Spacing of Rods*.

(3) Interconnection of Rods. Copper cables or straps shall interconnect ground rods to form a continuous conductive path. ARTCC EES new or modified interconnecting perimeter conductor is recommended to be 500 thousand circular mils (500 MCM) stranded copper cable, or equal area. All EES cables shall be buried at least 2 feet below ground. In cold regions cables should be buried below the frost line if possible. Buried connections to rods shall be by exothermic weld or, if in an access well, by an FAA approved clamp connector only if necessary.

c. Alternative Ground Plane Systems. An alternative ground plane system can use wires or large copper straps and plates buried in sandy or rocky terrain in the form of radials or grids. Multiple lengths of the conducting radials will provide a large area over which lightning can dissipate. Conductors are buried underground or anchored on the surface and covered with earth, if possible. Underground conductors are buried at least 2 feet, or below the frost line, whichever is deeper.

(1) Underground System. Bare conductors buried in a horizontal plane in a radial or grid configuration can produce an electrode-to-earth resistance of less than 10.0 ohms. In poor or layered soil, ground rods may be needed in addition to radial or grid conductors in order to reduce the resistance. Increasing the number of conductors does not automatically reduce the electrode-to-earth resistance unless the conductors are spaced far enough apart to minimize mutual inductance between conductors. In addition, the

FIGURE 4-2. CHANGE IN GROUND ROD EFFECTIVE RESISTANCE PER QUANTITY AND SPACING OF RODS

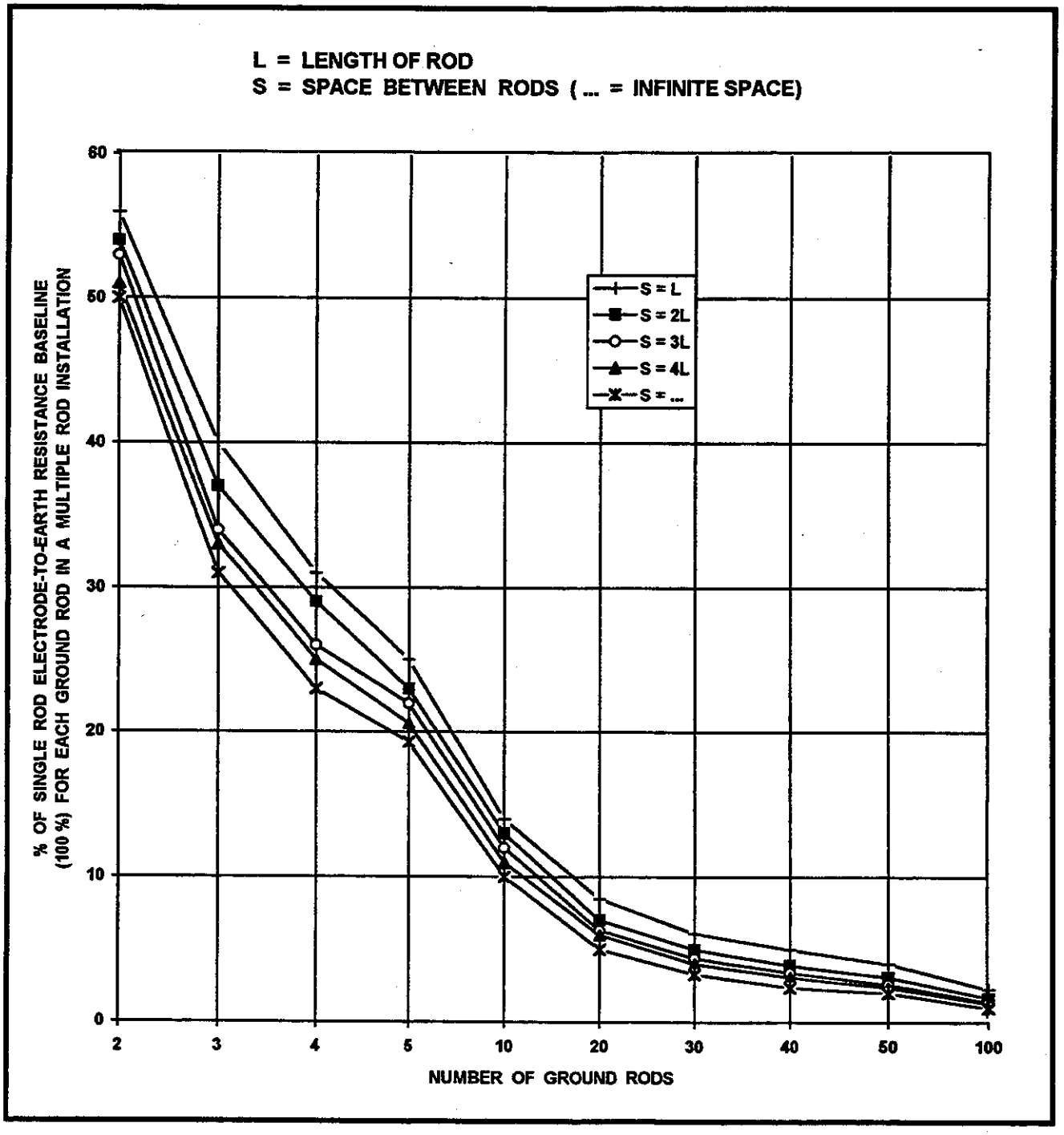

FIGURE 4-3. TYPICAL ARTCC EARTH ELECTRODS SYSTEM (EES) COMPONENTS

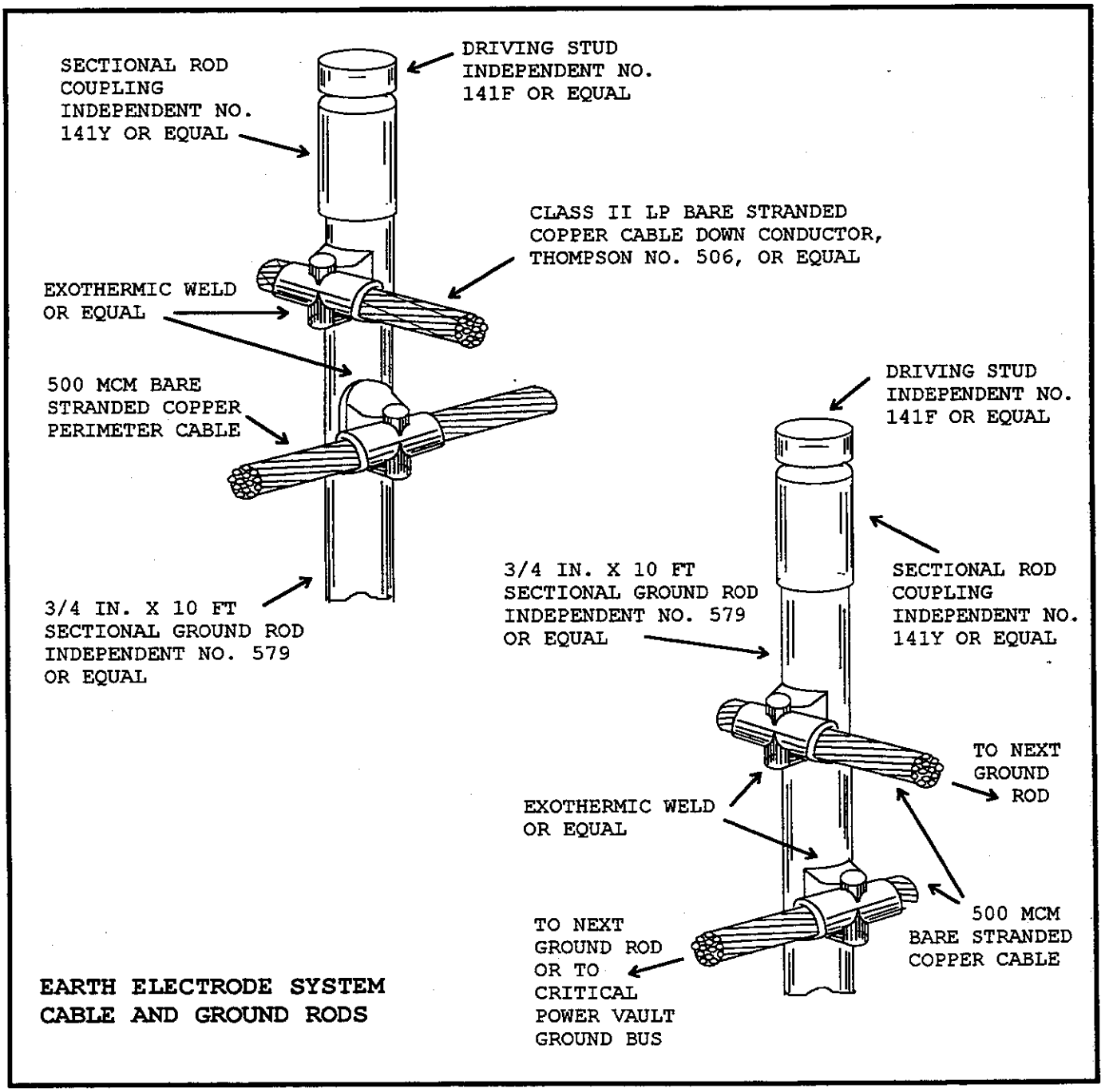

FIGURE 4-4. TYPICAL ARTCC EARTH ELECTRODE SYSTEM (EES)

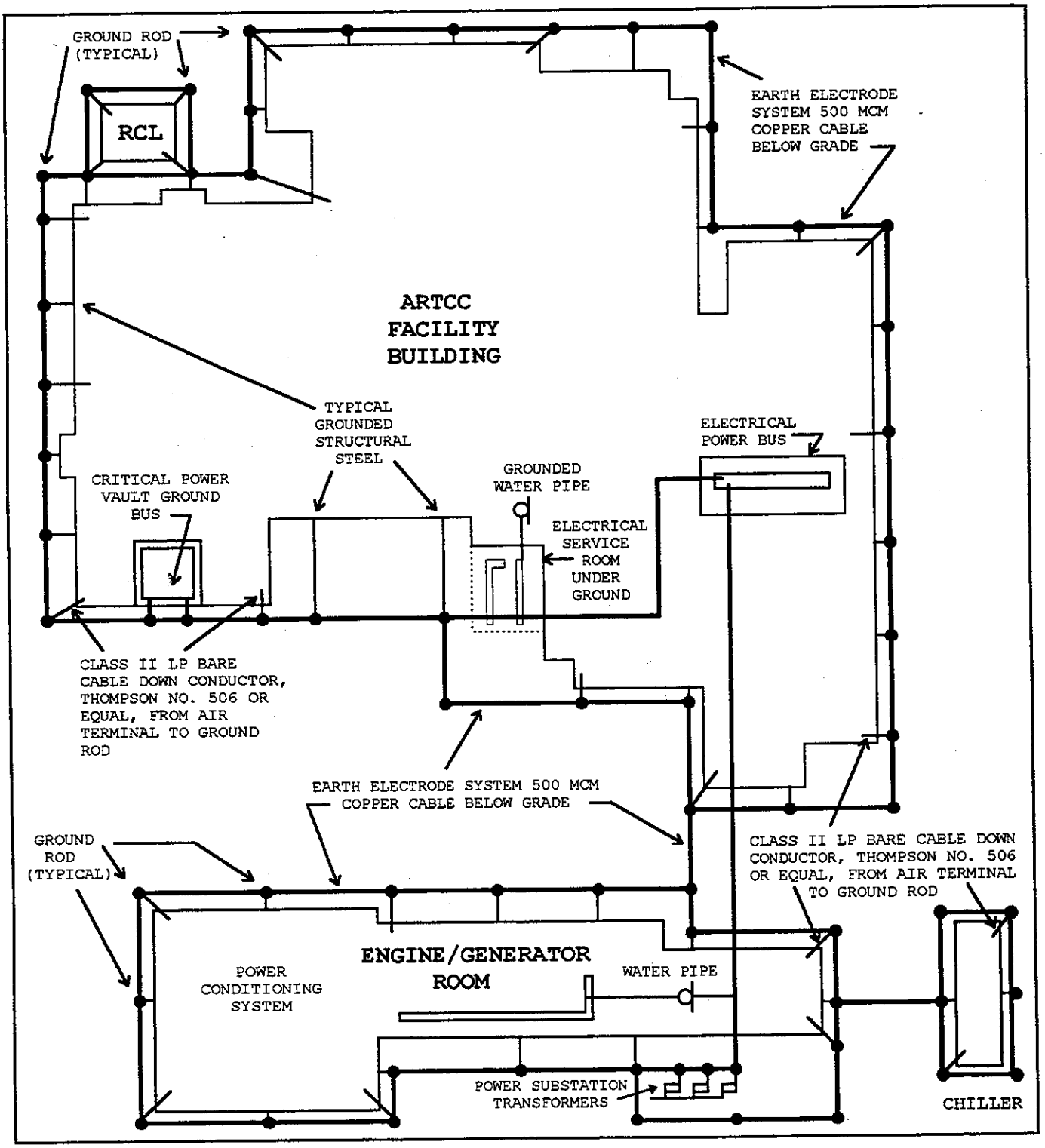

In northern areas where the frost line is at a depth greater than 2 feet, the trenches are dug deeper than the frost line.

(b) Rod Connections. Exothermic weld connections to ground rods are made using proper size splicer molds and cartridges. Steps showing how to mold an exothermic weld are illustrated in Figure 4-5, *Exothermic Welding Process*, and Figure 4-6, *Ground Rod Welds*.

(3) Access Wells. Periodic inspection of the EES is accommodated by providing access wells at some ground rods. Wells shall be a minimum of 15 inches in diameter (177 square inches in area) for maintenance accessibility and shall be constructed of clay pipe, PVC, or poured concrete with a hinged or removable cover plate. When part of a grounding system is located underneath a structure, an access well may be located on the floor inside the structure. One access well at the site should be located near an area of undisturbed earth so that earth resistance measurements can be made for EES proof of performance testing. Figure 4-7, *Ground Rod/Interconnecting Cable Installation Detail*, and Figure 4-8, *Earth Electrode System (EES) Access Well Detail*, provide information on access well installation.

(4) Earth Resistance Measurements. The electrode-to-earth resistance of each ground rod shall be measured, in accordance with Section 7, at the time the rod is installed to be sure it meets the required design resistance. If the resistance is too high and must be lowered, the rod may be driven deeper or a replacement rod may be driven in a new location. To drive a rod deeper, another section of rod must be added using a coupling attached to the threaded rod end.

d. Repair of Existing EES. If the average electrode-to-earth resistance of an existing EES exceeds a value of 10.0 ohms, dig a trench with hand tools to uncover the perimeter copper conductor and its ground rod bonds for a complete inspection.

(1) Interconnecting Conductor. Verify that the uncovered existing interconnecting perimeter cable is 500 MCM bare stranded copper. Examine the entire length of cable for breaks and for good electrical and physical bonds to the existing ground rods. Faulty welds shall be repaired using an exothermic 500 MCM size cable splicer mold and weld material. Retest the earth electrode system after the interconnecting cable has been inspected and repaired properly.

(2) Existing EES Cable. An existing EES cable need not be replaced if it meets all specifications. If any existing EES interconnecting cable around an ARTCC facility or structure perimeter is smaller than 500 MCM, a 500 MCM bare stranded copper cable shall be

FIGURE 4-5. EXOTHERMIC WELDING PROCESS

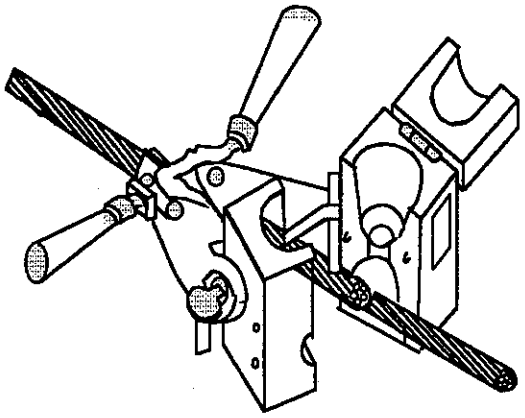

1. PRE-HEAT AND CLEAN MOLD; CLEAN THE CONDUCTORS; PLACE CABLE ENDS IN MOLD

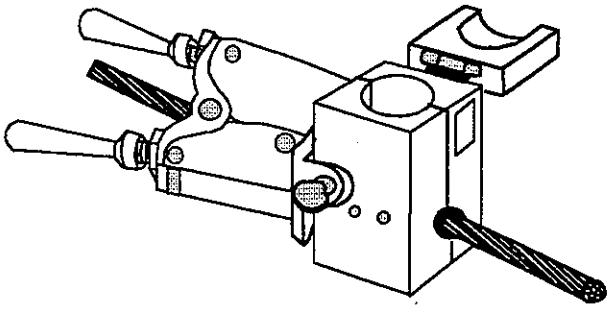

2. CLOSE HANDLES TO LOCK MOLD; DROP METAL DISK INTO MOLD

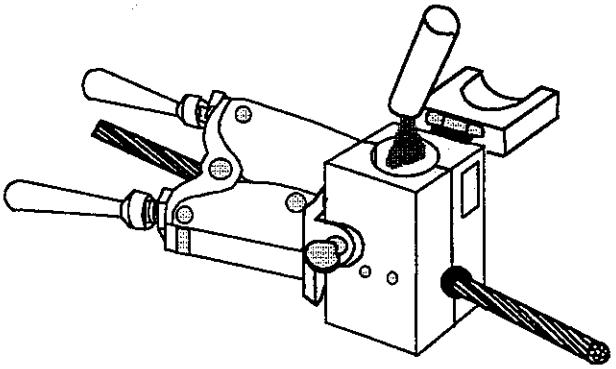

3. DUMP WELD METAL INTO MOLD; SPRINKLE STARTING MATERIAL OVER WELD METAL AND ON LIP OF MOLD.

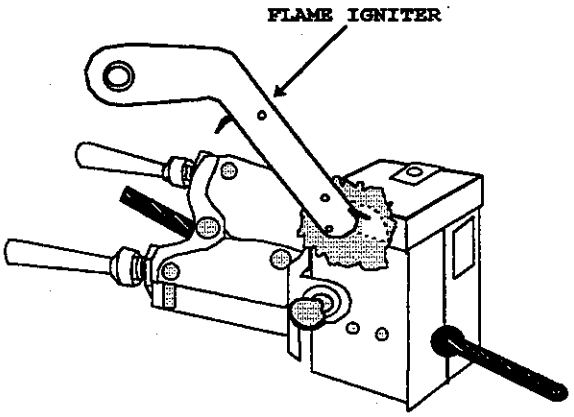

4. CLOSE COVER AND IGNITE; OPEN MOLD AFTER METAL SOLIDIFIES; REMOVE SLAG FROM MOLD BEFORE MAKING NEXT CONNECTION

FIGURE 4-6. GROUND ROD WELDS

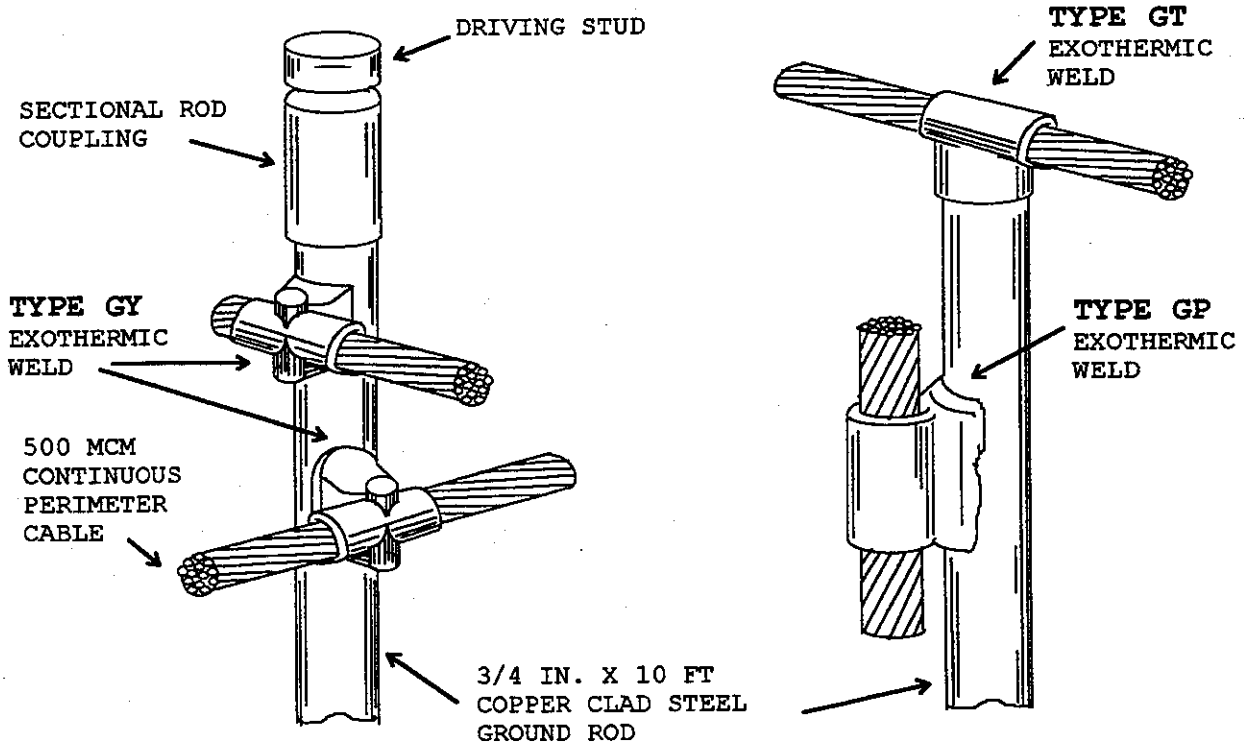

EXOTHERMIC WELD CONNECTIONS

EXOTHERMIC WELD NOTES:

1. DUXSEAL MADE BY JOHNS-MANVILLE, OR EQUAL, SHALL BE USED TO SEAL AROUND EACH CABLE ON THE OUTSIDE OF THE MOLD FOR ALL CABLE CONNECTIONS.
2. CABLES SHALL BE CLEANED WITH A WIRE BRUSH AND CLAMPED IN PLACE TO PREVENT CABLE MOVEMENT BEFORE OR DURING SHOOTING THE WELD.
3. EACH MOLD SHALL BE A TYPE APPROVED FOR PROPER CONNECTION AND SHALL BE CLEANED PRIOR TO EACH SHOT.
4. MOLDS SHALL NOT BE MODIFIED.
5. AT CONTRACTOR OPTION, GROUNDING CONNECTIONS MAY BE COMPLETED BY DOUBLE CLAMP AND BRAZE PER DRAWING SW-D-9148-2 OR EXOTHERMIC WELD PROCESS PER DRAWING SW-9148-3.

FIGURE 4-7. GROUND ROD/INTERCONNECTING CABLE INSTALLATION DETAIL

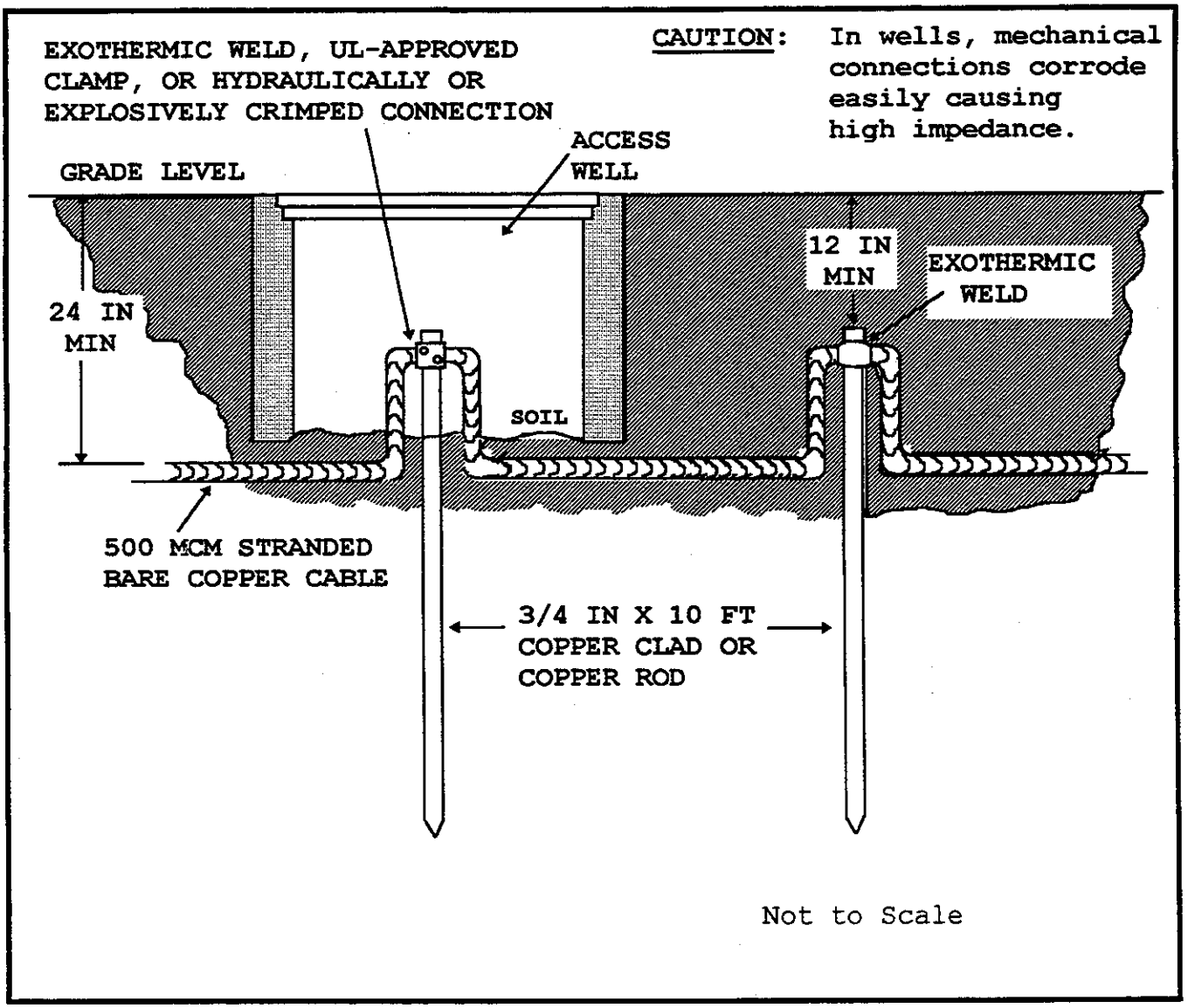

FIGURE 4-8. EARTH ELECTRODE SYSTEM (EES) ACCESS WELL DETAIL

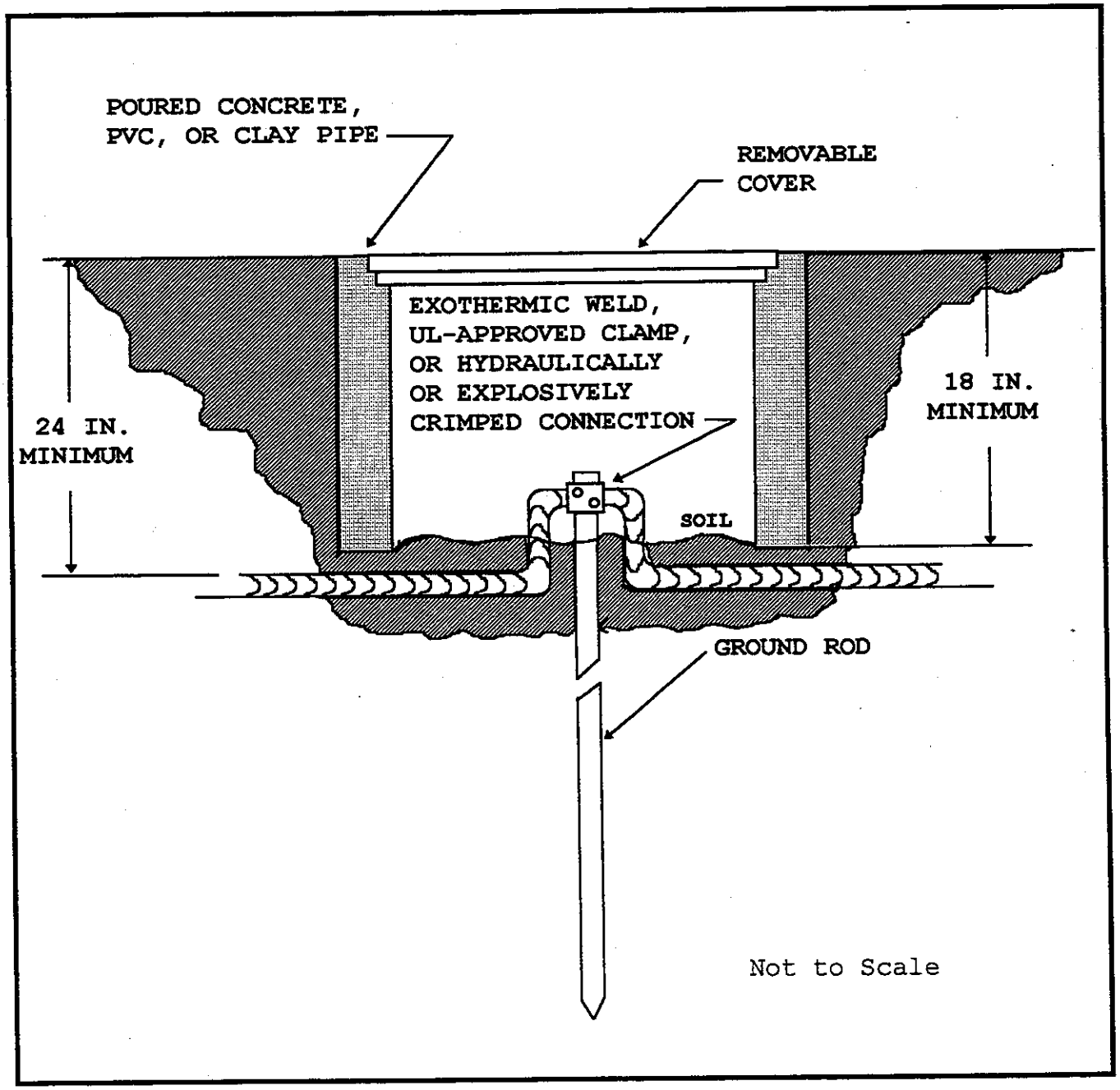

added with or shall replace the uncovered existing cable, even though the existing cable meets the test requirements of this directive.

e. Upgrade of Existing EES. The existing EES shall be upgraded if the average measurement of electrode-to-earth resistance exceeds the 10.0 ohms requirement after repairs have been made.

(1) Interconnecting Conductor. Any existing bare conductor which does not conform to specifications shall be left in place and be connected to the new EES to ensure only one continuous EES. The existing AC power transformer ground connection may be left intact. Lay a new 500 MCM bare stranded copper cable in the perimeter trench. Ensure the conductor has no kinks or sharp bends. Attach the new cable to each ground rod by exothermic weld using a cross-cable mold and weld material. Close the loop by welding the 500 MCM conductor ends together using a 500 MCM splicer mold and cartridge.

(2) Ground Rod Performance. Two alternatives can increase ground rod system performance. One alternative is to increase the number of ground rods by installing a rod between existing interconnected rods, nearer to the rod with the higher electrode-to-earth resistance if possible. Rods shall be installed no closer to any rod than a distance of twice the length of a rod for maximum benefit. The other alternative is to drive rods deeper into the earth. Sections of rod are added to a rod to increase rod length as necessary. The alternative used is determined by site layout, soil conditions, and measured electrode-to-earth resistance. If the addition of ground rods is not practical, driving rods deeper into the earth may reduce the electrode-to-earth resistance to an acceptable level.

(3) Overall Grounding System. Examine all elements of the ARTCC site exterior grounding system from the facility main ground plate/bus outward. Refer to grounding system element sizes shown in Figure 4-9, *Connections to Earth Electrode System (EES)*. Upgrade any ground conductors which are not sized for expected ARTCC loads. Use exothermic welds to repair or replace ground conductor bonds in poor condition, except in an access well where a clamped connection to a ground rod is necessary for system verification. Each air terminal down conductor shall be class II LP bare copper cable, Thompson No. 506, or equal, and must go directly to a ground rod in the EES. Install new ground rods in the EES as needed for this requirement or where additional connections are needed from facility structural steel. Bond each conductor to its ground rod by exothermic weld. Interconnect each new ground rod into its perimeter earth electrode cable loop by exothermic weld.

FIGURE 4-9. CONNECTIONS TO EARTH ELECTRODE SYSTEM (EES)

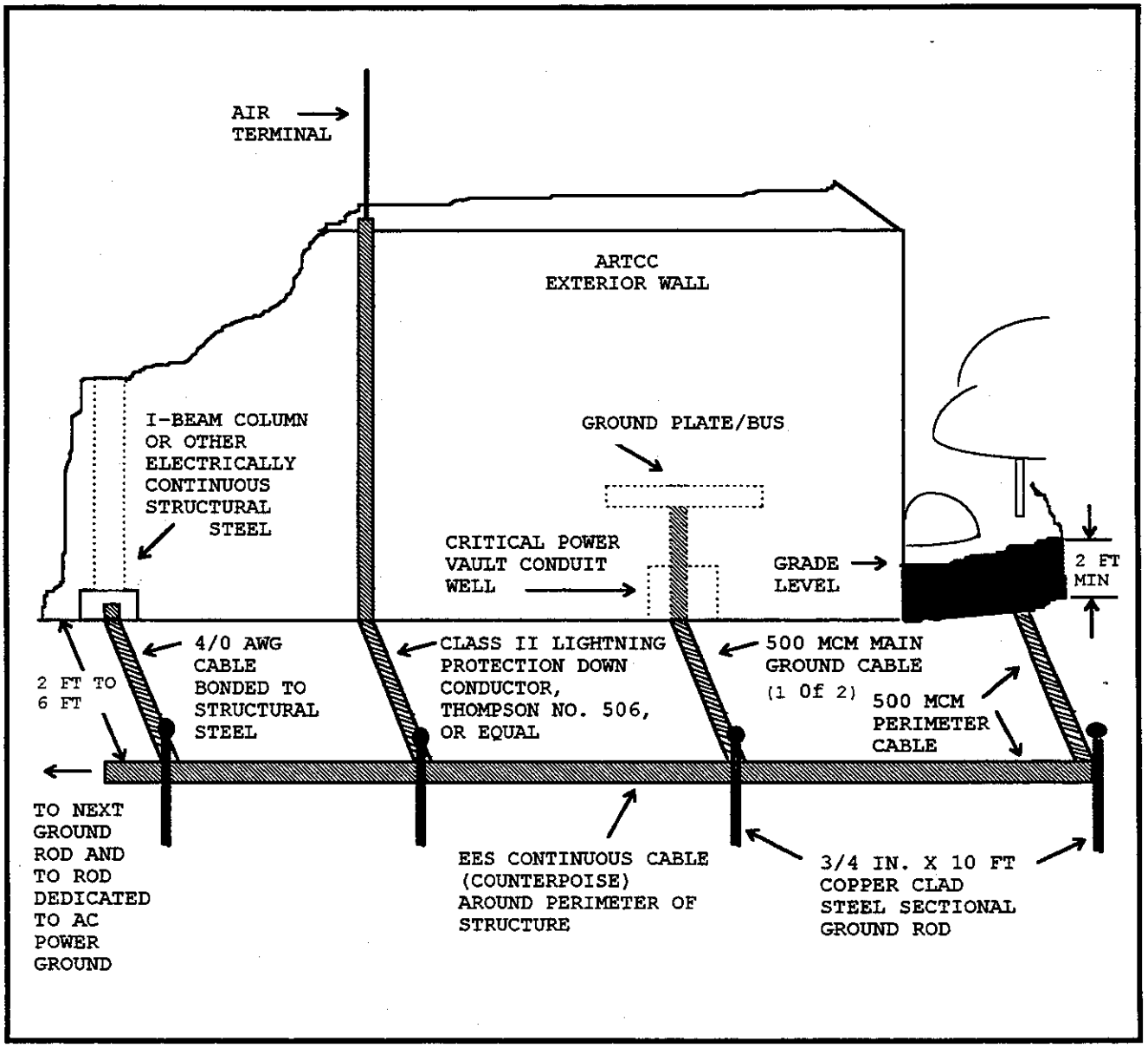

(4) Earth Resistance Measurements. Retest the electrode-to-earth resistance of the upgraded EES, including new rods, cables, and connections. Use the testing procedure described in Section 7 in this chapter.

f. Alternative Ground Plane System. Copper conductor size requirements for alternative ground planes vary with the type and condition of soil encountered or rock surface to be covered. In non-corrosive soil, the conductors shall be no smaller than No. 6 AWG bare copper wire. A rock surface will require No. 1/0 AWG or larger wire for the conductors. Copper straps three to six inches in width and one-eighth inch thick may be used instead of round wire to cover rock surfaces; however, straps shall not be used in high wind areas.

(1) Soil Installation. In poor conducting soil, add needed ground electrodes interconnected in a radial or grid array of at least three copper wire or strap conductors buried a minimum of 24 inches below grade. Use lengths short enough to avoid large step voltage buildup. Ensure only one EES by connecting each electrode array to a ground rod interconnected in the EES buried around the perimeter of a site building or structure.

(a) Conductor Burial. Trenches for the conductors are dug either by hand or with a trench digger. Installation of ground rods is desirable if soil conditions permit. Ground rods are driven in place. Placement of each ground rod is determined by the location of rock or water and the corrosiveness and resistivity of the soil.

(b) Conductor Connection. Connections are made using exothermic welds or cable clamps. A ground access well is required at a rod where a clamp is used below grade to join conductors.

(c) Main Ground Connection. Each of the two ARTCC main ground conductors is 500 MCM stranded copper cable and is attached directly to its own dedicated ground rod in the EES perimeter cable loop by an exothermic weld or, within a ground access well, by a cable clamp. The other end of the cable is attached with a bolt lug and a split bolt connector to the main ground plate/bus in the critical power vault.

(2) Rock Surface Installation. Surface mounted ground conductors shall be secured to the surface and shall slope down and away from the structure being protected. An anchor bolt shall be used every 10 feet of ground conductor length. Rock surface installation requires the use of anchor bolts to secure all ground wire or strap to the rock. An exothermic weld or cable clamp is used

to make an electrical connection between a bolt and ground conductor, except where the bolt is in rock, a poor conductor. Where an area of soil will permit installation of a ground rod, a rod shall be driven into the soil to enhance the ground system. Rod connection to the ground conductor shall be by exothermic weld. Ground rods shall be installed at least one rod length apart, but at least two rod length separation is preferred to minimize mutual inductive coupling between the rods. Mutual inductive coupling reduces the effectiveness of the rods to be low impedance paths to ground.

(a) Conductor Placement. Surface conductors in rocky terrain ground system arrays must slope down and away from any structure and are placed in straight paths outward from the 500 MCM copper cable around the perimeter of the ARTCC building or structure. Conductor connection is by exothermic weld. When rolling topography, an earth berm, or obstacles such as rocks are encountered, the conductor is routed straight over, not around, the obstacle. A conductor shall not be placed where its path would require detouring around an object. Added conductor length increases inductance and reduces ground conductor effectiveness. Careful site planning is required for a surface mounted EES to provide enough electrodes without exceeding the maximum length allowed per conductor to avoid dangerous levels of step voltage buildup.

(b) Main Ground Connection. Each ARTCC main ground conductor is 500 MCM stranded copper cable and is attached directly to its own dedicated ground rod in the EES perimeter cable loop by an exothermic weld or, within a ground access well, by a cable clamp. The other end of the cable is attached by a bolt lug and split bolt connector to the main ground plate/bus in the critical power vault.

g. Chemical Enhancement. Ion-producing chemicals can be added to the earth surrounding a ground rod to enhance soil conductivity at that rod. The commonly available chemicals listed below are used normally for soil conductivity enhancement.

Name	Symbol	Common Name
Magnesium sulfate	$MgSO_4$	Epsom salt
Copper sulfate	$CuSO_4$	Blue vitriol
Calcium chloride	$CaCl_2$	
Sodium chloride	$NaCl$	Common salt
Potassium nitrate	KNO_3	Saltpeter

Magnesium sulfate is the most commonly used chemical due to its low cost and high electrical conductivity. Also, it is the least corrosive of the chemicals listed. The chemical can be applied in a trench around a ground rod as shown in Figure 4-10, *Trench Method of Soil Treatment*, or added to the soil in a ground access well as shown in Figure 4-11, *Alternate Method of Soil Treatment*.

h. Documentation of EES Installation. Redline all applicable facility drawings and record in detail each change made due to the upgrade of an existing EES. Detailed changes shall be redlined also on any new drawings for a new EES. Photographs of below ground exothermic welds should be taken while the welds are visible. All applicable documentation shall be provided to the ARTCC facility management.

i. Materials Required. Installing, repairing, or upgrading an EES may require some or all of the materials listed in Table 4-1, *ARTCC Earth Electrode System Installation Materials*.

94. ARTCC MAIN GROUND PLATE/BUS. The ARTCC main ground plate/bus is a high capacity, low resistance, common junction conductor on which the building internal grounding systems terminate. Then typically, two main ground conductors connect the main ground plate/bus directly to the EES.

95. MAIN GROUND PLATE/BUS INSTALLATION. The ARTCC main ground plate/bus is located inside the ARTCC building critical power vault as shown in Figure 4-12, *ARTCC Main Ground Plate/Bus Installation*.

a. Main Ground Plate/Bus. The main ground plate/bus conductor is installed on the critical power vault wall 3 feet above the floor of the room and follows up and over any doorway to form a continuous path around the room. This conductor is a continuous copper bar, 4 inches by 1/4 inch and is mounted on nonconductive material and secured with insulated hardware. ARTCC facility grounding systems terminating on the main ground plate/bus shall utilize paths and conductors as short as possible. Terminations on the bus shall be as near to a main ground cable exiting the facility directly to the EES as practical in order to keep ground paths short and direct.

b. Main Ground Cable PVC Conduit. Polyvinyl chloride (PVC) conduit shall enclose each ARTCC main ground conductor that connects the main ground plate/bus in the ARTCC critical power vault to a dedicated ground rod in the EES. For new installations, install 2 inch inside diameter (ID) PVC conduit between the dedicated ground

FIGURE 4-10. TRENCH METHOD OF SOIL-TREATMENT

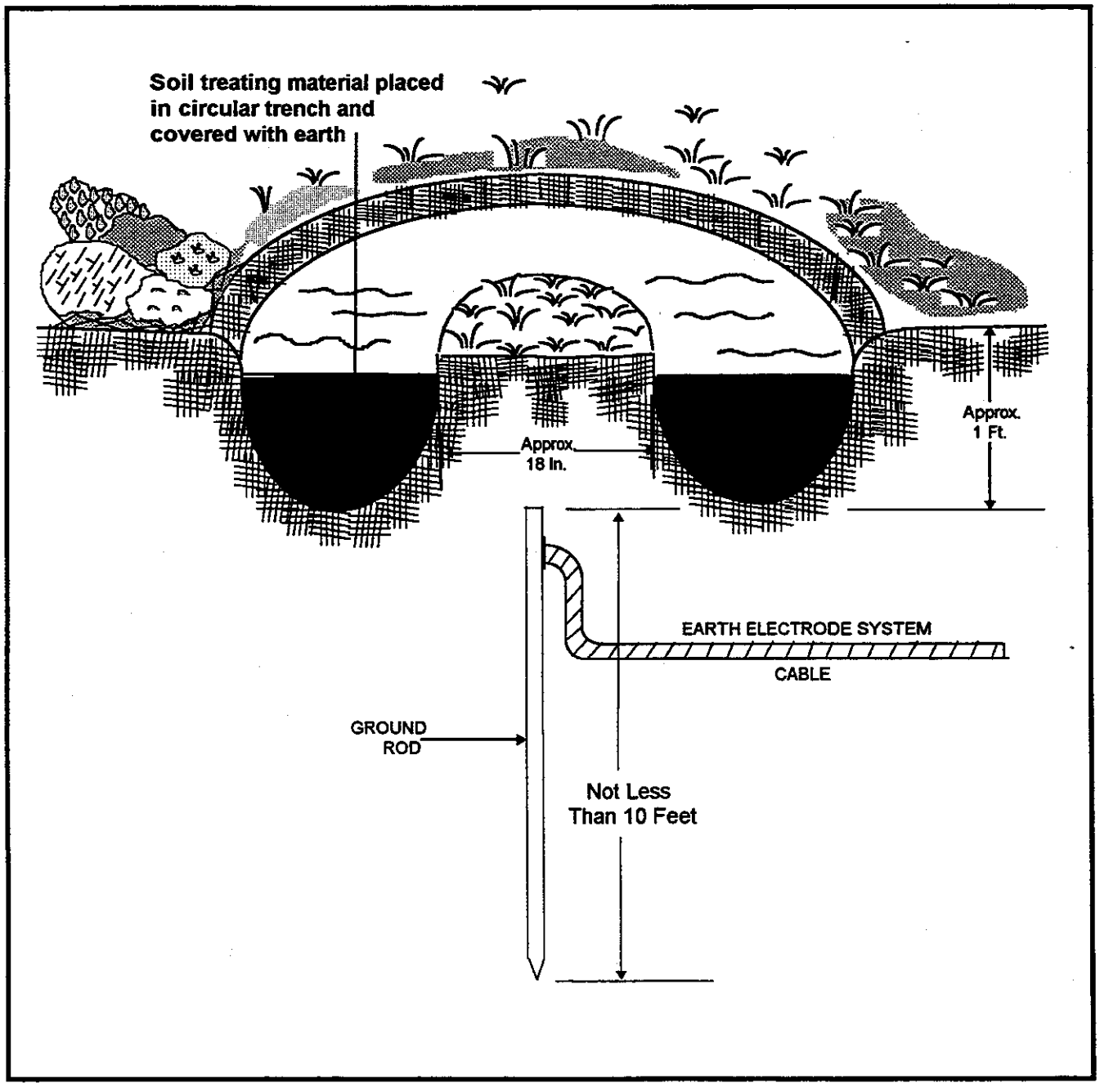

FIGURE 4-11. ALTERNATE METHOD OF SOIL TREATMENT

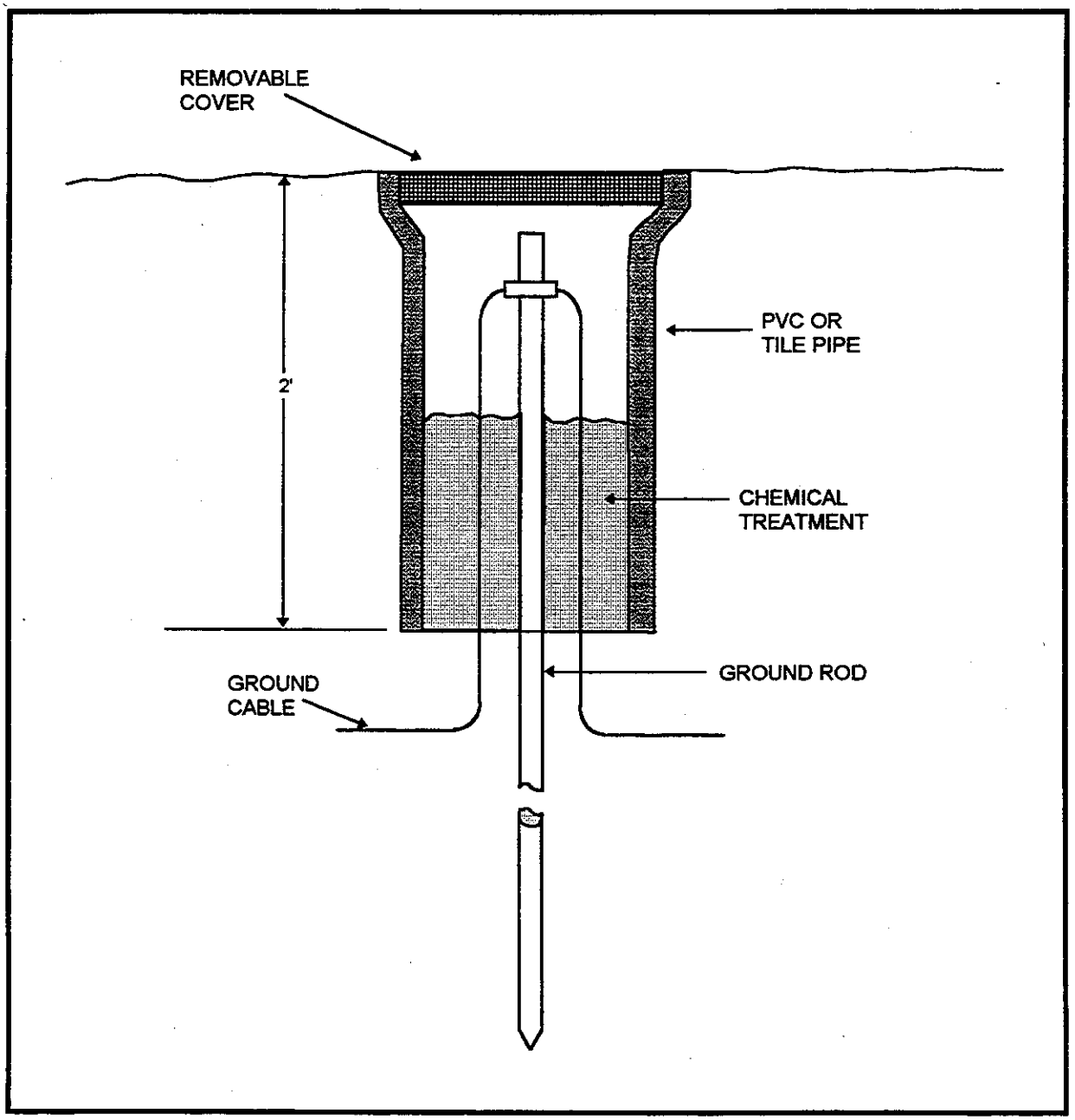

TABLE 4-1. ARTCC EARTH ELECTRODE SYSTEM INSTALLATION MATERIALS

ITEM	MATERIAL (QTY AS REQUIRED)	DESCRIPTION	MANUFACTURER & P/N (OR EQUAL)
Ground Rod 10' Sections for Earth Electrode System (EES)			
1	**Ground Rod**, 7/8"x10'	sectional, copper clad steel	IPC 579T
2	Threaded Coupler	solid copper clad steel	IPC 141Y
3	Driving Stud	threaded	IPC 141F
4	Weld Mold, Rod Splice	3/4" copper clad rod sections	Cadweld HDGBD-18
5	Weld Metal	splice	Cadweld 2-200
6	Clamp, Rod Sections	splice ground rod sections	Cadweld B-120
Facility Perimeter EES Cable & Both Main Ground Cables from the Critical Power Vault to EES Ground Rods			
7	**500 MCM Cable**	bare copper, 37 strands	Okonite 514-02-3044
8	Weld Mold, Cross-Cable	500 MCM cable to ground rod	Cadweld GYJ-183Q
9	Weld Metal	cross rod weld	Cadweld 500
10	Handle Clamp	for "J" mold	Cadweld L-159
11	Weld Mold, Cable Splice	500 MCM cable ends, heavy duty	Cadweld HDSSD-3Q
12	Weld Metal	Splice cable ends, heavy duty	Cadweld 2-150
Air Terminal Cable System & Down Conductors to EES Ground Rods			
13	**Class I Lightning Protection Cable** from Exposed Electrically Isolated Metal	Connect to Air Terminal Loop Cable or Down Conductor: 32 strands 17 gauge braided bare copper cable	Thompson 32 (Use Thompson 506 if heavier lightning protection required)
14	**Class II Lightning Protection Cable**, Air Terminal Cable System, Down Conductors, & Connecting Cables	Air Terminal Loop Cable, Down Conductors, Connections to air terminals & to isolated metal; 131,500 circular mils, 28 strands rope lay bare copper	Thompson 506
Cables from Facility Structure to EES Ground Rods			
15	**4/0 AWG Cable**	bare copper, 19 strands	Okonite 514-02-3037
16	Weld Mold, Cross Cable	4/0 AWG cable to ground rod	Cadweld GYE-182Q
17	Weld Metal	cross rod weld	Cadweld 150
18	Handle Clamp	for "E" mold	Cadweld L-160

FIGURE 4-12. ARTCC MAIN GROUND PLATE/BUS INSTALLATION

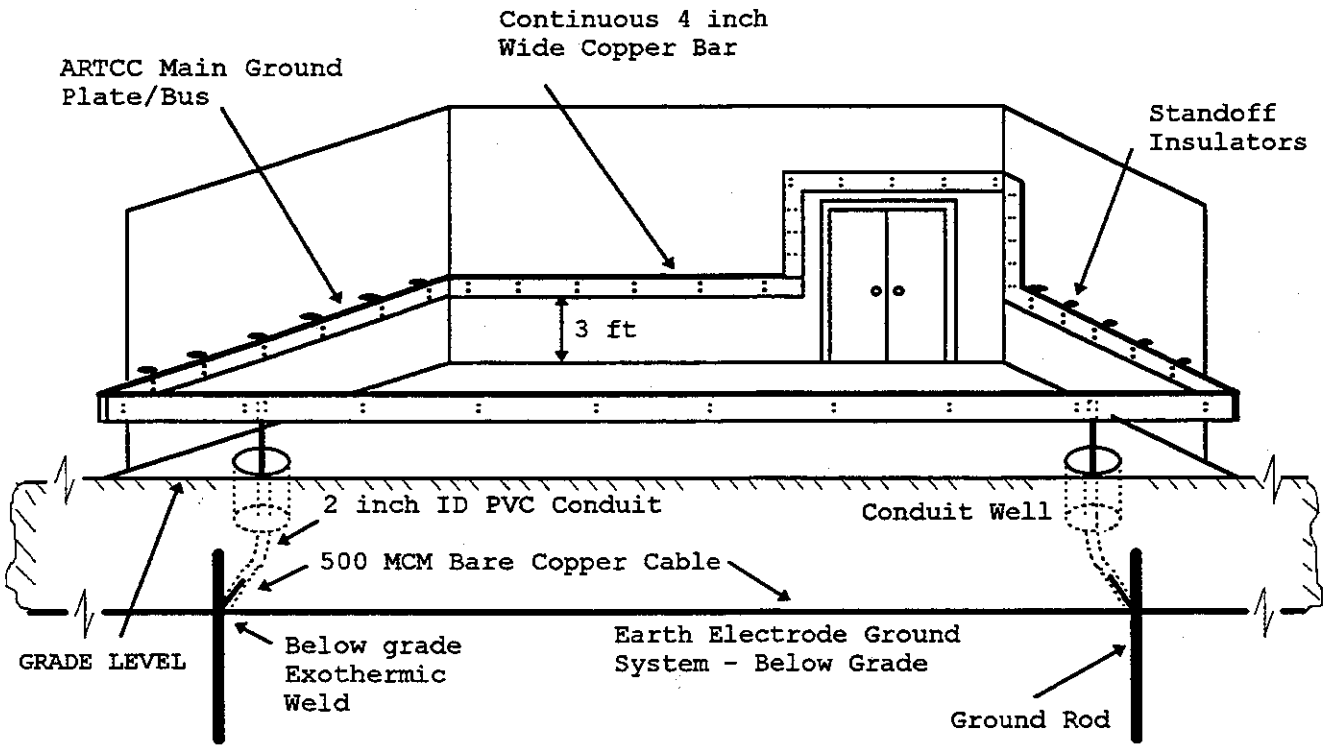

CUTAWAY VIEW OF CRITICAL POWER VAULT

rod and a 24 inch radius PVC sweep elbow extending out from under the ARTCC foundation. The PVC conduit elbow shall curve up into a conduit well just inside the facility wall, as illustrated in Figure 4-13, *ARTCC Main Ground Cable PVC Conduit Installation*. Extend the conduit up through the conduit well, at least a foot, toward the main ground plate/bus. Anchor the conduit to the foundation or wall for stability as necessary. The ground rod and conduit shall be located to provide the shortest practical cable length from the EES to the main ground plate/bus connection.

c. Main Ground conductor. An ARTCC main ground conductor shall be a 500 MCM stranded bare copper cable no more than 50 feet in length. It shall be installed through PVC conduit from the ARTCC critical power vault to a dedicated ground rod in the EES. If no existing ground rod is located close enough to the PVC conduit, install a ground rod dedicated to the main ground plate/bus and interconnect it to the ARTCC earth electrode ground system 500 MCM perimeter cable. Locate the new rod directly in line with and out beyond the end of the PVC conduit and at least two rod lengths away from any other ground rod. For a new installation, a main ground cable shall be routed to its ground rod through PVC conduit exiting the facility under the building foundation. A 24 inch radius, 2 inch ID, PVC conduit sweep elbow, shown in Figure 4-13, facilitates bending the stiff cable. The main ground conductor shall be connected to the main ground/plate bus with an exothermic weld or other irreversible connection to meet the requirements of NEC NFPA-70, Article 250-81 exception 1.

96.-100. RESERVED.

FIGURE 4-13. ARTCC MAIN GROUND CABLE PVC CONDUIT INSTALLATION

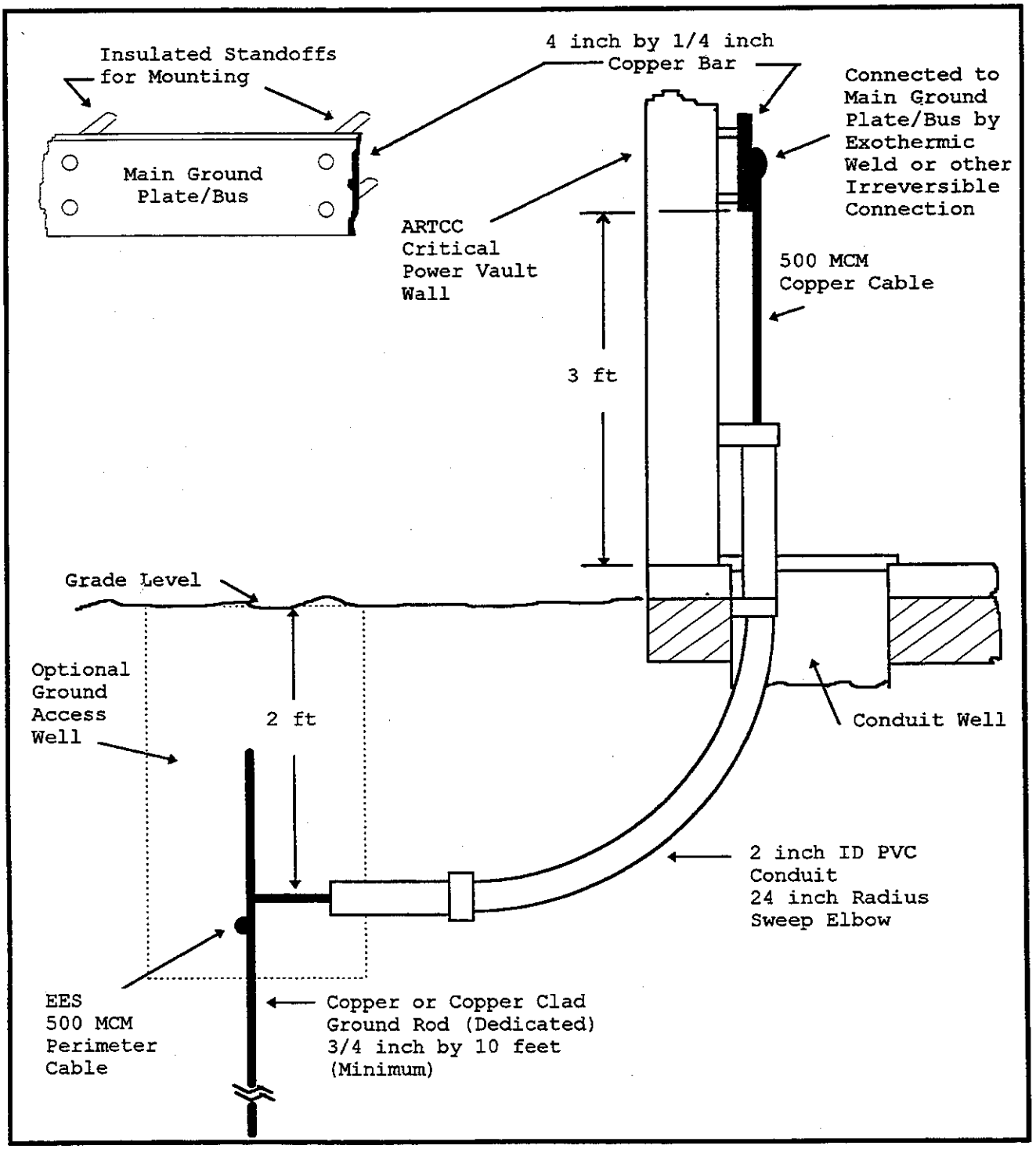

SECTION 3. LIGHTNING PROTECTION SYSTEM

101. REQUIREMENTS. Lightning damage to ARTCC personnel, equipment, and structures could occur from lightning discharge directly to a structure or from lightning induced voltage or current on cables which enter a building. ARTCC site structures shall be protected by a properly designed and installed lightning protection system grounded to the EES. The protection system shall consist of correctly located and sized air terminals (lightning rods), guard ground wires installed above buried cable runs, ferrous conduit to contain cables, grounded transmission line shields, transient suppressors in landlines, and surge arresters on power lines. Separate ground cables shall be installed to conduct all lightning effects from the protection system directly and safely to the site EES. The ARTCC EES shall be designed to have an electrode-to-earth resistance of less than 10.0 ohms to be able to dissipate safely to earth all lightning produced currents and voltages.

a. Air Terminal Zone of Protection. An air terminal shall be mounted at the highest elevation of the part of the structure, or its equipment, to be protected. Required locations of other air terminals are determined by the zone of protection provided by each air terminal, beginning with the highest in elevation. A zone of protection is the concave area between a structure including air terminals and a ball of lightning, of 100 foot radius, as the ball rolls up the structure, over the air terminals, and down the structure. See maximum protection zones using 100 foot radii in Figure 4-14, *Determining Air Terminals for Buildings Under 50 Feet Tall;* Figure 4-15, *Air Terminal Protection on Flat Surfaces;* and Figure 4-16, *Determining Air Terminals for Towers.* A zone of protection from lightning for each structure or group of structures at a site shall conform to FAA-STD-019 and as described in Lightning Protection Code, NFPA-780. Use of 100 foot radius arcs to determine zones of protection provides required protection.

b. Air Terminal Ground Path. Multiple air terminals mounted on top of a structure shall be interconnected by a continuous closed loop system of Thompson No. 506, or equal, bare copper cable around the top of the structure. Each down conductor shall be a class II lightning protection (LP) stranded copper cable, Thompson No. 506 cable or equal. A minimum of two down conductors shall connect the closed loop cable system from opposite corners down to the structure EES to provide at least two dedicated paths to ground from any air terminal. Even a structure with only one air terminal shall have two class II LP copper cable down conductors. Each down conductor shall be exothermically welded to its own ground rod in the structure EES.

FIGURE 4-14. DETERMINING AIR TERMINALS FOR BUILDINGS UNDER 50 FEET TALL

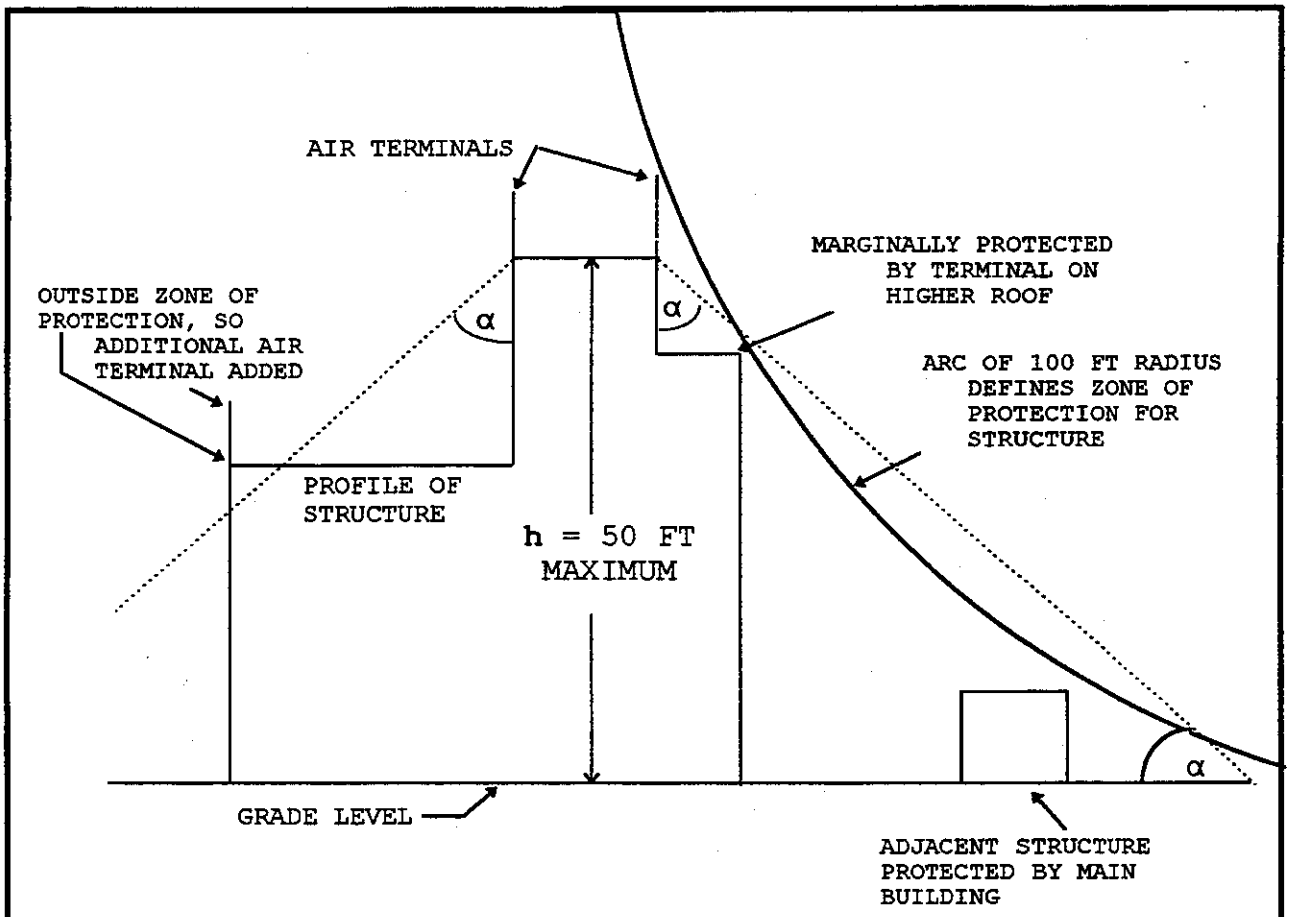

NOTES:

1. α = 45 DEGREES FOR ESTIMATED 1:1 ZONE OF PROTECTION

2. **h** = BUILDING HEIGHT 50 FEET OR LESS

3. MUST BE DRAWN TO SCALE

EXAMPLE IS NOT TO SCALE

FIGURE 4-15. AIR TERMINAL PROTECTION ON FLAT SURFACES

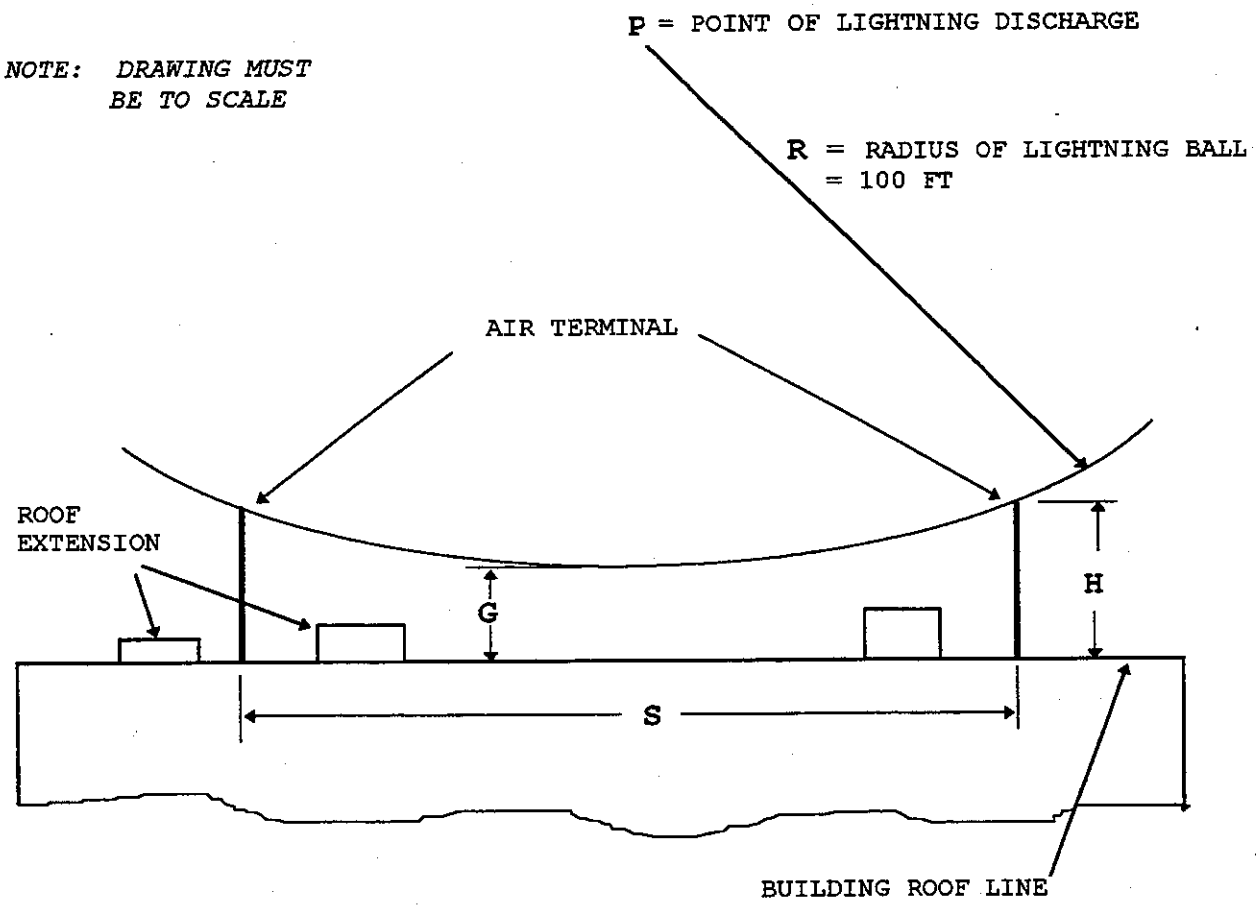

DETERMINATION EQUATIONS:

$$G = H - R + \sqrt{R^2 - (\frac{S}{2})^2}$$

IF: $G = 0$

$$S_{MAX} = 2\sqrt{H(2R - H)}$$

$$H_{MIN} = R - \sqrt{R^2 - (\frac{S}{2})^2}$$

WHERE:

G = PROTECTED HEIGHT ABOVE ROOF MUST BE GREATER THAN ZERO

H = HEIGHT OF AIR TERMINAL

R = 100 FT RADIUS FROM POINT OF LIGHTNING LEADER DISCHARGE

S = SPACING BETWEEN AIR TERMINALS

FIGURE 4-16. DETERMINING AIR TERMINALS FOR TOWERS

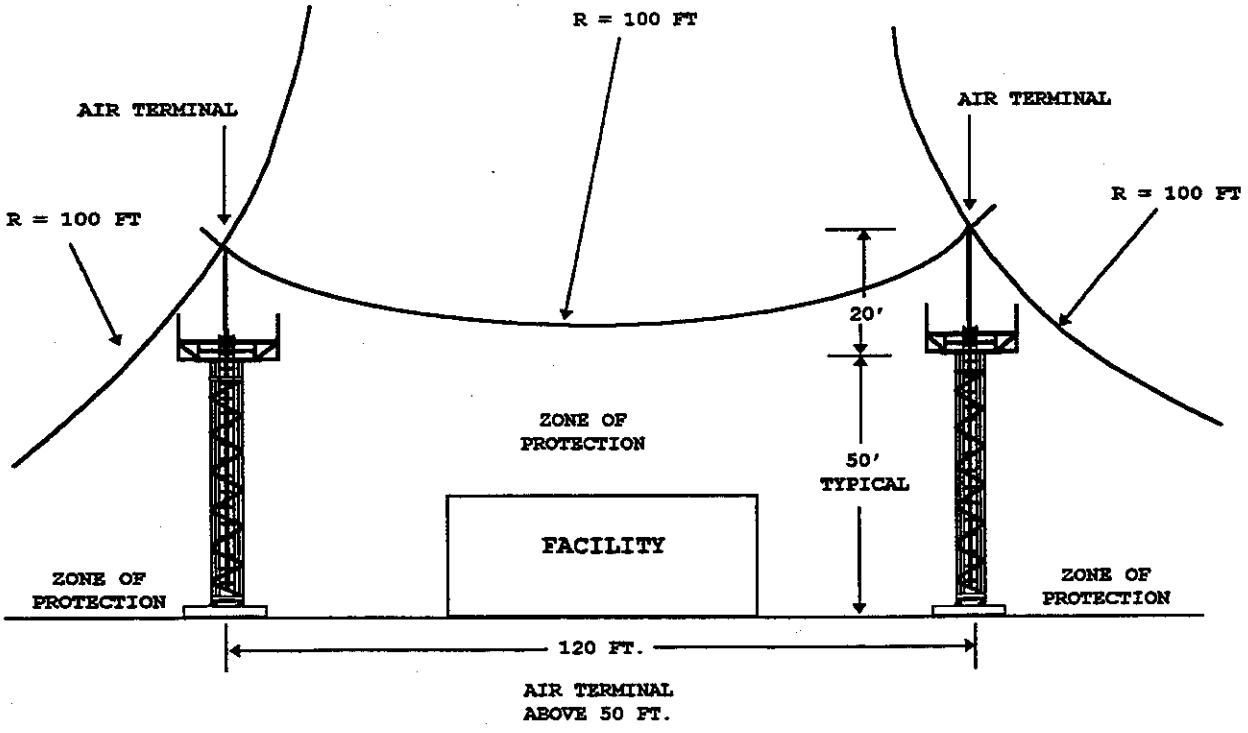

NOTES:

1. R IS THE 100 FOOT RADIUS OF A BALL OF LIGHTNING TOUCHING THE EARTH AND ROLLING OVER THE TOPS OF AIR TERMINALS. THE ARCS DEFINE THE ZONE OF PROTECTION FOR ANTENNAS ON THE TOWERS AND FOR THE BUILDING BETWEEN THE TOWERS.

2. EACH SITE ZONE OF PROTECTION MUST BE DRAWN TO SCALE. (THIS EXAMPLE IS NOT TO SCALE.)

c. Earth Connection. Ground rods, their interconnecting No. 500 MCM stranded copper cables, and other buried or surface conductors in the earth electrode system provide the low resistance electrode-to-earth connection required to dissipate lightning strikes and related transients safely.

102. INSTALLATION. Lightning protection shall be installed for all communications related ARTCC structures, separate facilities, power lines, and landlines to route the voltage and current from lightning strikes safely to earth.

a. Structure Protection Using Air Terminals. Air terminals mounted on a structure shall be solid copper, bronze, or aluminum rods 10 inches long minimum with a rounded tip. Copper rods may be nickel plated. Copper or bronze rods shall be 1/2 inch in diameter and aluminum rods 5/8 inch in diameter. An air terminal shall extend at least 10 inches above the highest point it is protecting. A longer air terminal may be required to provide the zone of protection necessary for a structure. Air terminals over 24 inches long shall be braced at mid point. Bimetallic connectors shall be used to connect dissimilar metals such as aluminum and copper or copper and steel. A tower shall have a minimum of one air terminal.

(1) Air Terminal System. Air terminals on a structure shall be interconnected by a perimeter closed loop cable system on the roof or tower. Interconnecting cable size shall be class II LP, Thompson No. 506, or equal. The cable system shall connect to the base of each air terminal installed on the antenna tower or building. Electrically isolated metal housings on a building roof and other electrically isolated metal, such as roof mounted antenna supports or guy wires, also shall be interconnected to the roof air terminal cable system. A minimum of two class II LP down conductors shall connect each air terminal perimeter cable system to its structure EES.

(2) Structure Down Conductors. A minimum of two exterior bare copper down conductors, Thompson No. 506 cable, or equal, shall be routed down opposite sides of the structure and away from RF and power cables to connect an air terminal ground system to its structure earth electrode system. A structure whose measured perimeter exceeds 250 feet requires one down conductor for every 100 feet of distance. Each down conductor shall be exothermically welded to its ground rod in the structure EES. A metal antenna tower requires two down conductors routed down opposite legs, but not routed with power or RF cables. A

metal tower structure shall be connected by No. 4/0 AWG bare copper wire or strap to its down conductors to enhance structure ground paths; however, a structure shall not serve as a down conductor. Down conductors shall have no loops, kinks, or sharp bends.

(a) Self Supported Towers. Down conductors on a self supported tower are shown in Figures 4-17a and 4-17b, *Tower Grounding and Lightning Protection.* A metal tower whose own structure provides continuous downward electrical paths may be considered a part of, but not a replacement for, the two low resistance down conductors clamped and bonded to opposite legs. Ungrounded legs may be connected to the EES via convenient paths. The tower base plate shall be connected to the structure and grounded to its nearest down conductor, keeping the path through air for the cable as short as possible. Each down conductor shall take a straight downward path with no sharp bends to enter the ground through PVC conduit, or after a conduit bonding plate through ferrous metal conduit, routed directly to a corner ground rod in the tower EES. Each down conductor shall be connected by exothermic weld to its ground rod.

(b) Guyed Towers. Guyed towers have one additional lightning protection requirement. Guy wires consisting of uninsulated conductors and anchors installed to hold a tower erect shall be bonded to ground conductors large enough to conduct lightning from the guy wire array to ground. Guy wires shall be grounded above the turn buckles with wire or strap of the same metal as the guy wires, unless bimetallic connectors are used to isolate dissimilar metals. To avoid sharp bends and wire tension, the grounding wire shall follow a downward curving stepped path as shown in Figure 4-18, *Guyed Tower Grounding and Lightning Protection.* A guy wire may serve as a down conductor for an air terminal on a pole of nonconductive material and shall be connected directly to the EES.

b. Landline Protection. Transmission line and power cables can be protected from lightning strikes and effects in several ways. Installation shall be in accord with FAA-STD-019 and Order 6950.19.

(1) Ferrous Conduit. Buried AC power lines and transmission and control landlines less than 300 feet in length shall be run in grounded, electrically continuous, watertight, ferrous conduit for protection from lightning. Buried landlines shall enter a building through ferrous conduit. Both ends of each ferrous conduit shall be grounded to the site EES. One end of each ferrous conduit is bonded to the EES where the conduit enters the building. The other end of each ferrous conduit must extend a minimum of 5 feet outside the

FIGURE 4-17a. TOWER GROUNDING AND LIGHTNING PROTECTION

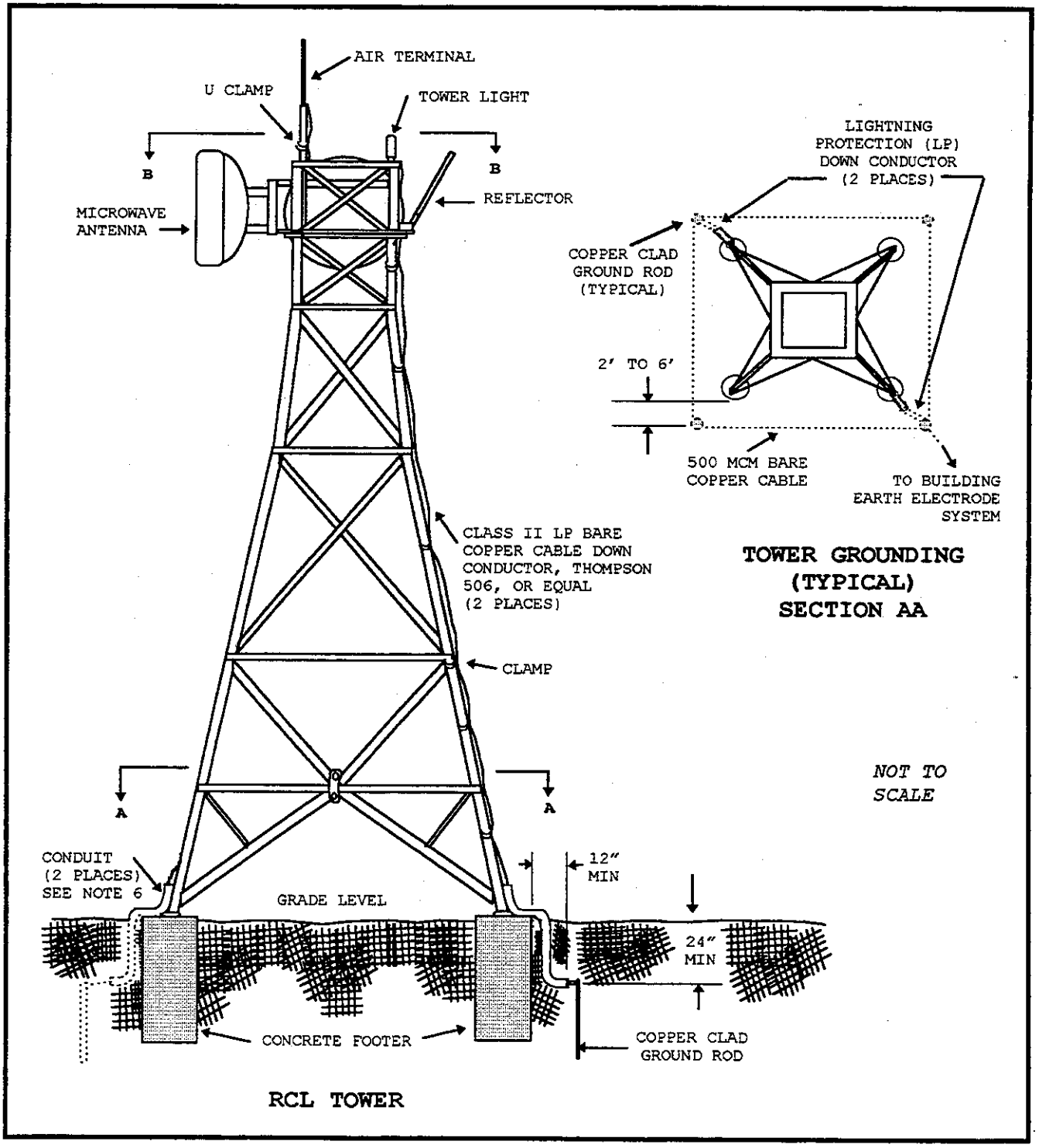

FIGURE 4-17b. TOWER GROUNDING AND LIGHTNING PROTECTION

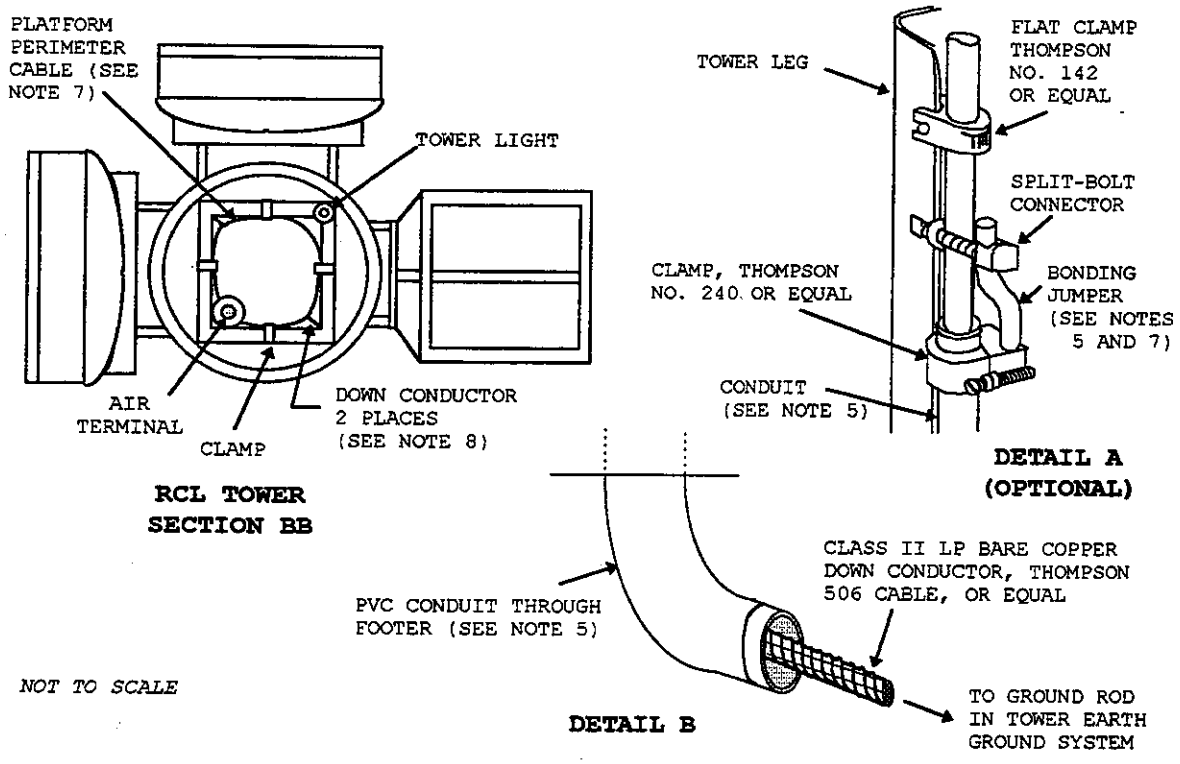

NOT TO SCALE

NOTES:

1. CONDUIT AND DOWN CONDUCTOR BEND ANGLE IS BETWEEN 90 TO 180 DEGREES AND BEND RADIUS 8" MIN.
2. EXTEND CABLES 1" BEYOND TERMINATING CONNECTIONS AND FITTINGS.
3. DISTANCE BETWEEN CLAMPS ATTACHING CONDUCTORS TO TOWER SHALL BE 36" MAX.
4. CLEAN BONDING SURFACES UNDER CLAMPS TO BARE METAL, SECURE HARDWARE, AND WATERPROOF WITH SILICONE SEALING COMPOUND.
5. USE EXISTING STEEL CONDUIT FOR PROTECTION OF DOWN CONDUCTOR AT GRADE LEVEL, AS SHOWN. FOR CONDUIT REPLACEMENT OR NEW CONSTRUCTION, USE SCHEDULE 40 PVC CONDUIT AND OMIT BONDING JUMPER AND FITTINGS. ROUTE CONDUIT THROUGH CONCRETE FOOTINGS FOR NEW CONSTRUCTION.
6. INSTALL BURIED CABLE 2 FEET BELOW GRADE AND 2 TO 5 FEET FROM TOWER BASE.
7. USE THOMPSON NO. 506 CABLE , OR EQUAL, FOR PLATFORM PERIMETER CABLE AND BONDING JUMPERS. A PLATFORM PERIMETER CABLE PROVIDES TWO CONDUCTIVE PATHS TO EACH DOWN CONDUCTOR.
8. INSTALL TWO DOWN CONDUCTORS ON THREE AND FOUR LEG TOWERS. ROUTE CONDUCTORS DOWN OPPOSITE LEGS OF FOUR LEG TOWERS. DO NOT ROUTE DOWN CONDUCTORS WITH ELECTRICAL CABLES.
9. BOND STRUCTURE, METAL CONDUIT, AND ANTENNA SUPPORTS TO DOWN CONDUCTORS USING CLAMPS, BONDING JUMPERS, AND FITTINGS.
10. TO REDUCE RESISTANCE, LENGTHEN GROUND RODS BY INSTALLING ADDITIONAL GROUND ROD SECTIONS AS NECESSARY, OR EXTEND RODS INTO PERMANENT MOISTURE BEARING SOIL OR INTO THE WATER TABLE.
11. CONNECT TOWER ELECTRODE GROUNDING SYSTEMS TO THE ARTCC EARTH ELECTRODE GROUNDING SYSTEM USING 500 MCM BARE COPPER CABLE BURIED 2 FEET MINIMUM BELOW GRADE. USE EXOTHERMIC WELDS OR EQUAL CONNECTIONS.
12. WHERE EXISTING TOWERS ARE INDIVIDUALLY GROUNDED AND EACH TOWER GROUND RESISTANCE IS SATISFACTORY (10.0 OHMS OR LESS), INTERCONNECTING THE TOWER ELECTRODE GROUND SYSTEMS WITH BURIED 500 MCM COPPER CABLE IS NOT REQUIRED.
13. MISCELLANEOUS HARDWARE SHALL BE COPPER, BRONZE, OR STAINLESS STEEL.

FIGURE 4-18. GUYED TOWER GROUNDING AND LIGHTNING PROTECTION

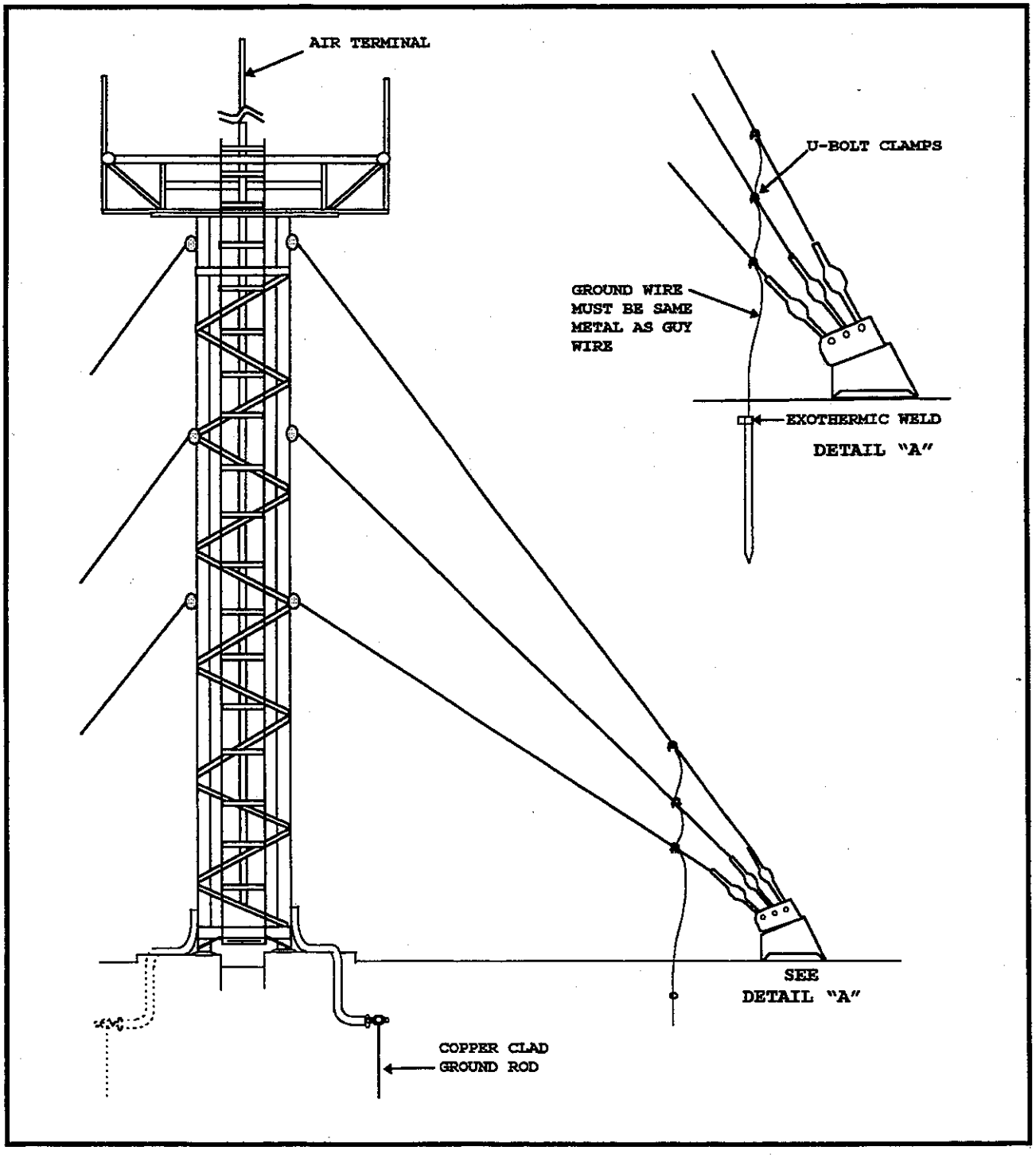

structure EES and be bonded directly to the EES with a No. 2/0 AWG stranded bare copper conductor.

(2) Buried Guard Wire. A buried landline cable, with more than 3 feet of length not completely enclosed in ferrous conduit, shall have a No. 6 AWG minimum (or new requirement 1/0 AWG) solid bare copper guard wire buried a minimum of 10 inches above and in line with the cable to protect the cable from lightning damage. The guard wire shall be connected to earth ground at each end and to a ground rod every 300 feet when the wire length exceeds 300 feet. Buried cable spreads which exceed 3 feet in width require two or more guard wires as shown in Figure 4-19, *Guard Wire Lightning Protection for Underground Cables*.

(3) Transmission Line Shield Grounding. Shields of axial type cables shall be grounded as follows. Each cable shield shall be bonded to the lightning protection grounding system near the base of its antenna. The cable shield also shall be bonded to the site EES as close to the base of the antenna tower as possible. The cable shall enter the facility through a transient suppressor mounted inside the facility on a metal bulkhead plate where the axial cable enters the facility. This plate shall be connected direct to the facility EES with a No. 2/0 AWG cable.

(4) Transient Suppressors. Transient suppressors shall be installed to protect antenna coaxial cables, control lines, and other communication landlines exposed to lightning effects. Transient suppressors for axial lines shall be mounted on a metal bulkhead plate where the lines enter the facility. This plate shall be connected to the EES with a No. 2/0 AWG cable. Transient suppressors for signal and control wires shall be mounted at or near the point where the wires enter the facility. Transients shall be conducted by a No. 2/0 copper cable directly to a ground rod in the building EES.

c. Power Line Surge Arresters. An AC power surge arrester shall be mounted on each incoming AC power and neutral line on the supply side at the facility main service disconnect switch in accordance with FAA-STD-019. Surges shall be conducted by a ground cable directly to a ground rod in the EES.

103.-107. RESERVED.

FIGURE 4-19. GUARD WIRE LIGHTNING PROTECTION FOR UNDERGROUND CABLES

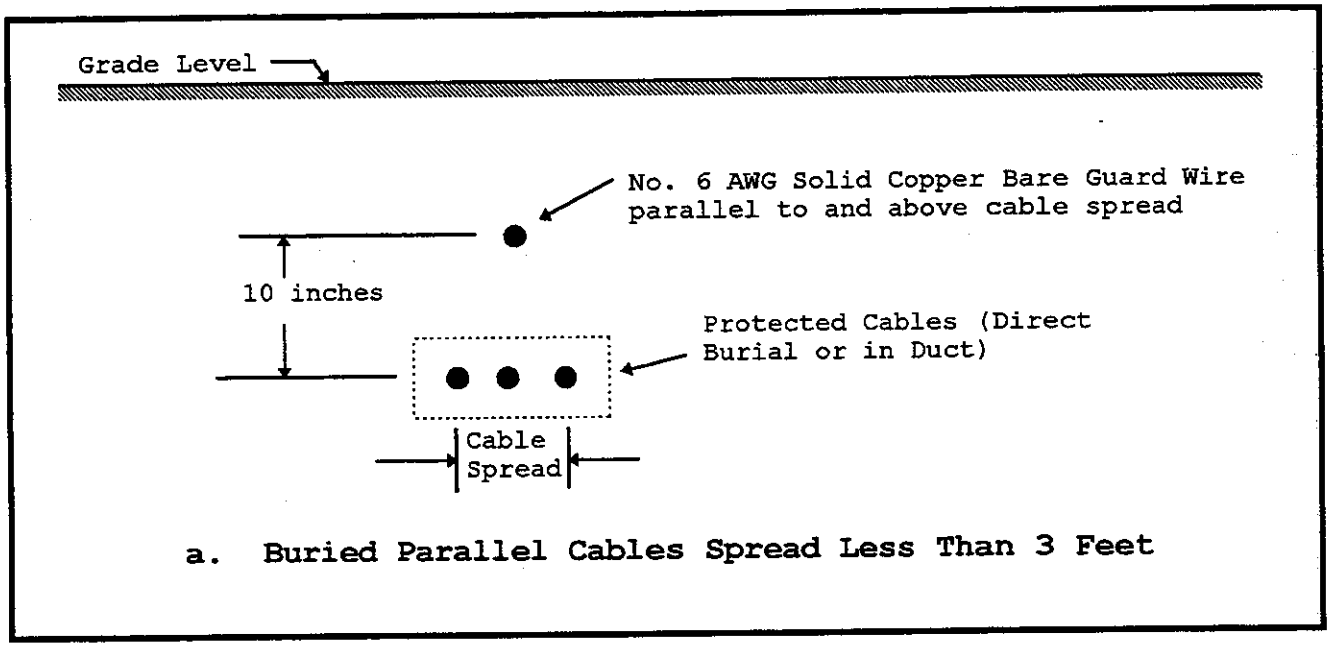

a. Buried Parallel Cables Spread Less Than 3 Feet

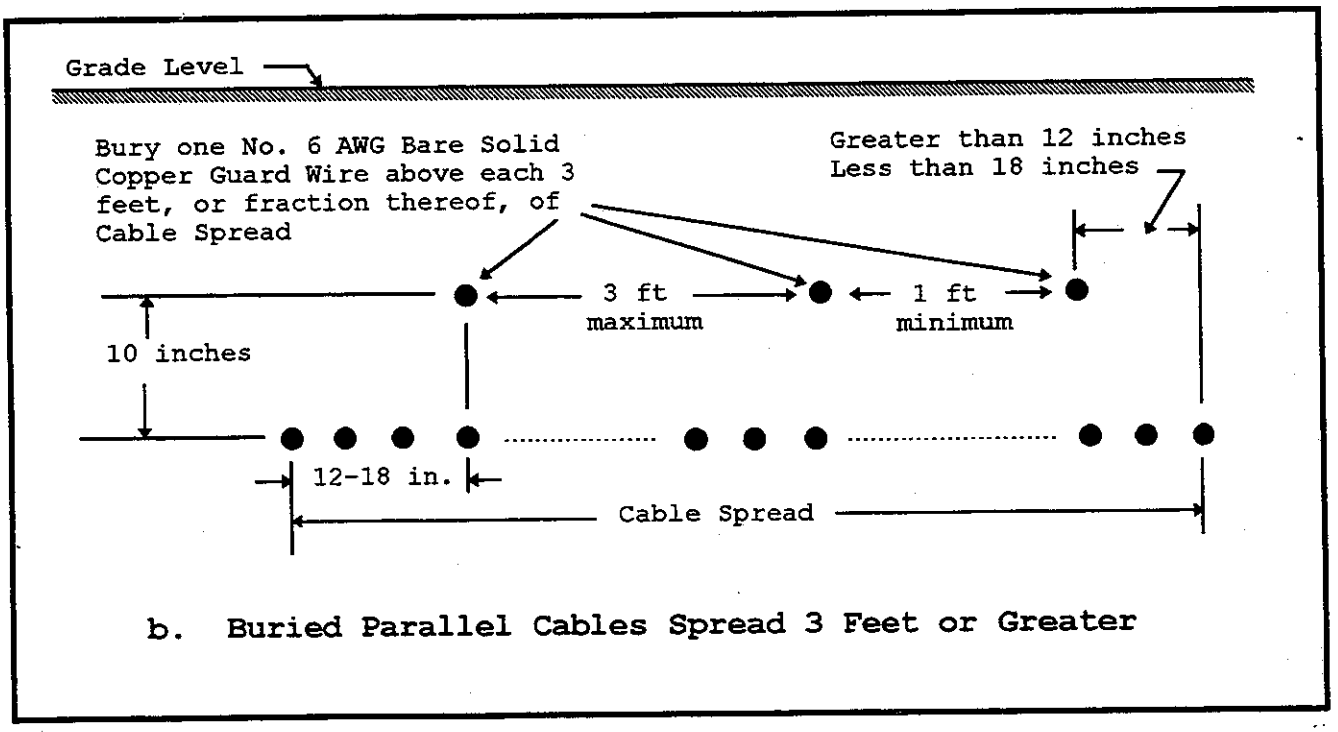

b. Buried Parallel Cables Spread 3 Feet or Greater

SECTION 4. MULTIPOINT GROUND SYSTEM

108. REQUIREMENTS. Each ARTCC facility shall provide a multipoint ground system that interconnects all normally ground potential, non-current-carrying metal objects within the building to form a mesh of low impedance electrical paths to the EES. System elements include equipment frames, cabinets, racks, signal reference grids (SRG), interior conduits, wireways, cable trays, outer cable shields, steel structure, and the bonds and conductors which interconnect these metal parts into one continuous network. This system grounds metal elements within the facility to interconnected multipoint ground plates and other points of connection to the multipoint ground system to provide redundant safe low resistance paths to the EES.

109. INSTALLATION. An ARTCC multipoint ground system shall be installed in all areas containing electronic equipment used in direct support of the NAS. Multipoint ground systems include interconnected plates and other points of connection for electronic equipment. At least two paths to the EES are required for each plate or point of connection. In electrically continuous steel structures, each multipoint ground and branch plate shall be connected to the building structural steel. The multipoint ground system shall be isolated from the single point ground system, except at the ARTCC main ground plate/bus in the critical power vault. From the main ground plate/bus both systems share cables directly to the EES. An AC protection ground, identified by plain green insulation, shall maintain a separate path within each facility and shall connect to the EES only as required by NFPA-70, *National Electrical Code*, Article 250. Separation of these three grounding systems minimizes sharing interfering transient currents, potentials, and faults.

a. Multipoint Ground Plate. A multipoint ground plate or branch plate shall be a copper plate, at least 6 inches by 4 inches by 1/4 inch, mounted on insulated spacer material and secured with insulated hardware as shown in Figure 4-20, *Multipoint Ground Plate*. The plate shall have a nonconductive, labeled, protective cover which extends beyond the plate edges 1 inch on each side and is mounted on insulated spacers. Each multipoint ground plate or bus shall display a permanent nonconductive label that is color coded green with bright orange slashes. The label shall read CAUTION ELECTRONIC MULTIPOINT GROUND in black characters. Each multipoint ground plate or branch plate shall have a minimum of two independent paths to the facility EES either through cabling or through properly grounded building steel.

FIGURE 4-20. MULTIPOINT GROUND PLATE

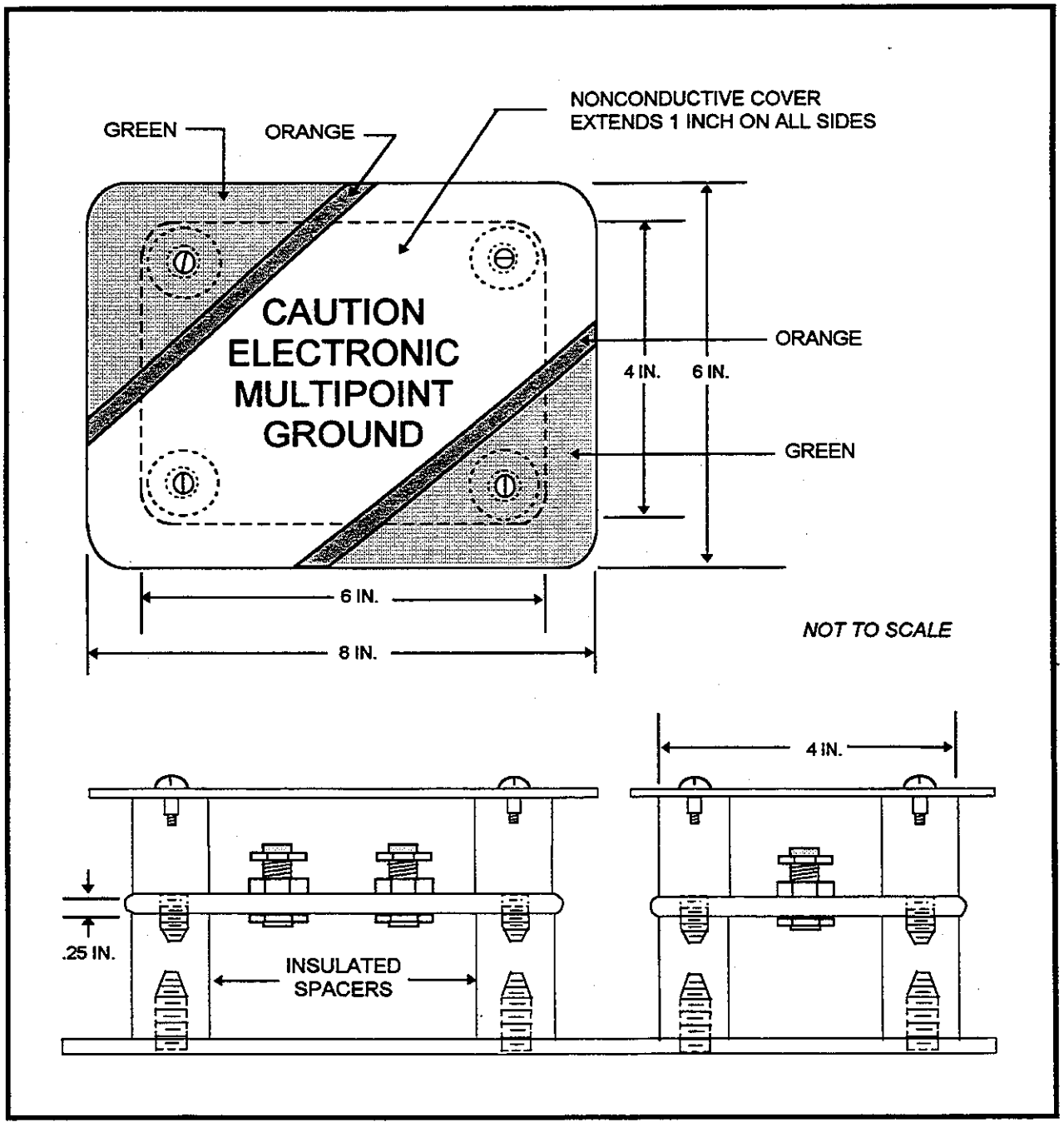

b. Multipoint Branch Ground Plates. Multipoint branch ground plates shall be used to minimize the number of independent wire runs to a multipoint ground plate. The quantity and location of branch plates depend upon site requirements. Branch plates shall be installed with insulated spacers and hardware the same as a multipoint ground plate. An illustration of a facility multipoint ground system is shown in Figure 4-21, *Multipoint Ground Installation.*

c. Signal Reference Grid (SRG). An SRG is installed below the raised floor in a computer or digital equipment room to provide a low impedance ground reference for high frequency, low current digital signals radiated from the equipment. A grid of 2 inch wide, 26 AWG gauge thick strips, or equal, on 2 foot centers, interconnected by exothermic welds at each joint or crossover, is recommended to provide a continuous equipotential ground plane. Every sixth raised floor pedestal in each direction shall be connected to the SRG using No. 6 AWG concentric copper wire. All connections to pedestals and the SRG shall be by exothermic weld. All metal columns, conduits, water pipes, ducts, etc. in the room also shall be bonded by exothermic weld to the SRG. A long run of metal shall be bonded at both ends to the SRG. All equipment cabinets in the room shall be bonded to the SRG using low impedance conductors. The SRG shall be connected to the multipoint ground system by exothermic welds.

d. Multipoint Ground Conductors. Multipoint ground conductors shall be copper cable, strap, or bus bar sized in accordance with the requirements of FAA-STD-019 to provide a low resistance path to the EES. Some multipoint conductor sizes and maximum lengths are listed in Table 4-2, *Multipoint Ground Conductor Sizes.* Conductor properties and capacity information are found in Order 6950.20 and FAA-STD-019. A multipoint bus bar is installed directly on each equipment rack frame. Equipment frames, chassis, cabinets, racks, and electrically continuous sections of conduit, wireway, and cable trays also shall be connected separately to a multipoint ground conductor.

(1) 'Daisy Chaining'. Grounding several pieces of equipment in series is called 'daisy chaining'. Only if necessary should equipment be grounded in a 'daisy chain' pattern. One end of each multipoint 'daisy chain' conductor shall terminate on a branch multipoint ground plate.

(2) Color Coded Conductors. Multipoint ground system conductors shall be insulated and shall be color coded green with an orange tracer. Color coding shall be visible on any cable that is

FIGURE 4-21. MULTIPOINT GROUND INSTALLATION

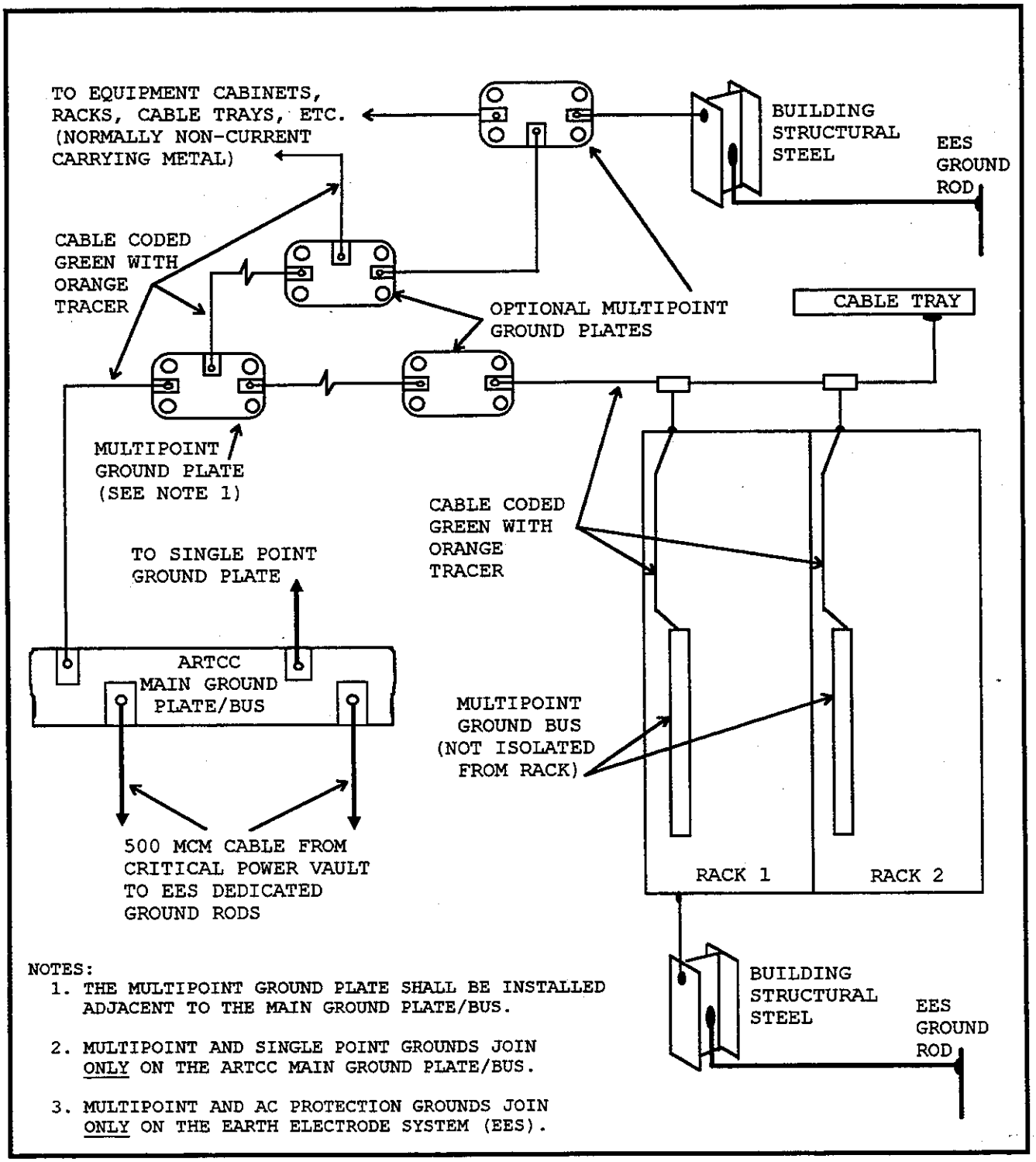

NOTES:

1. THE MULTIPOINT GROUND PLATE SHALL BE INSTALLED ADJACENT TO THE MAIN GROUND PLATE/BUS.
2. MULTIPOINT AND SINGLE POINT GROUNDS JOIN <u>ONLY</u> ON THE ARTCC MAIN GROUND PLATE/BUS.
3. MULTIPOINT AND AC PROTECTION GROUNDS JOIN <u>ONLY</u> ON THE EARTH ELECTRODE SYSTEM (EES).

TABLE 4-2. MULTIPOINT GROUND CONDUCTOR SIZES

Cable Size	Path Length Maximum		Bus Bar Size		Path Length Maximum	
	Ft.	(m)	Inch	(mm)	Ft.	(m)
750 MCM*	375	(114.3)	4 x 1/4	(100 x 6.4)	636	(193.9)
600 MCM*	300	(91.4)	4 x 1/8	(100 x 3.2)	318	(96.9)
500 MCM	250	(76.2)	3 x 1/4	(75 x 6.4)	476	(145.1)
350 MCM	175	(53.3)	3 x 1/8	(75 x 3.2)	238	(72.5)
300 MCM	150	(45.7)	2 x 1/4	(50 x 6.4)	318	(96.9)
250 MCM	125	(38.1)	2 x 1/8	(50 x 3.2)	159	(48.5)
4/0 AWG	105	(32.0)	2 x 1/16	(50 x 1.6)	79	(24.1)
3/0 AWG	84	(25.6)	1 x 1/4	(25 x 6.4)	159	(48.5)
2/0 AWG	66	(20.1)	1 x 1/8	(25 x 3.2)	79	(24.1)
1/0 AWG	53	(16.2)	1 x 1/16	(25 x 1.6)	39	(11.9)
1 AWG	41	(12.5)				
2 AWG	33	(10.1)				
4 AWG	21	(6.4)				
6 AWG	13	(4.0)	(Minimum size multipoint ground cable)			
8 AWG	8	(2.4)	(Low capacity special use only)			

MCM* - Where these cables are not available, parallel cables may be used, such as three 250 MCM cables in place of one 750 MCM cable or two 300 MCM cables in place of one 600 MCM cable.

always in view and also where seen by opening any cover on a raceway or wireway containing a multipoint ground cable.

e. 'Chassis Ground' Equipment CAUTION. The multipoint ground system is not designed to be a signal return path. However, some equipment uses its internal chassis as a signal return path, which acts like a floating ground and is referred to as a 'chassis ground.' Without electrical isolation of the chassis from its equipment case, the case voltage level floats also. Equipment with an AC power cord plug having no third prong for a protection ground should be tested for a floating ground on the case before being placed into service. A 'chassis ground' level can vary substantially from earth ground to reach a voltage level that can cause an electrostatic discharge to nearby personnel and can shut down equipment. If it is necessary to use equipment which has such a 'chassis ground', the equipment case shall be isolated from the multipoint ground system.

f. Multipoint Conductor Bolted Connections. The connection from a multipoint ground cable to a metal cabinet or other element in the system shall be via a pressure type connector of the type shown in Figure 4-22, *Split-Bolt Ground Connection*. Paint or any nonconductive finish shall be removed from under and around each bolt area to provide good metal to metal electrical contact. Minimum torque requirements for tightening bolts are listed in FAA-STD-019.

g. Structures. Structural steel members of a steel-framed building shall be joined to be electrically continuous. The resistance through each structural steel joint shall measure one milliohm or less through the junction. These joints shall be welded, brazed, or bolted. Where measured junction resistance is not low enough, one or more conductors shall be installed to bridge across the joint in order to reduce the joint resistance to the required level. The structure shall be connected directly to the earth electrode ground system at intervals averaging less than 60 feet, or approximately every other structural column, through No. 4/0 AWG copper conductors in accord with FAA-STD-019. Metal building elements which are over 3 feet long and are electrically isolated shall be connected to the multipoint ground system.

110.-115. RESERVED.

FIGURE 4-22. SPLIT-BOLT GROUND CONNECTION

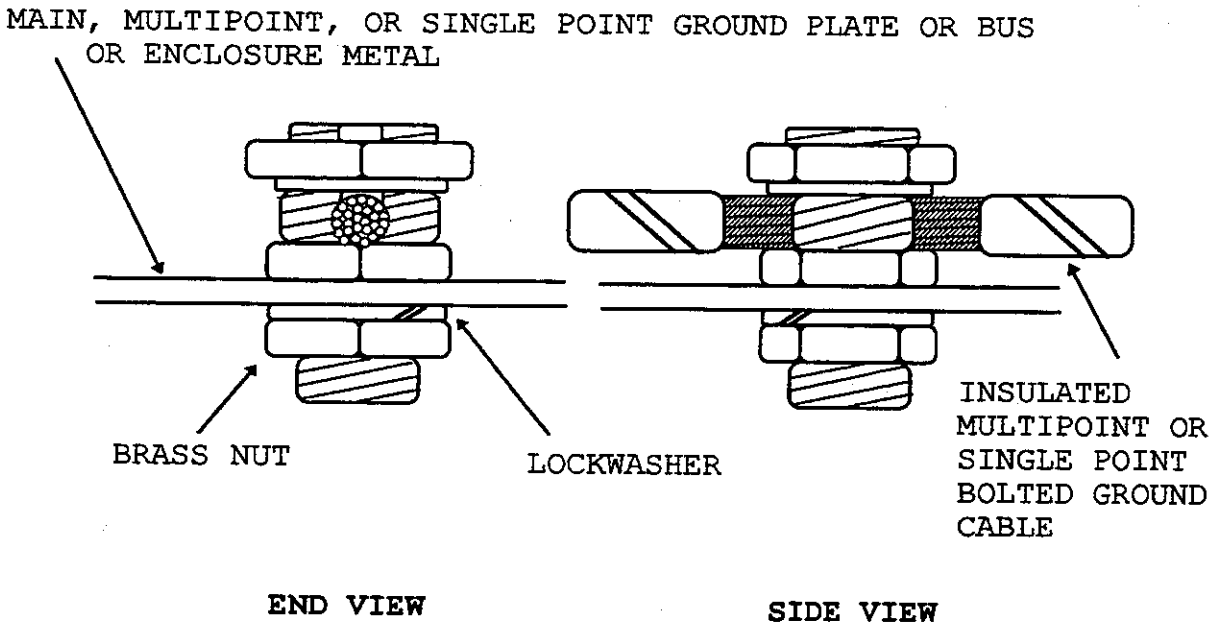

NOTES:

1. CONNECTOR TYPE IS BURNDY KC22, OR EQUAL
2. USE STUDDED SPLIT-BOLT CONNECTOR, NO. 2 AWG MINIMUM WIRE SIZE, AND BONDING LUG FOR ALL GROUND PLATES
3. MULTIPOINT GROUND CABLES ARE CODED GREEN WITH ORANGE TRACER
4. SINGLE POINT GROUND CABLES ARE CODED GREEN WITH YELLOW TRACER

SECTION 5. SINGLE POINT GROUND SYSTEM

116. REQUIREMENTS. Separate analog and digital single point ground systems shall provide ground references for cable shields on audio communication, digital data, and control cables. Each analog and digital single point ground system shall be electrically isolated from the multipoint ground until termination on the EES. Each candidate shield shall be disconnected at each end and then grounded from one point only to an electrically isolated single point system ground bus (or lug) that is connected to only one single point ground plate. Digital (analog) single point ground system branches shall ground only digital (analog) signal shields. Physical locations of analog and digital equipment areas will dictate the number of branches needed in a system. All single point ground system branches terminate, with no loops, either on the single point ground plate at the ARTCC main ground plate/bus connected to the EES or for a shorter path directly on the EES. See single point ground configurations in Order 6950.20.

a. Single Point System Branches. Each branch of the isolated single point ground system shall connect its single point branch plates in series paths like branches of a tree, with no loops. Each single point ground bus shall be connected to a single point branch plate directly. Single point ground buses are copper bars installed in and isolated electrically from the audio communication or digital data equipment cabinets or junction boxes in which they are installed to connect only one end (single point) of each continuous analog or digital cable shield to the single point ground branch.

b. Single Point Ground Conductors. Cables which connect the single point main and branch ground plates and buses and the single point ground connection on the ARTCC main ground plate/bus shall be insulated copper conductors color coded green with a yellow tracer. Color coding shall be visible on any cable in view and by opening any cover on a raceway or wireway containing a multipoint cable. Single point ground cables are sized for run length and electrical resistance in accord with FAA-STD-019 and Order 6950.20. Branch plates shall be used as needed in order to minimize cable length in the isolated, non-looped, single-ended, tree configuration of the single point ground system.

117. INSTALLATION. One or more branches of the single point ground system shall be dedicated to only digital communication and control equipment cable shields. Digital branches shall be routed separate from branches dedicated to analog communication and control equipment cable shields. Special care must be taken to protect digital grounds from coupled, conducted, or radiated interference. Digital and analog

single point ground branches join only at the single point ground plate just before the ARTCC main ground plate/bus in the critical power vault.

a. Isolation of Single Point Ground. The single point ground system shall be isolated from the multipoint ground system by 10 megohms, except on the ARTCC main ground plate/bus in the critical power vault, and shall be isolated by 10 megohms from the AC power ground except on the EES. Single point and multipoint ground systems share conductors only from the ARTCC main ground plate/bus to the EES.

b. Single Point Ground Plate. A single point ground, or branch, plate shall be a copper plate at least 6 inch by 4 inch by 1/4 inch mounted on insulated spacer material and secured with insulated hardware as shown in Figure 4-23, *Single Point Ground Plate*. The plate shall have a labeled protective cover which extends beyond the plate edges 1 inch on each side. Each single point ground plate or bus shall display a permanent non-conductive label that is color coded green with bright yellow slashes. The label shall read CAUTION ELECTRONIC SINGLE POINT GROUND in black characters.

c. Single Point Ground Bus. A solid copper single point ground bus shall be mounted horizontally in each applicable equipment cabinet and be labeled appropriately. The typical size of a single point ground bus bar is 3/4 inch wide, 1/4 inch thick, and 16 inches long. Each ARTCC single point ground bus shall be installed on insulated standoffs with insulated hardware to provide complete isolation of the bus from the cabinet and all other grounds. Each single point ground cable from a cabinet or junction box shall connect directly to the single point ground plate or to a single point branch plate as shown in Figure 4-24, *Single Point Ground Installation*.

d. Equipment Shield Terminations. To minimize interference and prevent ground loops in the single point ground system, each digital or analog equipment cable shield shall be electrically isolated, and only one end, the source end if possible, shall connect to the single point ground system. The other end of each of these cable shields shall remain unterminated. Shield pigtails terminated on a single point ground bus or plate shall be as short as possible to minimize inductance. Each unshielded conductor length shall be as short as possible and shall not exceed 1 inch. A shield pigtail may exceed 1 inch if necessary. Coaxial RF cable shields shall not terminate on the single point ground system.

118.-122. RESERVED.

FIGURE 4-23. SINGLE POINT GROUND PLATE

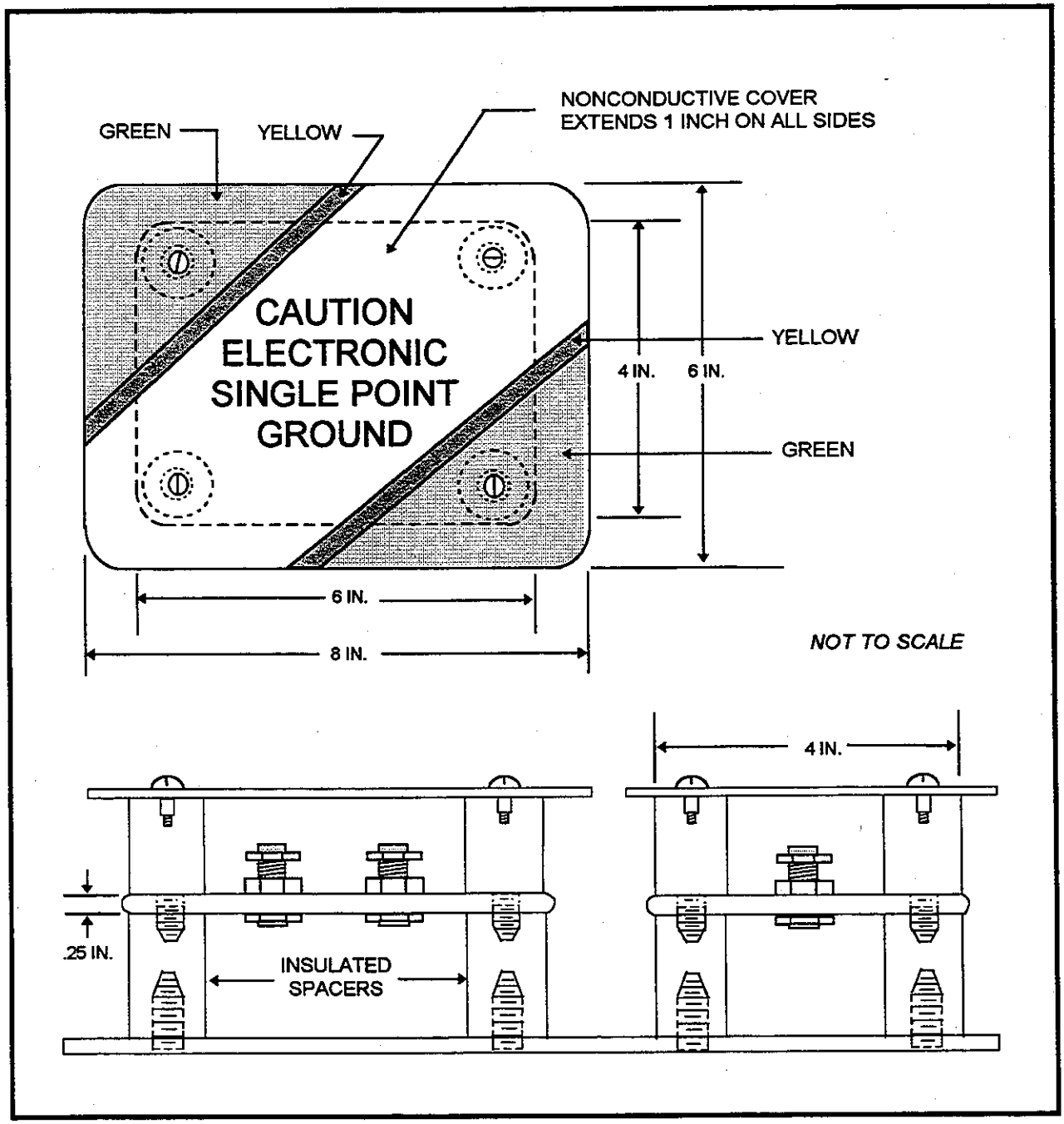

FIGURE 4-24. SINGLE POINT GROUND INSTALLATION

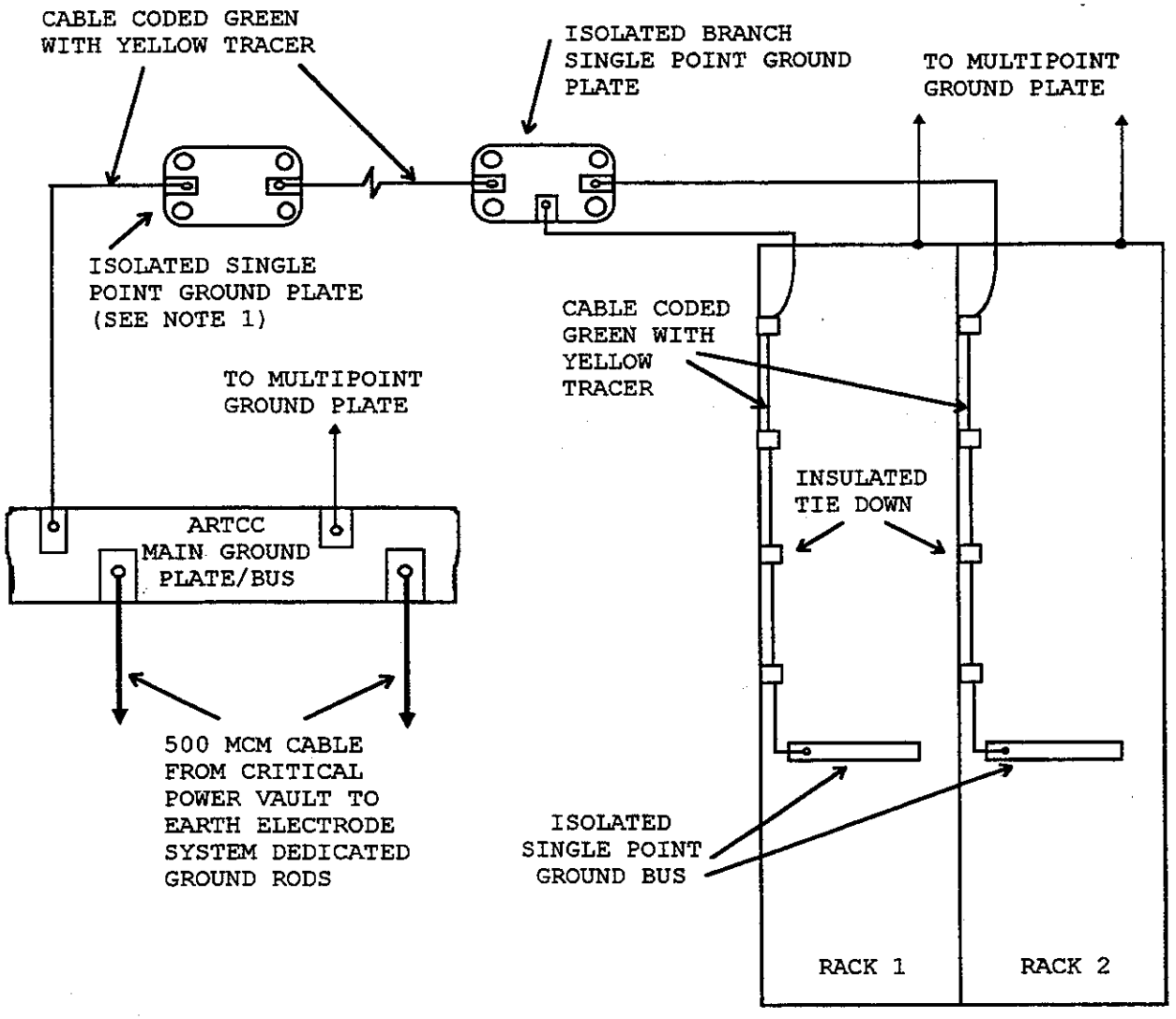

NOTES:

1. THE SINGLE POINT GROUND PLATE SHALL BE INSTALLED ADJACENT TO THE MAIN GROUND PLATE/BUS.
2. SINGLE POINT AND MULTIPOINT GROUNDS JOIN ONLY ON THE ARTCC MAIN GROUND PLATE/BUS.
3. SINGLE POINT AND AC GROUNDS JOIN ONLY ON THE EARTH ELECTRODE SYSTEM.

SECTION 6. TRANSIENT AND SURGE PROTECTION SYSTEMS

123. REQUIREMENTS. An operating system comprised of electrical power, communication, and electronic equipment is susceptible to two types of lightning effects. The two types are surges on AC power lines and transients on signal and control landlines. Both effects can occur on external lines connected between a building and a nearby structure, another facility, or external equipment. Damage from lightning can be minimized, and in most cases eliminated, by properly installing and maintaining the lightning protection described herein, in FAA-STD-019, and in FAA-STD-020.

124. AC POWER PROTECTION. Protection from AC power surges caused by lightning or faults external to the ARTCC shall be provided by the use of surge arrester devices on incoming AC power lines at the facility service disconnect switch and on the primary side of each FAA owned distribution transformer. See AC surge arrester installation for grounded or ungrounded AC service in Order 6950.19. A surge arrester limits the voltage supplied to a facility by shunting excess current to earth until surges are dissipated. Arrester devices shall be sized to clamp the AC voltage supplied to the ARTCC at an acceptable level. Ratings for these devices are found in FAA-STD-019 and FAA-STD-020.

a. Pre-installation Tasks. An existing facility will require the following major actions prior to installation of lightning and electrical surge protection devices on AC power lines.

(1) Evaluation of Existing Surge Protection. Determine if the ARTCC AC power circuits have surge protection devices already installed at the main service disconnect switch. If the protection equipment is installed properly, is operating satisfactorily, and has operating parameters required for the ARTCC and acceptable for expected loading of each circuit, no further action is required.

(2) Voltage and Phase of AC Power Service. If a new surge arrester is required, determine if commercial power supplied is 277 VAC grounded neutral or 480 VAC ungrounded service. Select and obtain a surge arrester that is compatible with the facility 3-phase entrance power, expected loading, and necessary response time. More specific guidance is provided in FAA documents FAA-C-1217, *Electrical Work, Interior*; FAA-STD-019; and Order 6950.19.

(3) Coordination of System Shutdown. Request the issuance of a NOTAM to coordinate shutdown of affected ARTCC systems with all facilities affected. Ensure that all systems receiving primary AC

power via the ARTCC service disconnect switch can be removed properly from service. Certain systems may continue to operate satisfactorily from standby power during the estimated number of hours required for system downtime. However, coordination with operating personnel is required for all systems whether or not standby power is available.

(4) Location of Surge Arresters. Surge arrester devices are required on the supply side of the main service disconnect switch to protect each incoming AC power line. Therefore, an arrester junction box shall be located immediately adjacent to the main AC service disconnect, less than 1 foot away. If an arrester junction box cannot be mounted directly adjacent to the main service disconnect switch as illustrated in Figure 4-25, *AC Surge Arrester Installation, Grounded AC Service*, or Figure 4-26, *AC Surge Arrester Installation, Ungrounded AC Service*, site adaptation will be required.

b. Installation Tasks. All arrester devices shall be isolated from the arrester junction box by a minimum resistance of 10 megohms. The arrester ground which carries away excess current also shall be isolated and connected as directly as possible to a ground rod in the EES. With grounded AC service, the arrester ground may be connected to the main service disconnect earth grounded neutral bus by a stranded copper conductor with 600 volt insulation color coded white. In this case, the arrester shares the conductor from the bus directly to the EES. Conductors to phase arresters shall be No. 4 AWG wire minimum and shall be as short as possible with no loops or sharp bends. The arrester junction box shall be connected separately to the grounded neutral bus in the main service disconnect by No. 6 AWG copper wire with green insulation.

(1) Operating Systems Outage. The team supervisor shall request the issuance of a NOTAM to inform the ARTCC and all affected facilities of the outage schedule to coordinate shutdown or transfer to standby power as necessary for the AC power outage duration.

(2) AC Entrance Power. AC entrance power shall be removed to install surge arresters on the supply (line) side of the facility main service disconnect switch. Power may be removed at an FAA owned distribution transformer or by the commercial power company. If removing AC service is not possible, open the facility main service disconnect switch and install the arresters immediately after the main service disconnect switch but BEFORE the fuses in the load lines.

CAUTION: Verify that AC power is removed before proceeding. Be very cautious when working near commercial AC power service, on or off.

FIGURE 4-25. AC SURGE ARRESTER INSTALLATION, GROUNDED AC SERVICE

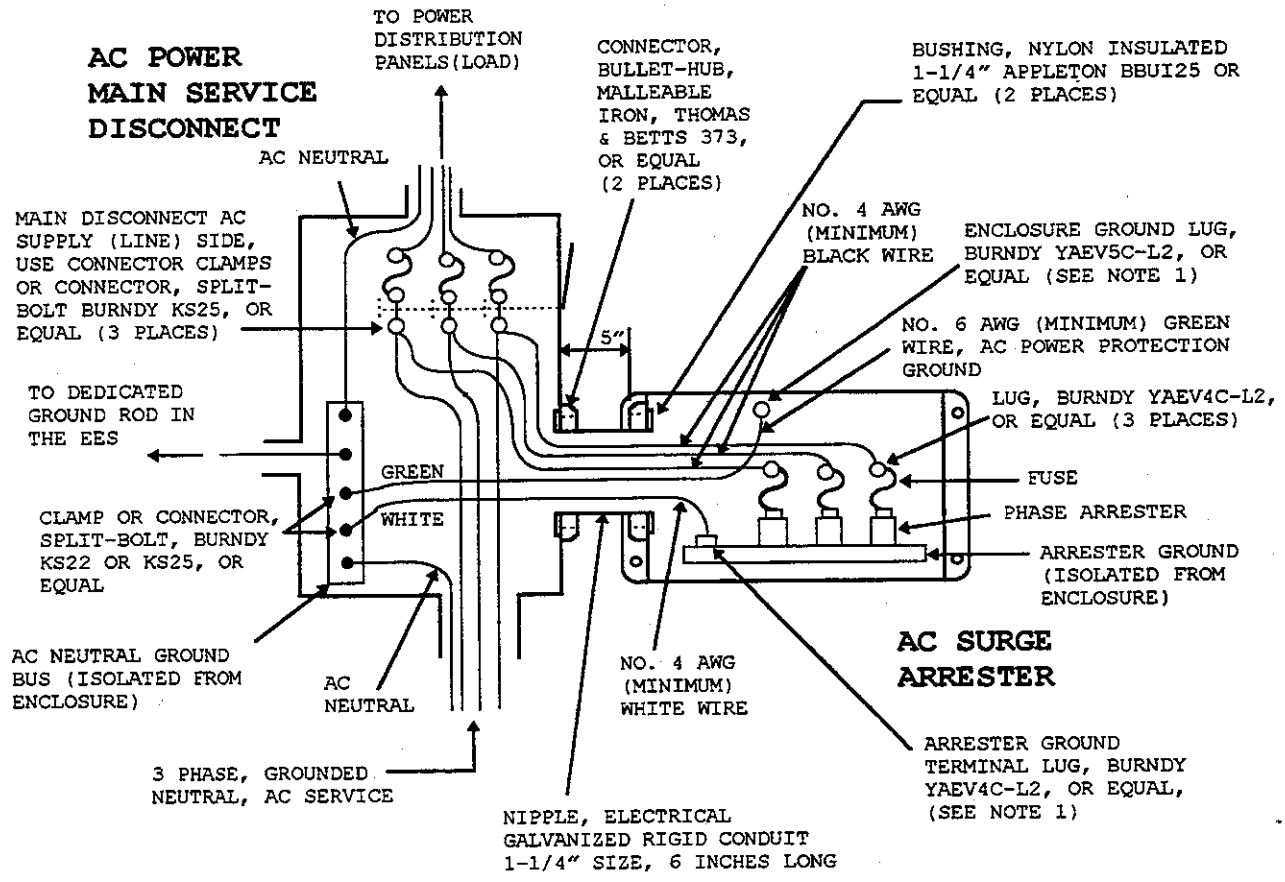

NOTES:

1. ARRESTER GROUND TERMINAL (WHITE WIRE) MUST BE ISOLATED FROM ARRESTER ENCLOSURE GROUND TERMINAL (GREEN WIRE) EXCEPT AT AC NEUTRAL GROUND BUS.

2. **ONLY** IF NOT FEASIBLE TO REMOVE AC POWER FROM SUPPLY (LINE) SIDE OF MAIN DISCONNECT (FOR EXAMPLE, POWER REMOVAL CREATES POWER OUTAGE FOR UTILITY COMPANY), CAREFULLY CONNECT NO. 4 AWG BLACK WIRES ON LOAD SIDE OF MAIN DISCONNECT **BEFORE FUSES** IN LOAD LINES. USE **CAUTION** NEAR AC POWER.

3. 3 PHASE ARRESTERS SHOWN. DELETE 1 EACH PHASE ARRESTER AND FUSE FOR 1-PHASE, 3-WIRE SERVICE, OR DELETE 2 EACH PHASE ARRESTERS AND FUSES FOR SINGLE PHASE ARRESTER SERVICE.

FIGURE 4-26. AC SURGE ARRESTER INSTALLATION, UNGROUNDED AC SERVICE

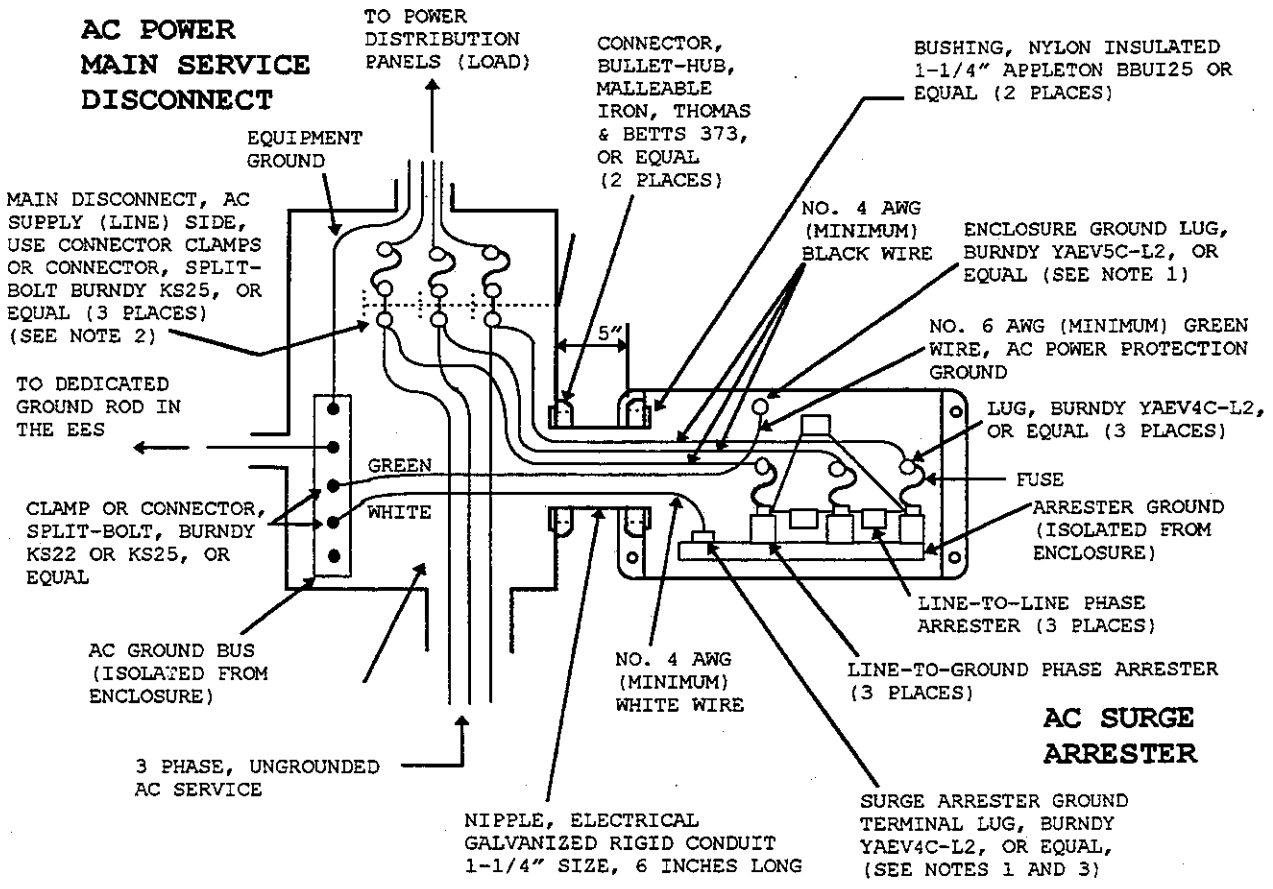

NOTES:

1. ARRESTER GROUND TERMINAL (WHITE WIRE) MUST BE ISOLATED FROM ARRESTER ENCLOSURE GROUND TERMINAL (GREEN WIRE) EXCEPT AT AC GROUND BUS.

2. **ONLY** IF NOT FEASIBLE TO REMOVE AC POWER FROM SUPPLY (LINE) SIDE OF MAIN DISCONNECT (FOR EXAMPLE, POWER REMOVAL CREATES POWER OUTAGE FOR UTILITY COMPANY), OPEN MAIN DISCONNECT TO INSTALL SURGE ARRESTERS. CAREFULLY CONNECT CORRECTLY SIZED BLACK WIRES ON LOAD SIDE OF MAIN DISCONNECT **BEFORE FUSES** IN LOAD LINES. USE **CAUTION** NEAR AC POWER.

3. ARRESTER GROUND CAN BE CONNECTED TO A DEDICATED GROUND ROD IN THE EES DIRECTLY OR VIA THE GROUND BUS IN THE AC POWER MAIN SERVICE DISCONNECT.

(3) Arrester Installation. Install the AC surge arrester and verify that the installation is in accord with figure 4-25 or figure 4-26, whichever is applicable. Refer to Table 4-3, *AC Power Surge Arrester Installation Materials*, for typical installation materials. Follow all manufacturer special requirements which are applicable. Close and secure all covers on both the arrester enclosure and the service entrance switch enclosure before restoring AC power. Then restore AC power. With power restored, verify that main disconnect fuses are not blown.

c. Restoration of Service. Return all systems to service.

d. Documentation. Redline all applicable facility drawings to match the installation. Review all manufacturer data furnished with the arrester for theory of operation and maintenance data. Provide ARTCC management with all documentation to file at the facility for future reference.

125. LANDLINE PROTECTION. Each landline requires a transient suppressor device unless the line is protected from lightning by enclosure in ferrous conduit which is continuous between the landline source and the ARTCC facility. A suppressor limits peak transient voltage and shunts excess current to the EES. Axial and multiconductor landlines are protected by different types of transient suppressors. Each type is installed inside the building near the landline entrance. A suppressor ground requires an isolated ground path to the EES to protect ARTCC equipment and personnel from conducted transients.

a. Axial Landlines. An appropriate feedthrough axial transient suppressor shall be installed in each RF or other axial line which is vulnerable to lightning. Each coaxial, twinaxial, or triaxial transient suppressor shall have a sealed housing with connectors for in-line installation. External landlines fully protected from lightning by continuous ferrous conduit require transient suppressors only at the equipment to which they are connected, not at entrance to the facility. All axial cable shields shall be grounded through the cable connectors except when a shield must be isolated for correct operation of equipment.

(1) Bulkhead Installation. Axial suppressors shall be installed on or through a tin-plated copper or steel bulkhead connector plate of 1/4 inch minimum thickness. Bulkhead plate metal must be similar to bulkhead feedthrough connector metal to preserve continuity. Similar metals and dissimilar metals, which shall not be allowed to contact

TABLE 4-3. AC POWER SURGE ARRESTER INSTALLATION MATERIALS

ITEM	DESCRIPTION	QUANTITY
1.	Lightning and Electrical Surge Arrester 120/240 VAC, 1-phase, 3-wire, grounded neutral, NSN 5920-01-146-2112	As Required
2.	Lightning and Electrical Surge Arrester, 120/208 VAC, 3-phase, 4-wire, NSN 5920-01-146-2111	As Required
3.	Connector, Conduit, bullet-hub, nylon insulated, malleable iron, 1-1/4 inch, or equal	2 each
4.	Nipple, Electrical, Rigid Conduit, galvanized, 1-1/4 inch by 6 inches	1 each
5.	Bushing, Nylon, insulated, 1-1/4 inch Appleton BBU125 or equal	2 each
6.	No. 6 AWG (Green) stranded, 600 VAC, THW wire	As Required
7.	No. 4 AWG (minimum) (Black) stranded, 600 VAC, THW wire	As Required
8.	No. 4 AWG (minimum) (White) stranded, 600 VAC, THW wire	As Required
9.	Connector, Split-bolt, Burndy KS22, or equal	1 each
10.	Connector, Split-bolt, Burndy KS25, or equal	1 each
11.	Connector, Burndy SERVIT Post Type K2C22, or equal	As Required

each other, are listed in Table 4-4, *Dissimilar Metals*. Each bulkhead plate shall be connected to the EES by a No. 2/0 AWG insulated copper cable color coded green with a red tracer. In a structural steel building properly grounded to the EES, the bulkhead plate also shall be connected to building steel. Some examples of feedthrough coaxial cable transient suppressor installation are shown in Figures 4-27a and 4-27b, *Coaxial Transient Suppressor Mounting*.

(2) Axial Suppressor Ground. An insulated ground lead for suppressor excess current shall be brought out of each sealed axial suppressor. This ground shall be isolated from the suppressor housing and shall be connected to an isolated bus or tie point. The isolated bus shall be connected to the EES through a dedicated No. 4 AWG insulated stranded copper conductor color coded green with a red tracer.

(3) Axial Transient Suppressor Selection. Axial transient suppressors shall be selected to cause minimum degradation of the signal being transmitted and shall not cause marginal operation of electronic equipment due to signal degradation or an unacceptable change in the electrical length of the signal path. Selection of a transient suppressor for an RF signal landline requires careful attention to impedance matching, insertion loss, signal phase distortion, and the line voltage standing wave ratio (VSWR).

b. Paired Conductor and Multiconductor Landlines. Paired conductor and multiconductor landlines shall be protected by hybrid transient suppressor circuits which clamp peak voltage to a safe level while shunting excess current to the EES. All unused conductors in a cable shall be grounded at each end to the line's grounded shield. Upon entering a facility, each signal and return conductor and each shield not connected to the multipoint ground system or EES requires a dedicated transient suppressor. Figure 4-28, *Landline Protector Circuit Assembly Installation*, shows an example of multipair landline protection circuit installation.

(1) Circuit Card Suppressor Ground. Each suppressor ground for excess current shall be connected to bus bar A in a lightning protection junction box. All leads shall be as short as possible and shall be 1 inch maximum for unshielded leads. Bus bar A, with all leads connected, shall be isolated from all other ground systems by at least 1 megohm resistance before the bus is connected physically to the EES. After 1 megohm isolation is verified, bus bar A shall be connected as directly as possible to the EES with No. 4 AWG insulated stranded copper wire color coded green with a red tracer.

TABLE 4-4. DISSIMILAR METALS

Group I	Group II	Group III	Group IV
Magnesium Alloys	Aluminum Aluminum Alloys (all)	Zinc Cadmium	Copper & its Alloys Nickel & its Alloys
Aluminum Alloys 5052, 5056, 5356, 6061, & 6063 Tin	Zinc Cadmium Tin Stainless Steel Tin Lead (solder)	Steel Lead Tin Stainless Steel Nickel & its Alloys Tin Lead (solder)	Chromium Stainless Steel Gold Silver

NOTES:

1. Metals in the same group shall be considered similar for contact between them. Metals in different groups shall be considered dissimilar for contact between them; except for zinc, tin, tin lead (solder), and cadmium in Groups II and III, and except for stainless steel in Groups II, III, and IV.

2. All metals not listed here shall be considered dissimilar with respect to each other and with respect to any of the metals listed in Table 4-4.

3. Where reference is made to a metal in a particular group, the reference applies to the metal on the surface of the part; that is, zinc means zinc casting as well as zinc electroplate, zinc hot dip, or zinc metal spray.

FIGURE 4-27a. COAXIAL TRANSIENT SUPPRESSOR MOUNTING

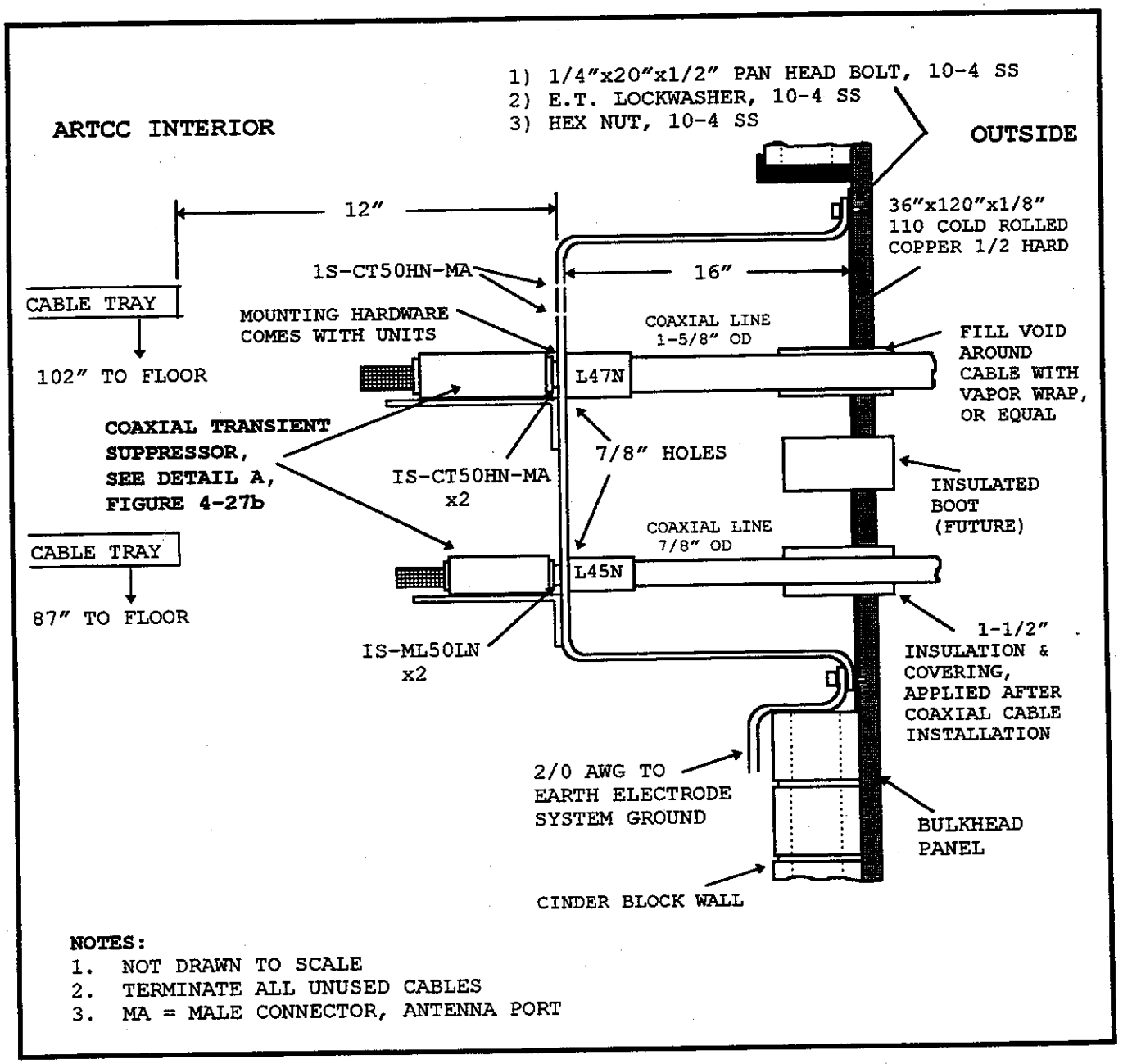

NOTES:
1. NOT DRAWN TO SCALE
2. TERMINATE ALL UNUSED CABLES
3. MA = MALE CONNECTOR, ANTENNA PORT

FIGURE 4-27b. COAXIAL TRANSIENT SUPPRESSOR MOUNTING

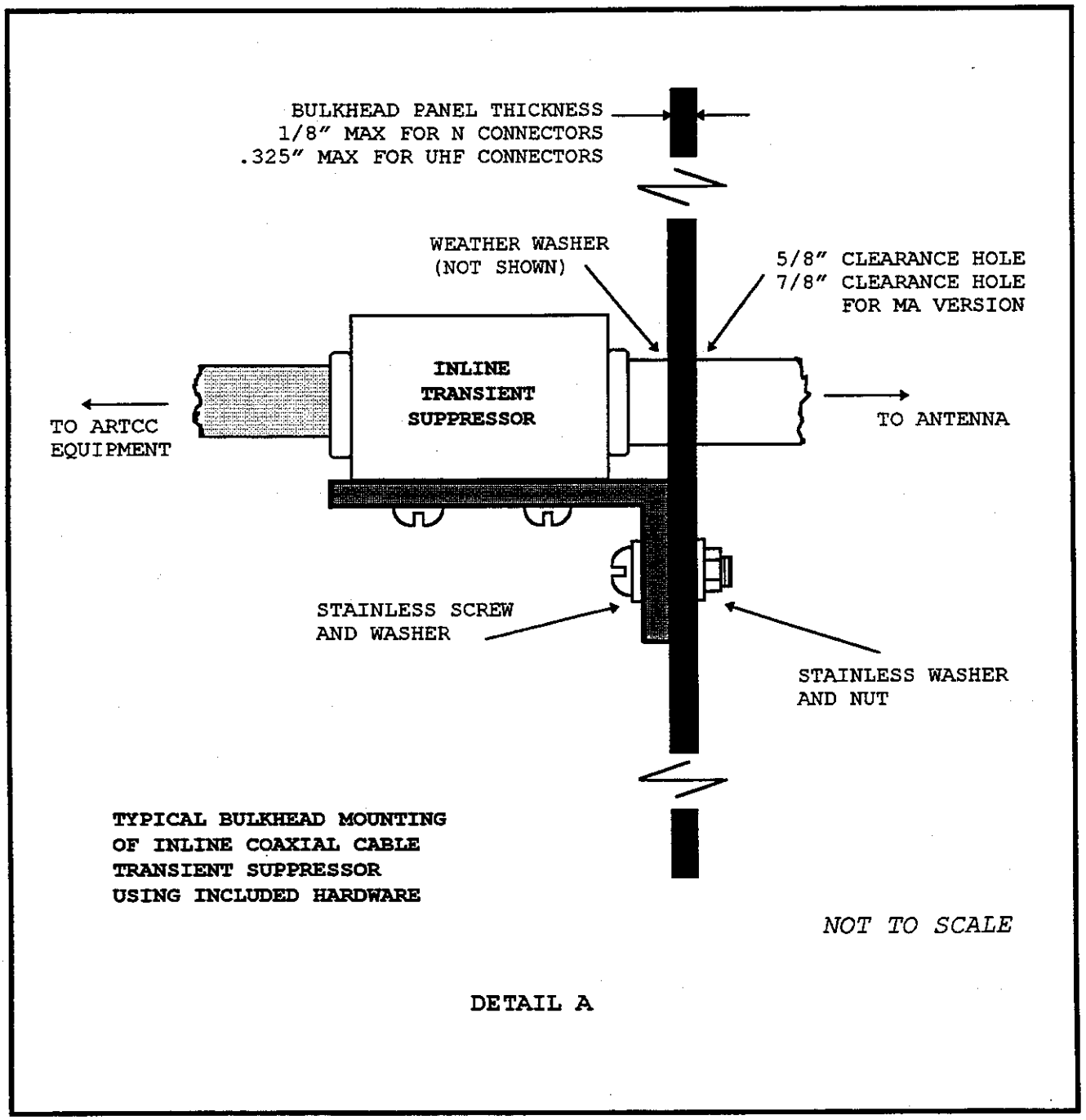

FIGURE 4-28. LANDLINE PROTECTOR CIRCUIT ASSEMBLY INSTALLATION

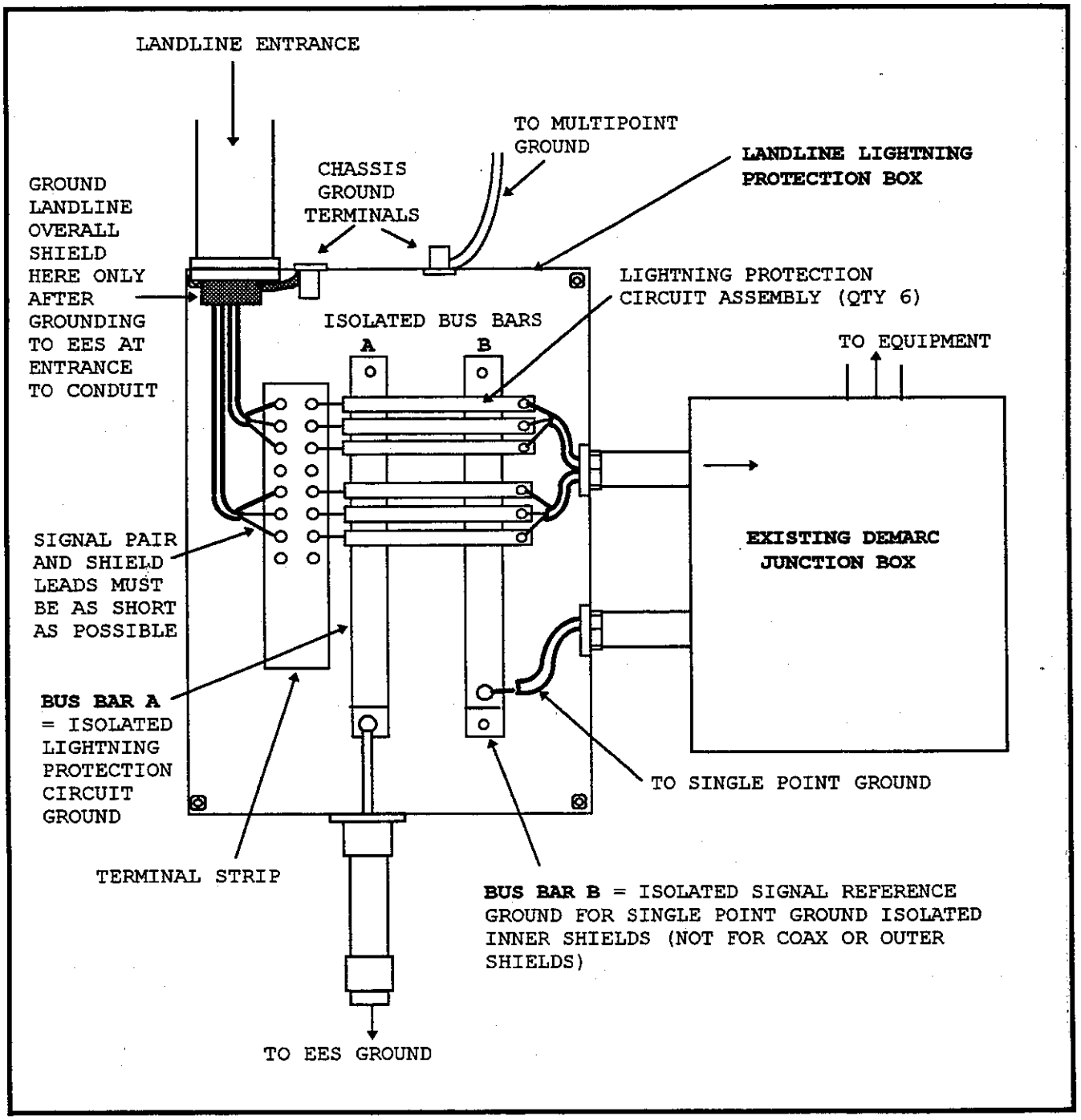

(2) Other Ground Connections. Both ground buses A and B shall be isolated from the junction box and from each other. Ground bus bar B shall be connected to the single point ground system with No. 6 AWG insulated copper wire color coded green with a yellow tracer. Care must be taken in connecting grounds so that the single-ended single point ground system shall have no ground loop paths. Single point ground loops are caused when two ground connections from the same ground system are connected in different places to the same continuous cable shield, or by connection of a single point conductor to the multipoint ground system, or by a multipoint ground connected to the single point system. If two ground connections exist on a continuous single point grounded shield, one shall be removed to leave only one ground connection, which shall connect only to the single point ground system. The landline protection circuit junction box enclosure shall be connected to the multipoint ground system with No. 6 AWG insulated copper wire color coded green with an orange tracer.

c. Pre-installation Tasks. Adequate planning must be done before any changes are made to lightning protection equipment. Prior notice of any system shutdown must be given for all affected systems.

(1) Evaluation of Existing Protection Equipment. Determine if the ARTCC landlines have transient suppressor circuits already installed in each incoming signal, return, and ungrounded shield. If each protection circuit is installed properly, has operated correctly, and has operating parameters required for its application, no further action is required. If leased line protection equipment supplied by a telephone company or other company is found to be inadequate, notify the owner company and request an upgrade of their protection equipment. FAA protection circuits shall not be added on leased lines in parallel with Telco or other owner installed protection equipment. If any facility leased lines have FAA protection circuits duplicating Telco or other owner installed protection equipment, the FAA protection circuits shall be removed, and the owner installed protection equipment shall be retained or upgraded by the owner company if necessary.

(2) Coordination of Systems Shutdown. Request the issuance of a NOTAM and coordinate the shutdown of the systems affected by the temporary loss of any affected RF, audio, data, monitor, and control functions.

d. Existing Facility Installation. Identify the junction box, inside the facility, in which incoming landlines are terminated landline lightning protection junction box within 1 foot of the

existing demarcation junction box, on the left side if physical and circuit constraints allow left side installation. Install a lightning protection circuit transient suppressor in each line, return, and ungrounded shield. Some materials used in existing installations are listed in Table 4-5, *Lightning Protection Circuit Installation Materials*.

(1) Wiring Signal and Equipment Grounds. Each landline lightning protection junction box enclosure shall be connected to the ARTCC multipoint ground system using a No. 6 AWG insulated copper conductor color coded green with an orange tracer. Isolated bus bar A shall be connected to the earth electrode system using a No. 4 AWG insulated copper conductor color coded green with a red tracer. Isolated bus bar B shall be connected to the ARTCC single point ground system using a No. 6 AWG insulated copper conductor color coded green with a yellow tracer. Refer to Figure 4-29, *Landline Lightning Protection Junction Box Detail*, as an installation guide.

(2) Documentation of Junction Box Installation. Redline all applicable facility drawings to match the installation. Review the manufacturer data furnished with the suppressors for theory of operation and maintenance data. Provide ARTCC management with all documentation to file at the facility for future reference.

e. New Facility Installation. Install a new landline lightning protection junction box and required lightning protection circuits.

(1) Lightning Protection Junction Box. Identify which landlines entering the facility demarcation junction box are scheduled to receive lightning protection circuits. Mark each line to identify its function. Measure and record the signal level of each of these lines on appropriate FAA forms. Remove installed transient protection devices or circuits inadequate for new or existing equipment. Figure 4-30, *Lightning Protection Circuit Card Installation*, details installation of an in-line lightning protection circuit card assembly. Describe each inadequacy and document the removal of existing devices.

CAUTION: Low voltages exist on landlines. Do not short live lines.

(2) Inspect Systems for Proper Operation. Remeasure the signal levels previously measured and record the new levels. Some loss in each signal may have occurred, but each loss should be no more than the designed allowable limit.

(3) Return Systems to Service. Return all affected systems to full service.

TABLE 4-5. LIGHTNING PROTECTION CIRCUIT INSTALLATION MATERIALS

ITEM	DESCRIPTION	QUANTITY
1.	Screw, machine, No. 6-32x1/2 inch	8 each
2.	Lockwasher, No. 6, split, silicon	8 each
3.	Washer, flat, No. 6, 5/16 inch	8 each
4.	Lug, spade, Thomas & Betts RA1203, or equal	12 each
5.	Splice, insulated, Burndy INSULINK, Type SN18, or equal	As required
6.	No. 22 AWG wire, twisted pair, solid copper, red and black, Alpha 1793, or equal	As required
7.	Lightning Protection Circuit Assembly, Type PA3-12, printed wiring board, NSN 5920-01-046-4246	As required

FIGURE 4-29. LANDLINE LIGHTNING PROTECTION JUNCTION BOX DETAIL

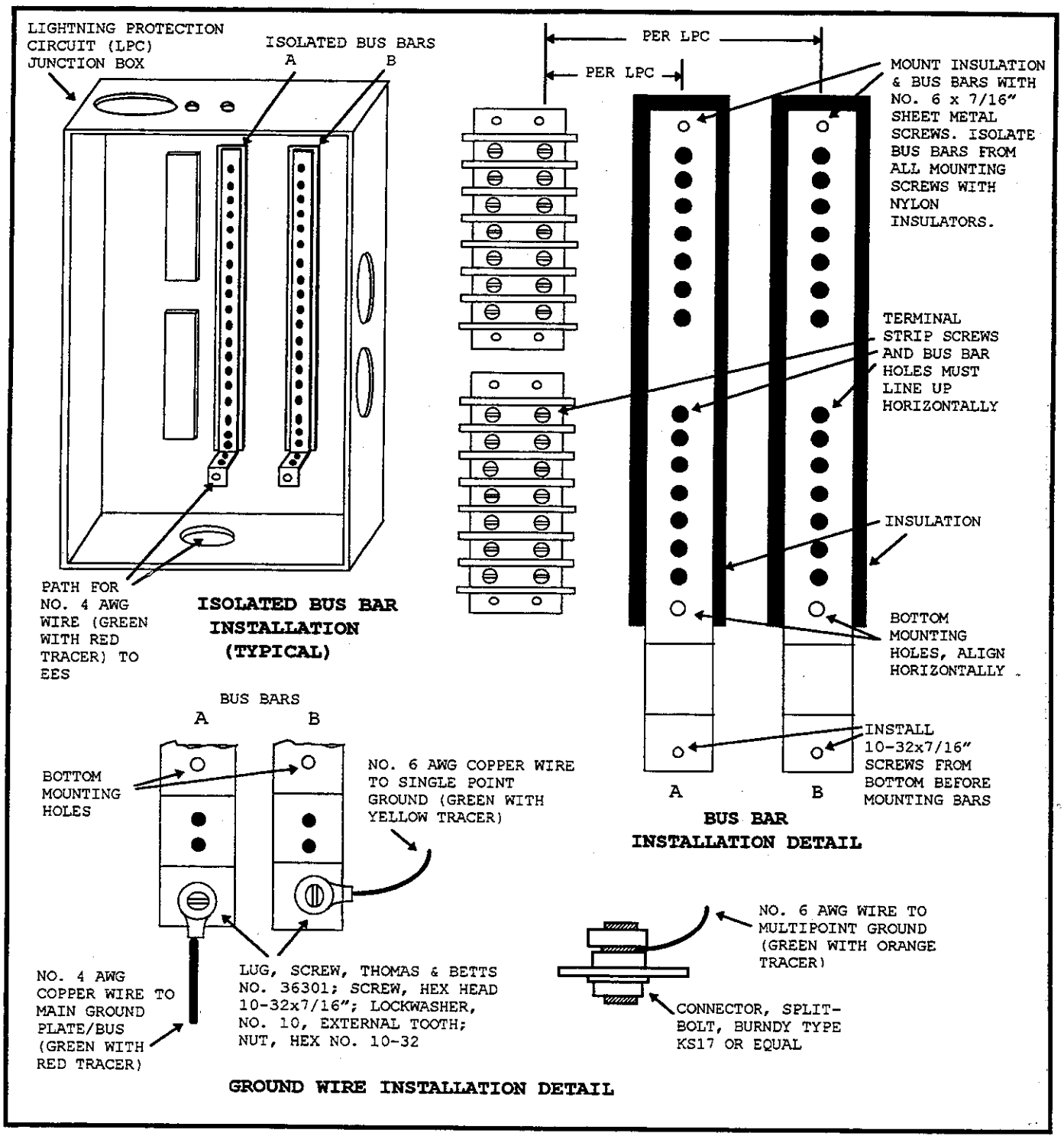

FIGURE 4-30. LIGHTNING PROTECTION CIRCUIT CARD INSTALLATION

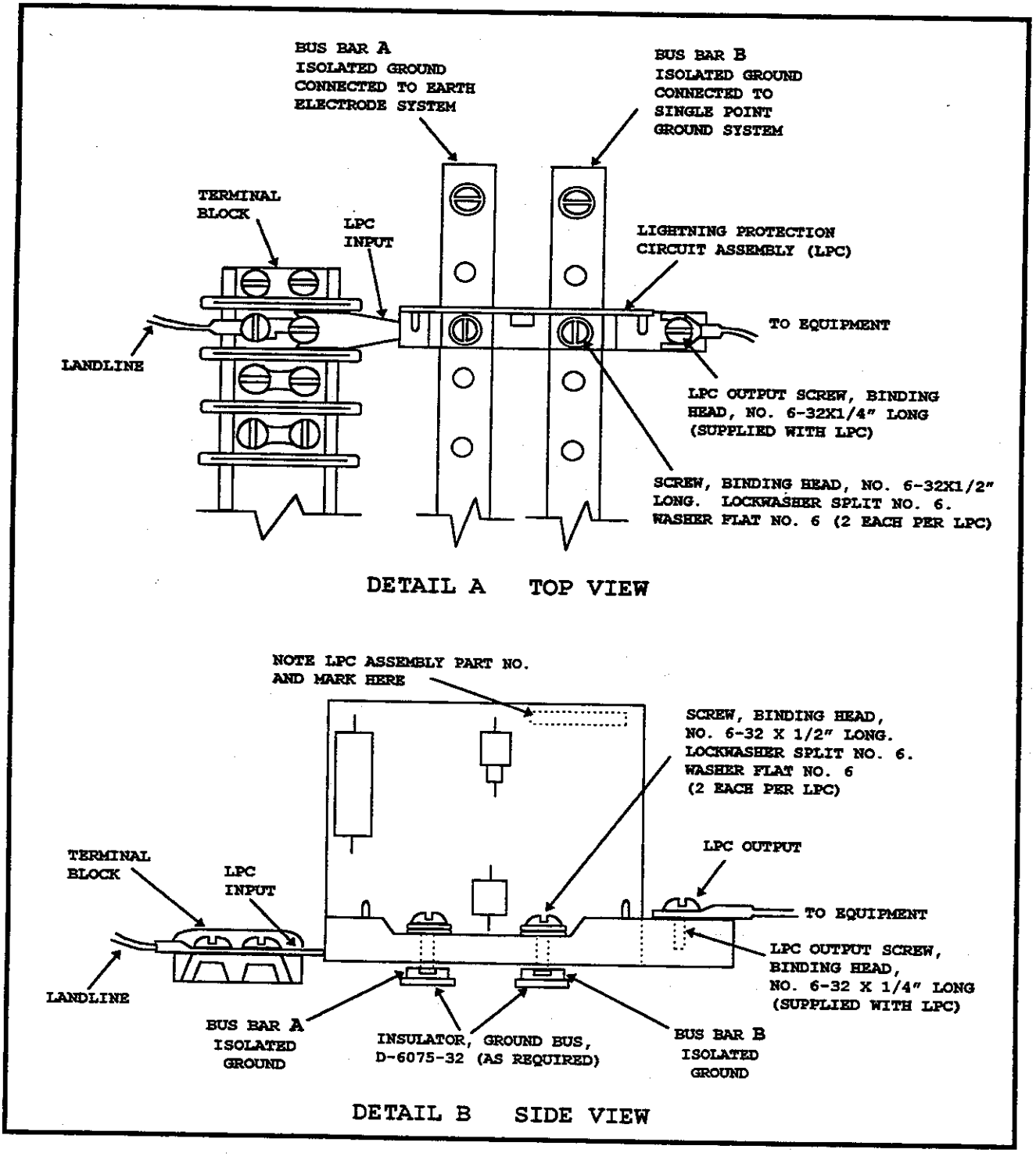

(4) Documentation of Installation. Redline all applicable facility drawings to match the installation. Review the manufacturer data furnished with the suppressors for theory of operation and maintenance data. Provide facility management with all documentation to file at the facility for future reference.

126. ANTENNA SYSTEM PROTECTION. Antenna coaxial cables are exposed landlines and shall be protected from transients as described above under axial landlines. Antenna cables cannot be enclosed completely in ferrous conduit for transient protection. Therefore, the outer shield of each coaxial cable shall be bonded to its grounded connectors at both ends and, if practical, shall be grounded at an intermediate point near the base of an antenna tower or grounded structure on which the cable is installed. In addition, a feedthrough coaxial transient suppressor shall be installed in each antenna coaxial cable immediately after the cable enters a building. Transient suppressors shall not be installed on an antenna tower.

127.-132. RESERVED.

SECTION 7. TESTING

133. CRITERIA. All ground systems installed at an ARTCC shall comply with grounding, bonding, shielding, and transient protection standards in FAA-STD-019. Each ground conductor connection, exothermically welded or clamped, shall exhibit a junction resistance of less than 1 milliohm measured across the junction. This measurement shall be made with a 4-terminal milliohm meter of sufficient sensitivity to measure junction resistance. Testing and inspections are necessary to certify compliance with FAA standards and to meet requirements in NFPA-70, *National Electric Code;* NFPA-780, *Lightning Protection Code;* and UL-96A, *Installation Requirements for Master Labeled Lightning Protection Systems.*

134. EARTH ELECTRODE SYSTEM (EES). The ARTCC EES shall be tested during installation and periodically after installation to verify continued compliance with required electrode-to-earth resistance of 10.0 ohms or less. Measurement of the system earth-to-electrode resistance requires an earth resistance tester, YEW Type 3235, or equivalent, or a four probe test set. Prior to testing, verify that the tester calibration certification is still valid. Follow instructions for testing provided in the test equipment manual.

a. Drawings. Engineering drawings associated with the ARTCC shall be reviewed to verify the locations and dimensions of the existing or newly installed EES and access wells.

b. Procedure. The electrode-to-earth resistance of an existing or newly installed EES shall be measured while the system is disconnected from the ARTCC internal grounding systems. Internal grounding systems are the multipoint and single point ground systems terminated on the ARTCC main ground plate/bus, the entrance AC power surge arrester and protection ground, and the landline entrance transient suppressor ground(s). The resistance of an existing EES might exceed the required minimum electrode-to-earth resistance due to system deterioration, improper installation, or site conditions. Site analysis and procedure are detailed in Order 6950.20.

(1) Measure Earth Resistance. Measure the resistance of the EES using an earth resistance tester. DO NOT test the EES within 72 hours following rain, or if the ground is frozen. Multiple earth resistance measurements must be made for each site to verify accurate results.

(a) Resistance Tester Operation. The YEW 3235 resistance tester, illustrated in Figure 4-31, *Earth Resistance Tester*, passes a known current between probe E and probe C. Probe P, the potential balance probe, is placed midway between probes C and E. When the meter resistance knob is adjusted so the resistance bridge is balanced, the potentials from probe p to probes C and E are equal and the earth resistance is read from the dial.

(b) Probe Location. Maintain approximately equal distances between probe p and probes C and E. Separate probes C and E by a distance more than four times the length of the longest installed ground rod on site. Locate probe P midway between probes E and C. If necessary, probe P may be offset, from an imaginary line connecting probes E and C, up to 40 degrees measured from both probes E and C. Use the equipment manufacturer's instructions.

(2) Locate Ground Rod. To measure the earth resistance of an existing EES, find perimeter ground rods and their lengths using facility documentation. If necessary, use hand tools to dig a trench from the place where the facility ground conductor exits the building to locate a perimeter ground rod and other rods. A large ARTCC EES and systems with longer ground rods have larger electrical field areas in the earth, which can limit current flow due to more mutual inductance between rods. For such facilities the distance required between test probes E and C may need to be more than four times the longest ground rod length for accurate earth resistance measurements. Select a ground rod to use as probe E and make measurements as described above.

(3) Evaluation of Test. EES resistance of 10.0 ohms or less is satisfactory. Electrode-to-earth resistance higher than 10.0 ohms may cause unsatisfactory operation of facility equipment due to an improper single point ground reference level. Also, a higher ground path resistance can prevent surge and transient protection devices from properly protecting the facility. If earth-to-electrode resistance measures more than 10.0 ohms and facility operation is marginal or inadequate, the EES shall be repaired or upgraded. If the resistance of a newly installed EES exceeds 10.0 ohms, review the soil conditions and examine the installed system to determine the cause of the high resistance. Correct the high resistance condition using methods described earlier in this chapter.

135. LIGHTNING PROTECTION SYSTEM. All installed lightning protection equipment and transient and surge protection devices, including fuses, shall be inspected and tested for continuity and, if possible, for proper operation. A 4-terminal milliohm meter, with sensitivity

FIGURE 4-31. EARTH RESISTANCE TESTER

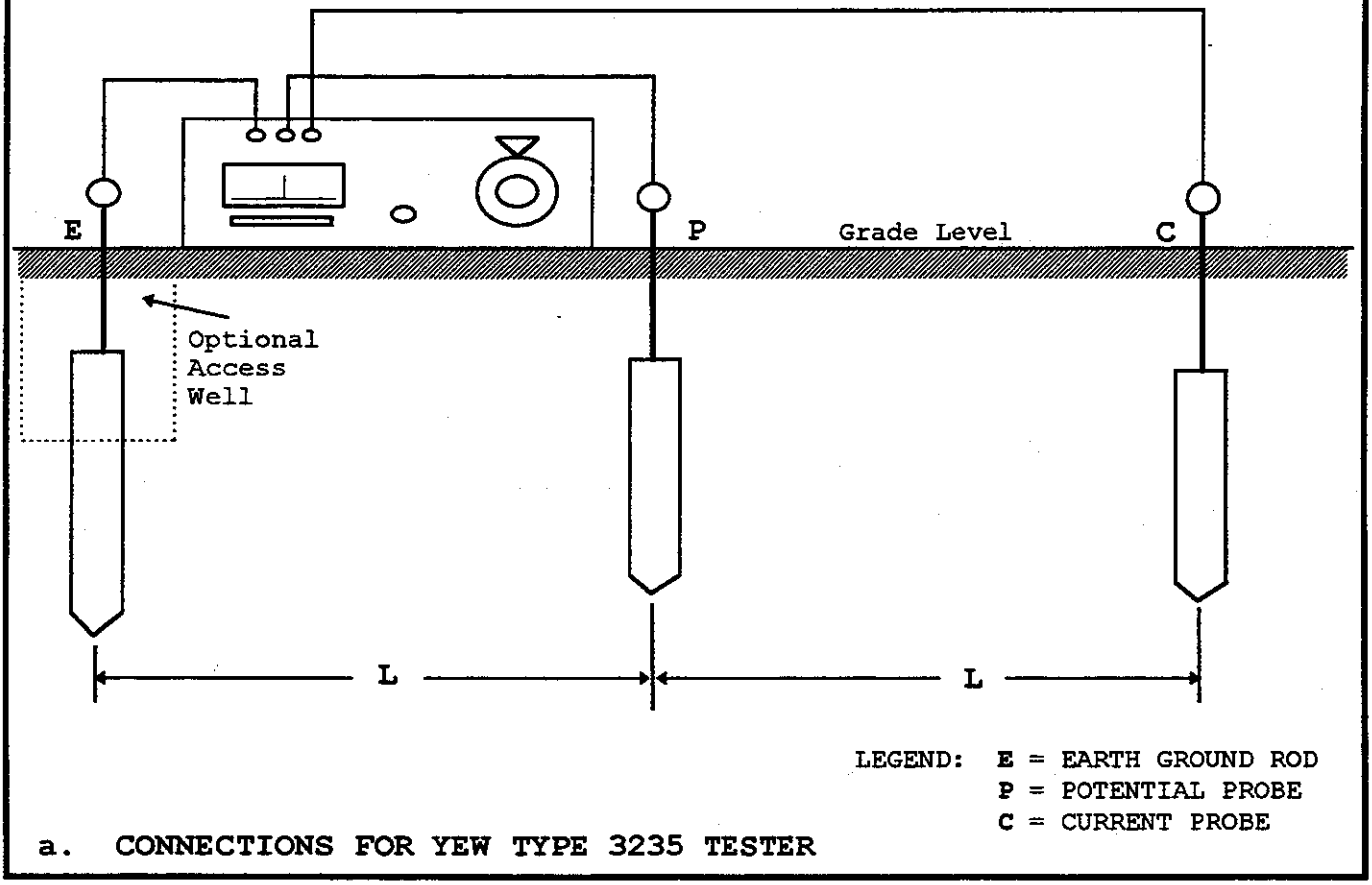

a. CONNECTIONS FOR YEW TYPE 3235 TESTER

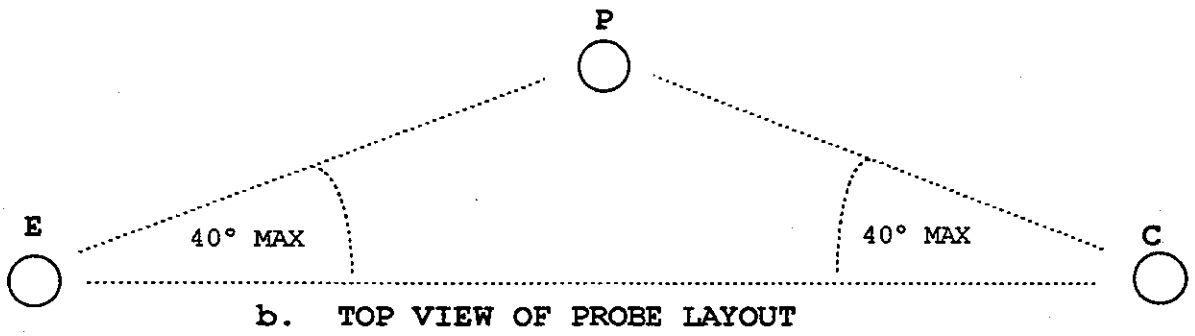

b. TOP VIEW OF PROBE LAYOUT

sufficient to measure junction resistance accurately, shall be used to measure the resistance of all bonds, air terminal connections, and junctions in the lightning protection system. The zone of lightning strike protection provided for the site by air terminals shall be verified as adequate to protect all structures and equipment on site. Any inadequacies found during the inspection shall be recorded in an inspection log and shall be corrected as soon as possible.

a. Lightning Strike Protection. Equipment which protects site structures from direct lightning strikes shall include air terminals, cables interconnecting air terminals, down conductors, and the EES.

(1) Air Terminals. Inspect all air terminals for proper material, size, and installation on each structure. Check the location, length, and elevation of each existing air terminal against placement requirements on scale drawings which define the zone of protection for site structures from all four sides. If no such drawings are available, scale drawings of the site zone of protection shall be made for the existing site to determine that all equipment and facilities on site are protected adequately. Inspect all mounting hardware for correct size and type. Make sure all fasteners are properly tightened. Measure the junction resistance of connections to roof and down conductors and verify that each junction resistance is one milliohm or less. Inspect each installed air terminal for lightning damage, corrosion, pitting, breaks, and deformity. Note all discrepancies in the inspection log.

(2) Conductors. Conductors shall be inspected for proper type, installation, and physical condition.

(a) Installation. Inspect each down conductor for proper material, size, and routing. Verify that all mounting hardware is the appropriate size, type, and material. Inspect all bends and verify that each bend radius is 8 inches or more and each bend angle is 90 degrees or more. Make sure all fasteners are tightened properly. Verify that each tower down conductor is clamped to each tower structure section, or more often as necessary, and is bonded electrically to the tower metal structure near the bottom of the tower. Verify that each building down conductor is bonded to any metal it contacts, or is near, in its path to the earth electrode system.

(b) Condition. Inspect all conductors and associated components of the existing ground system for corrosion, pitting, and damage from lightning discharges. Measure the junction resistance of any new or questionable existing ground connections to air terminals,

to roof or platform perimeter cables and isolated metal, to tower junction boxes and base plates, to all site structure metal, to down conductors, and to the EES to verify one milliohm or less resistance through each junction.

(3) Zone of Protection. The zone of protection from direct lightning strikes is defined as the space between a 100 foot radius ball of lightning and a structure as the ball rolls up to, over, and down the structure and its air terminals. This zone is defined using arcs drawn to scale on elevation site drawings which show all structures, including air terminals and equipment, to scale and located exactly. The drawings shall include above ground transmission lines and cables, roof and tower conductors, and down conductors. If drawings are not available, actual measurements shall be taken and elevation drawings made to scale, for all four sides of the site. Verify that existing overlapping zones of protection for site facilities and equipment provide adequate site protection. If existing protection is not adequate, air terminals shall be added, lengthened, or moved to different positions to provide required protection.

b. AC Power Surge Protection. Protection from lightning generated surges on AC power lines is provided by surge arresters installed on each AC and neutral line and by grounded continuous ferrous conduit. Inspect surge arrester installation and verify that line-to-line or line-to-ground arresters provided are adequate for facility requirements. Each surge arrester shall be connected on the line side of the main disconnect switch, or if necessary, on the line side of the fuse in-line to the load. Arresters are installed with No. 4 AWG insulated copper wire without loops, sharp bends, or kinks. Visually inspect each arrester fuse, and if a fuse is blown, replace the fuse module or, if necessary, the arrester. Where possible, measure junction resistance of bonds, terminal connections, and conduit ground connections, and verify conduit electrical continuity.

c. Transient Suppression. All communication, control, and status landlines entering a facility above or below ground require protection from conducted transients. In-line transient suppressors installed in the facility near the landline entrance are required, unless landlines are run full length in watertight continuous ferrous conduit between facilities. Unused wires in a non-axial type cable must be grounded at each end to their grounded shield. Verify by visual inspection and by resistance measurements that all installation requirements are met for connections, isolation, and continuity.

(1) Axial Transient Suppressors. Verify that each coaxial, twin-axial, and triaxial cable entering a facility has a properly installed and grounded feedthrough axial transient suppressor that meets facility equipment and non-degrading signal requirements. Verify that all axial cable shields are grounded properly at each end and to the EES.

(2) Non-Axial Landline Transient Suppressors. Verify that transient suppressor circuits for twisted pair and other non-axial landlines are provided in a separate junction box by the demarc box where landlines enter the facility. Transient suppressor bus bars A and B must be isolated from the junction box and from each other. Bus bar A must be connected directly to the EES. Verify that transient suppressors are sized correctly for the load protection required.

(3) Conduit. Verify that conduit which shields landlines is made of ferrous metal and has electrical continuity throughout its length. Continuous conduit between facilities must be watertight. Conduit shall be connected to the EES at each end. Also, if the installed length is 300 feet or more, the conduit shall be connected to the EES every 100 feet.

(4) Armored Cable. Except for AC power cables, buried landlines which exceed 300 feet in length may use armored cable instead of conduit. Verify that where armored cable enters the facility, it is bonded directly to the EES or to the main ground plate/bus with a No. 2 bare copper wire. Verify that any armor grounding complies with FAA-STD-019.

(5) Guard Wires. Verify that a buried cable with more than 3 feet not enclosed in ferrous conduit has at least a No. 6 AWG solid copper guard wire buried a minimum of 10 inches above and in line with the cable. The guard wire shall be connected to earth ground at the ends and at every 300 feet when the wire exceeds this length. A run of buried cables requires one guard wire for each 3 feet or portion of 3 feet of spread width. Guard wires shall be spaced no closer than 1 foot nor farther than 3 feet from each other and shall be parallel with each other. Refer to figure 4-19 for correct guard wire position in relation to cable spread width.

136. MULTIPOINT GROUND SYSTEM. Disconnect a branch of the multipoint ground system to verify its isolation from any lightning or AC protection ground system, from any 'chassis ground' equipment, and from the single point ground system. Correct any violations. Connect only verified isolated branches to any multipoint ground plate or bus.

a. Ground Plate. Verify that each ground plate is of proper size and material and is mounted correctly. Inspect all connections to ground plates and verify that each junction resistance measures 1 milliohm or less using a 4-terminal milliohm meter. Any connections that do not meet this requirement shall be redone to comply with the specification of 1 milliohm maximum junction resistance.

b. Electrical Paths. Verify that at least two low impedance electrical paths exist from the multipoint ground system to the EES. Verify that the multipoint ground system is isolated from the single point ground system until the ARTCC main ground plate/bus. Measure the multipoint ground path resistance to ground with a 4-terminal milliohm meter to verify that it is 5.0 milliohms or less. Verify that all multipoint ground system cables are coded green with an orange tracer and are isolated from the AC power protection ground system until connected through the EES.

c. Building Grounding. Facility structural steel elements shall be grounded by multiple connections to the EES.

(1) Steel Buildings. Verify that joints in a steel framed building are electrically bonded. Measure each accessible steel joint with a 4-terminal milliohm meter to verify junction resistance of 1 milliohm or less. The resistance of a bolted joint can be reduced as follows. Clean the joint with solvent, tighten the bolt to the proper torque, apply sealant, and remeasure the joint resistance. If the resistance is still greater than 1 milliohm, add 1 or more conductive jumpers across the joint until the junction resistance measures 1 milliohm or less. Verify that electrically continuous steel building elements are connected to the EES directly via dedicated conductors to ground rods at correctly spaced intervals.

(2) Non-Metallic Buildings. Verify that all metallic elements of a non-metallic building are grounded to the earth electrode system directly or through the multipoint ground system. Each junction resistance shall measure 1 milliohm or less using a 4-terminal milliohm meter. Upgrade high resistance junctions to meet the 1 milliohm requirement.

137. 'CHASSIS GROUND' EQUIPMENT. Identify any equipment which uses its chassis and case as a signal return path or voltage reference, instead of a protection ground. Verify that the equipment case is isolated from the rack or housing in which the equipment is installed and is isolated from all facility grounding systems.

138. SINGLE POINT GROUND SYSTEM. Verify that a disconnected branch of the single point ground system is isolated from the multipoint

ground system before connecting that branch to a single point ground bus or plate.

a. Ground Plate. Verify that all single point ground plates are the proper size and construction, and are isolated correctly from structural metal. Disconnect the main single point ground cable from the main ground plate to measure the isolation resistance between the plate and the cable. Isolation resistance must measure at least 10 megohms per FAA-STD-019b. If the isolation resistance is lower, the single point ground system isolation has been compromised and the isolation must be restored. Disconnect each single point ground branch to measure its isolation and to locate and repair isolation violations. Measure the junction resistance of each reconnected single point ground with a 4-terminal milliohm meter to verify resistance of 1 milliohm or less for each re-made connection.

b. Cables. Verify that all cables used in the single point ground system are the correct size, are insulated from contact with other grounds, and are coded green with yellow tracer. Verify that audio and digital communication and other appropriate non-axial cable shields are grounded only at one end and are connected to the correct analog or digital single point ground buses. Replace cables as necessary to meet specifications.

c. Bus Bars. Verify that single point ground bus bars are of proper size and material and are mounted in and isolated from equipment cabinets and junction boxes where applicable. Verify with a 4-terminal milliohm meter that the resistance across each connection to a bus bar is 1 milliohm or less. Verify that each single point bus bar is properly sized and appropriately marked.

139.-145. RESERVED.

CHAPTER 5. POWER DISTRIBUTION SYSTEM

SECTION 1. AC POWER

146. GENERAL. ARTCC sites require commercial three phase AC power installed in compliance with National Fire Protection Association (NFPA) Title 70, *National Electric Code* (NEC). Acquisition of utilities should be coordinated with the Logistics Division Team responsible for acquisition of utilities. Further specific guidance can be found at internet address http://fast.faa.gov under the FAA Acquisition System Toolset (FAST) by clicking in sequence on Toolset, Procurement Toolbox, Real Estate Guidance, and then under Document for viewing select Utility Acquisition Guidelines.

a. ARTCC Electrical Loads. ARTCC critical and non-critical electrical loads operate from different AC buses. Critical loads are systems and equipment which maintain uninterrupted control of air traffic safety. Noncritical loads are all other services and site equipment not supporting critical ATC, but which are essential to normal site operation. Separate transformers supply AC power to critical, essential, and building services power buses which provide AC power through separate power distribution networks. During commercial power outages, uninterrupted electrical power is maintained only on the critical power bus from on-line storage batteries and from standby AC power generated on site. Figure 5-1, *ARTCC Alternating Current Power Distribution,* is a block diagram showing typical AC power usage at an ARTCC.

b. Critical Electric Power. The ARTCC critical power bus serves only commissioned communications and support systems and equipment that are designated critical to ATC and air traffic safety. AC power shall be supplied continuously to the critical power bus by utilizing a backup uninterruptible power supply (UPS) system powered by on-line charge-maintained, storage batteries until standby engine generator sets can assume the load on the critical power bus. A list of ATC critical systems and equipment required to be on the critical power bus is found in Order 6950.2D, *Electrical Power Policy Implementation At NAS Facilities*, Appendix 1, Part B, *Facility Power Source Codes: ARTCC*. A few general types of systems and equipment defined under FAA configuration control as critical to ARTCC ATC are listed below.

(1) A/G communications and control equipment, such as ATC consoles, voice switches, RCE, local A/G radios, and recorders.

(2) Channel display systems

FIGURE 5-1. ARTCC ALTERNATING CURRENT POWER DISTRIBUTION

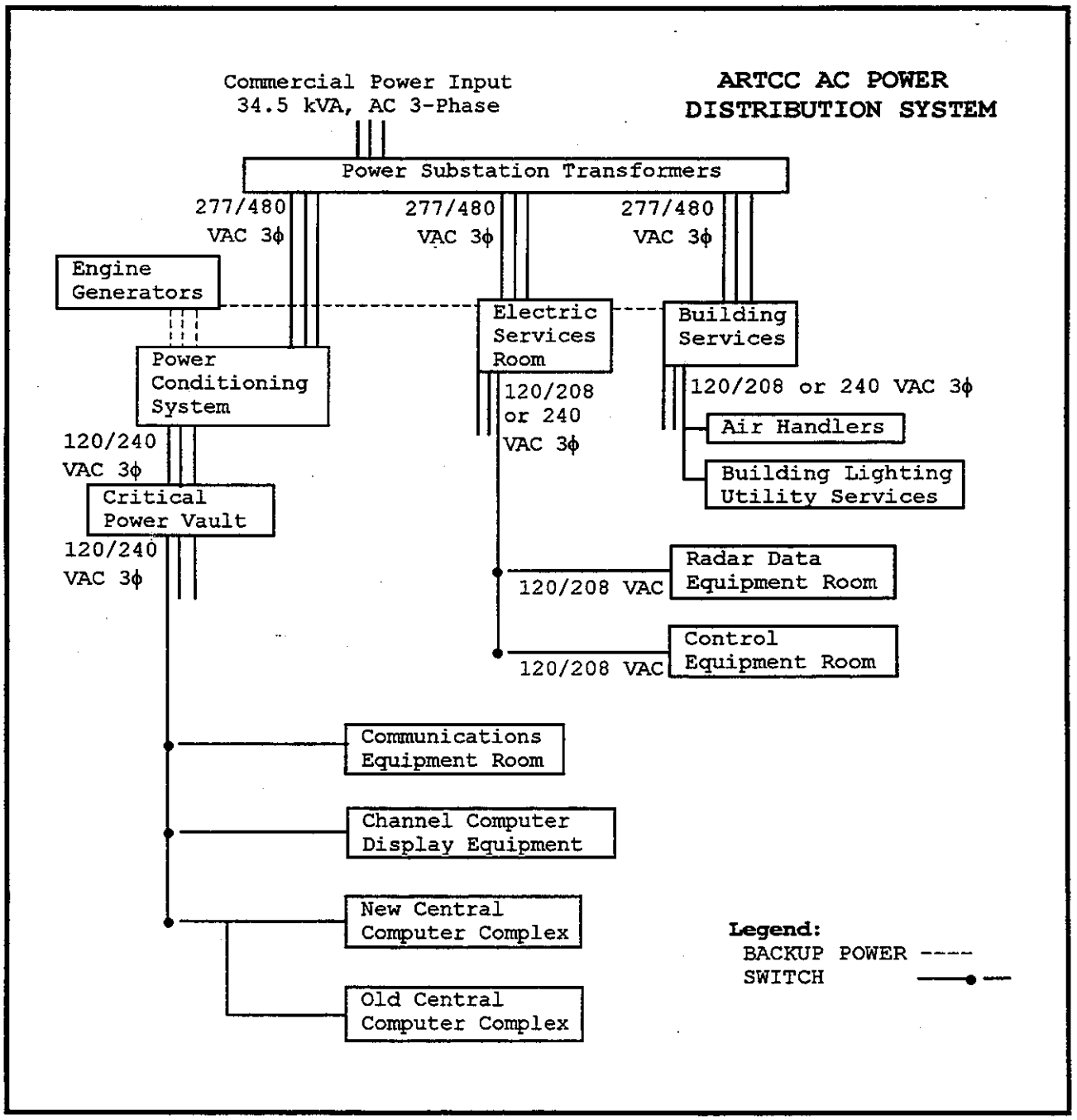

(3) Central and area computer complexes

(4) Coded time source system

(5) Radar tracking, display, and weather systems

(6) NAS data interchange systems equipment

(7) Standby AC power bus synchronizing circuits

c. Noncritical Electrical Power. Some equipment and systems providing essential utility services to the ARTCC and site are designated noncritical to ATC as specified in Order 6950.2D, Appendix 1, Part B, Facility Power Source Codes: ARTCC, and by configuration control decision. Noncritical but essential equipment shall be powered from either the essential or the building services power bus. Utility systems and equipment supporting ATC equipment areas which must be maintained during a power outage shall be powered from a generator backed up essential or building services bus. Noncritical functions are lost during a power outage. Battery operated lights provide visibility for site personnel safety and in certain essential areas during a power outage. Listed below are some general categories of noncritical ARTCC functions.

(1) Building and site lighting not listed as critical

(2) Facility heating, cooling, and air handling not listed as critical

(3) Convenience receptacle power not in critical equipment

(4) Noncommissioned critical systems/equipment

(5) Test Equipment

(6) Telecommunications equipment with battery systems

(7) All systems and equipment not listed as critical

147. AC POWER DISTRIBUTION. AC service from each substation transformer enters an ARTCC either through underground conduit buried a minimum of 2 feet below grade or, if aerial service, into conduit upon entrance to the facility. The conduit is routed directly to a main service disconnect enclosure. Inside each main service disconnect enclosure, a surge arrester, a main service disconnect

means, and a load line fuse shall be installed for each incoming AC line. Internal AC power distribution shall occur after the main service disconnect enclosure through circuit breakers on AC power panelboards.

a. Incoming AC Surge Control. Excess current and voltage caused by lightning strikes or power surges shall be removed from incoming lines before each line leaves its main service disconnect enclosure. Power on each incoming AC power line shall be limited to a maximum safe level which will not damage facility loads. Surge arresters provide dedicated safe paths to shunt excess current from AC power lines directly to ground rods in the EES.

b. AC Power Buses. A typical ARTCC has incoming AC service from three substation transformers. These supply separate three phase power for critical, essential, and building services AC power buses. Level controlled AC power is routed from each main disconnect to AC panelboards on which the power is distributed. A block diagram of a typical ARTCC AC power system is shown in Figure 5-2, *ARTCC Primary AC Power System*. All parts of a totally interdependent subsystem shall be connected to the same power source to reduce the number of possible points of power failure. AC power shall be distributed according to whether the power supplied is normal, regulated, or uninterruptible power and then according to functions such as those listed below.

(1) Primary or main ARTCC communications equipment, with equipment for adjacent sectors to be powered from different AC sources to reduce simultaneous power loss for adjacent sectors

(2) Secondary or standby communications equipment, with different power sources for primary and backup subsystems to reduce the possibility of simultaneous loss of both systems

(3) Essential site functions such as non-critical lights, heating/cooling equipment, and convenience outlets

148. AC POWER PANEL. An AC power panel can be a main AC power panel or a power distribution AC panelboard.

a. Main AC Power Panel. A main AC power panel contains a main service disconnect enclosure and surge arresters for the incoming AC power lines. Surge arresters should be located in a separate enclosure but may be installed in a main disconnect enclosure which has unused space sufficient to segregate the high voltage and current devices from the main power lines. AC transformers which provide

FIGURE 5-2. ARTCC PRIMARY AC POWER SYSTEM

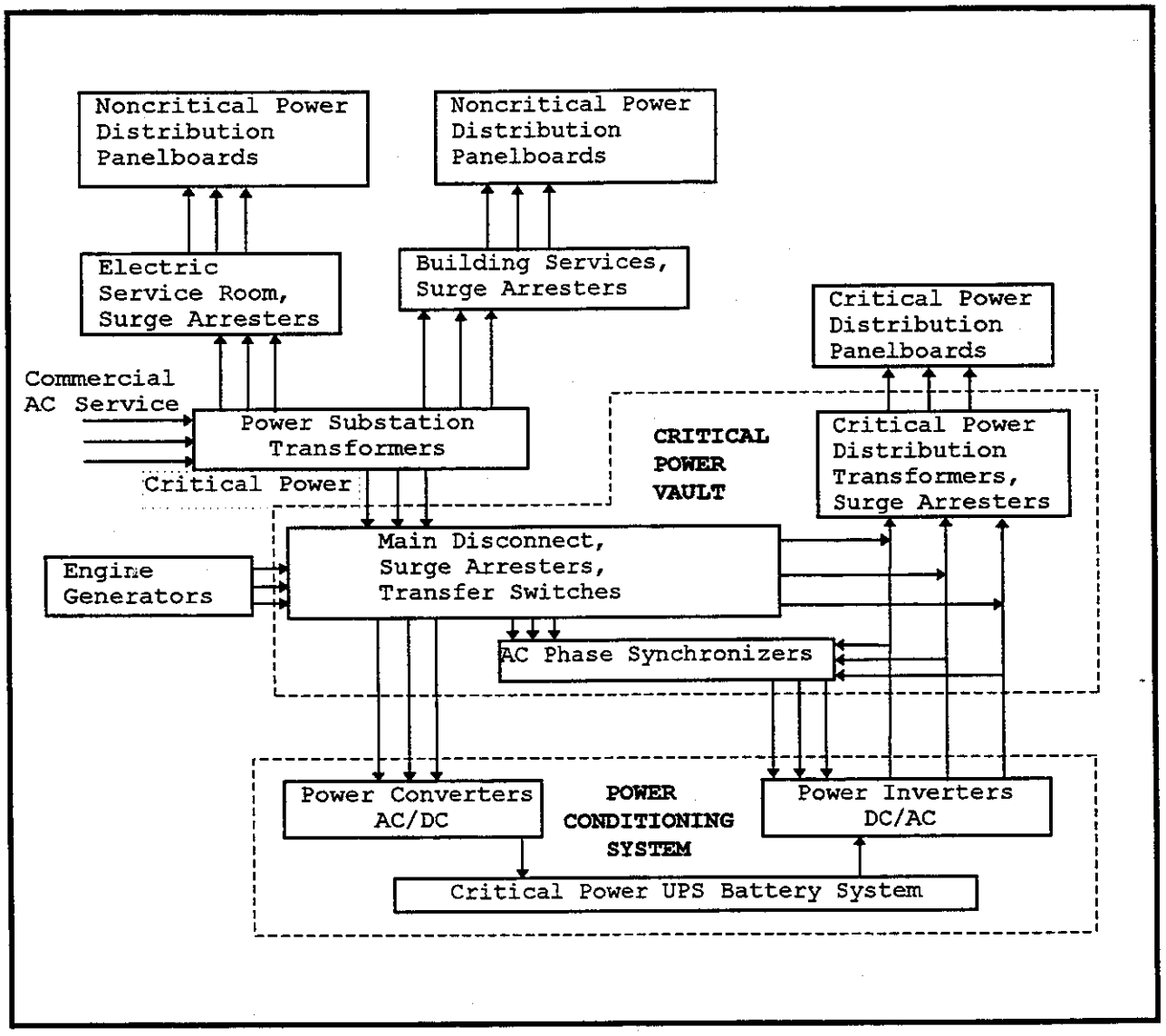

power for distribution to separate subsystems also may be located on main AC power panels as necessary.

b. AC Panelboard. AC panelboards contain AC distribution circuit breakers grouped according to power source, criticality of subsystem, equipment, and function. A critical bus AC power panel supplies AC power continuously to battery chargers which maintain the charge on UPS on-line backup power storage batteries. The critical bus power panel also contains transfer switches which, upon loss of commercial power, automatically transfer critical AC power service loads to emergency AC power converted from the on-line storage batteries. Then standby AC power, generated by on-site engine generator sets, is switched automatically to the critical bus to replace the UPS AC power, with no interruption to ATC operations.

149. CRITICAL POWER BUS. AC power shall be provided continuously to the ARTCC critical power bus. When a commercial power outage occurs, AC power converted from on-line storage batteries automatically shall provide uninterrupted AC power until site engine generator sets are started, come up to speed, and can assume the task of providing uninterrupted AC power to the critical power bus. The critical power bus provides power to ATC equipment, subsystems, and some facility support systems designated critical to sustain ATC. Order 6950.2D, Appendix 1, Part B, contains a specific list of equipment to be placed on the ARTCC critical power bus. A few types of equipment on the critical power bus are listed below.

a. AT controller console communication and control equipment

b. computer display channel equipment

c. central computer complexes

d. voice recorders

e. voice switch systems

f. radio control equipment

g. local BUEC and local main/standby A/G radios

h. telecommunications and RCL interface equipment

i. PABX equipment

j. air handler and fire alarm equipment per ATC equipment area

150. ESSENTIAL POWER BUS. The ARTCC essential power bus supplies AC power to facility noncritical support equipment and utility systems such as indoor and outdoor site lighting; noncritical heating, ventilating, and air conditioning (HVAC) equipment; non-critical AC electrical convenience outlets; telephone diagnostic automatic line test equipment (ALTE); general test equipment; and ATC systems and equipment not yet commissioned or out of service and under test.

151. PHASE BALANCING. For consistent and optimum power delivery, the load impedance on each phase of a transformer should be identical. Phase balanced configurations also must accommodate same phase usage for a completely interdependent subsystem or an entire backup system.

a. Equal Phase Impedances. The load resistance and total reactance (inductive plus capacitive reactance) in each leg of a wye transformer or across each phase of a delta transformer shall be balanced to make the load impedance of each phase as nearly identical as possible. Loads shall be configured to achieve this phase balance.

b. Load Configuration. Loads shall be configured to utilize AC power phases to achieve maximum system backup reliability and to minimize possible outages. Load distribution for both phase balance and usage configuration is essential for consistent and reliable AC power. Special consideration also must be given to possible delays in operation due to critical subsystems which require a recovery time of more than 30 seconds after a power fluctuation or load transfer from a failed power system. See system configuration in Order 6950.15.

152. GROUNDING REQUIREMENTS. All ARTCC AC power system grounds shall be in accordance with NFPA 70, NEC. Some AC power protection grounds (also called equipment grounding conductors or safety grounds) may need to be upgraded when equipment is added or relocated in existing sites.

a. AC Power Protection Ground. An AC power protection ground wire shall accompany each phase or branch of AC power leaving a main service disconnect enclosure. An AC power ground wire shall accompany each AC phase ungrounded wire pair or AC phase and neutral (grounded conductor) feeder wire pair to each load on the phase branch. The AC power ground system for each AC phase from a transformer secondary winding shall be isolated electrically from all other AC phase ground wires branching from the main distribution panel. Each AC power ground system shall be isolated from all ARTCC single point and multipoint ground systems except on the EES. However, for a separately derived AC power source remotely located in an ARTCC, the shortest path for its AC power ground to terminate on the EES may be

achieved by connection to a nearby structural steel member connected directly to a ground rod in the EES.

(1) AC Power Ground Conductor. AC power ground conductors are copper wire with green insulation or insulation color coded green. Each branch or feeder AC power ground conductor is routed with its own AC power and neutral conductor pair through conduit, raceway, cable tray, or other path. Each branch and feeder AC power ground wire shall be sized for expected loading in accordance with FAA-C-1217, which specifies No. 12 AWG as the minimum size for power wiring. AC power ground wire (equipment grounding conductor) size also shall be in accordance with NFPA 70, Table 250-95.

(2) AC Power Ground Connections. The AC power ground system shall be isolated from the multipoint and single point ground systems, except on the EES, for reliable and consistent equipment performance and personnel safety. Each AC power ground conductor (equipment ground) also shall be isolated from any AC neutral (grounded conductor) or derived AC neutral, except in the main service disconnect means for each transformer. In each main service disconnect means, the AC power ground is connected to the AC neutral bus from which both share a connection directly to a ground rod in the EES. Any "Chassis ground" (ungrounded) equipment shall be isolated from the AC power ground (equipment ground) and from all grounding systems to maintain the integrity of each grounding system.

(a) Pigtail Power Cords. In a power cord pigtail wired into equipment, a green AC power protection ground wire shall be installed with the AC power wires. The equipment AC protection ground shall be continuous to the AC power protection ground terminal on the pigtail AC plug and SHALL NOT be common with AC neutral.

(b) Chassis AC Connector. When installed in an equipment chassis, an AC power connector through which power is applied to the equipment shall contain an AC protection ground pin on which the equipment AC protection ground, isolated from AC neutral, shall be terminated. Conduit, cable shields, equipment case grounding strap, or other electrically continuous paths SHALL NOT substitute for nor violate the isolation of a separate AC power protection ground wire.

(c) AC Power Receptacles. ARTCC AC power receptacles shall be UL approved grounding receptacles installed with separate AC power protection ground wires isolated from other grounding systems and from AC neutral. Each wire connection in an AC power receptacle shall be secured in accordance with NFPA 70 to avoid any fire hazard

from a high resistance connection. ARTCC critical AC power systems shall maintain the isolation integrity of AC power grounds in accordance with FAA-C-1217.

(3) AC Power Protection Ground Path. All branch AC power protection ground paths terminate on the AC power protection ground bus in the main AC service disconnect enclosure at the AC power entrance. With commercial AC grounded service (or ungrounded delta transformed to grounded wye service), the AC protection ground shall join its AC neutral only in its main service disconnect enclosure on the earth grounded AC neutral ground bus. In addition, Figure 5-3, *Main AC Service Enclosure Ground Split-Bolt Connection*, shows a mechanical connection used to ground the main AC disconnect enclosure to a ground conductor from its AC power protection ground bus.

b. Earth Electrode System Connection. The ARTCC AC power ground system requires an AC earth grounding electrode conductor from each main service disconnect means direct to the EES. The size of the grounding conductor shall be based on the size of the largest service entrance power conductor, in accord with NFPA 70, Table 250-94. The same size conductor used for the earth ground on the AC service transformer secondary shall be used for the earth ground conductor from the main service disconnect means, but the minimum size shall be No. 6 AWG as required in FAA-STD-019. To facilitate ground system testing, a disconnectable mechanical connection shall be used to connect the earth ground cable that connects the EES to the main AC service panel ground bus. Main AC service panels contain the only mechanical connections to the underground EES from which a power ground conductor is allowed to be disconnected during ground system testing.

c. Service Transformer Ground. The NEC requires that a ground conductor from the neutral of each commercial AC service transformer wye secondary go directly to earth ground. The earth ground conductor from each commercial wye secondary shall be connected directly to a ground rod in the site EES. Approval from the local power company shall be obtained before any work is begun to connect the service transformer earth ground to the EES. Close coordination with the power company is required before probing near active AC power cables. Only hand tools shall be used for digging.

d. Main Service Conductor Upgrade. Expanded power requirements or new equipment installation at an ARTCC may require an increase in the size of the grounding conductor between a main AC distribution wye transformer and a main AC service disconnect means neutral ground bus. In Chapter 4, Figure 4-1 indicates sizes of terminating ground

FIGURE 5-3. MAIN AC SERVICE ENCLOSURE GROUND SPLIT-BOLT CONNECTION

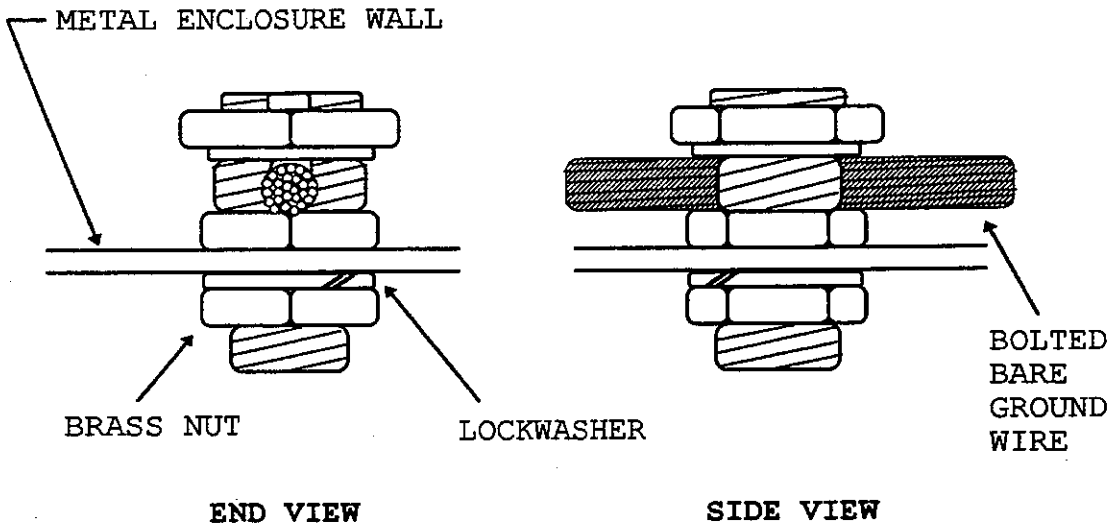

NOTES:

1. CONNECTOR TYPE IS BURNDY KC22, OR EQUAL
2. USE STUDDED SPLIT-BOLT CONNECTOR, NO. 4 AWG MINIMUM WIRE SIZE, AND BONDING LUG FOR EACH DISCONNECT SWITCH ENCLOSURE AND EACH OTHER MAIN AC SERVICE METAL ENCLOSURE
3. REFER TO FAA-STD-19 FOR BOLT TORQUE SPECIFICATIONS

conductors recommended for, or installed in, ARTCCs. The size of the grounding conductor connecting a substation transformer to the EES is based on the size of the largest service entrance power conductor from the transformer. The grounding conductor shall be at least No. 6 AWG per FAA-STD-019 and FAA-C-1217. The partial table below shows the size AC grounding conductor recommended for some ranges of large AC service conductors. Table 250-94 in NFPA 70 is the complete table to consult for correctly sizing an AC grounding electrode conductor.

Size or Equal Area of Largest Service Entrance Conductor	Corresponding Minimum Size of Grounding Electrode Conductor
3/0 AWG through 250 MCM	2
350 MCM through 500 MCM	0
600 MCM through 1100 MCM	2/0
Over 1100 MCM	3/0

Caution: To avoid injury and possible equipment damage, TURN OFF the AC power at the transformer input prior to testing or upgrading the main service transformer grounding conductor to the EES. Coordinate all system shutdowns with air traffic personnel.

153. INSTALLATION. AC electrical service and AC power distribution system installations in ARTCC facilities shall be in compliance with FAA-C-1217, Electrical Work, Interior, and National Fire Protection Association (NFPA) Title 70, National Electric Code (NEC), Article 250.

a. Main Service Disconnect Means. AC electrical service entering a facility shall terminate in a main service disconnect means enclosure.

(1) AC Power Ground Buses. All ground buses in a main disconnect enclosure shall be installed isolated from the enclosure. The AC neutral ground bus shall be connected directly to the EES and to any other ground buses in the enclosure. A neutral ground bus and an AC equipment protection ground bus shall be connected together only in the main service disconnect enclosure.

(a) Grounded Secondary AC Service. If the service transformer secondary is a wye transformer, which provides a grounded AC service neutral conductor, the AC neutral conductor shall be connected directly to the earth grounded neutral bus in the main service disconnect enclosure. Figure 5-4, *Grounded Secondary AC Service,* shows separate ground buses for AC neutral, equipment AC protection, and surge arrester grounds for a grounded wye secondary.

FIGURE 5-4. GROUNDED SECONDARY AC SERVICE

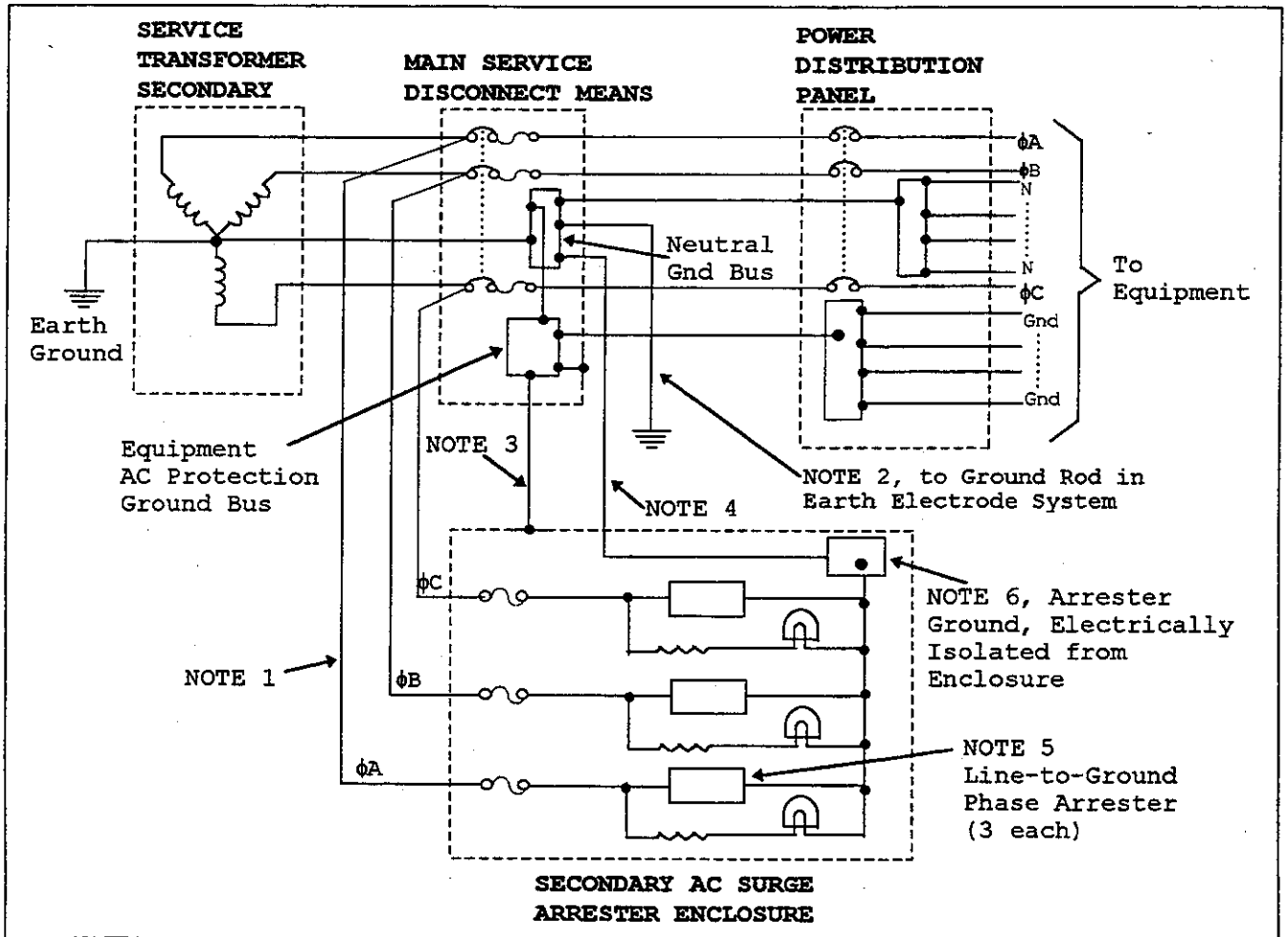

NOTES:

1. Arrester wire, No. 4 AWG minimum size, stranded copper, insulated, black, phase coded, short, direct connections with no sharp edges.

2. Earth ground conductor, No. 6 AWG minimum size per FAA-STD-019, stranded copper, insulated, color coded white. Short, direct connection with no sharp bends. No. 2 AWG is recommended minimum size here.

3. Enclosure Ground, No. 6 AWG minimum, stranded copper, insulated or bare, color coded green.

4. Arrester ground, No. 4 AWG minimum size, stranded copper, insulated, white, short, direct connections with no sharp edges.

5. May be installed in main service disconnect or separate enclosure. 3-Phase arrester shown. Delete 1 each phase arrester, fuse and indicator light for 1-phase 3-wire service. Delete 2 each for single phase arrester service.

6. Can be connected to earth grounded bus in main service disconnect means.

(b) Ungrounded Secondary AC Service. If AC service is provided from an ungrounded delta secondary transformer, an AC power protection ground bus directly connected to earth ground shall be provided in the main service disconnect enclosure to originate an equipment AC protection ground conductor. A branch of the AC protection ground conductor shall be distributed with each branch of AC voltage, as with grounded AC service. Equipment AC protection and surge arrester ground buses are shown in Figure 5-5, *Ungrounded Secondary AC Service*.

(2) AC Power Surge Arresters. Surge arresters are required on all AC power lines immediately after the lines enter a building. Surge arresters shall be installed within the main service disconnect enclosure or within a separate arrester enclosure located immediately adjacent to and less than 1 foot away from the main disconnect enclosure. A main AC service disconnect enclosure containing surge arresters and separate ground buses is shown in Figure 5-6, *Main AC Panel Service Disconnect Enclosure with Arresters*. In Chapter 4, Figures 4-25 and 4-26 each show surge arresters in a separate attached enclosure. AC power surge arresters shall be connected on the supply (line) side of the main disconnect switch. The only exception is where a commercial power outage can not be allowed for arrester installation, making line side connection impossible. In such a case the arresters shall be connected on the line side of the load line fuses immediately after the disconnect switch in the main service disconnect enclosure.

b. AC Power Service Wireways. Incoming and interior AC power service shall be distributed in electrically continuous ferrous metal conduit or duct which provides EMI protection and EMC. AC power wires in a cable tray shall be shielded by ferrous metal from communication and control cables and from DC power wires in the same cable tray. AC power feeder runs to racks also shall be enclosed in ferrous metal for EMI protection. Typical cable runs on cabinet tops are shown in Figure 5-7, *Typical Cabinet Top Wireway Layout, Top View*, and Figure 5-8, *Typical Cabinet Top Wireway Installation, Elevation View*. Under raised flooring also, AC power service runs are enclosed in metal wireways and conduit, as shown in Chapter 6, Figure 6-3.

(1) Conduit. Conduit is required for AC power system reliability. AC power lines shall be run in conduit which provides EMC, EMI protection, physical damage protection, and/or environmental protection required in damp, concealed, or underground run locations.

(a) Steel (Ferrous) Conduits. Continuous heavywall, zinc coated, rigid steel conduit gives complete protection in all

FIGURE 5-5. UNGROUNDED SECONDARY AC SERVICE

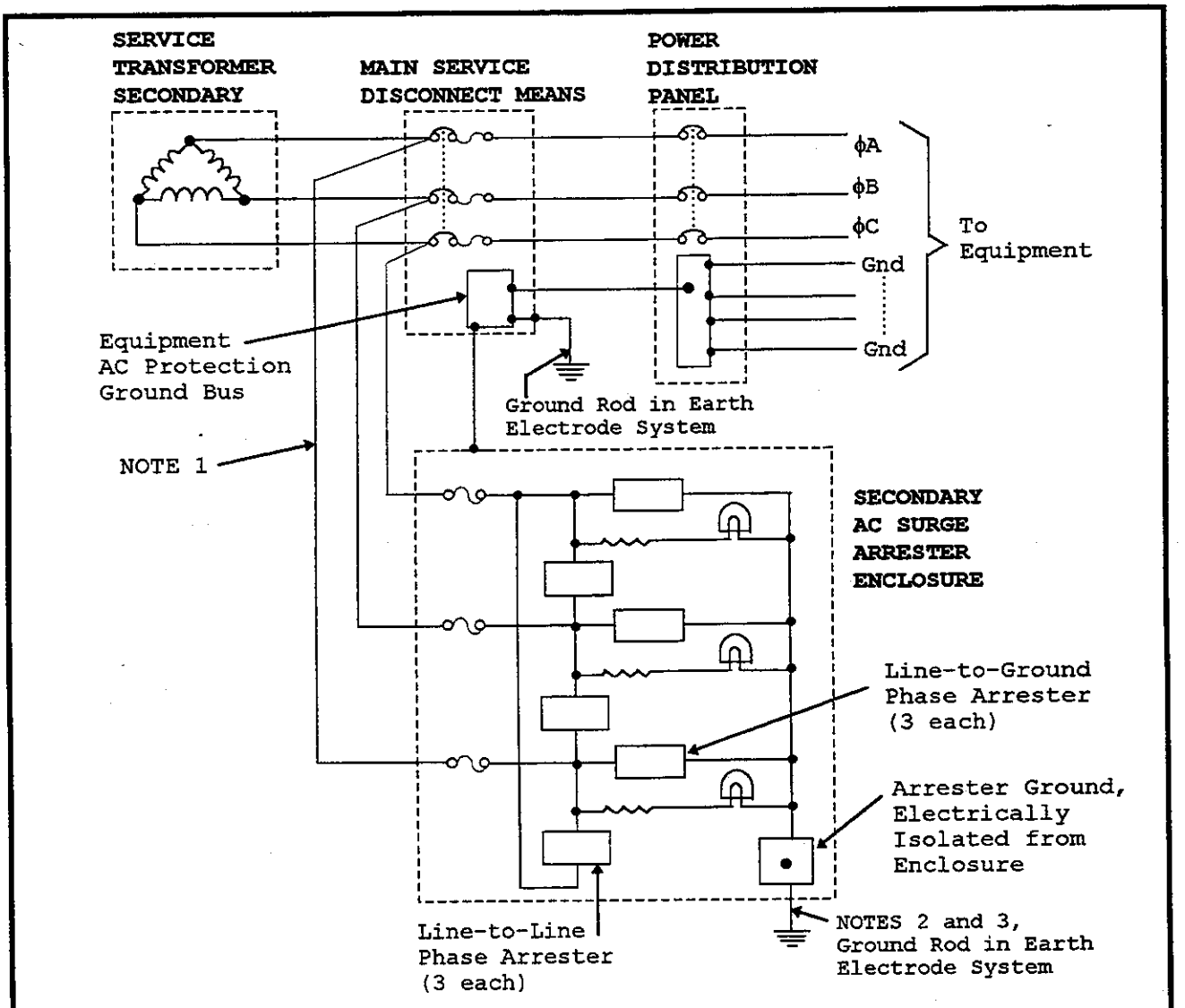

NOTES:

1. Arrester wires, No. 4 AWG minimum size, stranded copper, insulated, black, phase coded. Short, direct connections with no sharp bends.

2. Arrester earth ground conductor, No. 6 AWG minimum size per FAA-STD-019, stranded copper, insulated, color coded white. Short, direct connection with no sharp bends. No. 2 AWG is recommended minimum size here.

3. Can be connected to earth grounded bus in main service disconnect means.

FIGURE 5-6. MAIN AC PANEL SERVICE DISCONNECT ENCLOSURE WITH ARRESTERS

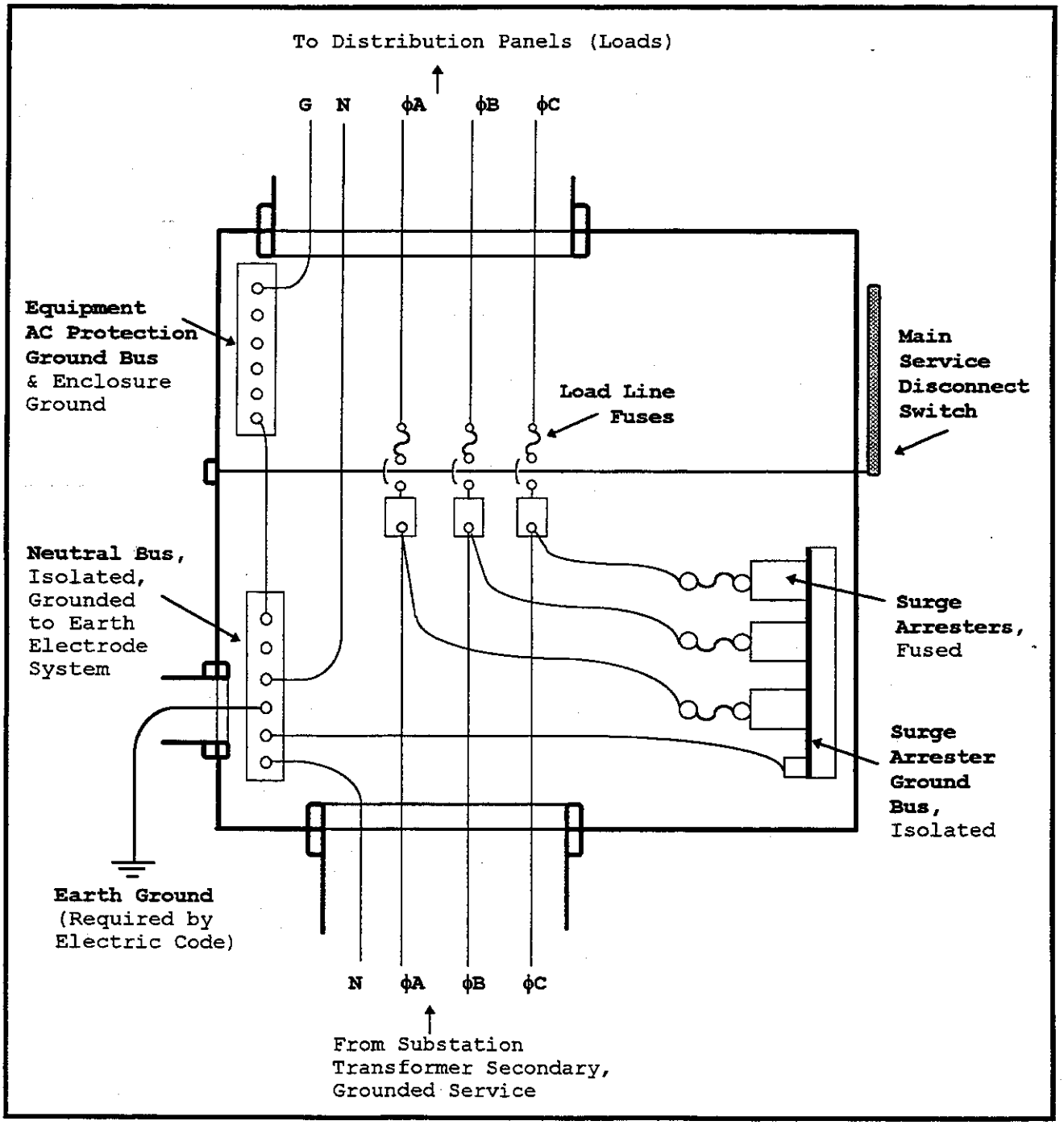

FIGURE 5-7. TYPICAL CABINET TOP WIREWAY LAYOUT, TOP VIEW

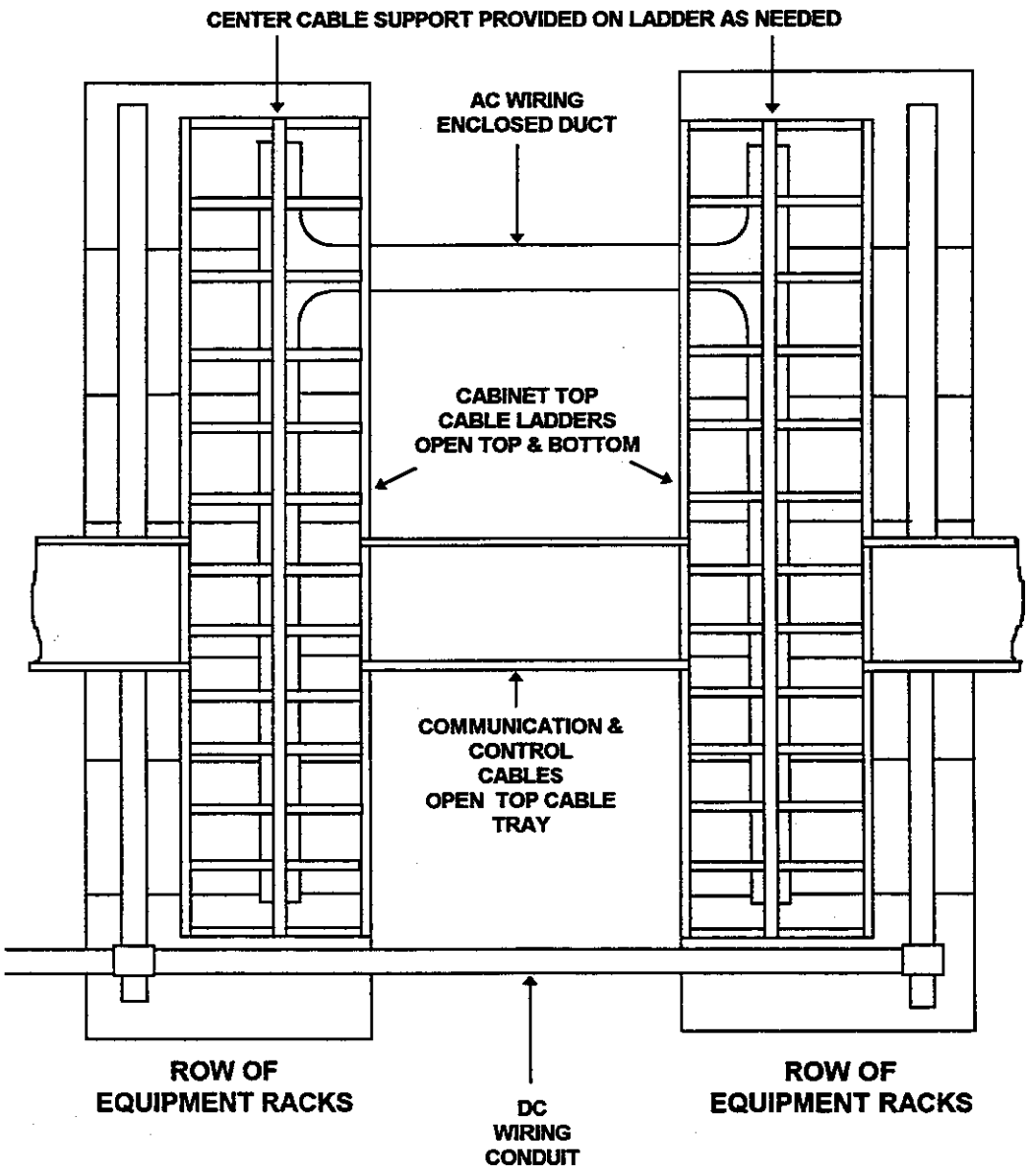

NOTE: Cabinet tops must be closed to protect from EMI when cables are distributed on cabinet top cable ladders.

FIGURE 5-8. TYPICAL CABINET TOP WIREWAY INSTALLATION, ELEVATION VIEW

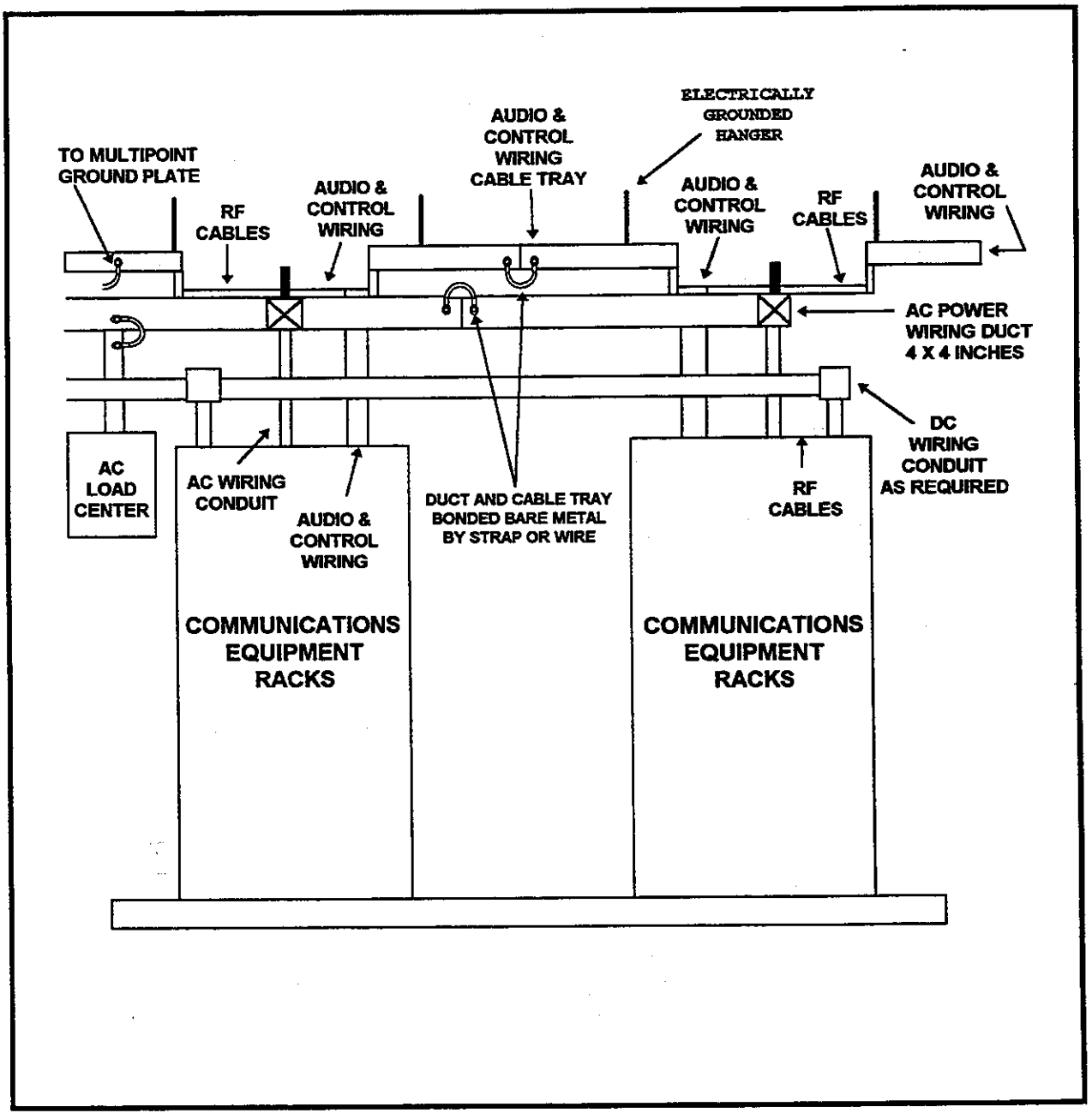

locations. Zinc coated steel intermediate metal conduit (IMC) shall not be used in hazardous locations. Electrical metallic tubing (EMT) may be used only in dry interior locations not subject to any physical damage. A continuous ground wire shall be bolted to each section of metal conduit. Where slight movement or vibration may occur, flexible steel conduit may be used in 18-24 inch lengths minimum, as permitted by the NEC, to accommodate usage with raised floors. Each flexible conduit section shall have a grounding bushing at each end connected to the continuous ground wire.

(b) Non-ferrous Conduits. Rigid aluminum conduit shall not enclose nor come in contact with bare copper wire nor enclose conductors requiring electromagnetic shielding, such as AC or DC power lines. Rigid plastic heavywall PVC conduit provides no EMC or EMI protection and may be used only underground or in concrete.

(2) Metallic Duct. Branch power wires may be installed in enclosed ferrous metallic square duct above equipment racks in exposed areas. The duct shall conform to UL Standard 870 and shall have hinged tight covers secured for EMI protection and for EMC.

c. AC Power Wiring. AC power wiring shall be installed in accordance with FAA-C-1217. AC power wires shall not be routed with communication, control, or DC power wires unless isolated from them by a ferrous metal barrier or by enclosure in a separate ferrous metal duct for EMI protection and EMC. No more than one AC power wire from each phase of a 3-phase AC source shall be run with one neutral conductor, and the AC neutral conductor must originate from the same main service disconnect as the AC phase wires.

(1) AC Conductors. AC power conductors shall be copper wires with 600 volt insulation in accord with Federal Specification J-C-30. AC conductors size No. 8 AWG and larger shall be stranded copper. No. 10 AWG and smaller size conductors shall be solid copper. Conductor insulation shall be thermoplastic or thermosetting type THW, THWN, or XHHW for general use. Type THHN insulation is for use in dry locations only. The minimum size for AC power branch conductors shall be No. 12 AWG as specified in FAA-C-1217. Table 5-1, *Wire AC Characteristics*, lists circuit AC ampere ratings for some common wire sizes. See NEC Article 310 for more detail.

(2) Color Coding. Color coding of AC conductors shall be continued consistently throughout the ARTCC so that AC conductors on each particular phase of AC power, including all branch and feeder wires, can be identified easily. Color coding, and any other markings necessary to identify AC conductors from separate but similar AC power

sources using the same path, shall be visible in all junction and pull boxes, accessible raceways, panelboards, outlets, switches, and at all terminations. Markings facilitate tracing paths of each AC phase, neutral, and AC protection ground conductor. Plain conductors may be

TABLE 5-1. WIRE AC CHARACTERISTICS

CIRCUIT RATING (Amps)	15 A	20 A	30 A	40 A	50 A
Minimum Wire Size (AWG)	12	12	10	8	6
Overcurrent Protection (Amps)	15	20	30	40	50
Receptacle Rating (Amps)	15-20	20	30	40-50	50

NOTE: Wire fuse rating = 3 times the circuit Amp rating.

color coded by applying colored tape tracers on a minimum of 3 inches of cable length at least each 3 feet and at each visible location, including where conductors are visible through access ports.

(a) AC Phase Wires. Ungrounded AC voltage wire colors shall be consistent in the facility as follows:

Single Phase	Three Phase	
120/240 Volts	120/208 Volts	277/480 Volts
Line A - Black	Phase A - Black	Phase A - Yellow
Line B - Red	Phase B - Red	Phase B - Brown
	Phase C - Blue	Phase C - Orange

(b) AC Neutral Wires. AC neutral (grounded conductor) wires shall be coded continuous white for 120/240 volt and natural gray for 277/480 volt service unless identical color wires from a similar commercial AC power service transformer are run in the same conduit or wireway. If a path must be shared, a similar color neutral wire from a different AC power service transformer shall be coded with identifiable colored tracers, but not green, on the white (or gray) insulated neutral conductor throughout its path.

(c) AC Power Ground. The AC power protection ground conductor (also called the equipment ground) shall have plain green

insulation. The AC power ground shall be a separate wire and always shall be electrically isolated from the single point ground system (green with yellow tracer). The AC power ground also shall be isolated from the multipoint ground system and building structural steel, except in a case where the AC power ground of an interior distribution transformer must be grounded to building structural steel to reach the EES more directly. The multipoint ground system (green with orange tracer) shall NOT be used in place of an AC power ground conductor.

(3) Conductor Identification. In addition to color coding, each AC service line, each phase branch conductor, and neutral shall be identified by approved markers to show panel and circuit numbers. Conductor identification shall be provided at all terminations and within each enclosure where a tap, splice, or termination is made. Hand lettering or marking is not acceptable. Terminal and conductor identification shall match that shown on approved shop drawings. Typical panel numbering is shown in Figure 5-9, *Power Distribution Organization*.

d. AC Power Circuit Breakers. Each AC power (ungrounded) conductor shall be distributed to AC phase branch circuits through circuit breakers on either a single phase or 3-phase AC distribution panelboard. Each circuit breaker shall be rated at no more than the ampere rating of the conductors and circuit it feeds. Both the AC power protection ground wire (green) and the AC service neutral or derived AC neutral wire (white or gray) shall accompany the AC power wires to the power distribution panelboard. From there in compliance with FAA-C-1217, an AC neutral conductor and an AC ground conductor shall be distributed with each AC branch circuit without the ground and neutral wires going through any circuit breakers. Schematics for AC power panelboards are shown in Figure 5-10, *Typical ARTCC Single Phase AC Power Panelboard*, and Figure 5-11, *Typical ARTCC 3-Phase AC Power Panelboard*.

e. Wiring Installation Tests. The following tests verify system compliance and shall be performed by the installer upon completion of each new installation. Applicable tests shall be repeated for periodic verification of system integrity, to diagnose a system problem, or to assure maintenance of system integrity after a repair or modification involving connections to AC power wiring or AC ground.

(1) Load Balancing. Current shall be measured in each phase conductor of a main AC service system and in each phase feeder to a panelboard. Loads shall be redistributed if current measured for any two phases is found to differ by more than 20 percent. Each phase

FIGURE 5-9. POWER DISTRIBUTION ORGANIZATION

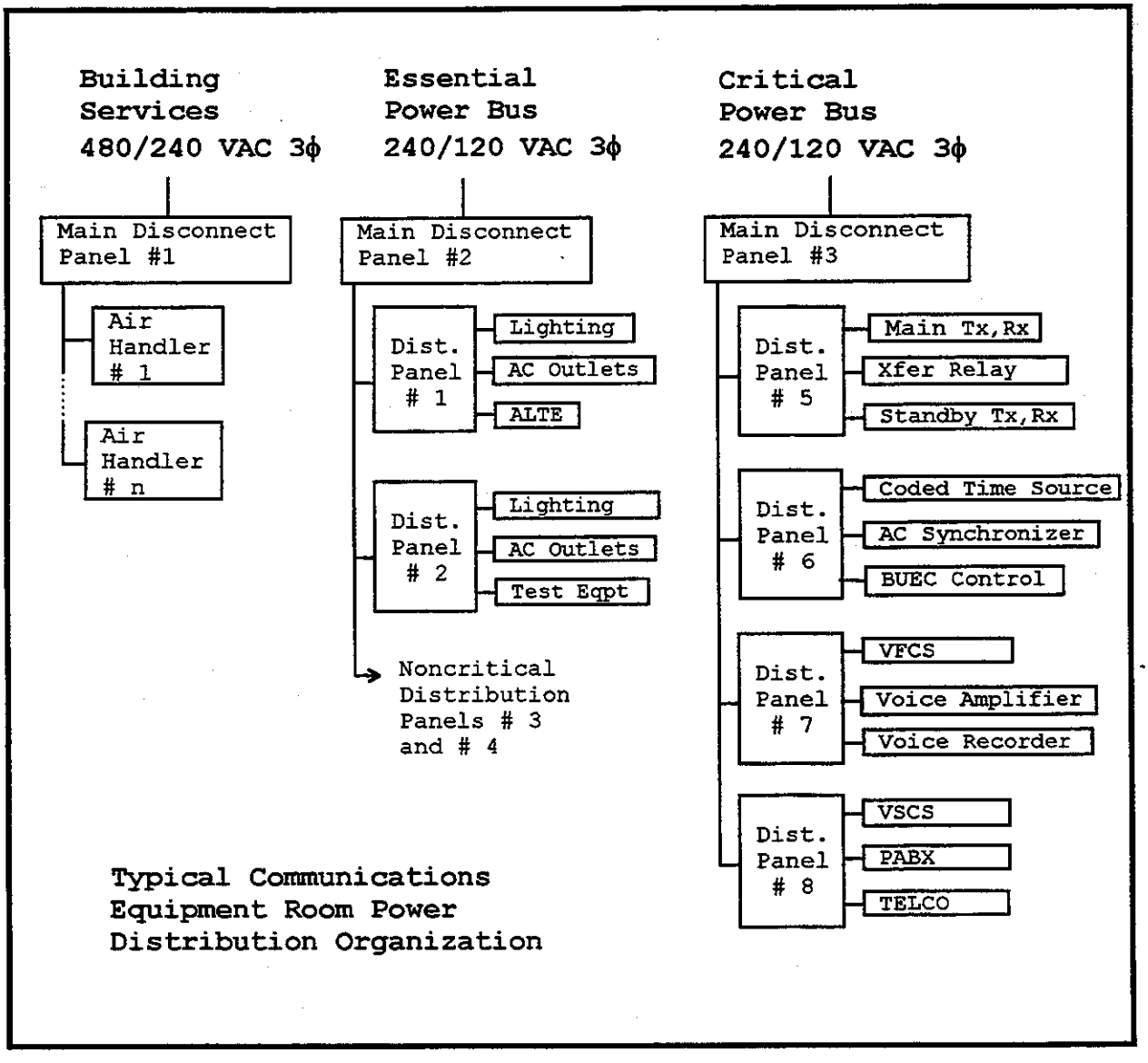

FIGURE 5-10. TYPICAL ARTCC SINGLE PHASE AC POWER PANELBOARD

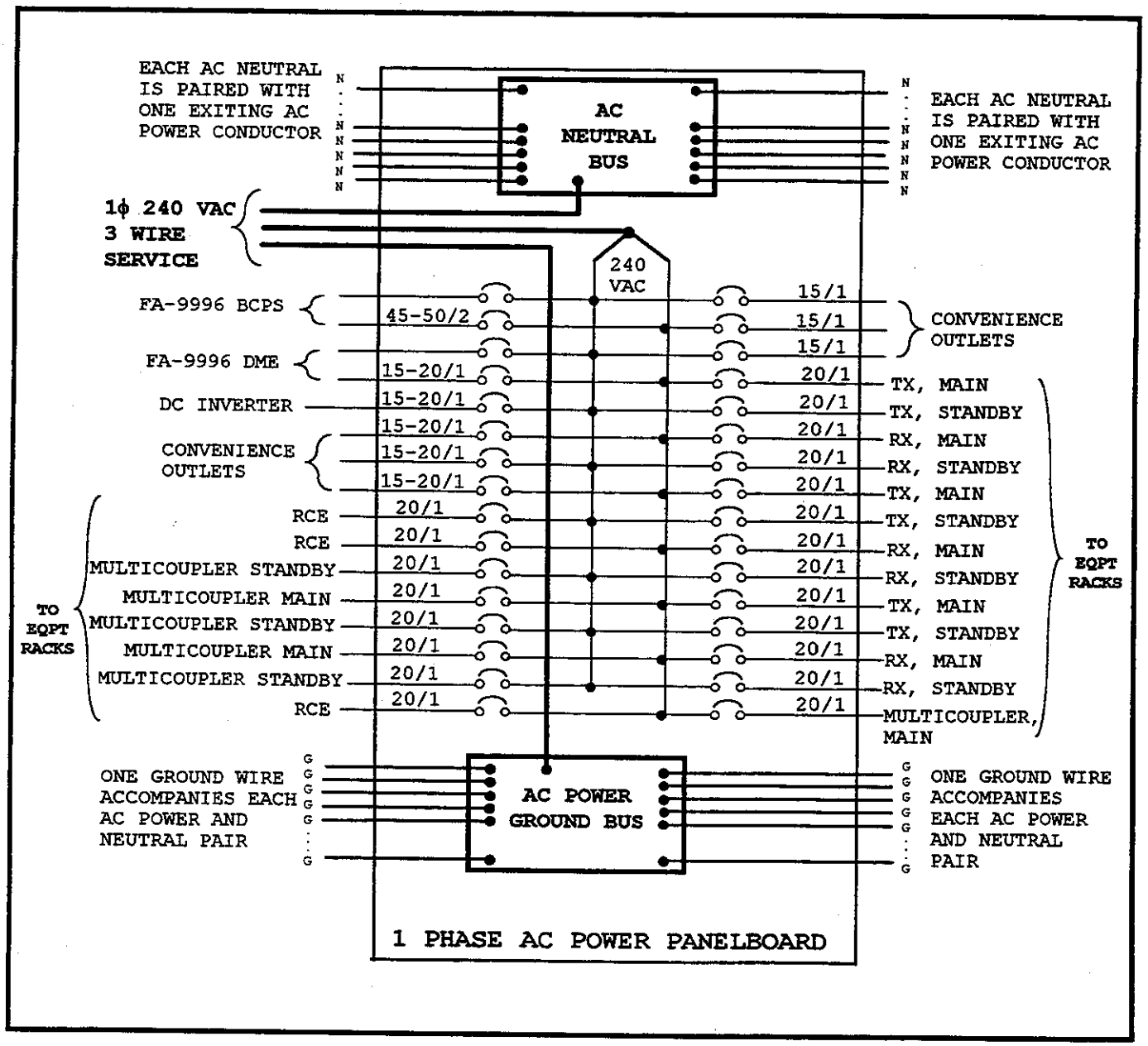

FIGURE 5-11. TYPICAL ARTCC 3-PHASE AC POWER PANELBOARD

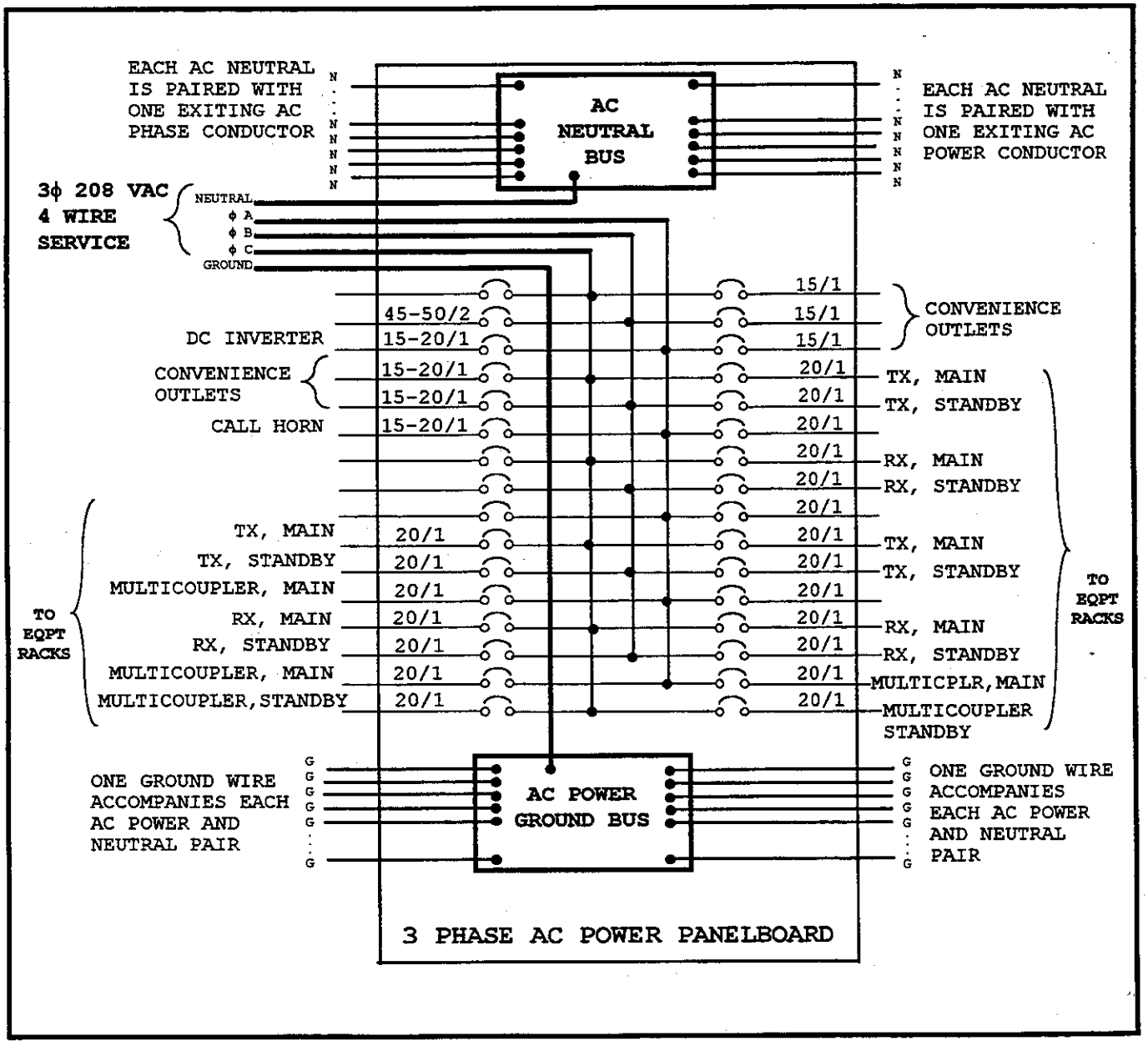

shall be loaded to no more than 80 percent of the rating of its overcurrent protective device.

(2) Insulation Resistance Test. New AC power installations shall be tested for shorts and grounds before connection to any facility fixture or equipment. Phase-to-phase and phase-to-ground isolation resistance for both AC distribution and AC branch conductors shall measure a minimum of 30 megohms using a 500 volt DC insulation resistance tester for compliance with FAA-C-1217.

(3) Neutral Isolation Test. When all AC branch circuits for all phases of the AC power service are installed, the AC neutral conductor from the main service disconnect enclosure shall be temporarily disconnected from its ground bus to allow verification of complete isolation from ground for the installed AC neutral wires. Using an ohmmeter set on the Rx1 scale, any connection remaining between AC neutral and any ground system shall be located, shall be disconnected, and shall be connected properly to preserve complete isolation between AC neutral and ground. When complete isolation is verified, reconnect the AC neutral conductor to its AC ground bus in the main service disconnect enclosure.

(4) Earth Resistance Test. The resistance of the EES shall be measured both with and without the AC neutral conductor from the incoming service transformer connected to the ground bus in the main service disconnect enclosure. Using an earth resistance tester, both measurements shall comply with the required electrode-to-earth resistance of 10.0 ohms or less.

(5) Operating Test. After any new installation of interior AC wiring is completed and tested for proper continuity and isolation, an operating test of equipment shall verify correct operation of facility equipment in accordance with specification FAA-C-1217.

154.-158. RESERVED.

SECTION 2. DC POWER

159. GENERAL. Upon loss of commercial AC power, the DC power system in an ARTCC may have to furnish 600 VDC to supply three phase AC power to the critical bus.

a. DC Power System. The DC power system consists of an AC power interface to the DC power rack, AC voltage rectifiers to produce DC for the battery charger/eliminator systems which maintain charge on the on-line backup batteries, and DC power inverters to convert DC to an AC power output. The on-line backup battery system is part of the ARTCC UPS. A simplified block diagram of a DC power system is shown in Figure 5-12, *ARTCC DC Power System Block Diagram*.

b. Power Conditioning System (PCS). A PCS can condition commercial AC power by conversion to filtered DC power and then back to noise free reliable AC power. When the quality of commercial AC power is unacceptable and cannot be improved, conditioned AC power required for the ARTCC critical bus must be provided by the ARTCC. Adding AC rectifier, switching, and filtering equipment to interface with UPS system equipment can provide a PCS. An uninterruptible power module (UPM) may be used for power conditioning and battery recharging.

160. DC POWER DISTRIBUTION. Control of DC power distribution shall be through the DC power rack. The DC power rack contains the AC input panel, AC voltage rectifiers, battery charger and eliminator systems, load distribution panels, the battery disconnect panel, and alarm and monitor panels as shown in Figure 5-13, *Typical DC Power Rack*. DC voltage shall be supplied only to equipment racks which utilize DC power. Racks containing only DC powered equipment shall have no permanently installed AC power outlets.

a. AC Power Interface. The critical power AC load center provides AC power to the AC input panel in the DC power rack. AC power is required for the AC voltage rectifiers. During commercial power outages, critical AC power is supplied to the AC input panel from one or more standby engine driven AC generators.

b. AC Rectifiers. AC rectifiers furnish DC voltage to battery chargers and to the ARTCC DC load center. Redundant backup AC power generators and AC rectifier systems shall have capacity sufficient to supply AC power to all ARTCC critical load equipment and to recharge battery banks within 12 hours following a 4-hour operation of the ARTCC critical load from only UPS batteries. Rectifiers shall be solid state devices. Ripple on rectifier DC voltage output shall not

FIGURE 5-12. ARTCC DC POWER SYSTEM BLOCK DIAGRAM

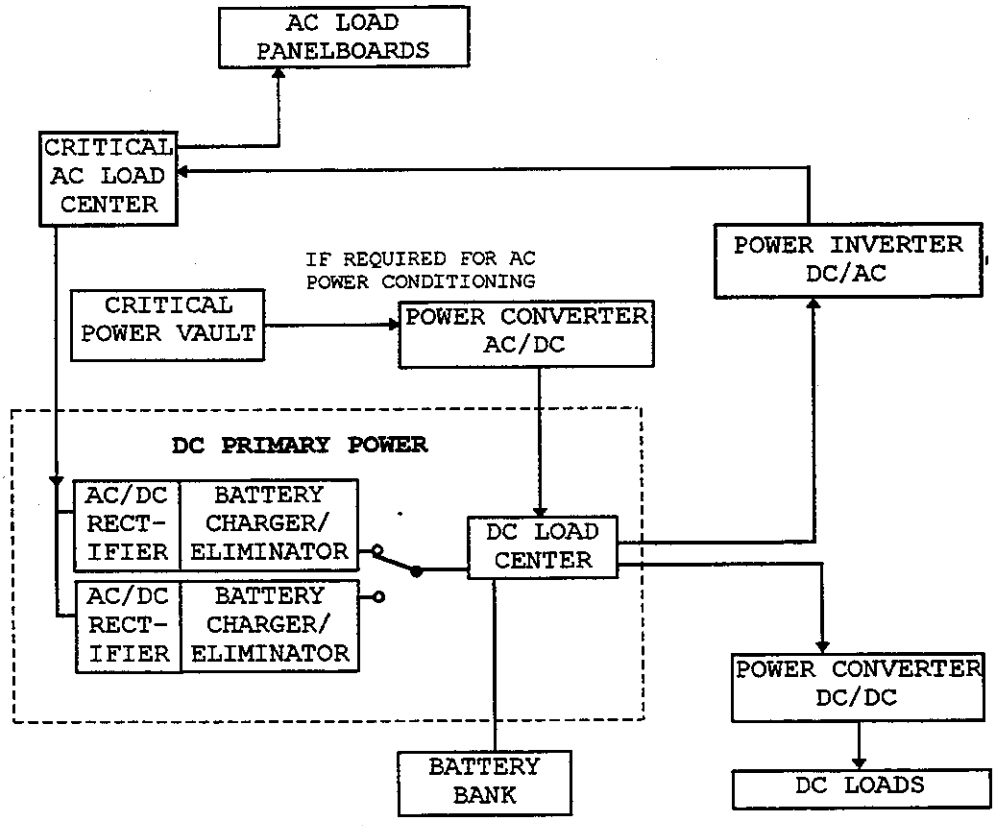

NOTE: REDUNDANT RECTIFIER AND BATTERY CHARGER/ELIMINATOR SYSTEMS ARE AVAILABLE FOR BACKUP TO AVOID SINGLE POINT FAILURE.

FIGURE 5-13. TYPICAL DC POWER RACK

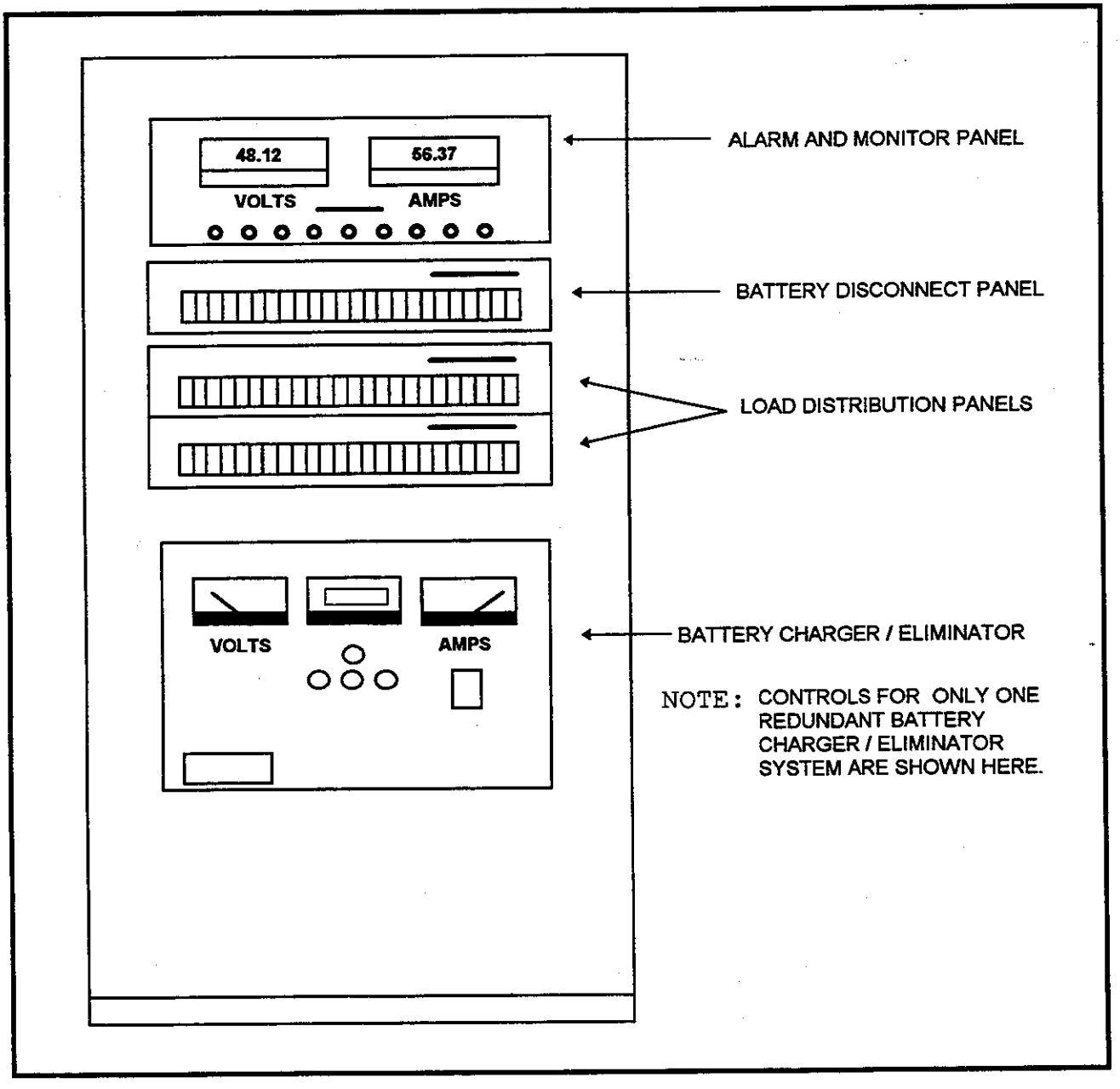

exceed 100 millivolts (mV) peak when measured without UPS batteries connected. DC output from AC rectifiers shall be compatible with telephone and microwave equipment and shall be acceptable to those industries.

c. Battery Chargers. Redundant AC rectifier and battery charger systems are mounted in the DC power rack. They maintain the DC charge on or recharge as necessary the backup on-line UPS batteries whenever AC power is available. AC power can be supplied either commercially or from operation of engine generator sets.

d. Batteries. ARTCCs require banks of storage batteries to provide on-line backup power as needed. Gel cell type sealed batteries which require no special ventilation and have a ten year life expectancy are preferred. ARTCC backup battery bank capacity shall be capable of sustaining critical ATC operation for a minimum of eight hours to provide uninterrupted control for air traffic safety.

e. Battery Disconnect Panel. The NEC requires that each battery system have a disconnect means to remove the batteries from the DC power system. A manual disconnect panel is mounted in the DC power rack to allow discharging batteries to be disconnected from the load when system DC voltage drops below a pre-set minimum. An alarm actuated by closure of a dry contact relay shall be provided to indicate that the system DC voltage level has dropped below the required minimum.

f. DC Distribution Panel. The DC distribution panel in the DC power rack shall contain circuit breakers for DC loads. Each breaker shall be dedicated to a particular function or redundancy and shall be sized accordingly to provide overload protection for DC to AC power inverters, telephone equipment, DC/DC converters, and other DC loads. Figure 5-14, *Typical ARTCC DC Load Distribution*, shows a simplified DC power distribution diagram.

g. Battery Alarm and Monitor Panel. The battery alarm and monitor panel in the DC power rack monitors status and continuity of battery charging, battery power level, and circuit breaker continuity. Indicators found on the panel are shown in Figure 5-15, *Battery Alarm and Monitor Panel*.

161. DC POWER-UP PROCEDURES. DC power-up procedures described below shall be performed only after both AC power wiring and DC distribution wiring have been completed.

FIGURE 5-14. TYPICAL ARTCC DC LOAD DISTRIBUTION

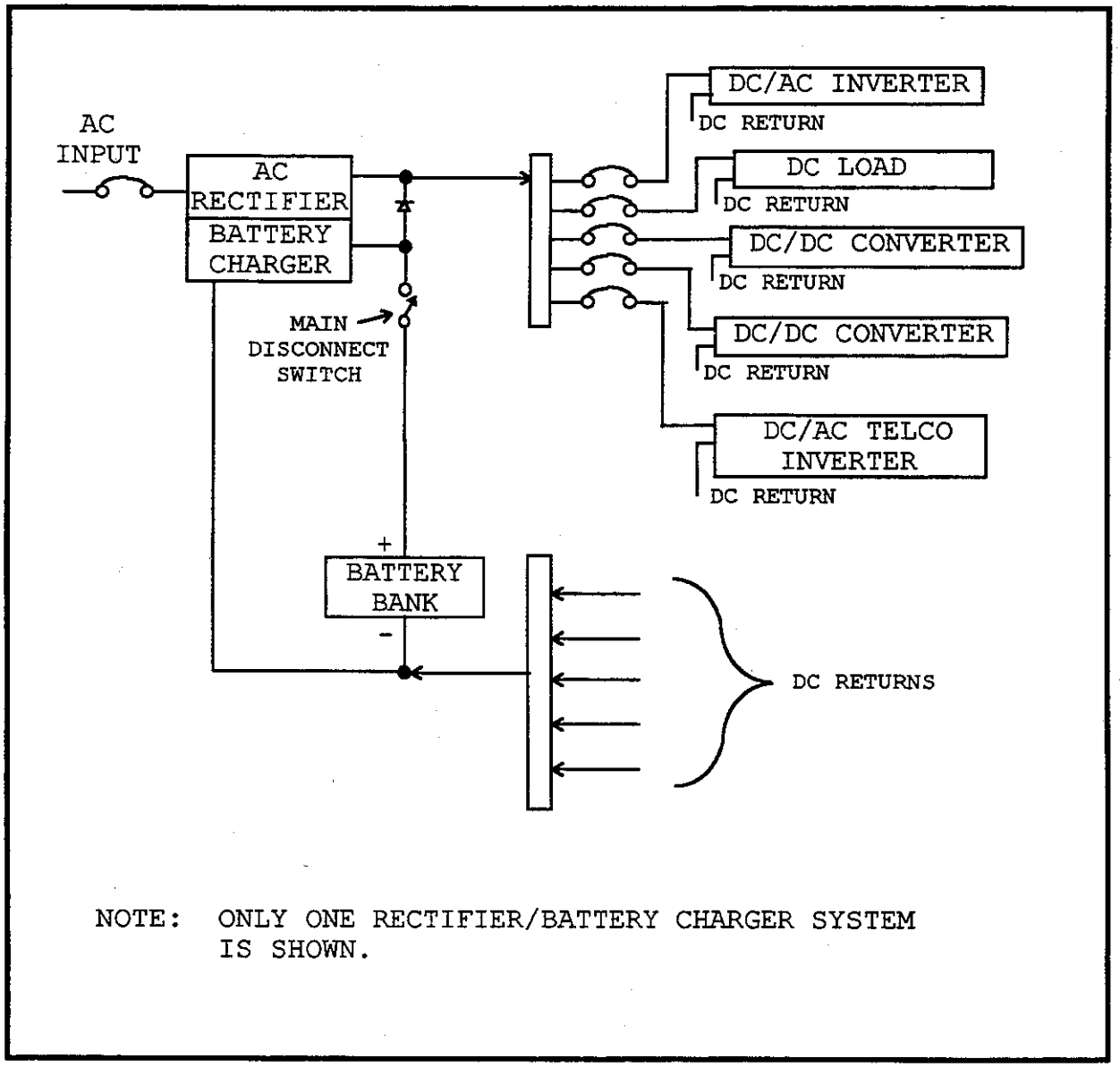

NOTE: ONLY ONE RECTIFIER/BATTERY CHARGER SYSTEM IS SHOWN.

FIGURE 5-15. BATTERY ALARM AND MONITOR PANEL

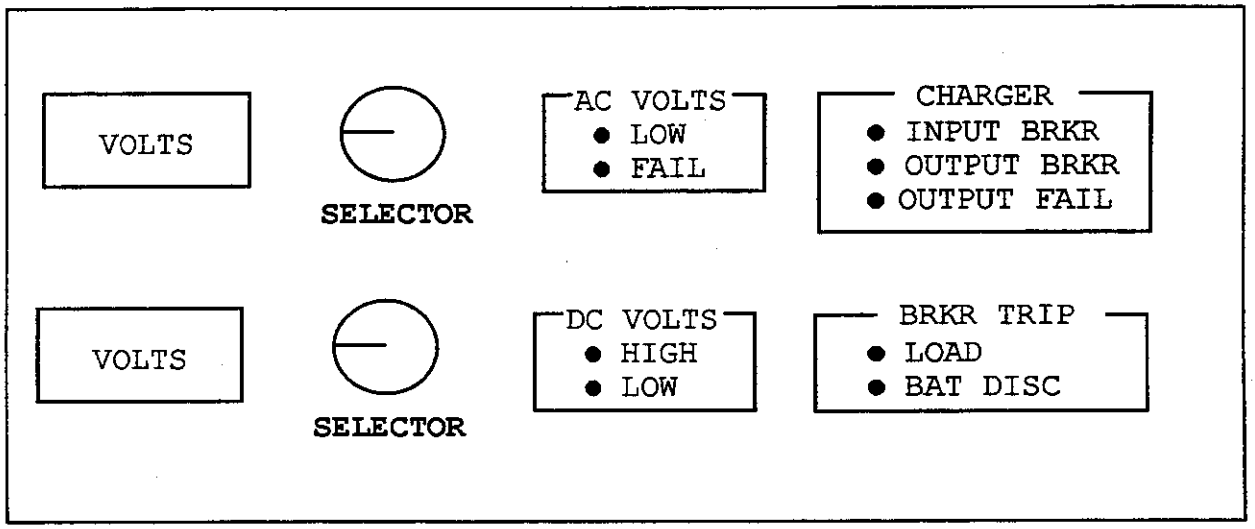

NOTE: Failure-sensing circuits are provided both for 48 VDC and 46 VAC power supplies. Aural/visual alarm indicators are located in the equipment room or in operating areas. Fuse failure alarms also may be used to monitor 48 VDC and 46 VAC circuits.

a. Charge Batteries. Close the battery safety switch. This connects filter capacitors to the battery bank DC output. If the initial surge current trips the safety switch, reset and close the switch. It will take one to two minutes for the batteries to charge the capacitors to 89 percent of the battery terminal float voltage. When the voltage reaches 85 percent, close the DC power supply output circuit breakers and reset the power supply in accordance with the instruction manual.

b. Adjust Power Supply. Close the power supply AC input circuit breakers. Adjust power supply voltages to meet system requirements. Procedures for this adjustment are found in the equipment instruction manual. Charge the battery system until the charging current has been stabilized for three hours. Adjust the power supply for the recommended float voltage of 2.25 to 2.28 volts for each cell.

162. GROUNDING REQUIREMENTS. AC power service furnished to AC powered equipment installed in the DC power rack shall include the appropriate branch AC power ground wire (equipment ground) from the AC power interface. DC powered inverters producing AC power shall supply, with each outgoing AC power and neutral wire pair, an AC power ground wire to connect directly to the specific AC power ground of the replaced commercial AC power. Racks and equipment chassis which are electrically isolated from all other grounding systems shall be grounded to the ARTCC multipoint ground system.

CAUTION: DO NOT CONNECT the negative side of any battery or any branch DC power return wire to any grounding system.

163. INSTALLATION. DC electrical service and DC power conversion installations in ARTCC facilities shall be compliant with FAA-STD-032, *Design Standards for National Airspace Physical Facilities;* FAA-C-1217, *Electrical Work, Interior;* and National Fire Protection Association (NFPA) Title 70, *National Electric Code* (NEC), Article 250.

a. Uninterruptible Power Supply (UPS) System. A UPS shall be installed in each ARTCC to maintain virtually uninterrupted power to the ARTCC critical power bus when commercial AC power fails or is unreliable. UPS battery backup power is required to provide power for continuous control of air traffic safety while a standby engine generator set is brought on line to replace the failed commercial AC power. A UPS system is powered by a bank of on-line storage batteries whose charge is maintained from AC power, either commercial or from an engine generator. Some UPS equipment also can be used with an AC

power conditioning system (PCS) to provide reliable conditioned AC power to the critical bus when commercial power is out of tolerance.

(1) UPS Battery Systems. On-line backup UPS battery systems shall be installed which can provide continuous phase synchronized power automatically with sufficient capacity to supply ARTCC critical bus loads as needed. Battery systems shall be in accordance with FAA Orders 6980.24, *Battery Theory and Selection Guidelines*, and 6980.26, *Battery Backup Power Systems - Theory and Selection Guidelines*.

(2) Engine Generators. Upon loss of commercial AC service, AC power to the ARTCC critical bus is supplied first using the ARTCC UPS. Then the critical bus load is assumed by AC power from an engine generator set, which also recharges the UPS batteries. Two or more standby engine driven AC power generators shall be installed in a separate building located between the facility commercial power substation transformers and the ARTCC facility, preferably near the ARTCC critical power vault. Power lines from the engine generator room to the ARTCC shall be installed underground using a path as short and direct as possible. Each engine generator installation shall have a State Clean Air Act Permit to Construct and Operate or have proof of exemption from permit requirements before construction, installation, and operation may begin.

(3) AC Power Source Switch. Manual switches shall be installed which allow the source of ARTCC critical AC power to be switched between AC commercial service and one or more engine driven AC generators. Switches also supply available AC power automatically to selected AC rectifier and battery charge systems in the DC power system. On-line AC powered rectifier and battery charge systems supply DC voltage to their connected battery banks and DC loads while redundant systems remain on standby to avoid single point failure.

(4) DC/AC Power Inverter. A DC/AC power inverter converts DC to AC power in order to supply continuous AC power to the ARTCC critical load when needed. On-line AC power synchronizers maintain phase angle synchronization whether commercial AC power or on-site generated or conditioned AC power is in use.

b. Power Conditioning System (PCS). Power conditioning may be utilized at an ARTCC which experiences unacceptable commercial AC power line disturbances or fluctuations on its critical power bus or is supplied unreliable AC power service as described in FAA Order 6950.25, *Use of Electrical Power conditioning Devices at FAA Facilities*. If the commercial AC power cannot be improved

sufficiently with the use of AC power enhancement devices such as surge arresters and isolators described under AC Power earlier in this chapter, a UPS system may be utilized as a PCS to provide reliable AC power for the ARTCC critical power bus.

c. DC Power Wireways. DC power service shall be distributed in electrically continuous ferrous metal conduit or duct to protect the DC power from picking up EMI and redistributing the effects. DC power wires in a cable tray shall be shielded by ferrous metal from communication and control cables and from AC power lines in the same cable tray. Enclosing DC power runs in continuous ferrous metal prevents their exposure to induced transients from other circuitry. Also, all DC power feeder paths to racks shall be enclosed in continuous ferrous metal. Typical cable tray orientations are shown in Figure 5-7, *Typical Cabinet Top Wireway Layout, Top View*, and Figure 5-8, *Typical Cabinet Top Wireway Installation, Elevation View*.

(1) Conduit. For system reliability, DC power lines shall be run in conduit which provides protection from EMI, from physical damage, and/or from environmental effects in damp, concealed, or underground runs as needed.

(a) Steel (Ferrous) Conduits. Continuous heavywall zinc coated rigid steel conduit gives complete protection in all locations. Zinc coated steel intermediate metal conduit (IMC) shall not be used in hazardous locations. Electrical metallic tubing (EMT) may be used only in dry interior locations not subject to any physical damage. A continuous ground conductor shall be bolted to each section of metal conduit. Where slight movement or vibration may occur, flexible steel conduit may be used in nominal 12 inch lengths, as permitted by the NEC, but shall require a second ground conductor across each flexible connection.

(b) Non-Ferrous Conduits. Rigid aluminum conduit shall not enclose bare copper wire or conductors requiring electromagnetic shielding, such as AC or DC power lines. Rigid plastic heavywall PVC conduit provides no EMC or EMI protection and may be used only where EMI protection is not a requirement in exterior installations, underground, or embedded in concrete.

(2) Metallic Duct. Square metallic duct for branch power wires may be installed above equipment racks in exposed areas only. The duct shall conform to UL Standard 870 and shall have hinged tight covers secured for EMI protection and for EMC.

d. DC Power Wiring. DC power wiring shall be installed in accordance with FAA-C-1217. DC power wires shall not be routed with communication, control, or AC power wires unless isolated from them for EMI protection by a ferrous metal barrier or by enclosure in a separate ferrous metal duct.

NOTE: Do not install AC convenience outlets in racks containing only DC powered equipment except on a temporary basis.

(1) DC Conductors. Both a DC voltage feed wire and a DC return wire shall be installed together as a pair for each DC voltage supplied to DC powered equipment. No. 10 AWG or larger copper wire shall be used according to the load requirement. Depending upon wire size, each DC wire pair shall be twisted together a minimum of times per foot in accordance with FAA Order 6950.19, Table 2-25, to minimize noise picked up by any unshielded portion of the DC power wire pair.

(2) Color Coding. For each DC wire pair, the positive voltage wire shall be coded red or a light color and the negative voltage wire shall be coded black or a dark color. Color coding and any other marking required shall be consistent and shall be visible at each termination and at each accessible inspection port in conduit runs, in junction boxes, and on distribution panels to facilitate tracing circuit continuity.

164.-170. RESERVED.

CHAPTER 6. EQUIPMENT INSTALLATION METHODOLOGY

SECTION 1. SYSTEM DESCRIPTION

171. GENERAL. This section discusses selection and installation of modular cabinets, racks, and cable ducts, trays, and conduit in ARTCCs. Recommended standardized practices are based upon compliance with UL, NEC, OSHA, and FAA standards and upon sound engineering judgment used in the best practices found in existing FAA installations.

172. CABINETS. Modular steel cabinets are used in ARTCC facilities to accommodate standard 19 inch wide rack-mount equipment. Modularity shall include a uniform height of 83 inches to allow cable trays and wiring ducts to be mounted level on top of or across cabinet rows as required. Modular cabinet depth shall be 22 inches or 25-1/2 inches. Cabinet racks may be open frames or may have sheet metal sides, rear access doors, and/or optional front access doors.

a. Cabinet Rack Standard Details. Specific details and drawings for modular cabinet racks are found in FAA-E-2672, *Rack Cabinet, Solid-Sided and Open-Sided Types*. For ARTCCs, selection shall be made only from 83 inches high modular cabinet racks which limits selection to Type III (22 inch deep cabinet), Type VI (25-1/2 inch deep cabinet), Type IX (22 inch deep, open sided cabinet), and Type XII (25-1/2 inch deep, open sided cabinet). Figure 6-1, *Solid-Sided Cabinet Rack - Type III*, is a drawing of one modular cabinet.

b. Cabinet Rack Installation. The following general guidelines should be followed when installing ARTCC standard modular cabinet racks, referred to in this handbook also as racks or equipment racks.

(1) Rack Alignment. Racks must be installed plumb, level, and square. Metal washers may be used as shims to compensate for floor irregularities, but neither washers nor rack shall be allowed to make an electrical connection to any steel in the floor.

(2) Bolting Adjoining Racks. Adjoining racks shall be aligned and leveled squarely and evenly with each other to permit being bolted together for greater stability. Adjoining racks should be bolted together with 1/4-inch bolts, flat washers, and lockwashers at four predrilled holes provided in the sides of each rack.

(3) Anchoring Racks. After proper alignment, leveling, and stabilizing, each rack should be anchored to the floor at each of its

FIGURE 6-1. SOLID-SIDED CABINET RACK - TYPE III

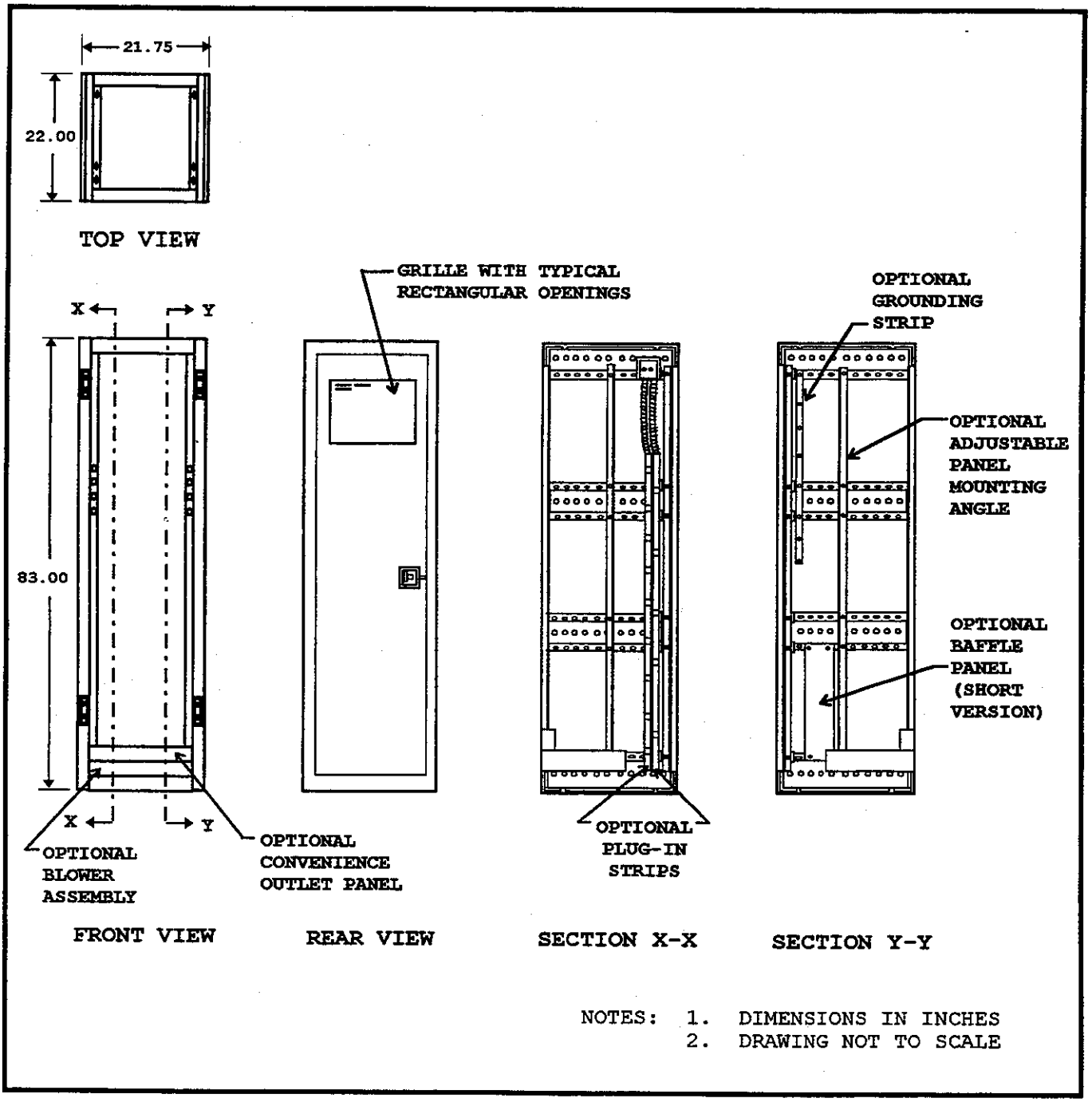

NOTES: 1. DIMENSIONS IN INCHES
2. DRAWING NOT TO SCALE

four mounting points using caulking anchors (or equivalent) and 1/4 inch bolts with flat washers and lockwashers.

CAUTION: To avoid high resistance ground connections, do not rely on anchor hardware to ground a rack to structural steel or to the metal grid in which raised floor panels reside. Each rack or cabinet shall be grounded individually by a conductor connected to the multipoint ground system or to an under floor SRG which is connected to the multipoint ground system.

173. CABLE TRAYS, LADDERS, AND DUCTS. Cable trays, ladders, and ducts provide mechanical support for distribution runs of signal and power cables. In equipment rooms, cable wireways can be under raised flooring or on the tops of, or elevated above, equipment cabinet rows. Cable ladders may be used only on top of cabinets that have closed metal tops which protect from EMI. Open top metal cable trays may be used for elevated runs between cabinet rows and entering or leaving the equipment room. For EMI protection, closed ferrous metal duct or conduit is required for each AC power or DC power cable run.

a. Open Cable Trays and Ladders. Use of open top trays for cable distribution allows flexibility and ease in installing, rearranging, and expanding cable runs. If sharing a tray, power cables shall be shielded completely from signal and control cables to protect against receiving or causing EMI. Figure 6-2, *Typical Cabinet Top Wireway Layout, Top View*, illustrates the use of cabinet top open cable trays and ladders for communication and control cable distribution and separate closed duct or conduit for AC and DC power wires. Refer to Airway Facilities Service drawing number DR-D-46014, *Communications Equipment Room Cabletray System-Isometric Pictorial*, for a perspective drawing of a room size integrated system of cabinet top open trays and ladders for cable distribution.

b. Metal Duct and Cable Tray Installation. The following guidelines shall be used in installing ferrous metal cable ducts, and trays.

(1) Continuous Metal Wireways. Commercially procured trays and ducts shall have no open holes or knockouts to damage cables or through which to pass EMI.

(2) Wireway Installation Hardware. Commercial trays and ducts shall be assembled and installed with manufacturer matching or recommended hardware.

FIGURE 6-2. TYPICAL CABINET TOP WIREWAY LAYOUT, TOP VIEW

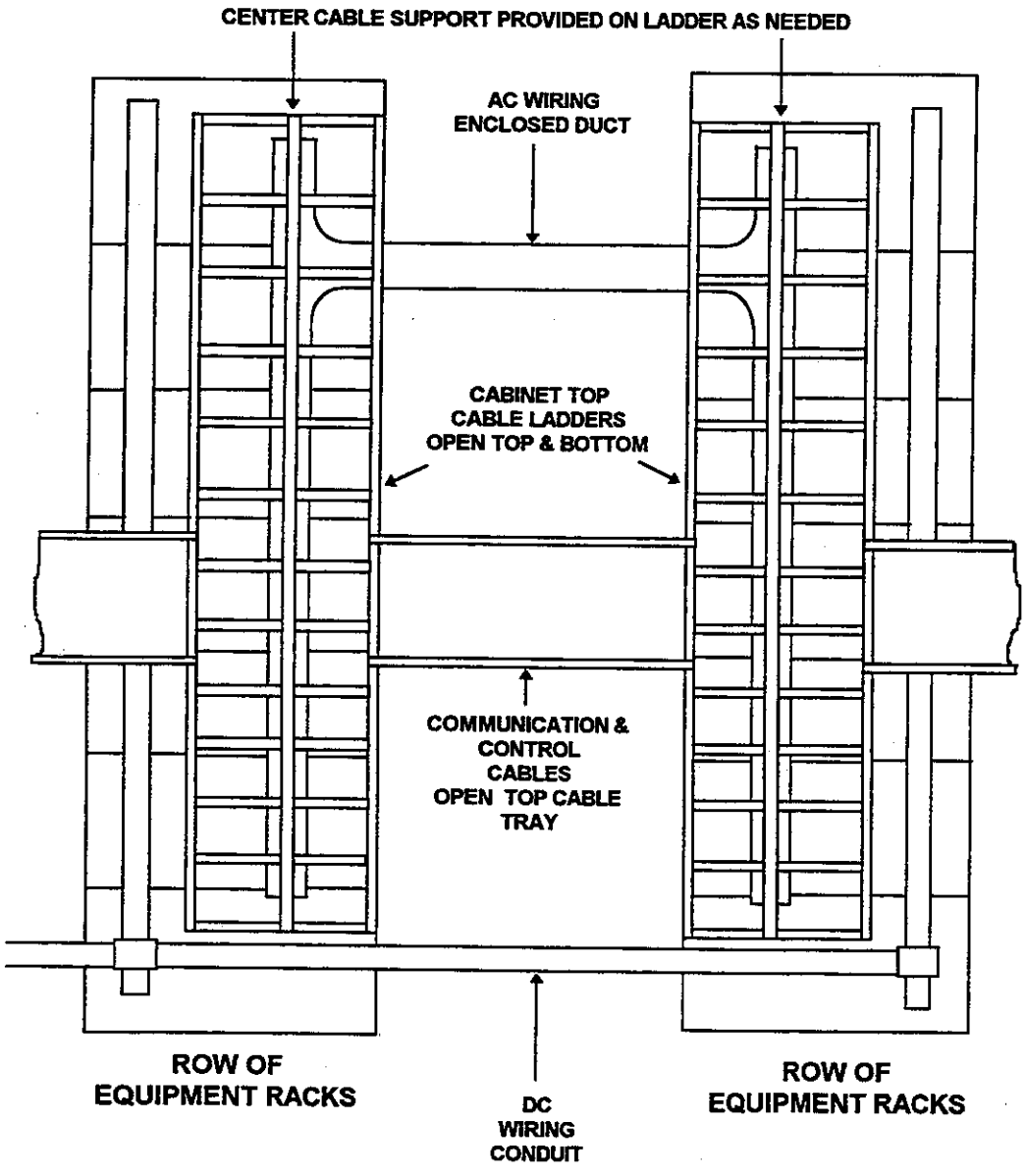

NOTE: Cabinet tops must be closed to protect from EMI when cables are distributed on cabinet top cable ladders.

(3) No Rough Metal Edges. Fabricated or modified trays or ducts shall have smooth edges which fit well and are in good alignment.

(4) Wireway Alignment. Surfaces of trays and ducts should be level, plumb, and square.

(5) Metal Tray and Duct Grounding. Each metal tray or duct shall be grounded inside along its entire length with a continuous copper ground wire, No. 6 AWG minimum size. The ground wire shall be attached to each section of the wireway. Section hardware couplings shall not replace the continuous ground wire. The ground wire shall be fastened to clean metal in each section using split-bolt connectors made of copper or bronze in ferrous metal cableways and of approved non-corrosive metal or bimetal in an aluminum tray or duct. The copper ground wire shall be insulated in aluminum trays or ducts. Each tray or duct ground wire shall terminate on the facility multipoint ground system (coded green with orange tracer).

(6) Wireway Isolation. Metal wireways, whether trays, ducts, or ladders, shall be insulated electrically from equipment racks, consoles, or other metal surfaces by using phenolic spacers and nylon attaching screws. This isolation of metals prevents ground loop paths which could distribute electrical noise.

(7) Wireway Hangers. Hangers used for suspended wireway installations shall be those provided or recommended by the wireway manufacturer. Installation shall conform with FAA-C-1217. Each metal hanger for a tray or duct shall be bonded securely to both the wireway and the structural metal to which it is attached. Both the wireway and the structural metal also shall be grounded separately to the ARTCC multipoint ground system. The resistance through each bond connection shall measure no more than 5 milliohms.

174. CONDUIT. Conduit shall be installed parallel with or at right angles to facility structural lines. If conduit must be cut, the cut end shall be square and shall be reamed to remove burrs and sharp edges. New threads cut on conduit shall be identical to factory cut threads in dimension and taper. Where conduit enters a box or cabinet which does not have a threaded hub, the conduit shall be installed with double locknuts and with a phenolic insulated metallic bushing on the inserted end.

a. Rigid Steel Conduit. Heavywall zinc coated rigid steel conduit requires threaded fittings of like material and may be installed in all locations. Rigid steel conduit shall conform to

Federal Specification WW-C-581. Installed on or below grade, rigid steel conduit requires protection specified in FAA-C-1217.

b. Intermediate Metal Conduit (IMC). Zinc coated steel IMC shall conform to UL Standard 1242 and shall bear a UL label. IMC shall not be used in hazardous locations. Fittings and conduit shall be of the same material. Only factory made sweep ells shall be used with IMC. Field bends in IMC shall not be permitted. Installed on or below grade, IMC requires protection specified in FAA-C-1217.

c. Rigid Aluminum Conduit. Rigid aluminum conduit shall not enclose control, signal, data, AC power, or DC power lines because it provides no protection from EMI.

d. Rigid Plastic Conduit. Heavywall PVC rigid plastic conduit shall be in conformance with Federal Specification W-C-1094, Type II. PVC conduit provides no protection from EMI and shall be installed only underground or embedded in concrete. PVC threaded fittings, lockwashers, and plastic bushings may be used in PVC conduit installations.

175. RAISED FLOORING. Raised flooring installations in equipment rooms require rack layout plans designed for a modular arrangement of racks, cabling, and traffic aisles and with consideration of facility equipment also. Racks must not be located on floor panels which provide access to under floor wiring. Raised floor panels are 24 inches square and rest on a modular grid of stringers attached to pedestal supports. A typical measurement vertically from an ARTCC concrete floor to the top of the raised floor panels is 18 inches.

a. Under Floor Air Plenum. In the space under the raised floor, at least the top 8 inches must be mostly empty, excluding structural columns, vertical cable runs, and floor pedestals. This 8 inch air layer is used as an air plenum. Air flow from air handlers is routed through the plenum and up through floor air vents for room and equipment ventilation and cooling.

b. Under Floor Wiring. All under floor wiring shall be routed in ferrous metal cable trays, duct, or conduit for EMI protection. Power wiring shall be run separately from signal and control wiring. Under floor wireways are installed most easily before installation of the raised floor. Access after installation of raised flooring, through removed floor panels, provides less freedom to install trays and ducts but allows rearrangement of under floor cables in installed wireways. Refer to Order 6650.9, *Requirements for Area Control Facility (ACF) Under Floor Cabling*, for more detail.

transient impedance of each ground rod and each conductor must be assessed so the safe limit for step voltage buildup is not exceeded. The system designer should refer to Order 6950.20 for more design references.

(2) Above Ground System. Conductors laid on top of a rocky surface must be shorter than if buried underground. With the limited ground surface contact of above ground conductors, step voltages can build up because inductance increases with conductor length and limits surge currents from quickly propagating the length of the conductor. A greater number of conductors of shorter length would satisfy the requirements of such an EES. Flat copper strap is better for above ground conductors if conditions permit its use.

d. Chemical Enhancement. Chemicals added to soil to improve the earth conductivity can effectively increase the capacity of the soil to dissipate electrical currents from lightning strikes. Adequate amounts of chemicals should be used to allow for the diluting effects of rainwater and melting snow which dissolve and disperse the chemicals. Chemicals may have to be applied every 2 to 3 years to maintain good soil conductivity. Refer to manufacturer instructions regarding application quantity for surface area coverage required. Chemical gels shall not be used for earth conductivity enhancement in surface grounding systems at ARTCC sites. The use of "coke breeze" as a backfill material has been shown to be an effective soil enhancement.

93. INSTALLATION. Planning in advance of installation is essential whether the project is the installation of a new EES or installation of an upgrade, repair, or addition to an existing EES.

a. Pre-installation Tasks. Before work begins, a schedule shall be established so that any site excavation can coincide with hole and trench digging necessary for EES installation.

b. CAUTIONS. Prior to any installation, heed the following cautions if applicable.

(1) Prior to starting any work on an existing EES, request the issuance of a NOTAM and coordinate all system shutdowns with air traffic personnel.

(2) To avoid personnel injury and possible equipment damage, turn off the AC power at the service entrance disconnect and, if possible, at the transformer.

(3) To avoid damage to existing buried cable, contact the appropriate personnel before digging holes and/or trenches.

(4) In areas where cable locations are uncertain, only hand digging tools shall be used to avoid damage to existing buried cable. No power digging equipment shall be used in these locations.

c. New Earth Electrode System (EES). Site conditions dictate the type of grounding system applicable and any special action to be taken to meet the required earth-to-electrode resistance for a specific ARTCC.

(1) Ground Rod Location. Ground rods shall be driven into undisturbed or compacted earth. If rods must be located in gravel drainage areas, the rods shall extend at least 8 feet into undisturbed earth beneath the drainage area. It is assumed that the drainage area is dug below the average ground level. In northern areas the ground rods shall be driven so that 10 feet of the rod assembly extends below the frost line. Normally the rods are driven into the earth with a driving rig. As shown in Figure 4-3, *Typical ARTCC Earth Electrode System (EES) Components*, a driving stud shall be used to protect the threaded end of the rod when it is being driven into the ground.

(2) Interconnecting Cable. Buried cable which interconnects ground rods shall be attached to the rods by exothermic welds required for cable connections covered with earth. FAA approved clamped connections are permissible in access wells, but only where the connections must be accessible for periodic maintenance inspections. A down conductor from an air terminal always requires an exothermic weld directly to a ground rod, even in an access well. An example of an EES for an ARTCC site is shown in Figure 4-4, *Typical ARTCC Earth Electrode System (EES)*. In sandy soil, use of solid copper strap instead of 500 MCM stranded copper cable can reduce inductance between ground rods. Exothermic welds shall not be used near hazards such as fuel tanks; therefore, in such areas, FAA approved clamp connectors are allowed to interconnect EES cables and rods. Electrical resistance through each interconnection, clamp or weld, shall be 1 milliohm or less measured with a 4-terminal milliohm meter.

(a) Trenches. For new installations, a trench for EES ground rods and interconnecting cables is dug around each building perimeter from two to six feet from the outside wall and outside the roof dripline. Trenches are dug also to connect ground rods to the ARTCC internal main ground plate/bus, to down conductors, and to building structural steel. The trenches are dug 2 feet deep minimum.

(1) Signal and Control Wiring. Under floor signal and control wiring shall be routed in cable trays. Cable insulation shall be plenum rated in areas classified as non-automated data processing (non-ADP) areas. NEC Article 300-22 applies to cabling in non-ADP areas, and NEC Article 645 applies to cabling in ADP areas.

(a) Cable Trays. Cable tray sections should be modular with accommodations for 45 degree corners, intersections, "T" sections, tray elevation changes, and connections to vertical risers. Standard width trays of 6, 12, or 18 inches are typical and should be centered under floor panels in aisles between racks or routed under unused floor space, not under equipment. Trays shall have no sharp edges or corners to damage cables. Figure 6-3, *Under Floor Cable Tray, Duct, and Conduit Installation,* shows required vertical and horizontal spacing under floor panels.

(b) Optical Fiber Cable. Optical fiber cable is routed in cable trays along with copper signal and control cables. In non-ADP areas, insulation on optical fiber cable must be plenum rated.

(2) AC Power wiring. AC power wires shall be enclosed in metallic conduit or duct to be shielded from receiving or causing EMI. Power cable runs shall not be closer that 24 inches to signal cables, except at crossovers or in some vertical runs. Power cable runs should cross signal cable runs at a 90 degree angle normally, but never less than at a 45 degree angle. AC power runs shall be the lowest vertical tier of cabling under the raised floor and shall be elevated above the concrete floor with standoffs to provide air circulation and inhibit moisture collection. Standoffs 1 inch high or higher may be used depending upon the amount of moisture or estimated flooding protection required and the vertical space available.

(3) Fire Detection Wiring. Fire detection and other facility control circuits are routed under raised flooring in electrical conduit also. This includes wiring for fire detection heads on flooring pedestals, for alarms, and for halon dispersion fire extinguishing equipment.

176. 'D' CHANNEL. D channel is a general term for plastic duct used as a raceway for distribution of audio coax cable, twisted pairs, or wires for which ferrous metal protection from EMI is not required. Plastic duct raceways have snap on covers, and other ducts have holes or slots in the sides through which wires are distributed as needed.

177.-185. RESERVED.

FIGURE 6-3. UNDER FLOOR CABLE TRAY, DUCT, AND CONDUIT INSTALLATION

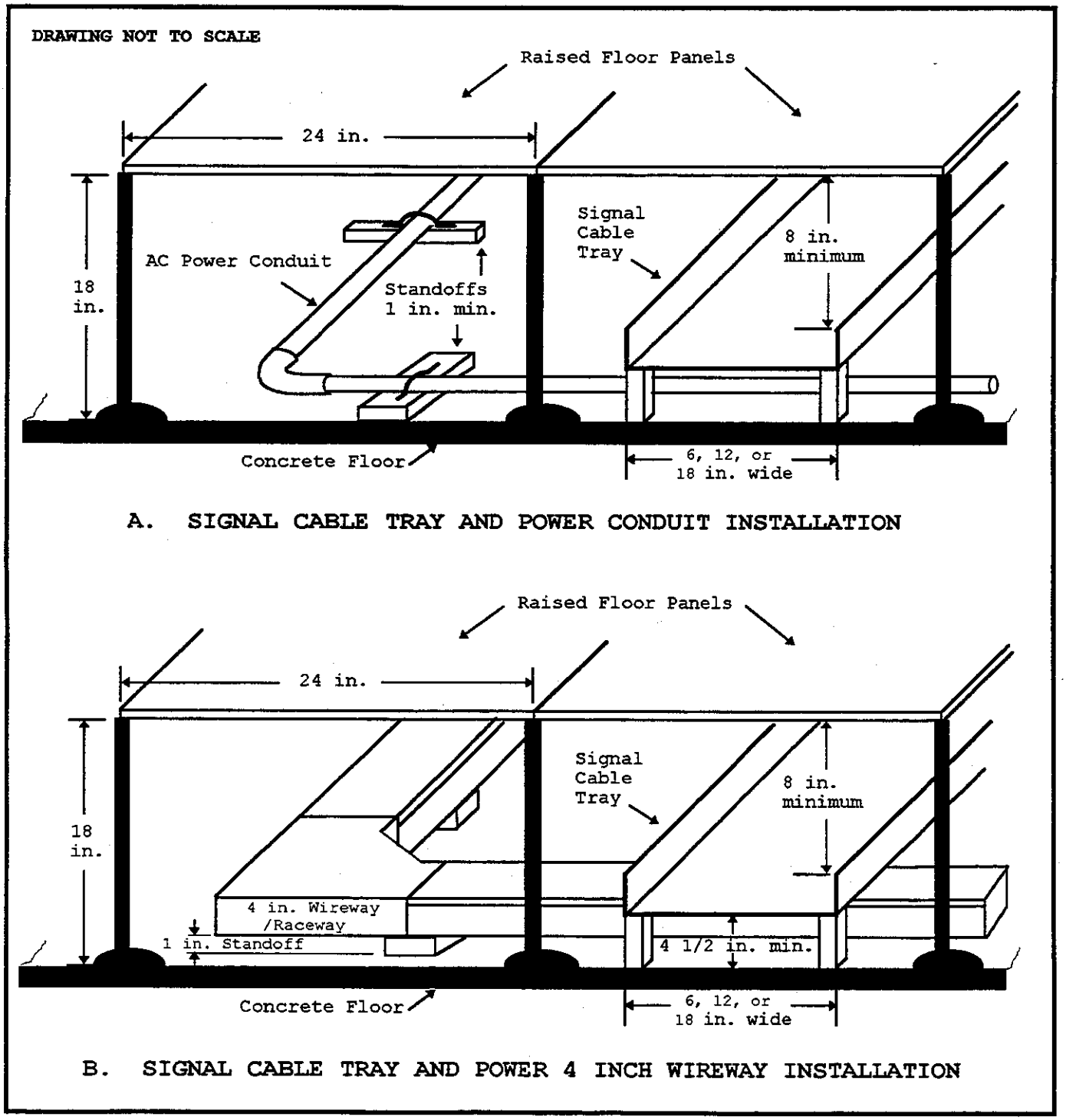

SECTION 2. INSTALLATION OF EQUIPMENT

186. EQUIPMENT RACK CONFIGURATION. Equipment racks and consoles are allocated locations in an ARTCC according to their specific functions and the operating systems supported by the equipment. Figure 6-4, *Typical Equipment Locations* indicates general locations of some communication equipment in an ARTCC and of some supporting A/G radio equipment in RCAG and BUEC sites.

a. ARTCC Operations Room. Console equipment from which AT controllers direct aircraft traffic in the ARTCC airspace sectors is located in the operations room. Each sector console position has the capability of and responsibility for voice communications with and some data for all air traffic in one assigned sector airspace. The latest revisions of both FAA Handbook 7110.9 and FAA Order 7210.3K, *Facility Operation and Administration*, provide information on controller functions and minimum space requirements in an ARTCC.

(1) Sector ATC Consoles. The physical arrangement of ATC consoles should promote logical work flow and facilitate aircraft handoff between controllers. Basic controller operating equipment includes radio channel control and communication equipment, interphone, radar displays, automation equipment, and flight progress boards. The ATC console and all equipment supporting one sector should be powered from a source or AC voltage phase different from its adjacent sectors to avoid common outages in adjacent airspaces.

(2) Plan for Change. Continuous growth in the volume of air traffic must be considered in all future plans for ATC operations. Necessary changes can be anticipated by the ongoing evaluation of all programs and equipment to satisfy future needs. Changing requirements will be accommodated by modernization or expansion. New digital systems, use of developing technology, and improved equipment design all can continue to add increased capability to existing ATC programs and will provide greater possibilities for future plans.

b. ARTCC Equipment Room. In ARTCC equipment rooms, modular communication equipment racks are located side by side in rows and are grouped further according to function. Racks requiring more frequent attention should be located at the front of the room for easy access. Racks requiring less attention, such as resectoring patch panels, can be located toward the rear of the room. Similar and interrelated units should be grouped together and arranged physically to follow signal flow and to minimize cabling length. Uniformity in rack equipment arrangements simplifies signal tracing and maintenance. But

FIGURE 6-4. TYPICAL EQUIPMENT LOCATIONS

ARTCC

OPERATIONS ROOM

VSCS Console Equipment (VCE)
- VSCS Electronic Module (VEM)
- VSCS Display Modules (VDM)
- VSCS Indirect Access Keypad (VIK)

EQUIPMENT ROOM

Jack Panels
Voice Recorders (HCVR or DVRS)
Local Emergency Transmitters & Receivers (VHF & UHF)
Power Supplies (23/46 VAC)
Main Distribution Frames
Antenna Cables
VSCS Switching System
- G/G Switch Control
- A/G Switch Control

Radio Control Equipment (RCE)
BUEC System (with VSCS)
- Radio Control Equipment (RCE)
- Power Supply Panel
- Local BUEC Transmitters and Receivers (VHF & UHF)

REMOTE SITES

RCAG

Antennas
Transmit Coaxial Relay & RF Body Panels
Receive Coaxial Relay Panels
VHF & UHF Transmitters
VHF & UHF Receivers
VHF & UHF Linear Power Amplifiers (LPA)
Antenna Patch Panel
Jack Panels
Main Distribution Frames
Telco Signaling System (SS-1)
Power Supplies
Radio Control Equipment

BUEC

Antennas
VHF & UHF Transceivers
VHF & UHF Transmitters
VHF & UHF Receivers
VHF & UHF Linear Power Amplifiers (LPA)
Radio Control Equipment
Power Supplies

for EMI compatibility, sources of possible EMI emissions and shielding of signal and power cables must be considered in locating equipment.

(1) Rack Spacing. A minimum service clearance of 3 feet should be provided at the rear and 5 feet in front of all racks for access to the equipment. When parallel rows of racks are installed facing each other, the front and rear clearance requirements can be common between rows. Four feet should be allowed at each end of a row for maintenance purposes, walkways, and air circulation. The maximum number of adjacent racks in a row should not exceed 15 without a break in the row. When a row is broken into sections, each section should contain 10 or less racks. An aisle at least 3 feet wide must be inserted in each break in a row. For safety, the floor plan for an equipment room shall provide for unobstructed routes to its exits.

(2) Lighting. Fluorescent lamps with radio suppressor ballasts should be used in electronic equipment areas. The minimum light provided should be 30 foot-candles measured at a height of 26 inches above the floor.

(3) Parts Storage and Maintenance Areas. Space allocated for spare parts storage and maintenance areas is determined by the types of equipment and level of maintenance to be performed. Space required for administrative functions is determined from the number of personnel programmed for normal operation and maintenance duty at the ARTCC. Space requirements must comply with FAA Order 4660.1, *Real Property Handbook*. Suggested area sizes below are for planning only.

(a) Storage area - 120 square feet
(b) Maintenance area - 150 square feet
(c) Administrative area - 60 square feet (including space for a desk, a file cabinet, and a bookcase)

(4) Expansion. To allow for future expansion without severe impact on space allocation requirements, initial planning should include a growth factor of 25 percent.

187. EQUIPMENT INSTALLATION. Thorough initial system planning is essential to minimize costs and to avoid later building modification and/or rearrangement of equipment. Important considerations for planning include configuration management (CM) for the facility, the number of racks required, and the arrangement of equipment units in the racks. Rack layout drawings provide useful information for preparation of station plans and for installation and maintenance procedures and drawings. Included below are references for facility

CM and guidelines for the arrangement of equipment units and panels in equipment racks.

a. Facility Configuration Management (CM). The following references pertain to CM for the facility.

- NAS-MD-001, NAS Configuration Management Document, Subsystem Baseline Configuration, and Documentation Listing
- FAA Order 1800.8, NAS Configuration Management
- FAA Order 1800.57, NAS Configuration Control Board
- FAA Order 6032.1, Modifications to Ground Facilities, Systems, and Equipment
- FAA Order 6470.33, Control of Space at ARTCCs

b. Equipment Layout. In general, similar equipment or related panels should be grouped in racks according to type and function. Types of equipment include VSCS interfaces, ATC voice recording equipment, primary ATC channel RCE equipment, BUEC equipment, etc.

c. Related Equipment. Uniform arrangement of equipment in duplicate or related racks simplifies signal tracing procedures.

d. Equipment Accessibility. More frequently adjusted equipment such as jack panels should be placed at a convenient height for easy accessibility.

e. Unused Rack Space. Unused rack spaces should be filled with blank panels until the space is needed.

f. Power Supply Location. Heavy power supplies should be located at or near the bottom of racks.

188.-195. RESERVED.

SECTION 3. EQUIPMENT RACK WIRING AND CABLE INSTALLATION

196. RACK TERMINAL BLOCKS. All DC power, signal, or control wires entering or leaving a rack or connected directly to rack mounted equipment shall be connected through rack mounted terminal blocks. Terminal blocks are provided in each rack as a means from which to easily disconnect wires as needed for replacement of rack mounted equipment or for rack relocation.

a. Terminal Block Mounting. In equipment racks, terminal blocks shall be installed on rack baffle panels. Terminal blocks on a baffle panel provide a central location for rack wiring connections and can serve as a distribution frame for inter-rack signal and control wiring. Blocks should be arranged uniformly on the panel and mounted so that DC power terminal blocks and wiring are EMI protected from signal and control terminal blocks and wiring.

b. Terminal Block Wiring. DC power, signal, and control cables and wires, including pairs from multiconductor cables, shall be distributed through terminal blocks.

(1) Wiring Terminations. For each terminating cable or wire pair and accompanying shield, the outer plastic covering and wrapping should be removed for no more than 4 inches from the termination. Insulation stripping devices which may nick, mar, or damage the conductors in any way shall not be used. Wires connected to terminal blocks shall be fanned out neatly and uniformly. Each terminating wire shall have a minimum of 1-1/2 inches of slack to facilitate inspection, wire removal, or replacement of a damaged connector.

(2) Securing Cables. Loose cables shall be bundled and secured to a distribution frame with cable tie wraps. Unbundled signal and control cables should be formed into a cable harness. Each harness formed should have no visible crossover of wires or right-angle breakouts.

197. RACK POWER WIRING INSTALLATION. Power wiring, AC or DC, is routed to racks separately in ferrous metal conduit or duct to protect against causing or receiving EMI. AC wires shall maintain isolation from DC wiring both outside and inside the rack.

a. AC Power Installation. AC power wires (AC voltage, neutral, and AC protection ground) shall enter a rack from conduit or duct which is continuous to a metal junction box in the rack. From the junction box, distribution is made by BX or other EMI protected cable to one or more power strips mounted near a rear corner inside the

rack. Power strips contain AC outlets for plugging in rack installed equipment or test equipment. Also using BX or EMI protected cable from the rack junction box, AC convenience outlets may be installed on a front panel near the bottom of the rack if required.

NOTE: Do not install AC convenience outlets in racks containing only DC powered equipment except on a temporary basis.

b. DC Power Installation. DC power wires shall enter a rack from conduit or by shielded pair from terminal blocks on a distribution frame on an adjacent rack baffle panel. Distribution of DC voltage and return wire pairs to rack mounted equipment is made only from terminal blocks on the baffle panel inside the rack.

198. AUDIO AND CONTROL CABLE INSTALLATION. Audio signal and control cables shall be distributed from terminal blocks. Signal and control wiring entering or exiting an equipment rack shall be connected through terminal blocks on a distribution frame before interconnecting to adjacent racks. This interconnect arrangement provides access for testing and flexibility for replacing equipment or changing circuits.

a. Rack Baffle Plate. Each signal or control wire connected to rack mounted equipment shall come directly from a terminal block on a baffle plate in the same rack. Distribution of a signal to any other installed equipment, either in the rack or external to the rack, shall be through terminal blocks on the rack baffle plate.

b. Wire Pair Shield. The shield on a signal or control wire pair must conduct away EMI to provide a consistent ground reference for both wires. To accomplish this, the shield shall be electrically isolated from the multipoint ground system and then shall be connected from one point only, preferably the signal source end, to a single point ground system bus (or lug). Connection from only one point on each isolated shield section prevents creation of ground loops, which distribute EMI and noise. Be sure that purposely unterminated ends of wire pair shields remain unterminated so the ground reference is not corrupted by connection to the multipoint ground system.

(1) Shield Discontinuity. When a wire pair and shield are cut, in order to continue through terminal blocks or other connectors, the new separate section of shield must be treated as a separate shield. Each discontinuous section of shield shall be isolated from all ground systems and then shall be grounded, from one point only, directly to a single point ground system bus.

(2) Analog and Digital Systems. A separate analog or digital single point ground system shall be installed for an analog or digital equipment area to provide a consistent ground reference for a specific area. Each single point ground bus or lug shall be isolated from other ground systems and shall be cabled direct to its analog (digital) single point ground plate or bus to reach the main single point ground plate. Single point ground conductors are coded green with yellow tracers and may be coded as analog or digital if needed.

c. Cable Junctions. Cable connections should be made only at terminal strips or in junction boxes. Insulation stripping devices which may nick, mar, or damage the conductors in any way shall not be used. All cables shall be labeled or tagged on both ends at each junction. All markings should be in accessible and visible locations for easy identification.

199. RF COAXIAL CABLE INSTALLATION. Although ATC antennas normally are located at remote communication sites, each ARTCC has on site antennas which require coaxial cables for RF transmission lines. The type of RF coaxial cable to be installed depends upon the frequencies to be accommodated, run length, usage location, environmental temperature and/or pressure, amount of signal attenuation that can be tolerated in the RF transmission line, and acceptable cost of cable.

a. RF Transmission Line Type. Depending upon the application, RG type coaxial cables with solid dielectric or lower attenuation foam dielectric and RF HELIAX type coaxial cables with foam or air dielectric are used by the FAA for 50 ohm RF transmission lines. The extra cost of an RF coaxial cable with foam or air dielectric may be recovered by the reduced loss of signal in the cable. Less cable loss can allow normal transmitter operation at a lower output wattage or may eliminate the need for a linear power amplifier (LPA) to compensate for excess cable loss.

(1) Solid Dielectric Cable. Solid polyethylene dielectric encases a stranded copper conductor in RG-214/U and a solid copper conductor in RG-218/U coaxial cables. The smaller diameter RG-214/U is used inside a building for short runs between RF equipment and an antenna patch panel and also outside on antenna towers for short runs between a tower mounted coaxial cable junction box and its antennas. RG-218/U has been used for longer external runs between an antenna patch panel and a tower mounted coaxial cable junction box.

(2) Foam Dielectric Cable. Foam dielectric consists of polyethylene expanded with bubbles to produce a lower dielectric constant around the conductor. This results in less attenuation of

the signal in the cable. Inside the outer cover on RG-331/U and larger diameter RG-333/U, the foam dielectric is encased in an aluminum shield for greater EMI protection. In HELIAX cable with foam dielectric, the foam is encased in a corrugated copper shield that is protected by the cable outer cover. Foam dielectric cables are more expensive than solid dielectric cables.

(3) HELIAX Cable. A HELIAX type RF cable may have continuous foam dielectric or, for special cases, may have air dielectric with a helical shaped strip spacer or a finned polyethylene tube around the center conductor. A corrugated flexible metal outer conductor is encased by an outer jacket. Cable with air dielectric may allow pressurization of the air space if required by usage or environment. The 50 ohm foam dielectric HELIAX RF cables listed below are some that have been used in FAA installations.

Diameter	Andrew Corp. Part Number (or Cablewave Equivalent)
1/4"	FSJ1-50A
3/8"	LDF2-50
1/2"	LDF4-50
7/8"	LDF5-50A

b. RF Coaxial Cable Selection. In general, RG-214/U should be used for indoor runs and RG-331/U, RG-333/U, and HELIAX for outdoor runs, unless special conditions require other usage. To aid RF transmission line cable selection, attenuation in coaxial cable with solid or foam dielectric is listed in Figure 6-5, Typical *Attenuation vs Frequency for RF Coaxial Cable*. Figure 6-6, *Attenuation Correction Factor for Temperature in RG Type Coaxial Cable with Foam Dielectric*, is included to aid in selection of RG type coaxial cable for special temperature conditions.

c. RF Cable Junctions. RF cable junctions provide the means from which to physically reroute cables, to switch RF traffic paths, to transition to a different type of coaxial cable, and to install transient suppressors on each cable upon entrance to a building.

(1) Antenna Patch Panel. An antenna patch panel shall be mounted on an inside wall where RF transmission lines from one or more antennas enter the building. The patch panel shall have transient suppressors installed first in each incoming line to protect facility communications equipment. Connections after the suppressors serve as junctions to transition to a different type of RF coaxial cable for inside cabling. These connections provide the capability for manually patching radio equipment to different antenna systems and patching in

FIGURE 6-5. TYPICAL ATTENUATION VS FREQUENCY FOR RF COAXIAL CABLE

Frequency (MHz)	RG Cable & Dielectric	Attenuation dB/100 Feet	HELIAX Cable & Dielectric	Attenuation dB/100 Feet
118.2	RG-214/U SOLID	2.4	FSJ1-50A FOAM	1.96
	RG-218/U SOLID	1.05	LDF2-50 FOAM	1.14
	RG-331/U FOAM	0.88	LDF4-50A FOAM	.744
	RG-333/U FOAM	0.57	LDF5-50A FOAM	.39
134.9	RG-214/U SOLID	2.6	FSJ1-50A FOAM	2.1
	RG-218/U SOLID	1.15	LDF2-50 FOAM	1.22
	RG-331/U FOAM	0.91	LDF4-50A FOAM	.797
	RG-333/U FOAM	0.61	LDF5-50A FOAM	.43
150.2	RG-214/U SOLID	2.7	FSJ1-50A FOAM	2.23
	RG-218/U SOLID	1.23	LDF2-50 FOAM	1.3
	RG-331/U FOAM	1.00	LDF4-50A FOAM	.846
	RG-333/U FOAM	0.65	LDF5-50A FOAM	.453
225.0	RG-214/U SOLID	3.45	FSJ1-50A FOAM	2.74
	RG-218/U SOLID	1.63	LDF2-50 FOAM	1.6
	RG-331/U FOAM	1.25	LDF4-50A FOAM	1.042
	RG-333/U FOAM	0.79	LDF5-50A FOAM	.56
300.0	RG-214/U SOLID	4.1	FSJ1-50A FOAM	3.19
	RG-218/U SOLID	1.95	LDF2-50 FOAM	1.86
	RG-331/U FOAM	1.47	LDF4-50A FOAM	1.22
	RG-333/U FOAM	0.96	LDF5-50A FOAM	.654
399.9	RG-214/U SOLID	4.9	FSJ1-50A FOAM	3.7
	RG-218/U SOLID	2.4	LDF2-50 FOAM	2.16
	RG-331/U FOAM	1.7	LDF4-50A FOAM	1.42
	RG-333/U FOAM	1.06	LDF5-50A FOAM	.763

FIGURE 6-6. ATTENUATION CORRECTION FACTOR FOR TEMPERATURE IN RG TYPE COAXIAL CABLE WITH FOAM DIELECTRIC

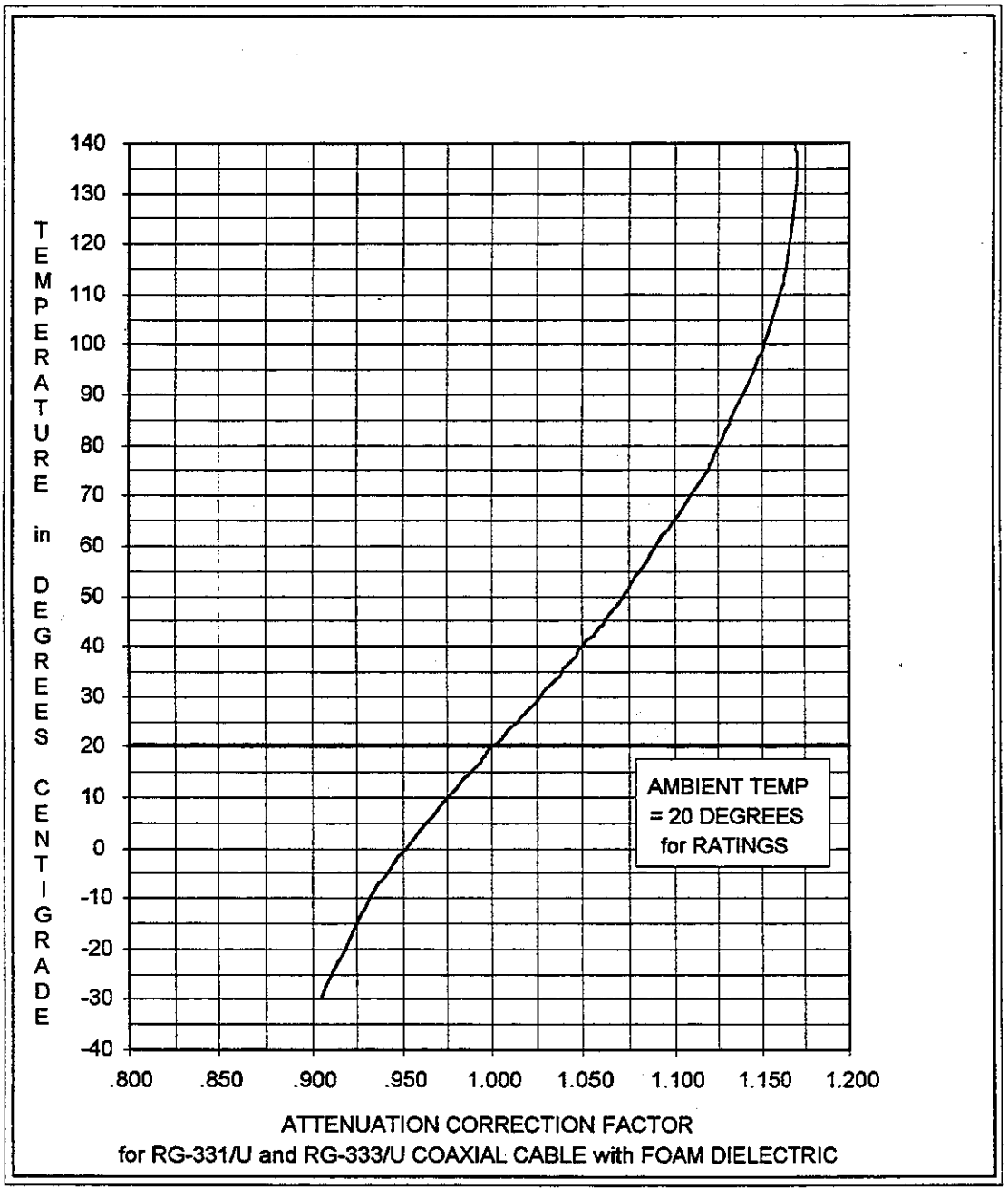

an installed spare cable ready for use if a cable fails. Figure 6-7, *Wall Mounted Antenna Patch Panel*, shows cabling in a patch panel.

(2) Coaxial Relay and RF Body Panel. This unit is used to transfer the antenna between main and standby transmit equipment. The panel mounts in a standard 19 inch rack cabinet and consists of a coaxial relay and RF body and has an indicator lamp. In an ARTCC this unit is used for transmitters on site. Details for a recommended transmit coaxial relay and RF body for en route applications are found on FAA Drawing D-46018, *Transmit Coaxial Relay and RF Body Panel*.

(3) Receive Coaxial Relay Panel. This relay unit is used to transfer the antenna connection between main and standby receive equipment. The panel mounts in a standard 19 inch rack cabinet, consists of a coaxial relay, and has an indicator lamp. In an ARTCC this relay is used for local A/G receivers operating on site. Details for a recommended receive coaxial relay for en route applications are found on FAA Drawing D-46019, *Receive Coaxial Relay Panel*.

(4) Antenna Coaxial Cable Junction Box. An antenna coaxial cable junction box is a waterproof metal box which is installed on the railing of an antenna tower or pole platform. It provides a junction for transition to a different type of cable, usually a smaller diameter more flexible cable, to go from the box to the antenna. It also contains a terminated spare cable from the antenna patch panel for use if needed. Details of a typical antenna coaxial cable junction box installation are found in Chapter 6 of FAA Order 6580.3A, *Remote Communications Facilities Installation Standards Handbook*.

200.-208. RESERVED.

FIGURE 6-7. WALL MOUNTED ANTENNA PATCH PANEL

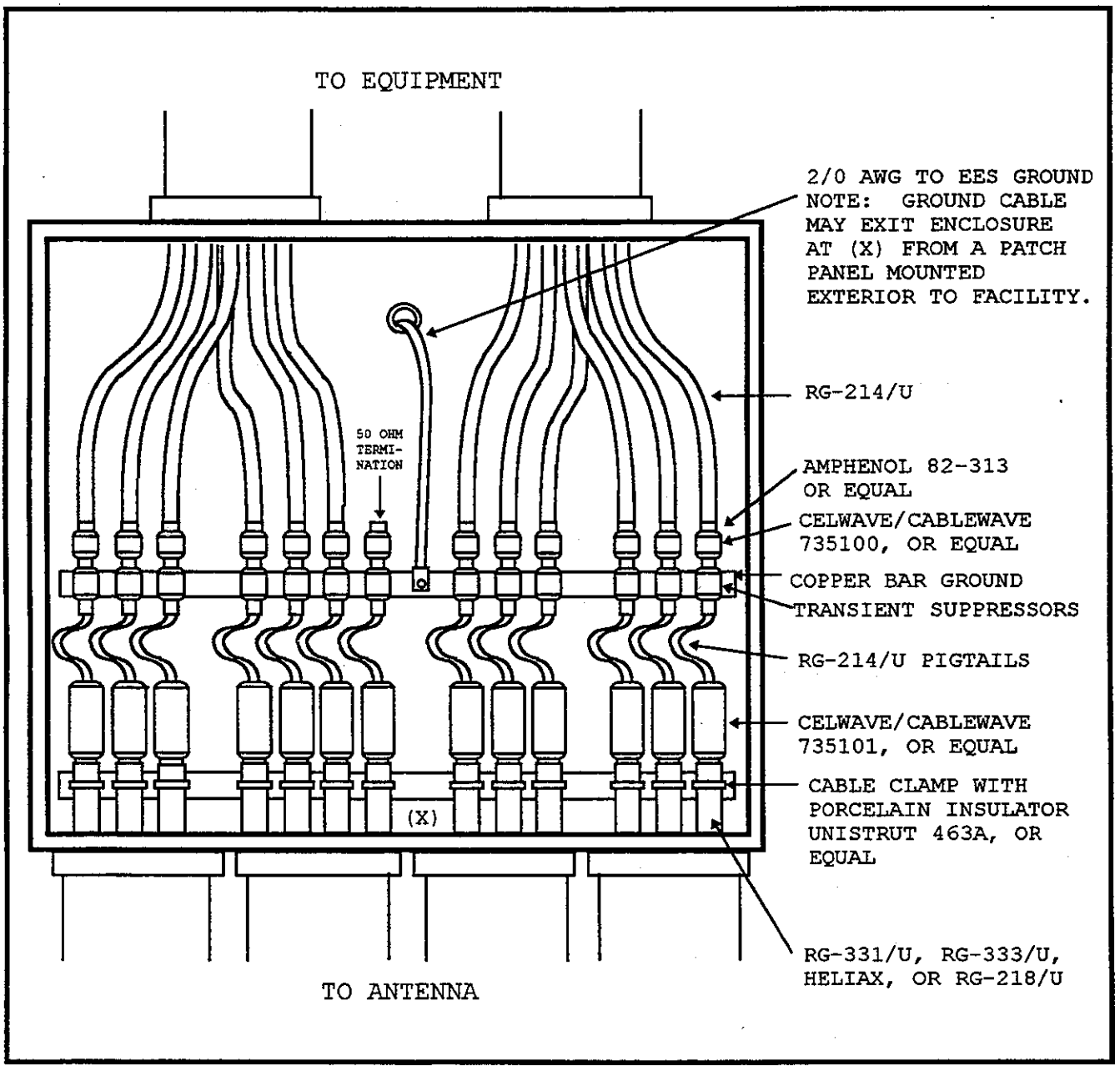

SECTION 4. VOICE SWITCHING AND CONTROL SYSTEM (VSCS)

209. GENERAL. The VSCS provides for selection, interconnection, activation, and reconfiguration of communication paths between ATC positions and local A/G radios, remote A/G radios, and other operating ATC positions. The VSCS interfaces with analog voice circuits and digital control signals and processes the information digitally. Modular elements in a VSCS system facilitate system expansion to support a maximum of 430 controller positions, 350 A/G frequencies, 240 BUEC frequencies, 570 G/G trunks, and 40 private automatic branch exchange (PABX) circuits for an ARTCC. An ARTCC VSCS system is shown in Figure 6-8, *VSCS Functional Block Diagram.*

a. A/G Communications. The VSCS provides switching of A/G communication paths to support selection and control of transmitters, receivers, and transceivers located at local, remote, or BUEC radio sites. A separate hot backup A/G switch assumes all A/G switching functions automatically upon failure of the primary switch. Manual switching between primary and backup A/G switches is possible from authorized "classmarked" controller or supervisory positions or, without a software-controlled classmark or password, from a discrete monitor and control (DMC) console.

b. G/G Communications. The VSCS provides intercom (IC) connectivity between any positions within an ARTCC and interphone (IP) capability at each ATC position to allow phone calls between ATC positions at other ATC facilities. The VSCS also interfaces with the PABX for controller access to external networks, including the Federal Telecommunications System (FTS) and the Public Switched Telephone Network (PSTN).

c. Reconfiguration. The A/G and G/G circuits at each controller position can be reconfigured by authorized "classmarked" personnel in accord with predetermined configuration maps. Reconfiguration may include direct access assignments and indications, radio frequency assignments, and classmarks. One configuration, called split mode, separates a position's G/G voice from the A/G voice communications in order to allow G/G voice to be covered by another controller. Reconfiguration commands are executed at position, sector, area, or facility level and do not interfere with calls in progress.

d. Bus Local Area Network (BusLAN). The BusLAN consists of redundant bus connections between the A/G and G/G switches, the VCE, and where one is provided, the contractor traffic simulation unit (CTSU). The VSCS BusLAN thicknet coaxial cable system meets the Institute of Electrical and Electronic Engineers (IEEE) 802.3

FIGURE 6-8. VSCS FUNCTIONAL BLOCK DIAGRAM

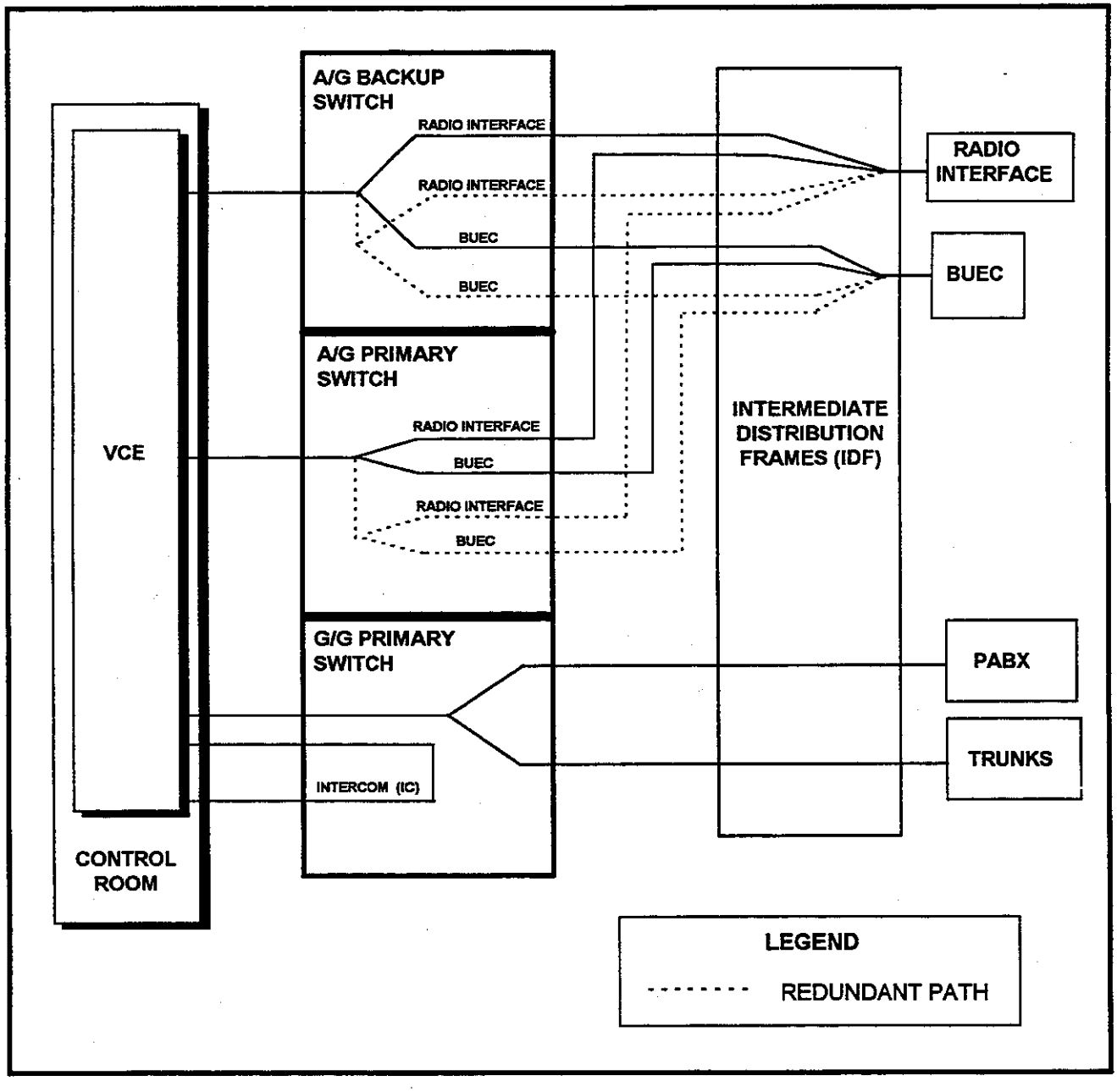

standard. The maximum length of a BusLAN cable run, usually from a BusLAN transceiver to its VSCS electronics module (VEM), shall not exceed 50 meters.

210. EQUIPMENT CONFIGURATION. An ARTCC VSCS operating system contains five subsystems: the VSCS console equipment (VCE) subsystem, the switching subsystem, a maintenance position equipment subsystem (MPES), a control subsystem, and the system interconnect subsystem (SIS). Two separate auxiliary VSCS subsystems include a stand-alone VCE trainer (VCET) provided at each ARTCC and one CTSU located at the FAA WJHTC. A block diagram of VSCS subsystems is shown in Figure 6-9, *VSCS Subsystem Block Diagram*.

a. VCE Subsystem. The VCE subsystem is the VSCS human interface through which AT controllers access and control the A/G and G/G communications functions. The VCE consists of the VEM, the Interactive Display Subsystem or VSCS display modules (VDM), the communications group, the VSCS indirect access keypad (VIK), and the supervisory recorders. Elements of the communications group for the maintenance console, ancillary positions, and supervisory positions are determined at the site activation survey (SAS). Table 6-1, *VSCS/AAS Equipment*, lists VSCS subsystem equipment that can support an existing VCE console which has an M-1 communications group and also lists equipment that will support the future AAS console which will have new radar display system replacement (DSR) equipment.

b. Switching Subsystem. The switching subsystem includes a primary A/G switch, a backup A/G switch, a G/G switch, the DMC, and timing equipment. Connectivity through old BUEC priority modules is required for old BUEC transceiver channels rather than through RCE that is required for separate A/G transmitters and receivers in primary M/S and backup Sustaining-BUEC (S-BUEC) channels. A VSCS requires connectivity to external telephone trunks, the RCL, and an external PABX.

c. Maintenance Position Equipment Subsystem (MPES). The MPES consists of a maintenance position console assembly, operator workstations, a built-in automated voice channel test equipment rack, desktop and Chatterlog printers, the combined distribution frame (CDF) patch panels, and a tandem operations console. The maintenance position console assembly includes a VEM, VDM, VIK, and communications group. AF uses the maintenance position equipment (MPE) to monitor and perform maintenance operations on the VSCS system.

d. Control Subsystem. The control subsystem supports the VSCS management and maintenance functions and consists of the VSCS central

FIGURE 6-9. VSCS SUBSYSTEM BLOCK DIAGRAM

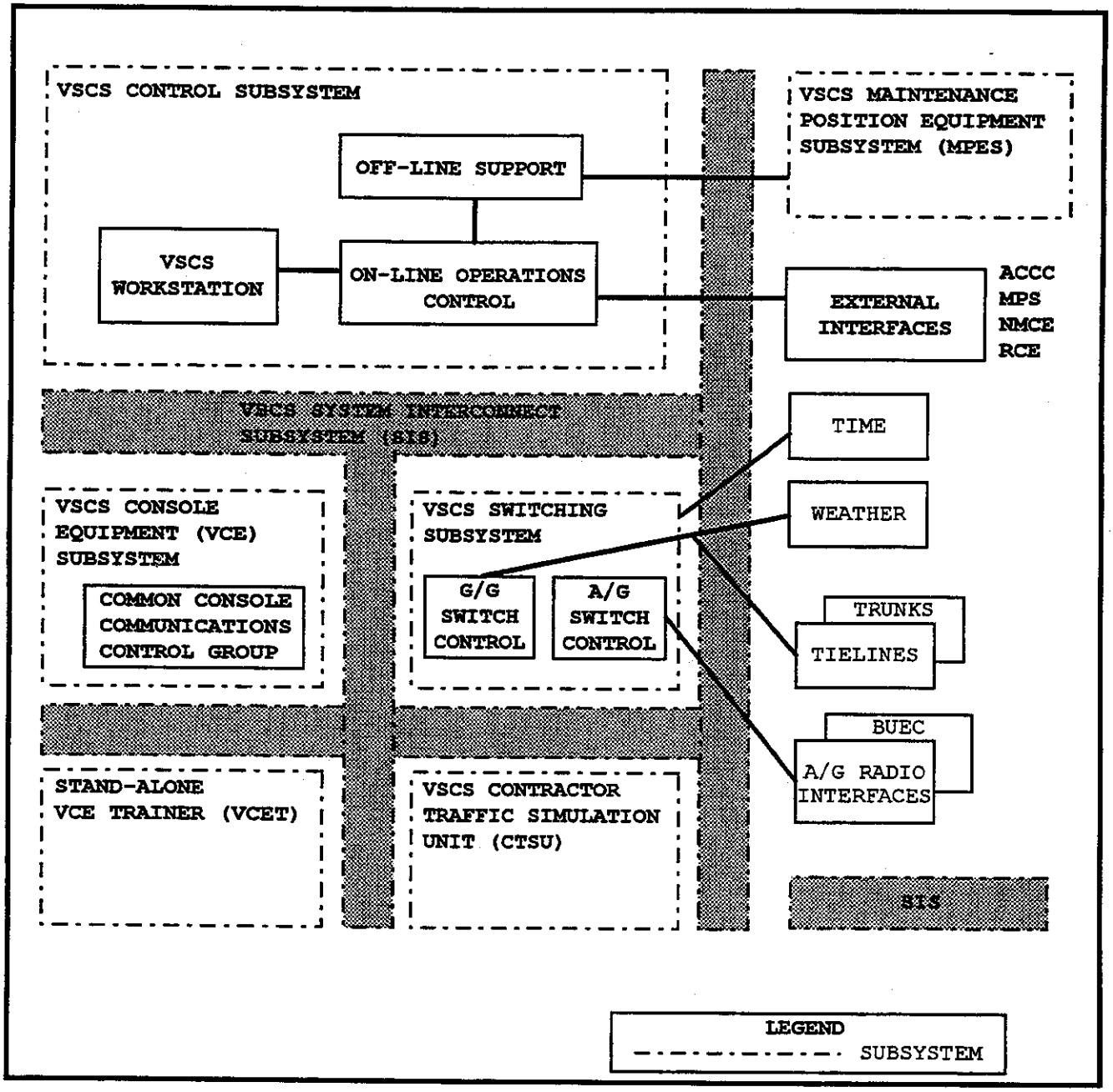

TABLE 6-1. VSCS/AAS EQUIPMENT

SUBSYSTEM/EQUIPMENT ITEM	ITEM QUANTITY
AAS Common Console (C/C)	
VSCS Console Equipment - (VCEA = AAS Supplied)	
Communications Group:	
Headset/Handset & Dual Jack Modules (DJM)	2
A/G Loudspeaker Module & Controls (A/G LS)	1
G/G Loudspeaker Module & Controls (G/G LS)	1
Foot Switch (FS)	1
Cables - VCEV (VEM) to VCEA Modules	5
Cables - VCEV (VEM) to VCEV Modules	7
Cables - VCEV (VEM) to AC Power	2
VSCS Console Equipment - (VCEV = VSCS Supplied)	
VEM	1
VDM	2
VIK	1
Communications Group (M-1 Time Frame):	
DJM	2
A/G LS	1
G/G LS	1
FS (ordered separately)	1
Headset/Handset	
Supervisory Group: Voice Recorders (VCEV)	2 - 6
Power (Main and Standby)	

processor, mass storage, VSCS workstation, high-speed printer, and internal and external interfaces (I/F). The DMC unit, located in the test equipment rack in the switching subsystem, is a subfunction of the control subsystem and operates independently.

(1) Data Entry Operator (DEO) Positions. The VSCS control subsystem supports DEO functions from designated workstations in each ARTCC. DEO functions create, modify, and validate the site VSCS configuration data base. Separate workstations are provided for AT and AF functions.

(2) AT DEO Position. The AT DEO position functions may provide coordination of site adaptation data for logical resources, configuration map functional control, utilities coordination, and reports coordination, all in conjunction with the AF DEO position functions.

(3) AF DEO Position. The AF DEO position functions may provide site adaptation data for hardware configuration and physical resources, utilities coordination, and reports coordination, all in conjunction with the AT DEO position functions.

e. System Interconnect Subsystem (SIS). The VSCS SIS includes all power and signal cables that interconnect the VCE, switches, subsystems, workstations, racks, timing equipment, BusLAN transceivers, the IDF/CDF groups including patch panels, and power conditioners for the VSCS system. The SIS consists of interconnect cables only.

f. Contractor Traffic Simulation Unit (CTSU). Only one CTSU is provided and is located at the WJHTC. The CTSU is used to evaluate performance of the VSCS under simulated peak traffic loads. The unit simulates traffic loading on the A/G and G/G switches and also simulates interfaces to the ACCC, MPS, NMCE, and RCE, but may require modification to simulate traffic using digital interfaces to a digital voice and data time division multiple access (TDMA) radio system.

g. VCE Trainer (VCET). A VCET is provided at each ARTCC as a stand-alone system, not interconnected with the VSCS. The VCET is used for training personnel on the VSCS.

211. MATERIALS AND EQUIPMENT. VSCS communications are routed through distribution frames to interface with the equipment supported. At initial installation in an ARTCC, a VSCS transition switch is provided to allow cutover from an older voice control system to the VSCS.

After transition to a VSCS, removal of the transition switch provides expansion capability for the VSCS to accommodate more controller positions and circuits. A transition switch and three required interconnection frame groups, designated the VSCS IDF, radio interface (RI) IDF, and VSCS distribution frame (VDF), are shown in Figure 6-10, *VSCS Distribution Frame Groups*.

a. VSCS Intermediate Distribution Frame (VSCS IDF). The VSCS IDF is provided as a means to interconnect the transition switch with all VSCS traffic paths and the communications control system. This IDF distributes 6-wire G/G trunk circuits directly to the MDS and distributes all other circuits and their controls to the RI IDF or VDF.

b. Radio Interface IDF (RI IDF). The RI IDF uses 110 frames to distribute voice frequency circuits between the VSCS and interfaced control RCE units manufactured by Communication Systems Technology, Inc. (CSTI). One or more pre-wired frames supply signal conditioning for the commercial RCE equipment. Other frames house jack panels for RI IDF line and drop circuit interconnections. Originally installed VSCS interface frames support only analog signals, not digital data. Therefore, modifications will be required to provide direct support for any future system providing ATC A/G digital voice and/or integrated digital data.

c. VSCS Distribution Frame (VDF). The VDF uses pre-wired 110 frames with connectorized terminal blocks for distribution from the VSCS to the BUEC, PABX, and voice recorder (HCVR and/or DVRS) systems. Another 110 frame houses jack panels for VDF line and drop circuit interconnections.

d. Master Demarcation System (MDS). The ARTCC MDS uses AT&T 110 frame systems and is the legal demarcation point between FAA equipment and public transmission services for all interfacility circuits. The MDS interface for VSCS G/G trunks is defined in the VSCS/Transmission Equipment (Analog) IRD, NAS-IR-44010002.

e. Distribution Frame Equipment. AT&T, pre-wired, 110 frame systems equipped with high-density, dual-connectorized, punch-down terminal blocks are used for VSCS IDF, RI IDF, and VDF distribution. A 110 distribution frame contains 16 dual-connectorized blocks, numbered 1-8 on the front face and 9-16 on the rear face. Frame mounted dual (back-to-back) male/female connectors provide access to each frame block. The male connectors are used for temporary or transition cabling. RI IDF blocks 9-16 are available for VSCS

FIGURE 6-10. VSCS DISTRIBUTION FRAME GROUPS

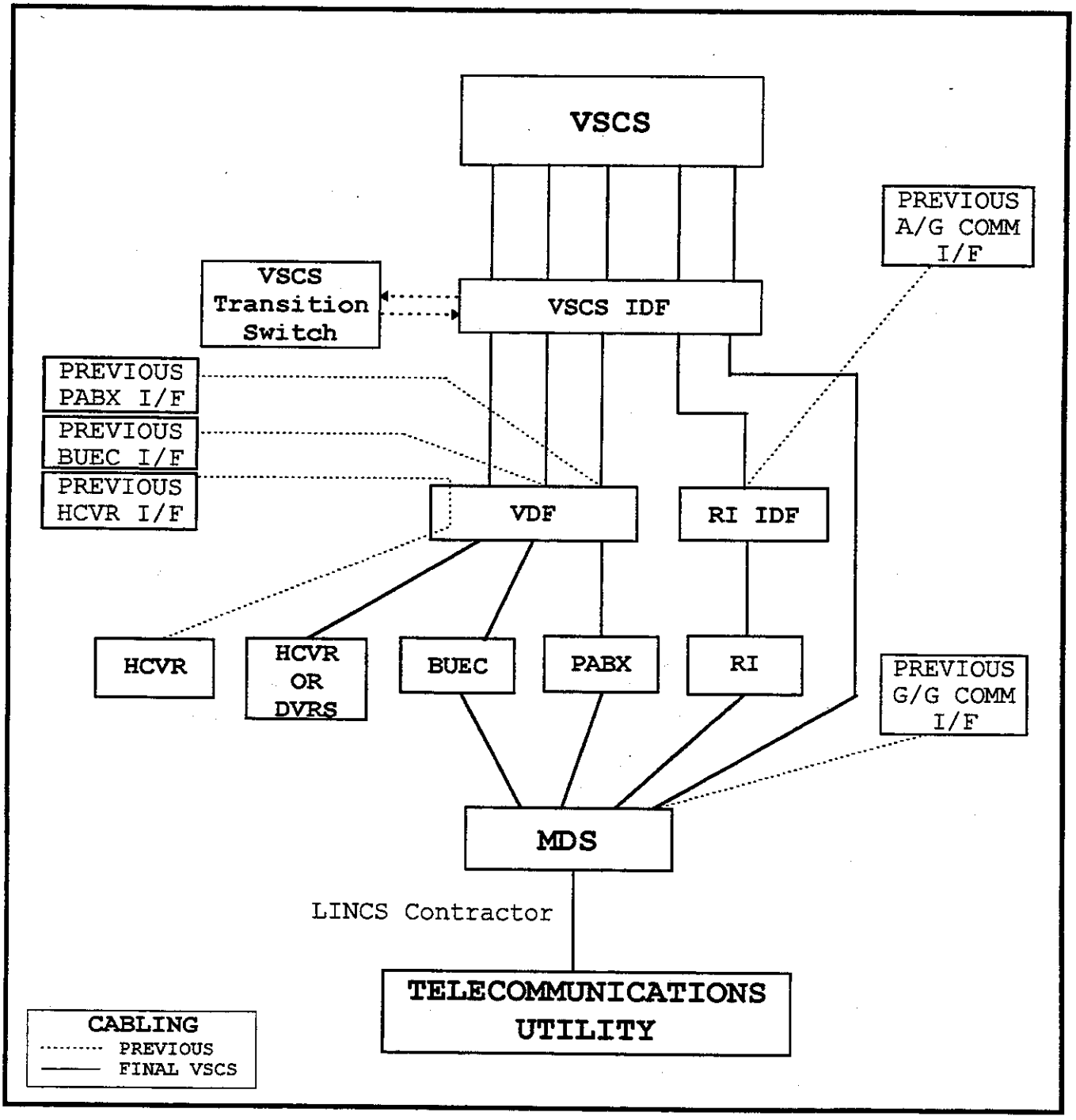

expansion only after all VSCS transition cables are removed from the frame mounted male portion of the dual connectors.

f. 110 Frame Blocks. Punch-down terminal 110 blocks are located on the upper portion of the 110 frame front and rear faces. Each high density 110 block contains 12 rows of terminals with 50 punch-down terminals in each row (600 per block). Through the back of the block, each punch-down row is connected by 25-pair cable to a dual connector mounted lower on the same frame face to access the row. Each 50-pin dual connector's female receptacle is mounted facing up and the back-to-back, parallel wired, male plug facing down. Each block's 12 dual connectors are mounted as a group for that block, and the groups are mounted in four rows, two groups to a row. Rows of block connector groups are shown in Figure 6-11, *110 Frame Connectors for Front Blocks 1-8*. On the front (rear) face, connector groups and blocks 1-8 (9-16) are mounted in the same order on each frame face, block 1 (9) and connector group 1 (9) upper left in their standard mounting areas.

g. Frame Distribution Cables. Distribution cables, Belden 1580A or equal, contain twenty-five twisted pairs of 24 AWG solid copper wire covered with flame retardant polyethylene insulation. The cable must have a drain wire, an overall foil shield, and a PVC jacket. Distribution cables from equipment are terminated in 50-pin Amphenol-type male connectors to mate with the frame mounted upward facing female connectors (receptacles) serving the frame blocks. Table 6-2, *AT&T Standard Wiring Code Table*, lists 25-pair cable connections by 50-pin number, wire pair color, and 110 AW1-300 pre-wired block terminal number used for wiring cables for 110 frames. Plenum rated cable is not required in an ARTCC basement.

h. Connector Type. Each female connector (receptacle) mounted on a 110 frame contains two retaining clips to secure its mating male cable connector (plug). The mating male cable connector must contain indentations which accept securely both retaining clips.

(1) Male Cable Connector. Two 50-pin male cable connectors that have correct indentations are TRW CINCH Part No. 77-72500-1 and AMP CHAMP Part No. 1-229912-1. The crimping tool for the TRW CINCH cable connector is Part No. SCT-332 and for the AMP CHAMP cable connector is Part No. 229378-1.

(2) Female Cable Connector. Two 50-conductor female cable connectors that have retaining clips similar to those on the 110 block mounted female connectors are TRW CINCH Part No. 97-22500-91L and AMP CHAMP Part No. 554905-1. These cable connectors, or equal, are required on all 110 frame female front-to-back interconnect cables.

FIGURE 6-11. 110 FRAME CONNECTORS FOR FRONT BLOCKS 1-8

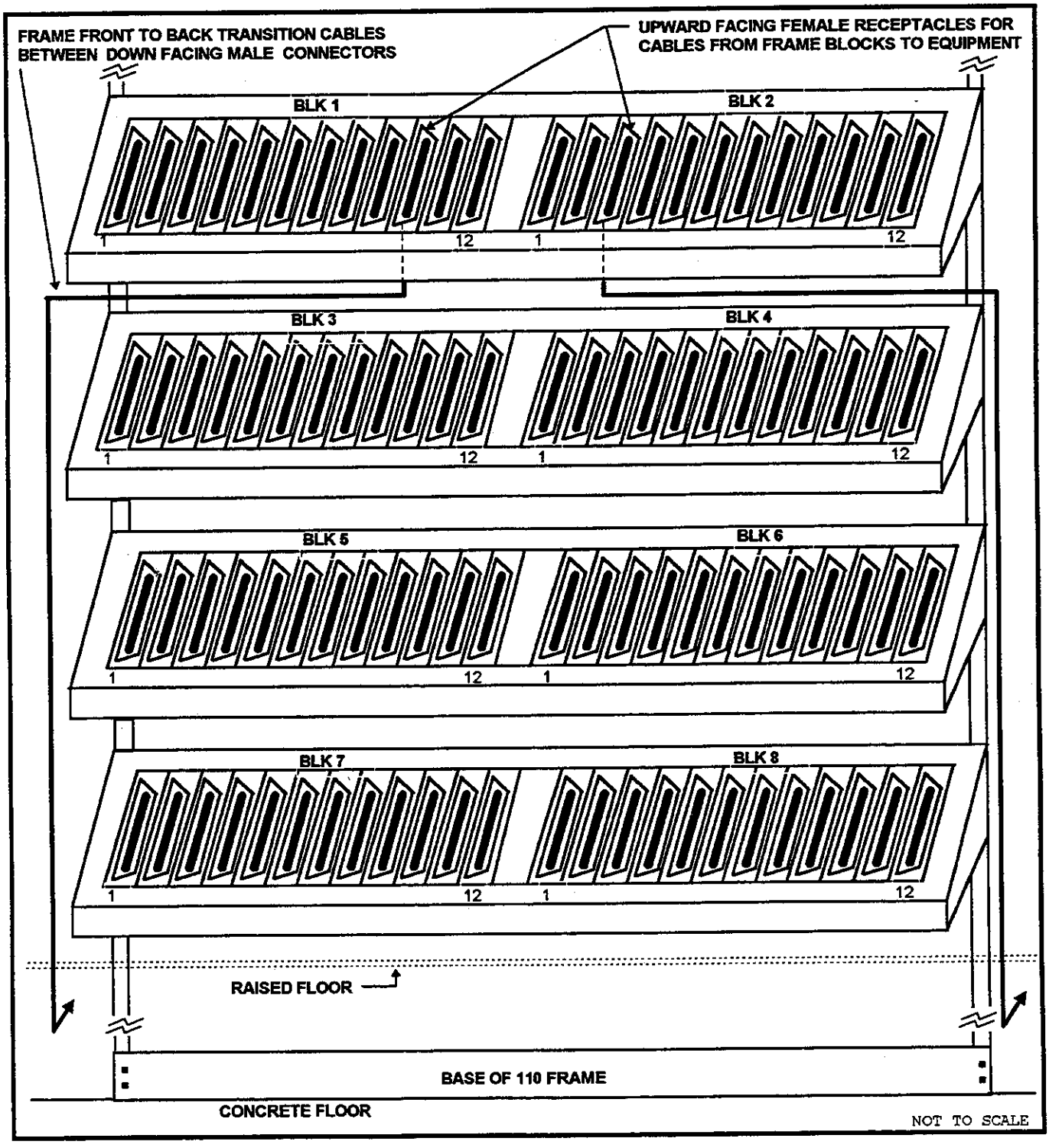

TABLE 6-2. AT&T STANDARD WIRING CODE TABLE

CONNECTOR PIN NO FOR 25 PAIR CABLE	CONDUCTOR PAIR	INSULATION COLOR-TRACER	110 AW1-300 BLOCK WIRING TERMINAL
26	1	W-BL	1
1		BL-W	2
27	2	W-O	3
2		O-W	4
28	3	W-G	5
3		G-W	6
29	4	W-BR	7
4		BR-W	8
30	5	W-S	9
5		S-W	10
31	6	R-BL	11
6		BL-R	12
32	7	R-O	13
7		O-R	14
33	8	R-G	15
8		G-R	16
34	9	R-BR	17
9		BR-R	18
35	10	R-S	19
10		S-R	20
36	11	BK-BL	21
11		BL-BK	22
37	12	BK-O	23
12		O-BK	24
38	13	BK-G	25
13		G-BK	26
39	14	BK-BR	27
14		BR-BK	28
40	15	BK-S	29
15		S-BK	30
41	16	Y-BL	31
16		BL-Y	32
42	17	Y-O	33
17		O-Y	34
43	18	Y-G	35
18		G-Y	36
44	19	Y-BR	37
19		BR-Y	38
45	20	Y-S	39
20		S-Y	40
46	21	V-BL	41
21		BL-V	42
47	22	V-O	43
22		O-V	44
48	23	V-G	45
23		G-V	46
49	24	V-BR	47
24		BR-V	48
50	25	V-S	49
25		S-V	50

212. INSTALLATION. Detailed installation drawings vary by site and are contained in each site specific Site Activation Plan (SAP). VSCS equipment is designed to be installed, removed, and reinstalled with a minimum of special tools and without excessive disassembly. Each VSCS 110 distribution frame footprint occupies about 4 sq. ft. of floor.

a. 110 Frame Installation. VSCS AT&T dual-connectorized 110 frames are installed resting on and bolted to the concrete floor below a raised floor. Horizontal bars on the outside of a 110 frame are bolted to the frame's corner vertical U-channels to further strengthen the frame. This type of installation provides the frame rigidity necessary to maintain plumb and level alignment required to support the weight of 25-pair cables connected to the 110 frames from under floor or overhead runs and interconnections of 25-pair cables or twisted pair wires between frames.

b. Distribution Frames. AT&T 110 frame systems with pre-wired, dual-connectorized, 110 high-density punch-down terminal blocks shall be used for the VSCS IDF, VDF, and RI IDF. Distribution of audio and control signals between frames shall be by 25-pair cables. Eight 110 punch-down blocks numbered 1 through 8 (or 9 through 16) are mounted on the upper portion of each front (or rear) face of a frame and are installed in four rows of two blocks each row. Blocks on each frame face are arranged in the same numerical sequence, lowest number 1 or 9 installed upper left on the frame face. Odd block numbers are always on the left and numbers increase in each lower row. Lower on the same frame face, a connector group for each block on that face is mounted in the same numerical order and corresponding position as its block.

c. Frame Blocks. A VSCS 110 frame holds 16 blocks and 16 block connector groups, 8 each on each front and rear frame face. A high density 110 block contains 12 rows of 50 punch-down terminals per row (600 per block). Each block punch-down row is connected by 25-pair cable through the back of the block to a dual connector installed lower on the frame to access the punch-down row. A block's 12 dual connectors are mounted as a block connector group lower on the 110 frame.

d. Dual Connectors. VSCS dual connectors are two 50-pin Amphenol-type connectors, one female and one male mounted back-to-back and wired in parallel. A dual connector provides access to a block terminal row for both an interface cable and a temporary cable at the same time. Dual connectors are mounted with female receptacles face up and back-to-back male plugs face down. Each female connector has retaining clips to hold securely by the shell a mated male connector.

e. Connections. Distribution cables connected to 110 frames shall be 25-pair cables with Amphenol-type connectors. On any 110 frame, all connections to a terminal block for an equipment cable, including cross-connects, shall be terminated on the same row on that block. VSCS frame-mounted, dual connector, downward faced male plugs are used only for transition cables as indicated in Figure 6-11 and in Figure 6-12, *110 Frame (Cut View) Distribution Cable Routing*.

f. Shielding and Grounding. Shielding and grounding practices in FAA-STD-019 and FAA-STD-020 shall be followed in installation of all VSCS systems. At all times, isolation shall be maintained between the ARTCC single point, multipoint, and AC protection grounding systems, except where they join on the ARTCC critical power vault ground plate/ bus or on the earth electrode ground system as described in Chapter 4.

213. RI IDF INTERFACE. The RI IDF consists of as many pre-wired 110 frames as needed to support ATC communication channels through A/G RI equipment. Each 110 frame is capable of supporting up to 192 4-wire channels. One frame contains signal conditioning equipment, if required, and another frame houses jack panels for the channels.

a. Equipment Connections. Figure 6-12 shows an end view of the lower portion of a 110 frame, cut through from front-to-back. Shown are two 25-pair cables terminated in male cable connectors, one coming from the VSCS and one from equipment. Both are routed into the RI IDF frame from beneath a raised floor and up through the center of the frame. VSCS and equipment cables plug into frame-mounted upward facing 25-pin female connectors on opposite faces of the same frame.

b. Transition Cables. Transition 25-pair cables are normally 10 feet long and are terminated in female Amphenol-type cable connectors with retaining clips. They are temporary cables run between the front and rear faces on the same frame and interconnect frame mounted down facing male connectors. As indicated in Figures 6-11 and 6-12, all transition cables are routed outside the frame instead of through the frame interior since they are temporary cables.

c. Block Arrangement. Eight 110 blocks numbered 1 through 8 (or 9 through 16) on the face of a frame are installed in four rows with two blocks numbered sequentially in each row. Blocks on each face are arranged in the same sequential order, lowest number 1 or 9 upper left on the frame face. Lower on the same frame face, each block's 12 dual connectors are mounted as a group, with two groups forming a connector row. Connector groups and rows are installed in the same numerical order as their blocks. Each block on an RI IDF frame can support 12 frequencies (channels) in selective (normal) mode or 6 in split mode.

FIGURE 6-12. 110 FRAME (CUT VIEW) DISTRIBUTION CABLE ROUTING

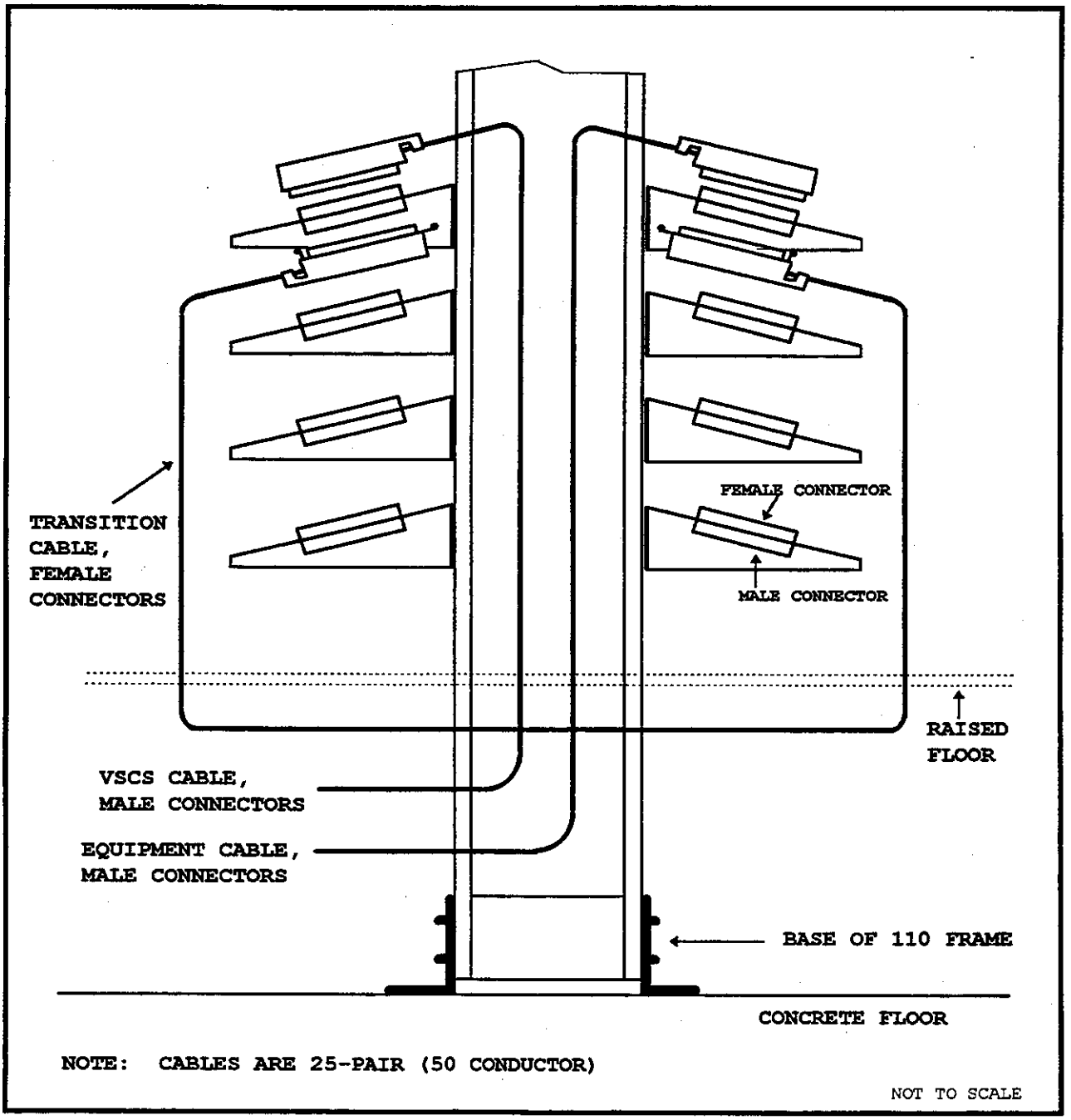

d. RI IDF Connections. Figure 6-13, *RI IDF Block Layout (Split Mode)*, shows the block arrangement on an RI IDF front face. On each block 1 through 8, odd numbered punch-down pin rows 1,3,5,7,9 & 11 are reserved for interfacing directly with the VSCS and even numbered punch-down pin rows 2,4,6,8,10 & 12 are reserved for interfacing directly with RI equipment. During transition only, on each block 9 through 16, even numbered punch-down rows were used for interfacing with the previous Voice Frequency Control System (VFCS).

(1) Selective Mode. For selective mode operation, audio and control signals, combined for frequencies A (usually VHF) and B (usually UHF), terminate only on odd numbered blocks. Equipment operating in selective mode is not connected to even numbered blocks. Signals are routed from a VSCS to the RI IDF and then to RI equipment which has been set up to operate in selective mode. CSTI RCE can be operated in selective mode. In Table 6-3, *RI IDF Connector Block Port Assignments*, Table 6-3A, *Selective Mode*, lists circuit assignments per block to accommodate selective mode equipment.

(2) Split Mode. For split mode operation, signals for frequency A are terminated on odd numbered RI IDF blocks and for frequency B on even numbered RI IDF blocks. Split mode operation requires that VSCS control signals provided through frequency A connections shall be connected to control both A and B frequency RI equipment. Frequency B side of the RI is not used in split mode operation. CSTI RCE RI equipment can be operated in split mode. Table 6-3B, *Split Mode*, lists circuit assignments for each RI IDF block to accommodate split mode equipment.

(3) Radio Interface (RI) Pin Assignments. Audio and control punch-down pin (terminal) assignments for the RI are the same for operation in selective mode or split mode. However, in split mode the B or UHF punch-down pins are unused. All systems that require access to the RI must use the exact pin assignments required for the particular radio control equipment in use in order to be compatible with the specific VSCS interface cards installed. For example, connections between the RI and Intelect equipment were unique.

(4) RI IDF Cross-Connects. Twisted pairs carrying transmit audio from punch-down pins 1 & 2 and receive audio from punch-down pins 5 & 6 from all 12 punch-down rows on one block are connected to jack panel rear connectors via a pair of line and drop 25-pair cables. Each 25-pair cable can carry audio for 12 VHF or UHF frequencies. Audio signals on odd numbered punch-down rows go to the drop side connector. Audio signals on even numbered rows go to the line side.

FIGURE 6-13. RI IDF BLOCK LAYOUT (SPLIT MODE)

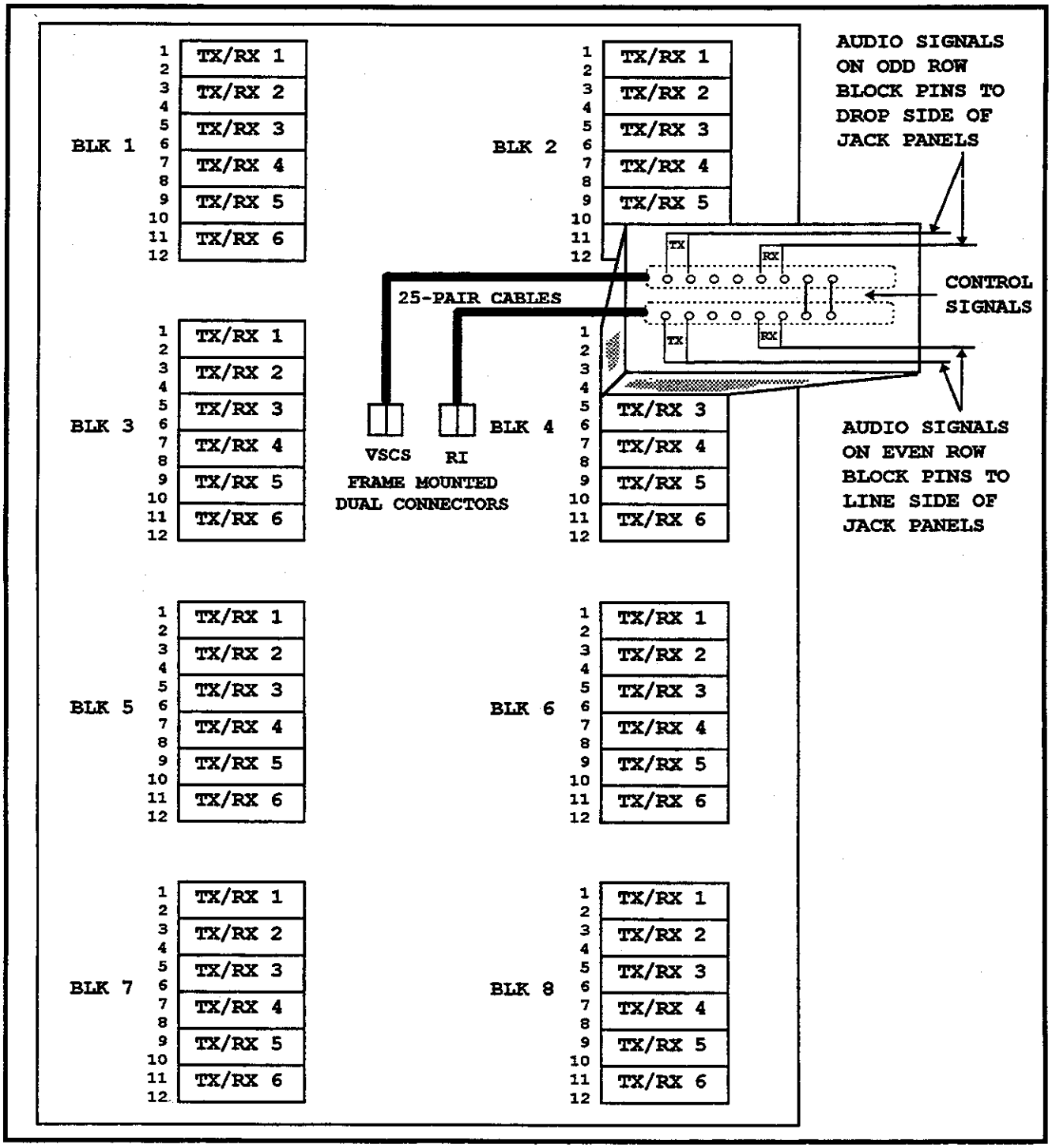

TABLE 6-3. RI IDF CONNECTOR BLOCK PORT ASSIGNMENTS

SELECTIVE MODE	BLOCKS 1, 3. 5, 7				BLOCKS 9, 11, 13, 15	
	VSCS		RI		VFCS TO TRANSITION	
	ROW	PIN #	ROW	PIN #	ROW	PIN #
CKT 1 & 2	1	1-50	2	1-50	2	1-50
CKT 3 & 4	3	1-50	4	1-50	4	1-50
CKT 5 & 6	5	1-50	6	1-50	6	1-50
CKT 7 & 8	7	1-50	8	1-50	8	1-50
CKT 9 & 10	9	1-50	10	1-50	10	1-50
CKT 11 & 12	11	1-50	12	1-50	12	1-50

TABLE 6-3A. SELECTIVE MODE

SPLIT MODE	BLOCKS 1, 2, 3, 4, 5, 6, 7, 8				BLOCKS 9, 10, 11, 12, 13, 14, 15, 16	
	VSCS		RI		VFCS TO TRANSITION	
	ROW	PIN #	ROW	PIN #	ROW	PIN #
CKT 1	1	1-50	2	1-50	2	1-50
CKT 2	3	1-50	4	1-50	4	1-50
CKT 3	5	1-50	6	1-50	6	1-50
CKT 4	7	1-50	8	1-50	8	1-50
CKT 5	9	1-50	10	1-50	10	1-50
CKT 6	11	1-50	12	1-50	12	1-50

TABLE 6-3B. SPLIT MODE

connector. Control signals on each block are cross-connected between VSCS punch-down rows and RI signal punch-down rows as in Figure 6-13.

(5) RI Jack Panels. Each RI jack panel can support transmit and receive audio for 24 A/G frequencies (channels) to accommodate two RI IDF blocks. A front RI jack panel allows access to paired transmit and receive audio for 12 each VHF and UHF A/G frequencies. VHF audio access is on the left half of the front panels and UHF on the right

half. Transmit and receive audio from each odd/even pair of punch-down rows on one RI IDF block is routed in one pair of drop and line cables to jack panel rear Amphenol-type 50-pin connectors designated for VHF drop and line or UHF drop and line. Figure 6-14, *Radio Interface (RI) Jack Panel (JP) Layout*, shows RI jack panel front and rear connection layouts.

214. VDF INTERFACES. VDF 110 frame systems provide the VSCS with interfaces specific to S-BUEC RCE, old BUEC transceiver priority module, HCVR, DVRS, 6-wire G/G, and PABX circuits and equipment. All interfacing with the VDF is through 25-pair cables terminated in 50-pin Amphenol type connectors.

a. VDF BUEC Frame. Each front and rear face of a VDF BUEC frame contains eight 110 high density terminal blocks, numbered 1 through 8 on the front face and 9 through 16 on the rear face. Each BUEC 110 punch-down block provides connections for up to 18 BUEC circuits to support up to 144 BUEC circuits from each face of a VDF frame. Figure 6-15, *VDF BUEC Block Layout*, shows the VSCS standard arrangement of numbered connectorized, 110 high density, terminal blocks with typical BUEC cross connections indicated on block punch-down pin rows.

(1) 110 Block Arrangement. The 8 terminal blocks numbered 9 through 16 on the rear face of a 110 frame are arranged in the same consecutive order as blocks 1 through 8 on the front face shown in Figure 6-15. Block numbers 1 and 9 are always the top left blocks.

(2) BUEC Block Connections. Each VDF frame high density 110 block contains 12 rows of terminals with 50 punch-down pins in each row. On BUEC blocks numbered 1 through 8, odd numbered punch-down rows interface directly with the VSCS and even numbered punch-down rows interface directly either with old BUEC priority modules (BPM) for old BUEC transceivers or with RCE for new S-BUEC radios. During transition, on BUEC blocks 9 through 16, odd numbered punch-down pin rows were reserved for transition cable connections, and even numbered punch-down pin rows interfaced directly with old BUEC equipment which now has been removed. After all old BUEC transition cross-connect block wiring and transition cables have been removed from 50-pin dual connector groups 9 through 16, VDF frame blocks 9 through 16 can be used for S-BUEC with the same row and pin assignments as blocks 1-8.

(3) VDF BUEC Wiring. Connections between the VDF and RCE or BPMs are via 25-pair cables with Amphenol-type connectors. Each 50-pin mounted connector serves 3 BUEC circuits and shall use the circuit assignments shown in Table 6-4, *VDF BUEC Connector Block Port Assignments*. Pin assignments are specified to ensure compatibility

FIGURE 6-14. RADIO INTERFACE (RI) JACK PANEL (JP) LAYOUT

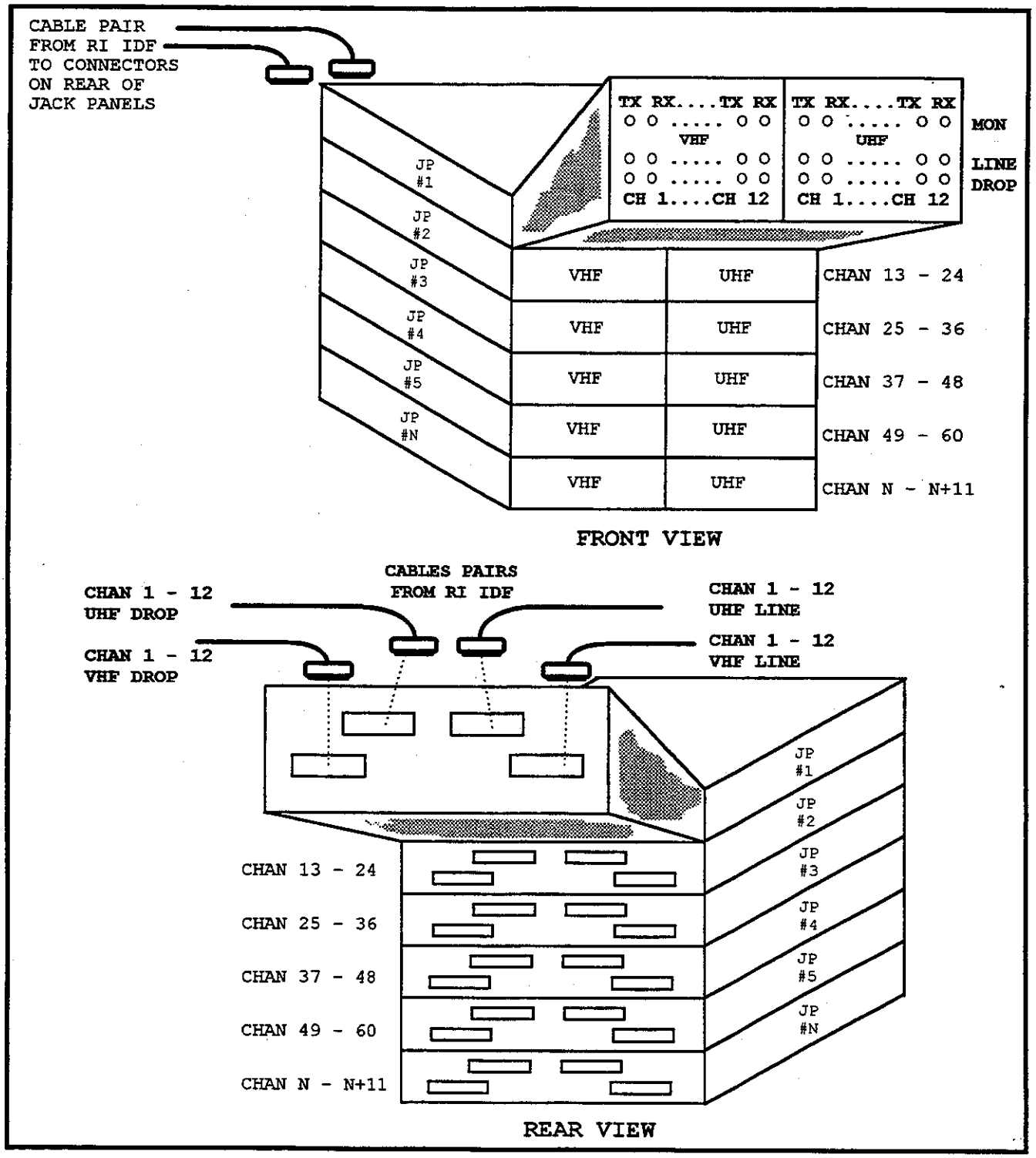

FIGURE 6-15. VDF BUEC BLOCK LAYOUT

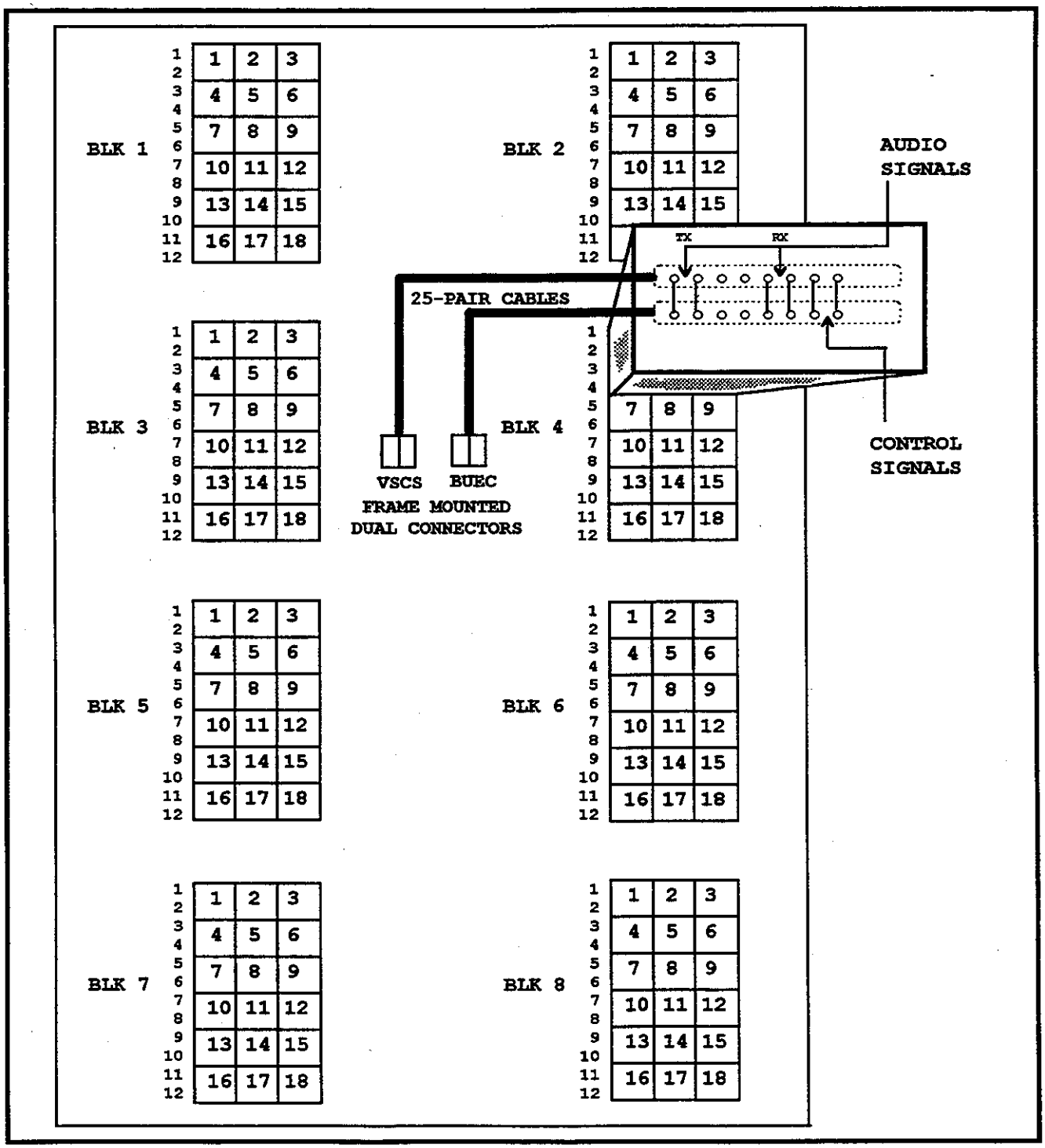

TABLE 6-4. VDF BUEC CONNECTOR BLOCK PORT ASSIGNMENTS

	BLOCKS 1, 2, 3, 4, 5, 6, 7, 8				BLOCKS 9, 10, 11, 12, 13, 14, 15, 16	
BUEC	VSCS		BPM		BUEC IDF TRANSITION	
CIRCUIT	ROW	PIN #	ROW	PIN #	ROW	PIN #
CKT 1	1	1-14	2	1-14	2	1-14
CKT 2	1	17-30	2	17-30	2	17-30
CKT 3	1	33-46	2	33-46	2	33-46
CKT 4	3	1-14	4	1-14	4	1-14
CKT 5	3	17-30	4	17-30	4	17-30
CKT 6	3	33-46	4	33-46	4	33-46
CKT 7	5	1-14	6	1-14	6	1-14
CKT 8	5	17-30	6	17-30	6	17-30
CKT 9	5	33-46	6	33-46	6	33-46
CKT 10	7	1-14	8	1-14	8	1-14
CKT 11	7	17-30	8	17-30	8	17-30
CKT 12	7	33-46	8	33-46	8	33-46
CKT 13	9	1-14	10	1-14	10	1-14
CKT 14	9	17-30	10	17-30	10	17-30
CKT 15	9	33-46	10	33-46	10	33-46
CKT 16	11	1-14	12	1-14	12	1-14
CKT 17	11	17-30	12	17-30	12	17-30
CKT 18	11	33-46	12	33-46	12	33-46

between a BUEC RCE unit or a BPM and the VSCS. Cross connections for audio and control signals are made directly between adjacent odd/even punch-down pin rows reserved for VSCS and identical connections to BUEC RCE units or BPMs. Jack panels are not required for BUEC circuits.

b. VDF PABX Frame. PABX circuits can occupy the bottom two high density 110 terminal blocks on each front and rear face of a shared VDF 110 frame. HVCR or DVRS and 6-wire G/G circuits can occupy the other six terminal blocks on each face of that frame. A connectorized PABX punch-down terminal block can interface the VSCS with up to 36 PABX circuits for up to 72 PABX circuits supported on a frame face. Figure 6-16, *VDF PABX Frame Layout*, shows typical PABX cross connects on 110 punch-down terminal blocks 7 and 8 on a shared frame.

(1) PABX Block Connections. Odd numbered punch-down pin rows on PABX blocks 7 and 8 (or 15 and 16) interface directly with the VSCS. Even numbered punch-down pin rows interface directly with the PABX. Before transition to VSCS, even numbered punch-down rows on PABX blocks 15 and 16 on a rear frame face were connected to separate PABX control equipment. After transition, PABX circuits are controlled through the VSCS. After all PABX transition wiring and cabling is removed, blocks 15 and 16 on the rear frame face can be used for PABX expansion circuits. Block 15 is always the lower left block on the rear face of a VSCS 110 frame.

(2) PABX Block Connectors. A VDF PABX 110 block can support 2, 4, 6, and 8-wire circuits, as required, through twelve 50-pin dual Amphenol-type connectors. Each female/male dual connector serves one of the twelve punch-down 50-pin rows on a 110 terminal block. Each female receptacle is mounted facing upward with its back-to-back parallel-wired male plug facing downward. The 12 dual connectors from each block are mounted as a connector group lower on the frame face as shown in Figure 6-11. The two PABX connector groups, 7 and 8 (or 15 and 16), are mounted as the bottom connector row of that frame face in the same numerical order and relative position as their blocks. A PABX block punch-down row connects to its dual connector by a 25-pair cable.

(3) VDF PABX Wiring. Table 6-5, *VDF PABX Connector Block Port Assignments*, lists circuit assignments for each PABX connector block. Adherence to standard PABX punch-down row pin assignments is required for PABX system compatibility. Each 25-pair cable can carry six circuits with 8 wires per circuit to accommodate audio and control signals. Audio signal and control signal cross connections are made directly between punch-down pin rows reserved for the VSCS and rows

FIGURE 6-16. VDF PABX FRAME LAYOUT

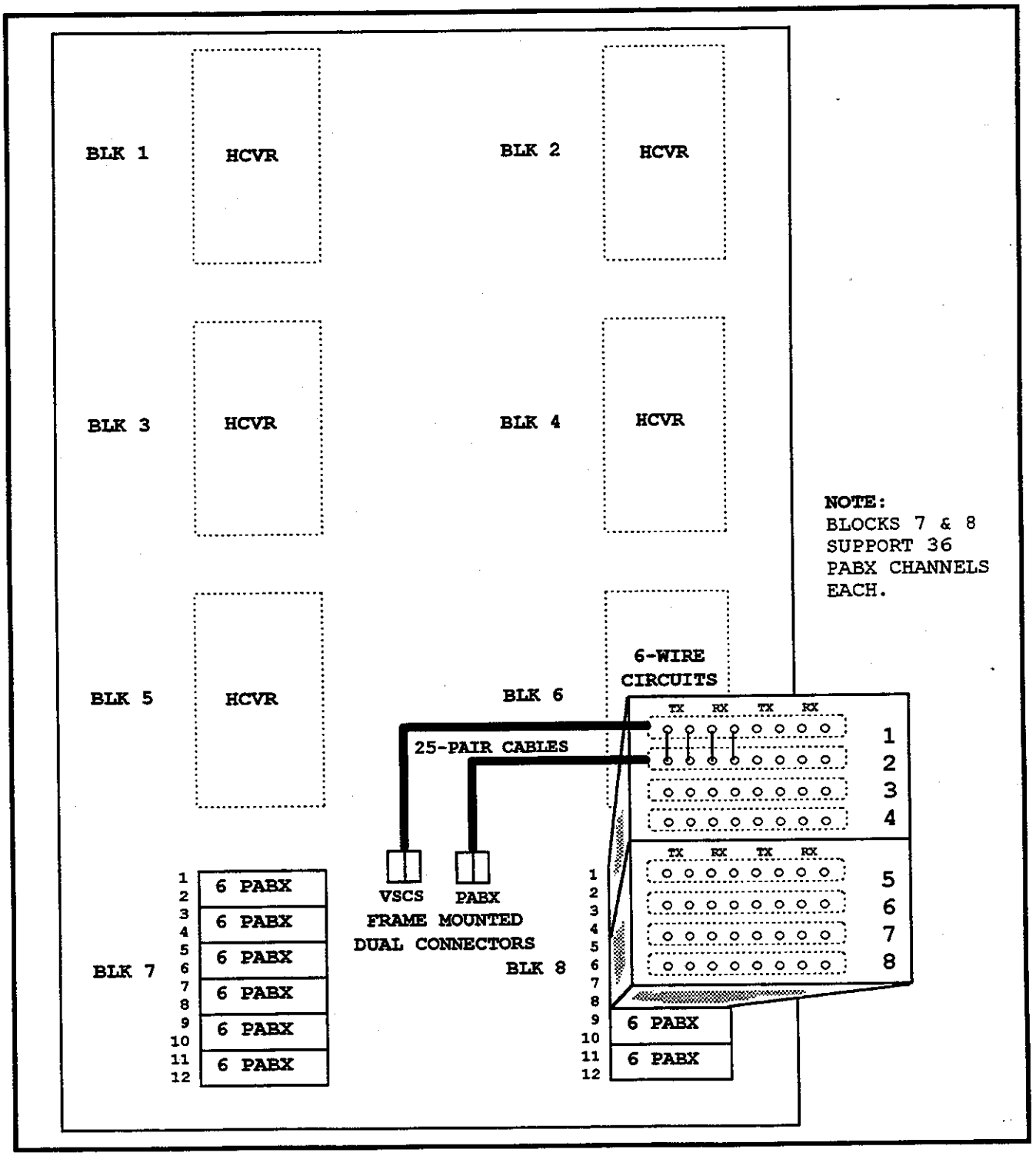

TABLE 6-5. VDF PABX CONNECTOR BLOCK PORT ASSIGNMENTS

	BLOCKS 7 & 8				BLOCKS 15 & 16	
PABX	VSCS		PABX		TRANSITION ACCESS	
CIRCUIT	ROW	PIN #	ROW	PIN #	ROW	PIN #
CKT 1	1	1-8	2	1-8	2	1-8
CKT 2	1	9-16	2	9-16	2	9-16
CKT 3	1	17-24	2	17-24	2	17-24
CKT 4	1	25-32	2	25-32	2	25-32
CKT 5	1	33-40	2	33-40	2	33-40
CKT 6	1	41-48	2	41-48	2	41-48
CKT 7	3	1-8	4	1-8	4	1-8
CKT 8	3	9-16	4	9-16	4	9-16
CKT 9	3	17-24	4	17-24	4	17-24
CKT 10	3	25-32	4	25-32	4	25-32
CKT 11	3	33-40	4	33-40	4	33-40
CKT 12	3	41-48	4	41-48	4	41-48
CKT 13	5	1-8	6	1-8	6	1-8
CKT 14	5	9-16	6	9-16	6	9-16
CKT 15	5	17-24	6	17-24	6	17-24
CKT 16	5	25-32	6	25-32	6	25-32
CKT 17	5	33-40	6	33-40	6	33-40
CKT 18	5	41-48	6	41-48	6	41-48
CKT 19	7	1-8	8	1-8	8	1-8
CKT 20	7	9-16	8	9-16	8	9-16
CKT 21	7	17-24	8	17-24	8	17-24
CKT 22	7	25-32	8	25-32	8	25-32
CKT 23	7	33-40	8	33-40	8	33-40
CKT 24	7	41-48	8	41-48	8	41-48
CKT 25	9	1-8	10	1-8	10	1-8
CKT 26	9	9-16	10	9-16	10	9-16
CKT 27	9	17-24	10	17-24	10	17-24
CKT 28	9	25-32	10	25-32	10	25-32
CKT 29	9	33-40	10	33-40	10	33-40
CKT 30	9	41-48	10	41-48	10	41-48
CKT 31	11	1-8	12	1-8	12	1-8
CKT 32	11	9-16	12	9-16	12	9-16
CKT 33	11	17-24	12	17-24	12	17-24
CKT 34	11	25-32	12	25-32	12	25-32
CKT 35	11	33-40	12	33-40	12	33-40
CKT 36	11	41-48	12	41-48	12	41-48

reserved for the PABX. Jack panels are not required for a PABX interface.

c. VDF HCVR or DVRS Frame. HCVR or DVRS circuits of A/G and G/G controller and pilot voice communications occupy at least the upper four terminal blocks 1 through 4 on each front face and blocks 9 through 12 on each rear face of a shared VDF 110 frame. PABX and/or 6-wire G/G circuits can occupy lower terminal blocks on the faces of a VDF HCVR or DVRS 110 frame as shown in Figure 6-17, *HCVR VDF Rear Layout, Method 1 Block Connections*, and Figure 6-18, *HCVR VDF Front Layout, Method 1 Block Connections*.

(1) HCVR and DVRS Block Circuits. HCVR and DVRS high density 110 terminal blocks carry both A/G and G/G 2-wire voice circuits from each controller position and console. In selective (normal) mode, A/G audio and G/G audio both share channel A. In split mode, A/G audio is present on channel A and G/G audio on channel B. Both channels A and B are wired from each VCE position or console to record in any mode.

(2) HCVR and DVRS Block Connections. Each 110 block contains 12 rows of terminals with 50 punch-down pins in each row. In any punch-down row on HCVR or DVRS blocks, odd numbered punch-down pins are for tip and even numbered pins are for ring connections. On rear face blocks 9 through 12, odd numbered punch-down rows interface directly with the VSCS. On front face blocks 1 through 4, odd numbered punch-down rows interface directly with older M1 or newer consoles. Even numbered rows all interface with HCVR or DVRS equipment utilizing jack panels. Two different methods are used to interface with HCVR or DVRS equipment through jack panels.

(a) Method 1. Method 1 uses pairs of line and drop 25-pair cables, each with a male connector on one end only. Each unterminated cable end has its wires fanned out and punched down onto either a line, odd numbered, or a drop, even numbered, row of punch-down pins on a VDF connectorized HCVR block. Connectors terminating the other ends of the cable pairs are plugged into jack panel line and drop rear mounted connector pairs. Each line and drop pair is cross connected on a jack panel to provide a return path through the drop cable back to its VDF HCVR block. The drop return path interfaces with HCVR or DVRS equipment through the VDF HVCR block even row frame mounted connector. See block layouts in Figures 6-17 and 6-18.

(b) Method 2. Method 2 uses odd/even row direct cross connections on the VDF connectorized HCVR punch-down block. Amphenol type male connectorized 25-pair cables then connect the even numbered row block connectors to jack panel rear mounted line connectors.

FIGURE 6-17. HCVR VDF REAR LAYOUT, METHOD 1 BLOCK CONNECTIONS

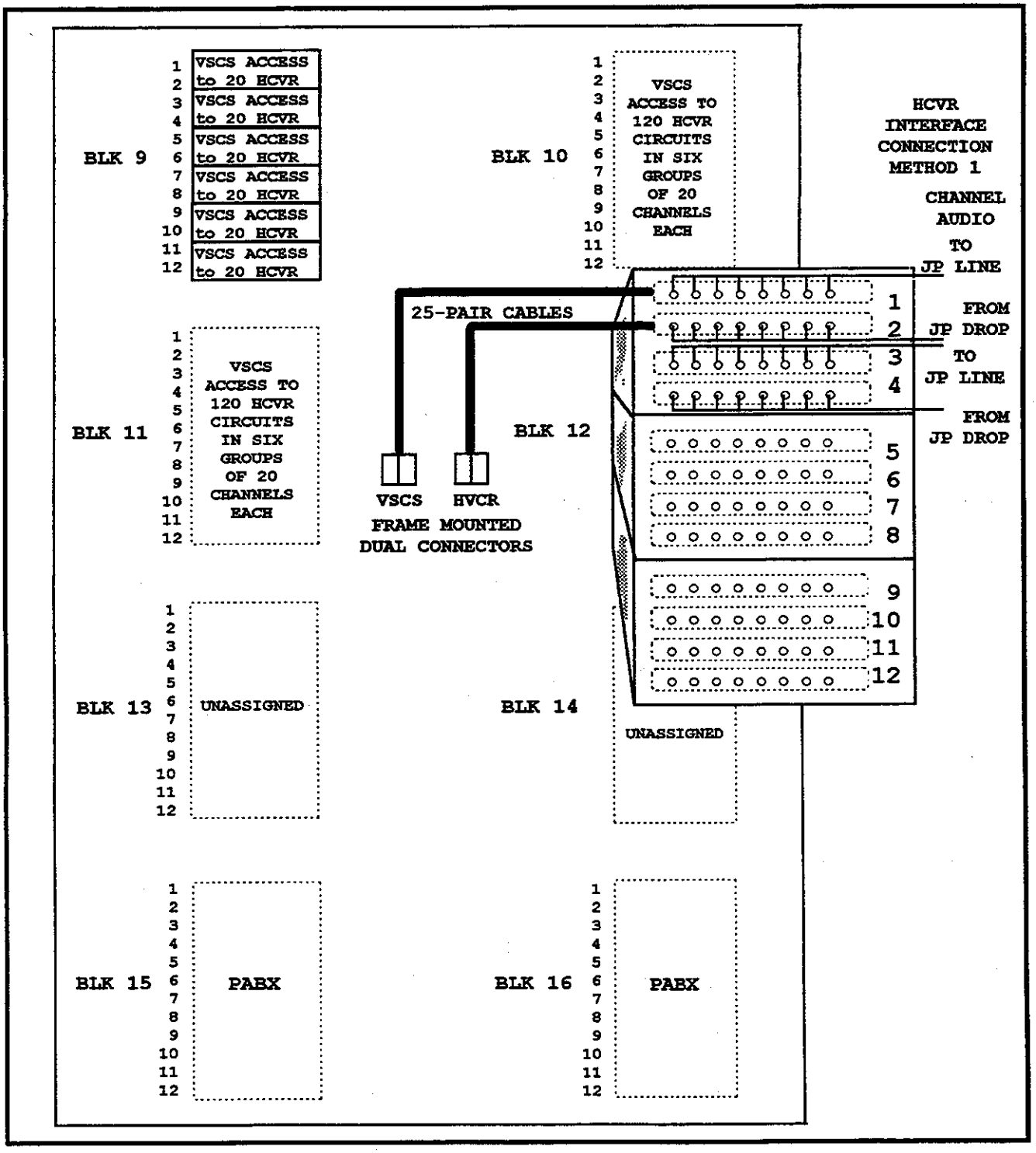

FIGURE 6-18. HCVR VDF FRONT LAYOUT, METHOD 1 BLOCK CONNECTIONS

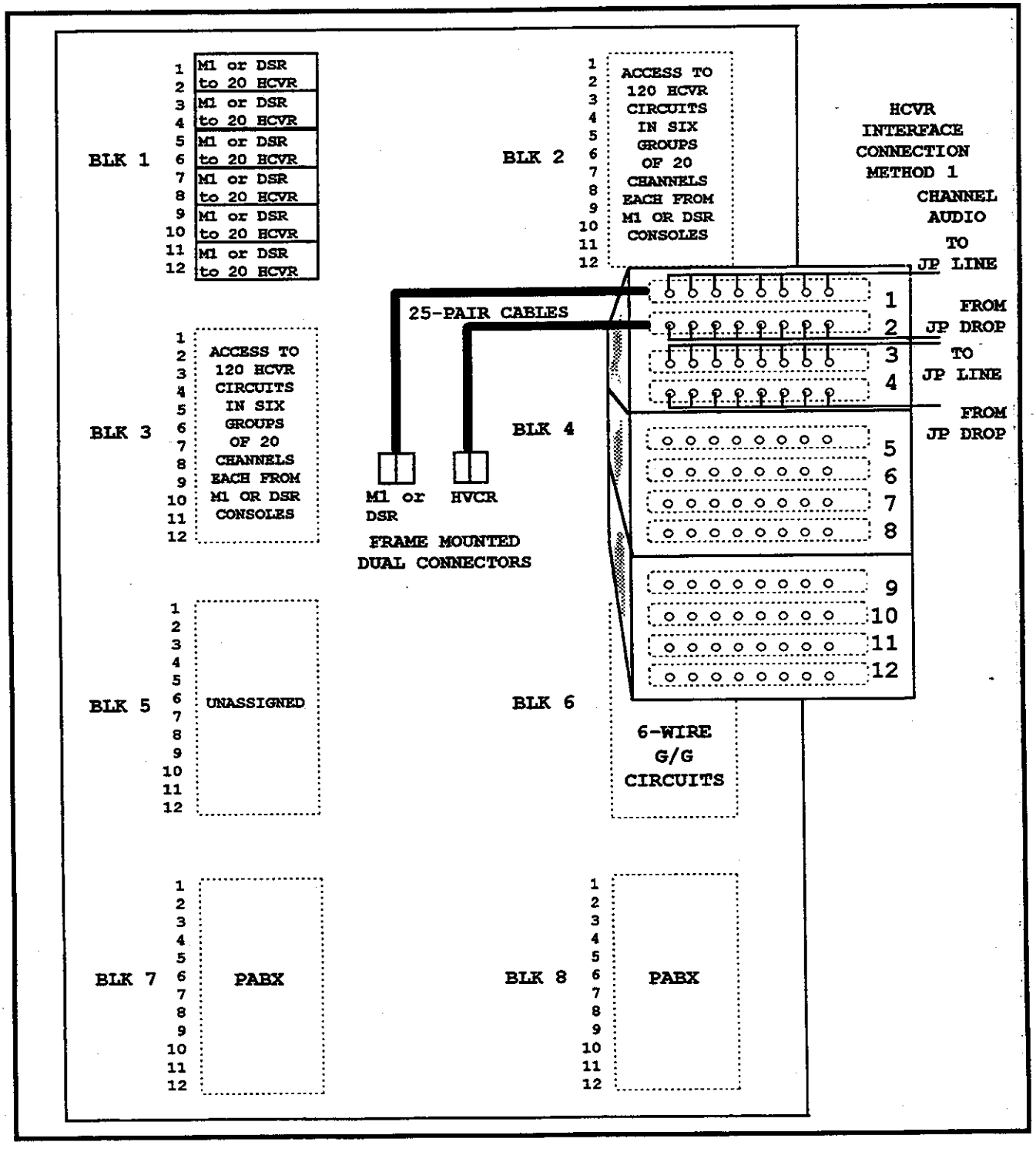

Cross connections from line to drop are made at the jack panels. From jack panel rear mounted drop connectors, 25-pair cables connect to HCVR or DVRS equipment. See Figures 6-19 and 6-20 for VDF front and rear HCVR block layouts with method 2 block connections. Rear cable connections are shown in Figure 6-21, *HCVR Jack Panel Layout*.

(3) VDF HCVR Wiring. Each 25-pair HCVR interface cable dedicates a pair of wires per channel to complete tip and ring circuits for each channel. Each VDF HCVR block row interfaces 20 channels with an HVCR and includes timing on channel 1. Each HCVR system records 60 channels from 120 tip and ring connections.

(4) VDF DVRS Wiring. Each 25-pair DVRS interface cable dedicates a pair of wires per channel to complete tip and ring circuits for each channel. Each VDF DVRS block row can interface 24 channels with a DVRS and timing is included on each channel. Each DVRS system records 48 channels from 96 tip and ring connections.

d. VDF 6-Wire G/G Frame. Block 6 on the front of A VDF frame shared with HCVR and PABX blocks is reserved for 6-wire G/G communication circuits. These G/G circuits are routed directly from the VSCS IDF to the MDS for interfacing with telephone trunks. G/G interphone (IP) circuits provide the capability of phone calls from ARTCC ATC positions directly to ATC positions in other ATC facilities. The location of block 6 on the front face of a VDF HCVR frame is shown in Figures 6-18 and 6-20.

215. VSCS EMERGENCY ACCESS RADIO SYSTEM (VEARS). Each ARTCC shall have VEARS equipment installed to be available in case of catastrophic failure of the VSCS. A VEARS module in each ATC position console provides independent paths that bypass the VSCS to restore ARTCC controller/pilot primary A/G channel communications through an RCAG and also sends voice communications to an ARTCC voice recorder. VEARS does not support BUEC channels or local radios.

a. Operation. Each VEARS module is activated by plugging a headset or handset into the module jackbox. The controller can select main/standby transmitter or receiver, headset volume level, and PTT keying. Modules are single (1 channel), dual (2 channels), or quad (4 channels) to provide frequency diversity needed in larger airspaces.

b. Equipment. VEARS channel equipment consists of single, dual, and quad modules; multipair cables; separate speakers; and a radio control adapter (RCA)/patch rack, which switches ATC primary channel access between VEARS and VSCS. Operation is manual to be as simple and as failsafe as possible and requires no software.

FIGURE 6-19. HCVR VDF REAR LAYOUT, METHOD 2 BLOCK CONNECTIONS

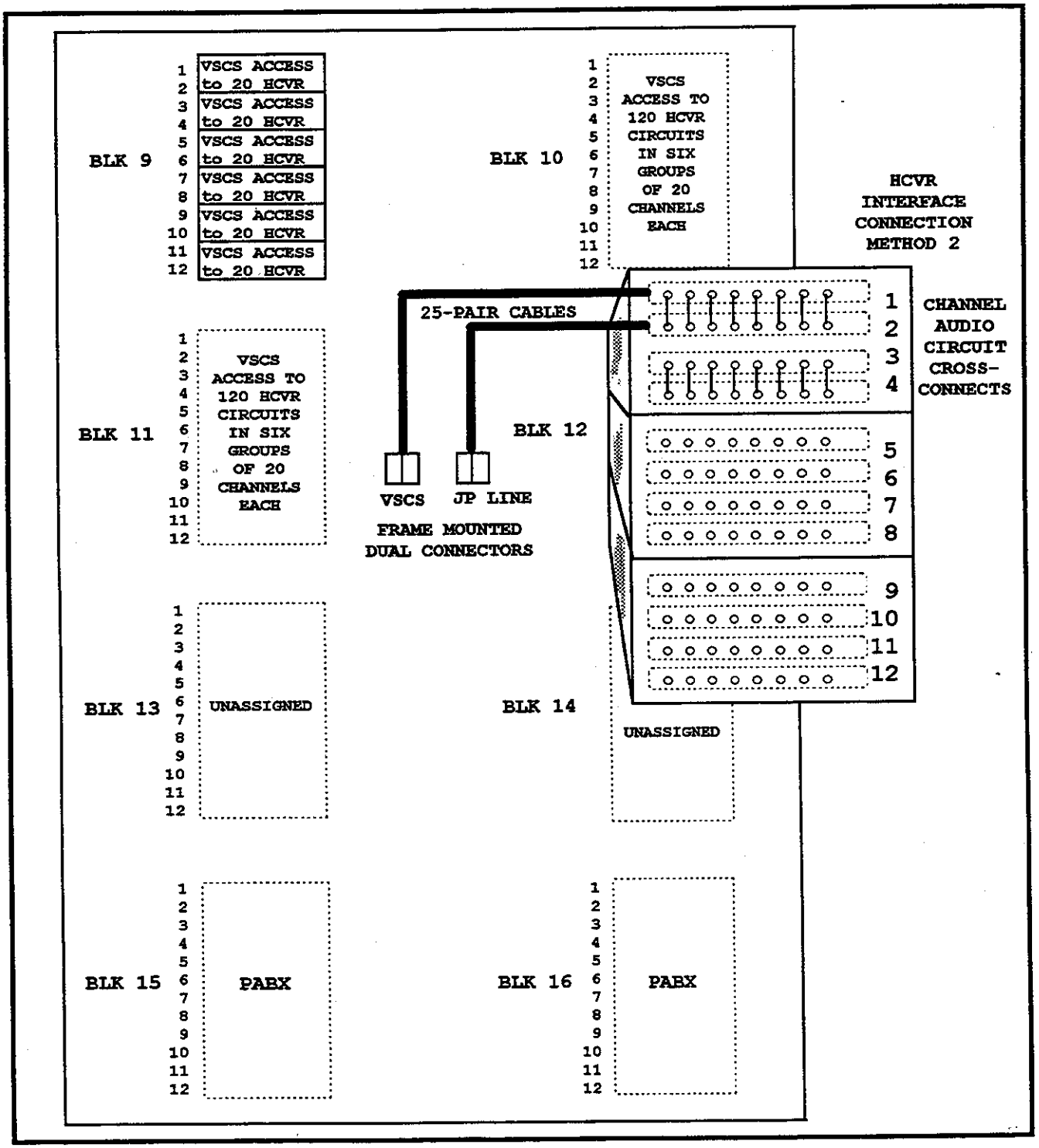

FIGURE 6-20. HCVR VDF FRONT LAYOUT, METHOD 2 BLOCK CONNECTIONS

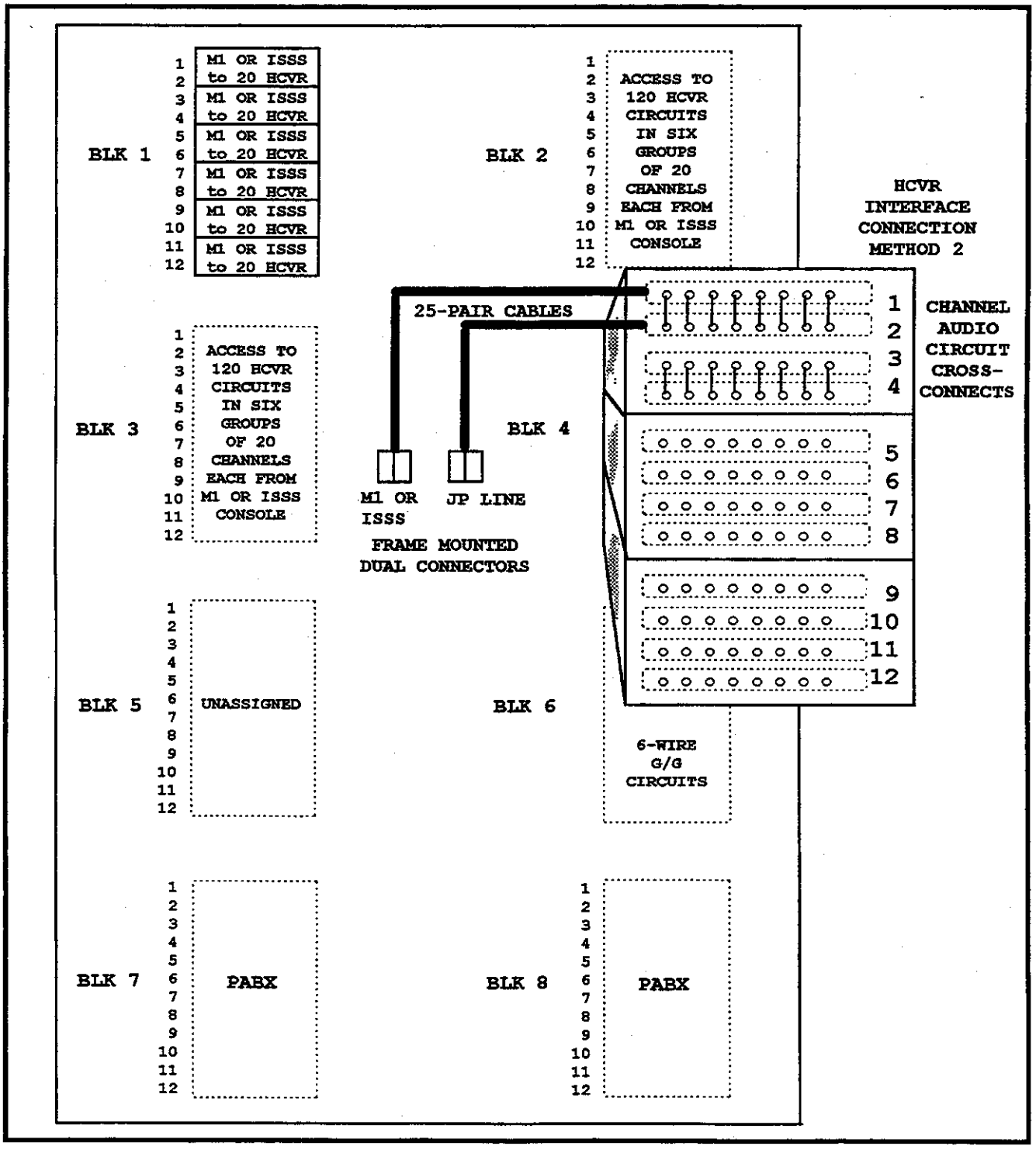

FIGURE 6-21. HCVR JACK PANEL LAYOUT

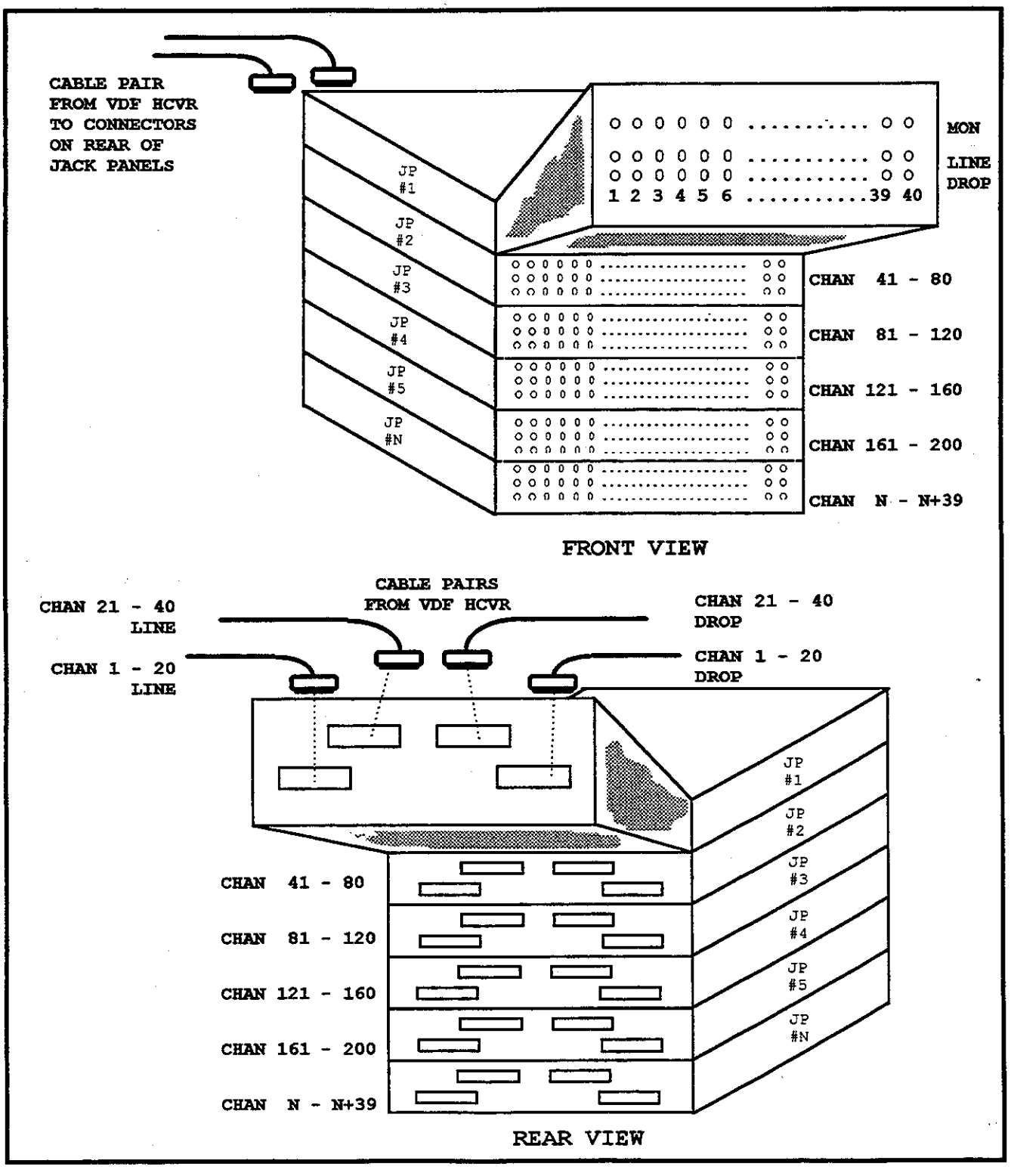

(1) Single Module. VEARS single module operation provides one VHF/UHF frequency pair per sector and can be keyed for paired VHF/UHF transmission. The module provides M/S transmitter and receiver selection, headset volume control, PTT indication, and a loudspeaker selector with an ON indicator.

(2) Dual Module. A VEARS dual module accommodates frequency diversity by including a selector A/B switch to connect the VEARS to either of two A/G primary channels. M/S radio selection is made independently as for a single module, but PTT and headset audio are dependent upon the A/B switch selection. For the A/G channel not selected, the controller PTT cannot be activated, and receive audio from that channel is routed to a remote speaker.

(3) Quad Module. A VEARS quad module provides independent access to four primary channels. Each channel frequency has independent selection of M/S transmitter or receiver equipment. A three position toggle switch can turn off audio or route audio to either the headset or a remote speaker. The TX/RX switch can select either transmit or receive for one or all four channel frequencies.

(4) Loudspeaker (LS). All VEARS modules have external speakers that support only VEARS audio. Each speaker assembly contains a four inch speaker, a one watt amplifier, and a volume control.

216-220. RESERVED.

SECTION 5. MASTER DEMARCATION SYSTEM (MDS)

221. GENERAL. The MDS, called the Master Demarc, is the physical point at which telecommunication lines internal to the ARTCC are interfaced to telephone trunks and other landlines exiting from the ARTCC. Main/Standby (M/S) A/G radio, BUEC, G/G, PABX, and RCL communication systems in the ARTCC interface on the MDS to external leased lines or FAA owned landlines. The MDS is the legal separation point between internal telecommunication lines and external leased lines. Line connections on the MDS can provide access for line fault testing and for patching out faulty circuits if required.

222. MDS EQUIPMENT CONFIGURATION. Most MDS frames are pre-wired, dual-connectorized 110 frame systems containing high density 110 terminal blocks. At least one other MDS 110 frame contains jack panels. All MDS installations shall include surge protection on each external line before the line is connected to an ARTCC internal line. The MDS equipment configuration must include expansion capability and provide flexibility for maintenance and growth without disconnecting installed cables.

a. Physical Location. MDS frames are grouped in the equipment room in an accessible location. The MDS site must be capable of accommodating multiple interfacing cables and must be located where external circuits can exit the ARTCC as directly and as immediately as possible. Located near the MDS are one or more 110 frames containing automatic line test equipment (ALTE) which performs automatic testing of analog transmission lines in order to find line troubles quickly.

b. A/G Interface. In the ARTCC, audio and control circuits for M/S A/G radios have path continuity to and from the VSCS A/G switch through the VSCS IDF, the RI IDF, RCE, and a 4-wire trunk IDF system which is connected by 25-pair cables to the MDS. MDS A/G frames accommodate both transmit and receive A/G audio with in-band signaling in each 4-wire trunk circuit.

c. G/G Interface. ARTCC G/G audio and voice frequency data for RCL, DMN modem, and NADIN circuits have path continuity to and from the VSCS G/G switch through the VSCS IDF which is connected by 25-pair cables directly to the MDS. G/G MDS trunks and tielines contain 6-wire, 4-wire, or 2-wire circuits with in-band signaling as required.

d. BUEC Interface. In an ARTCC, audio and control circuits for BUEC A/G radios have path continuity to and from the VSCS A/G switch through the VSCS IDF, the VDF, BUEC control equipment, and a 4-wire trunk IDF system which is connected by 25-pair cables to the MDS. MDS

BUEC frames accommodate both transmit and receive audio with in-band signaling in each 4-wire trunk circuit.

e. PABX Interface. ARTCC PABX circuits have path continuity to and from the VSCS G/G switch through the VSCS IDF, the VDF, and a 4-wire trunk IDF system which is connected by 25-pair cables to the MDS. MDS PABX trunks contain 4-wire circuits with in-band signaling.

f. Exiting Circuits. External trunks and tielines leaving an ARTCC from the MDS are leased Telco lines, LINCS lines, RCL circuits, or FAA owned landlines. The type and quantity of lines required depends upon the service needed by that particular ARTCC.

223. MATERIALS AND EQUIPMENT. An ARTCC MDS includes AT&T dual-connectorized, pre-wired, 110 frame systems. MDS frames contain either high density 110 terminal blocks for interfacing telephone trunk and other circuit cables to the MDS or jackfield systems for cross-connecting and accessing MDS interfaced circuits. All mated cable connectors, and cables if possible, shall be secured to avoid any strain on the circuit connections.

a. MDS Frames. An ARTCC MDS 110 frame system holds 16 dual-connectorized, high density, punch-down terminal 110 blocks, eight each in the upper areas of the front and rear frame faces. Access to each terminal block is through the block's 12 dual connectors mounted as a connector group lower on the same frame face as the block. Other MDS frames hold jackfields to allow patching line and drop circuits as required and monitoring and testing internal and external circuits connected to the MDS.

b. MDS Blocks. MDS punch-down terminal 110 blocks and their dedicated connector groups both are numbered 1 through 16 and are mounted 1 - 8 on the frame front face and 9 - 16 on the rear face. The lowest block number, 1 or 9, is mounted upper left on each face. Blocks are mounted two to a row in four rows and in numerical sequence with odd numbered blocks on the left. Each high density 110 block contains 12 rows of 50 punch-down terminals per row (600 per block). Each block punch-down row is accessed through a 25-pair cable from the back of the block to its dedicated frame mounted dual connector.

c. Dual Connectors. An MDS block dual connector is two 50-conductor Amphenol-type connectors, one female and one male mounted back-to-back and wired in parallel. A dual connector provides access to a block punch-down terminal row for both an interface cable and an interconnect cable at the same time, if required. Dual connectors are frame mounted with female receptacles face up and male plugs face

down. All female Amphenol-type connectors have retaining clips to secure mated male connectors. The 12 dual connectors for each block are mounted as a connector group on the lower portion of each 110 frame face. Block connector groups are mounted in the same numerical order and arrangement as their blocks, in four rows with two connector groups per row consistently on each frame face.

d. Cable Connectors. ARTCC MDS interface and interconnect cables are 25-pair cables which are terminated in 50-pin Amphenol-type cable connectors.

(1) Male Cable Connectors. All male connectors shall have indentations to accept retaining clips while mated. Two 50-pin male cable connectors that have the correct indentations are TRW CINCH Part No. 77-72500-1 and AMP CHAMP Part No. 1-229912-1. The crimping tool for the TRW CINCH cable connector is Part No. SCT-332 and for the AMP CHAMP cable connector is Part No. 229378-1.

(2) Female Cable Connectors. All female connectors shall have retaining clips to secure their mated male connectors. Two 50-conductor female cable connectors that have retaining clips similar to those on 110 block female connectors are TRW CINCH Part No. 97-22500-91L and AMP CHAMP Part No. 554905-1. These female cable connectors, or equal, are required on all cables connected to MDS male 50-pin connectors.

224. INSTALLATION. The ARTCC MDS is installed in the communications equipment room in an accessible area. Its location must allow it to interface conveniently both with internal ARTCC voice frequency communications trunk IDFs and with all telecommunications circuits which exit from the ARTCC. The exact location and configuration of the MDS in an ARTCC is necessarily site specific depending upon the quantity and types of trunk interfaces needed at that ARTCC. Installation of all ARTCC frames, racks, cabinets, and cabling shall use the installation guidelines found earlier in this chapter.

a. MDS Frame Installation. MDS AT&T dual-connectorized 110 frames are installed resting on and bolted to the concrete floor below a raised floor. Horizontal bars on the outside of a 110 frame are bolted to the frame's corner vertical U-channels to further strengthen the frame. This type of installation provides the frame rigidity necessary to maintain required plumb and level alignment while supporting the weight of large numbers of 25-pair cables connected to the MDS frames from under floor or overhead runs and interconnections of twisted pair wires between frames. An MDS 110 frame can have

mounted up to 16 punch-down terminal 110 blocks and their 16 block dual connector groups, 8 each on each front and rear frame face.

b. MDS Rack Installation. Any rack used by the MDS and mounted on a raised floor shall be level, plumb, and square before being anchored to the raised floor. Metal washers may be used as shims to compensate for floor irregularities, but neither washers nor rack shall be allowed to make an electrical connection to any steel in the floor. After proper alignment, leveling, and stabilizing, each rack should be anchored to the floor at each of its four mounting points using caulking anchors (or equivalent) and 1/4 inch bolts with flat washers and lockwashers.

c. MDS 110 Terminal Blocks. Terminal blocks 1 through 8 (9 through 16) are installed on the frame upper front (back) face area. For consistency, blocks 1 and 9 always are mounted upper left on the frame front and rear faces. Blocks are mounted two per row in four rows and are numbered consecutively with odd numbered blocks on the left. A high density 110 block contains 12 rows of 50 punch-down terminals per row (600 per block). Each block punch-down row is connected by 25-pair cable through the back of the block to a dual connector for access to that row. A block's 12 dual connectors are mounted as a block connector group. Block connector groups are installed lower on the same faces as their blocks and are numbered and arranged the same as their blocks.

d. Dual Connectors. MDS dual connectors are two 50-pin Amphenol-type connectors, one female and one male mounted back-to-back and wired in parallel. A dual connector provides access to a block terminal row for both an interface cable and an interconnection cable at the same time. Dual connectors are mounted with female receptacles face up and back-to-back male plugs face down. Each female connector has retaining clips to hold securely by the shell a mated male connector. The 12 dual connectors for each block are mounted as a connector group on the lower portion of each 110 frame face. Block connector groups are mounted in the same numerical order and arrangement as their blocks, in four rows with two connector groups per row consistently on each frame face as shown in Figure 6-11, *110 Frame Connectors for Front Blocks 1-8*.

e. MDS Interface Cabling. Interface 25-pair cables either are routed under a raised floor to the MDS and extend up through the centers of MDS frames or arrive in overhead cabletrays to extend down through the centers of MDS frames. Cable hooks mounted on the inside faces of the 110 frame corner U-channels can be used to support cables to relieve strain on the mated connectors. Cables are terminated in

50-pin male connectors to connect to the MDS frame mounted 50-receptacle female upward facing halves of the dual connectors. On the MDS, each male connector mated to a female connector must be secured by retaining clips provided by the female connector.

f. MDS Interconnection Wiring. For interconnections within the MDS when only one end is terminated in a 50-conductor cable connector, the cable wires on the other end are punched down directly onto a terminal block. Twisted wire pairs also can be used as required to interconnect circuits between MDS frames. Interconnecting cables terminated in female cable connectors which provide retaining clips to securely mate to male connectors may be utilized if necessary.

g. Shielding and Grounding. Shielding and grounding practices in FAA-STD-019 and FAA-STD-020 shall be followed in the installation of all MDS equipment and cabling. At all times, isolation shall be maintained between the ARTCC single point, multipoint, and AC protection grounding systems, except where they join on the ARTCC critical power vault ground plate/ bus or on the earth electrode ground system as described in Chapter 4.

225. MDS INTERFACES. All telecommunication circuits that exit from the ARTCC are interfaced through the MDS. Internal ARTCC systems that interface with the MDS shall be grouped according to the communication type and service required. Circuits should be installed in consistent channel order to facilitate testing and servicing when necessary.

a. External Line Interface. External landlines shall be kept segregated from internal lines in the ARTCC until an adequate transient protection circuit has been installed for each external wire and shield at its entry to the ARTCC MDS. Transient protection from lightning discharges is discussed in Chapter 4. Figure 4-28, *Landline Protection Circuit Assembly Installation*, shows landlines entering through conduit into a lightning protection box, but the box could be replaced by an MDS rack or frame. The landline overall shield is grounded to the ARTCC multipoint ground, an isolated bus bar A shunts transients directly to the ARTCC earth electrode system ground, and isolated bus bar B grounds signal pair shields to the ARTCC single point ground.

b. ARTCC Interface Connections. ARTCC system internal circuits that interface with the MDS arrive at the MDS grouped according to purpose or type, such as M/S A/G radio, BUEC radio, PABX, other G/G tielines, or RCL. The number of terminal blocks and connectors used for a system depends upon the quantity of wires per circuit and the number of circuits required to be accommodated. Each ARTCC must

satisfy its own circuit requirements. For example, only every other connector in a block connector group can be utilized to reduce the size of the interface cable groups, but this should be done consistently for that one system to avoid confusion with circuit continuity.

226.-232. RESERVED.

SECTION 6. A/G GROUND RADIO CONTROL SYSTEMS

233. GENERAL. AT controllers utilize radio control equipment (RCE) to select and operate analog A/G ground radios located at RCAG and sustaining S-BUEC sites. RCE units accept both analog voice and radio control signals from AT controllers or analog voice from pilots and RCAG status data. An RCE unit accepts and outputs analog signals, but processes data digitally. ARTCC and RCAG modems transmit and receive voice and data signals in separate parts of the audio frequency band. The communication link between a control RCE unit in an ARTCC and a remote RCE unit in an RCAG normally requires four-wire voice grade telephone lines for main/standby VHF/UHF redundancy and requires a link bandwidth of at least 300 Hz to 3000 Hz. Also, RCL microwave links may be utilized between ARTCCs and RCAGs.

a. Control Function. Control signals initiated by AT controllers in an ARTCC are routed through a VSCS to voltage signal interfaces connected to ARTCC RCE units. Each RCE unit modulates its own controller's signals on a separate carrier at 2880 Hz, above the voice frequencies in the audio band, for transmission to remote radio sites. These signals select VHF or UHF main/standby or BUEC A/G transmitters and receivers, relay controller PTT signals, and control muting.

b. Maintenance Monitoring. Remote facility RCE units can provide status data from their remote A/G ground radio site. Through remote and ARTCC RCE units, an ARTCC RMMS could monitor some status in the A/G radio facility. Early detection of potential site problems or an equipment failure can minimize or prevent disruption of A/G communications. The status of RCE units and A/G channels now is monitored separately by the RCE manufacturer's own monitor system.

234. EQUIPMENT CONFIGURATION. RCE units receive voice and data analog signals. In each RCE unit, analog signals are processed digitally and converted back to analog to interface with modems, analog A/G radios, or a VSCS. Each CSTI Control-RCE (C-RCE) unit has both a control voltage signal interface required by a VSCS and an audio signal interface with the VSCS. Some older Grim or Intelect RCE units required special VSCS interface cards because pin assignments varied between manufacturers and equipment models. Almost all Grim and Intelect RCE has been replaced with CSTI RCE, so only CSTI RCE will be described here.

a. CSTI RCE. Each CSTI Model CS-2330/RCE unit is configured as either a C-RCE unit or a Remote-RCE (R-RCE) unit. In addition to an audio signal interface, CSTI Type B C-RCE units have a voltage signal interface required by the VSCS in order to exchange radio control

signals between an ARTCC and RCAG or remote S-BUEC site. Each VSCS voltage relay interface controls one voice channel path through a dedicated pair of C-RCE and R-RCE units that exchange control signals and confirmations governing A/G radio operation. R-RCE units are installed in remote A/G ground radio sites to interface with analog A/G transmitters and receivers. The same model data voice card (DVC) is installed in both control and remote CSTI RCE units. A CSTI RCE rackmount dual channel enclosure (DCE) can house two DVCs for dual channel operation or one DVC and one jack interface card (JIC).

b. C-RCE Assembly. The CSTI C-RCE assembly contains a power factor corrected AC/DC power supply and an internal cooling fan. In order to interface with the VSCS, the ARTCC CSTI RCE maintenance data terminal (MDT) must define firmware in each ARTCC C-RCE unit as a Type B C-RCE interface to enable the voltage signal interface in each C-RCE unit as required by the VSCS. Each C-RCE unit requires a rear mounted P1 Type B/C signal interface cable (SIC) assembly. See cable part numbers in Figure 6-22, *Signal Interface Cables (SIC) for CSTI RCE Units*. In AFSS or airport terminal control sites, a Type C C-RCE assembly includes a relay interface module (RIM) card which provides a contact relay closure interface required to interface with an Integrated Communications Switching System (ICSS).

c. R-RCE Assembly. The CSTI R-RCE assembly includes a commercial power supply and an additional DC/DC converter for site DC power conditioning. A jumper in an external cable assembly configures a DVC to operate as a remote unit, converting a C-RCE unit to an R-RCE unit. The external jumper is part of an R-RCE rear mounted P1 Type-R SIC assembly shown in Figure 6-22. The jumpered SIC must be connected to the RCE for the RCE to function as a remote unit.

d. Centralized Maintenance System (CMS). The CSTI RCE system includes a CMS located at the control site to monitor the health of the CSTI RCE units. The CMS has a centralized maintenance terminal (CMT) which includes a workstation and one or more communication servers (CS). The CMS interfaces with C-RCE units to communicate with them and their dedicated R-RCE units. In the workstation, MDT software polls each RCE channel through a CS. An RCE channel is the communication circuit through one C-RCE to/from its dedicated R-RCE.

235. MATERIALS AND EQUIPMENT. All RCE assemblies are designed to mount in standard 19 inch equipment racks. However, CSTI assemblies can vary in physical design to accommodate channel requirements, so each assembly can require its own special cabling and complementary equipment.

FIGURE 6-22. SIGNAL INTERFACE CABLES (SIC) FOR CSTI RCE UNITS

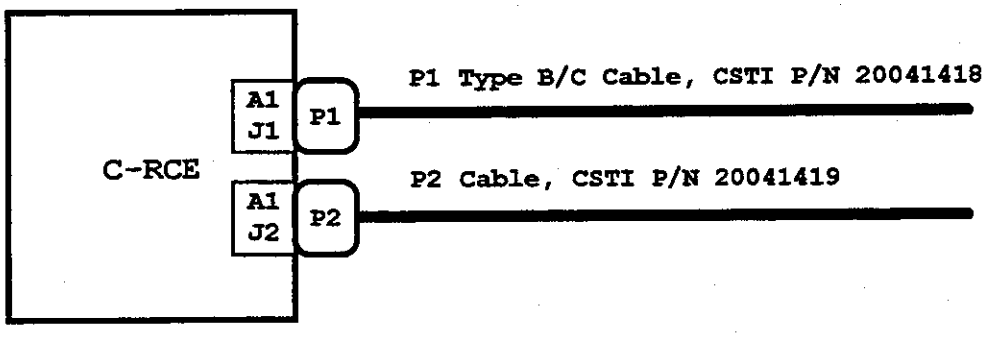

Signal Interface Cables for Control Site RCE

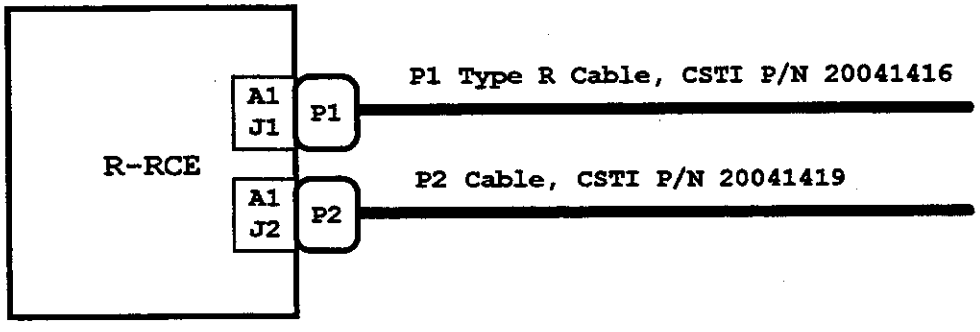

Signal Interface Cables for Remote Site RCE

a. CSTI RCE Assemblies. A CSTI single voice channel assembly, C-RCE or R-RCE, resides in a DCE rackmount chassis. A C-RCE assembly normally contains one DVC and a RIM, but can house two DVCs to control radio equipment at separate sites. Figure 6-23, *CSTI C-RCE Subassembly Block diagram,* shows equipment connections for one DVC and a RIM. Figure 6-24, *CSTI R-RCE Subassembly Block diagram,* shows equipment connections for an R-RCE.

b. Data Voice Card (DVC). One or two DVCs may be installed in a C-RCE assembly, but only one in an R-RCE assembly. A DVC includes a digital signal processor (DSP), memory, and interface circuits. The front panel of a DVC contains the following indicators, controls, and drop line access: 16 LEDs to display status of power, selected radios, and the DVC; 5 three position toggle switches to select main/standby radios or maintenance mode; and 8 monitor jacks to access drop lines.

(1) C-RCE Assembly. A type B C-RCE, used in an ARTCC, has a voltage signal interface required by the VSCS. A Type C C-RCE has a Relay Interface Module (RIM) mounted as a daughter card on top of the DVC which is installed in a front slot of the chassis. A RIM contains dry reed relays for a Type C contact relay closure interface.

(2) R-RCE Assembly. On first power up, the DVC in the remote DCE reads whether or not a jumper has been installed in the CSTI P1 Type R cable assembly attached to its A1J1 port. The jumper configures the DVC as a remote DVC (RDV). If the DVC finds the jumper installed, it adopts remote operation as an RDV which is required for an R-RCE.

c. Jack Interface Card (JIC). The JIC is mounted in a CSTI DCE in the front lower slot, below the DVC. DVC headers are connected to JIC headers by ribbon cables. The JIC provides monitor jacks to access voice and telephone signals on the DVC.

d. Dual Channel Enclosure (DCE). A CSTI DCE chassis supports two front panel slots for installing either two DVCs or one JIC and one DVC which can contain a RIM where a Type C interface is required. The chassis occupies a shelf space 1-3/4 inches high, 8 inches deep, and 19 inches wide and is mounted in a 19 inch rack. A DCE has two versions, control DCE (C-DCE) or remote DCE (R-DCE), depending upon the power supply installed.

(1) DCE Power Supplies. The C-DCE for a C-RCE assembly has a power factor corrected AC/DC power supply used to reduce noise to the AC source. The R-DCE for an R-RCE assembly has a COTS AC/DC open frame power supply and uses a DC/DC power conditioner to maintain a

FIGURE 6-23. CSTI C-RCE SUBASSEMBLY BLOCK DIAGRAM

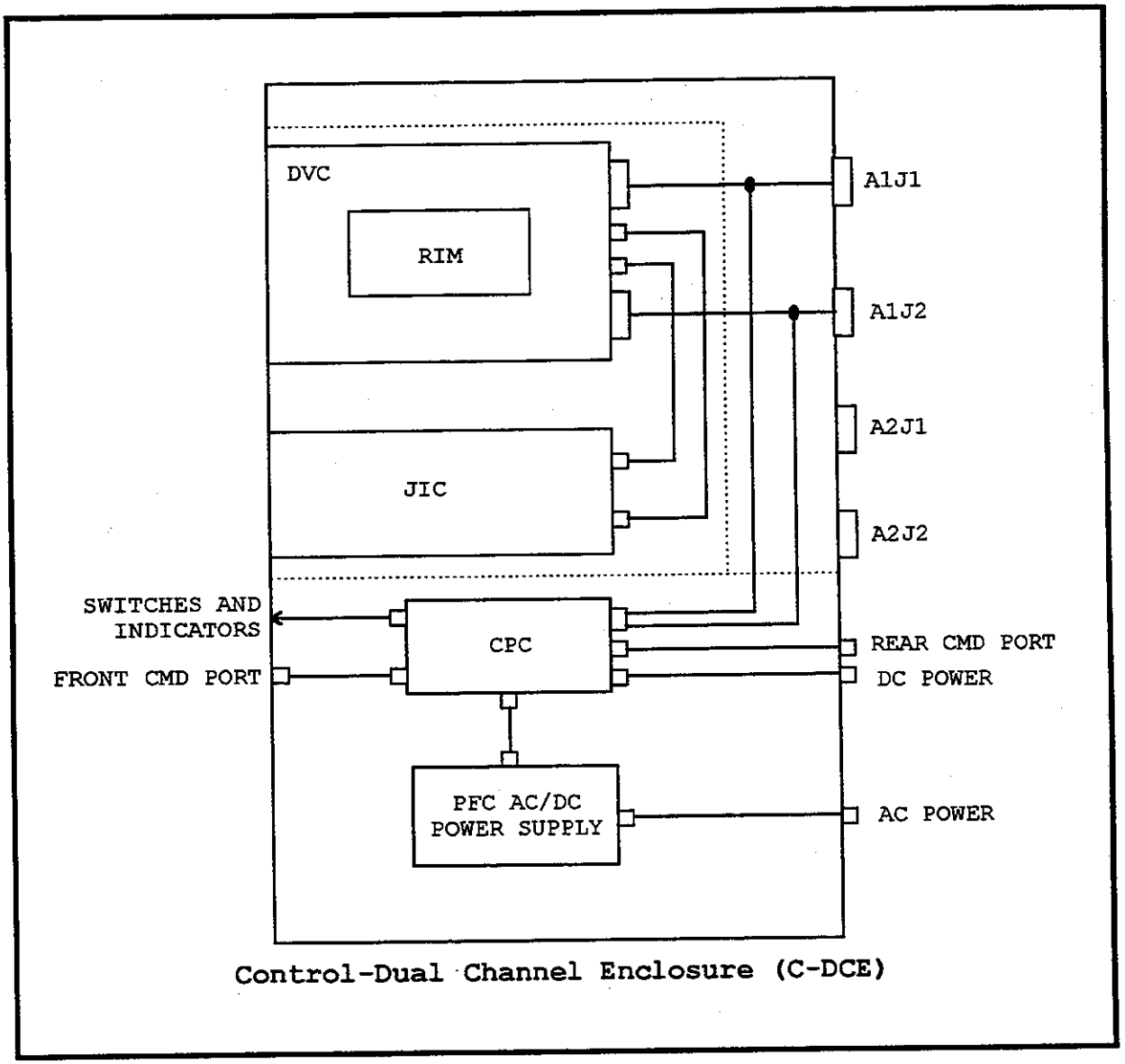

FIGURE 6-24. CSTI R-RCE SUBASSEMBLY BLOCK DIAGRAM

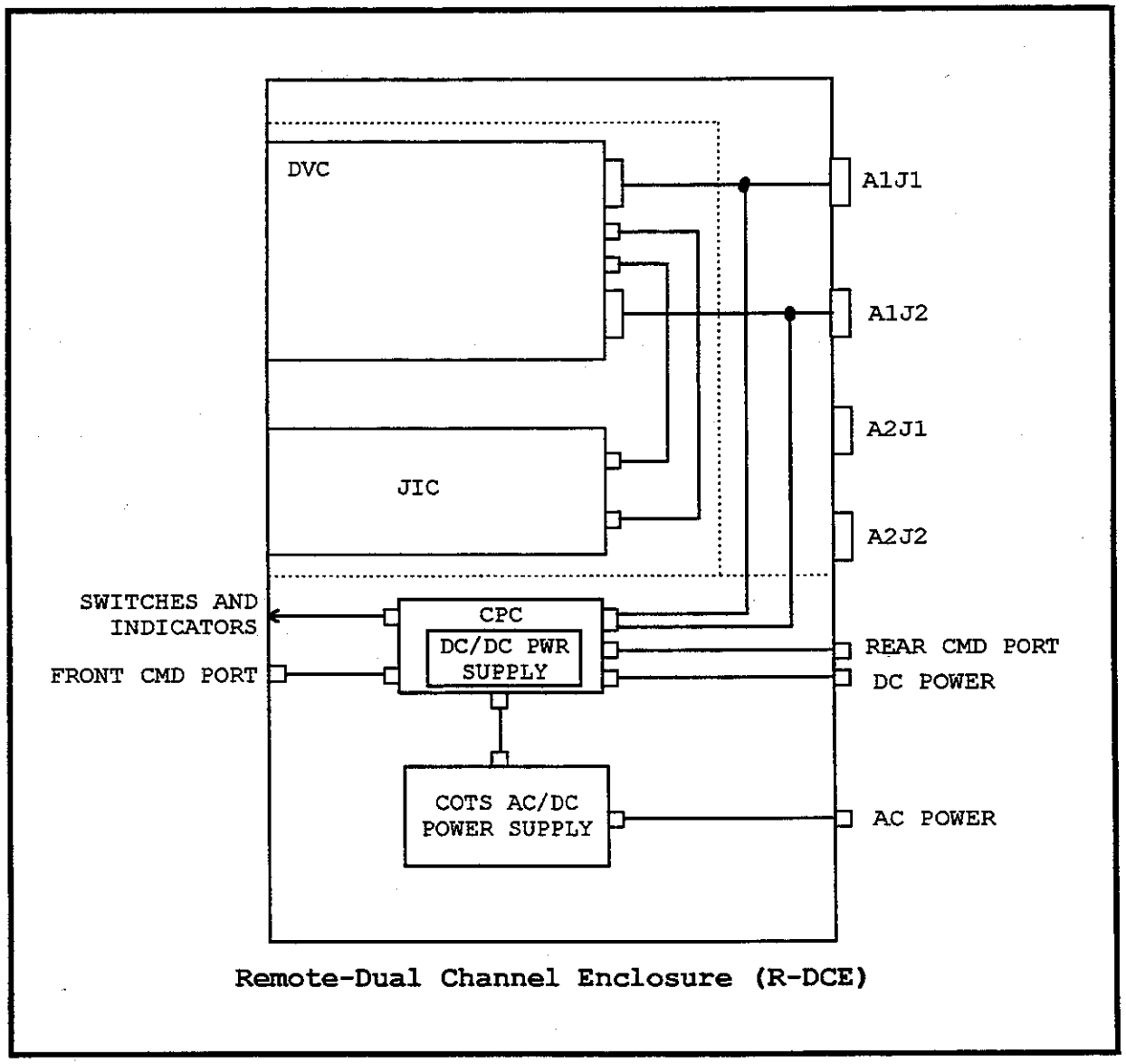

stable DC voltage level. A Communication and Power Card (CPC) routes separately the +24 VDC from a DCE AC/DC power supply and +24 VDC from a secondary DC power source if available. The DVC furnishes both DC voltages to a diode OR circuit to provide uninterrupted DC voltage if one source fails.

(2) Communication and Power Card (CPC), CPC-001 & CPC-002. The CPC drives DCE front panel workstation interface controls and power indicators and routes selected signals and DC power to the DVC. CPC-001 is a standard version for a C-DCE. CPC-002 contains an added DC/DC power conditioner for the R-DCE to maintain a uniform +24 VDC for the antenna transfer relay even if site battery voltage drops.

e. Centralized Maintenance System (CMS). The CSTI CMS includes a CMT as the user interface and alarm monitor, an Ethernet LAN, and one or more LAN connected CSs. Each CS consists of a Communication Server Station (CSS), which is a separate computer, and up to four Communication Server Interface Units (CSIU). Each CSS computer can provide required software and gather RCE status data by polling the units in the connected RCE channels. CSIUs in a CS are serially connected (daisy chained) to the CSS. Each CSIU also has two serial RCE communication ports which can connect to up to 8 daisy chained C-RCE units per port. A CSS furnishes power for its first two CSIUs only. Therefore for the third and fourth CSIUs in a CS, a separate dedicated power supply is required for each. Typical connections for a CMS are shown in Figure 6-25, *CSTI Centralized Maintenance System (CMS) Block Diagram*.

236. INSTALLATION. Installation of racks, cabinets, and cabling in an ARTCC shall use the installation guidelines found earlier in this chapter. Guidelines for installation in an RCAG are found in FAA Order 6580.3A, *Remote Communications Facilities Installation Standards Handbook*.

a. Grounding Connections. No RCE connection to the ARTCC multipoint ground system, single point ground system, or AC protection ground system shall provide a cross-connect between any of these separate ground systems. Before installation of RCE equipment, any existing ground which cross-connects two of the ground systems, except in the ARTCC critical power vault or on the buried earth electrode ground system, shall be removed and the disconnected ground be connected to the correct ground system. Grounding is described in chapters 4 and 5 of this order.

b. Rack Mounted RCE. RCE shelf assemblies mount in standard 19 inch racks or cabinets. The number of racks required per site depends

FIGURE 6-25. CSTI CENTRALIZED MAINTENANCE SYSTEM (CMS) BLOCK DIAGRAM

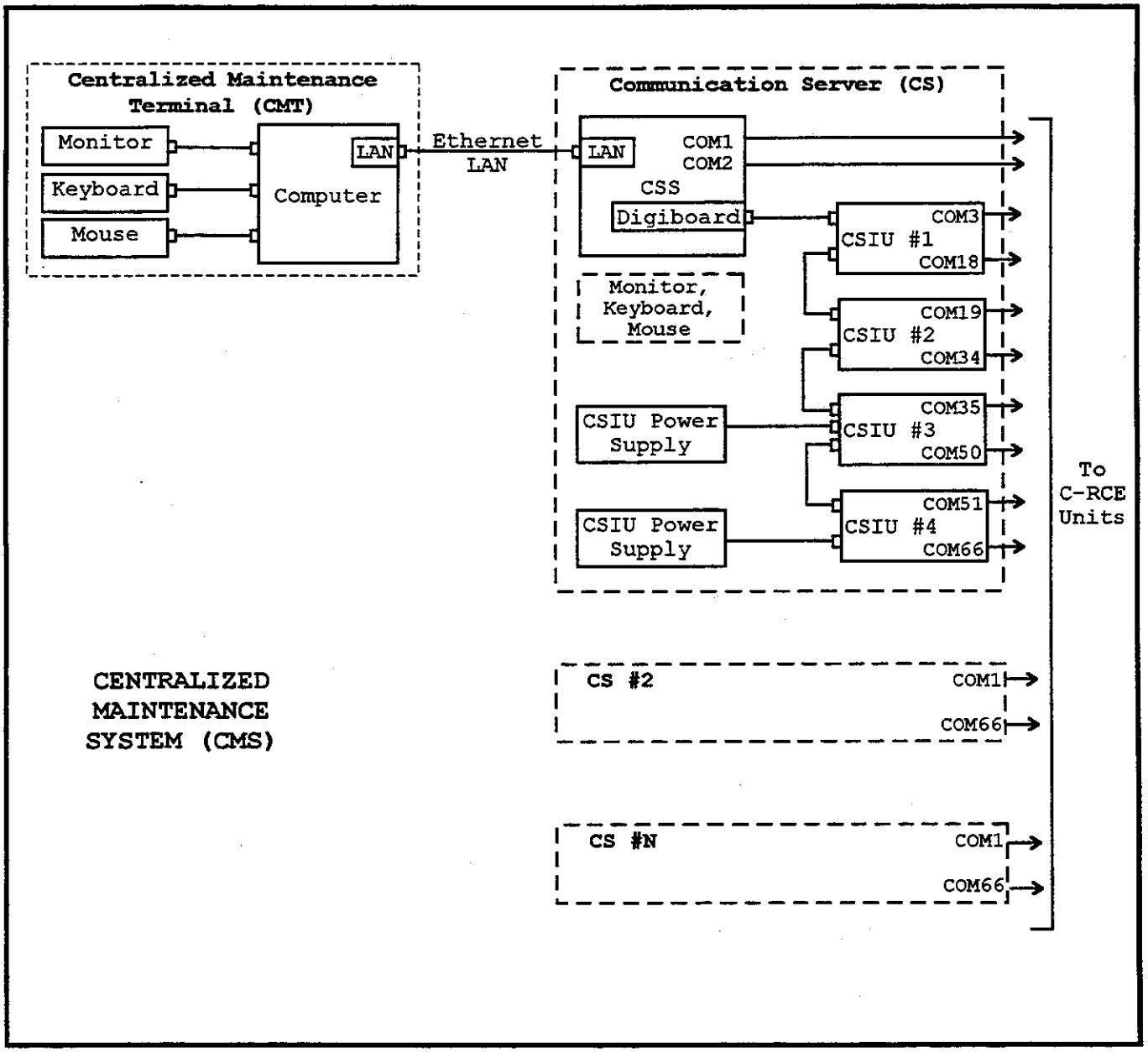

upon the number of radio channels plus spare channels required and upon which configuration is in use. For proper operation, equipment must be configured and installed in accordance with the manufacturer's instructions for its intended use.

c. Ventilation Requirement. A rack fan is often mounted in the top of an RCE populated cabinet to remove excess heat by pulling cooler air up through the cabinet and blowing the heated air out the top. Adequate air flow through a rack prevents overheating of RCE rackmounted assemblies. Extreme or prolonged high heat can shorten or destroy the life of equipment components, which can result in ATC voice channel disruption and require extra maintenance. Empty space left between shelves may reduce some heat transfer between shelves, but spacing is not a substitute for adequate air flow up through a rack containing one or more high heat producing shelves.

d. Uniform Arrangement. RCE assemblies shall be arranged uniformly in each rack for consistency. Both uniform arrangement of rack mounted equipment and standardized circuit routing can facilitate reading of rack displays, circuit tracing, and performing maintenance necessary to avoid or minimize circuit interruption. Racks should be grouped uniformly, according to use and function, considering required audio channel and radio control interfacing, alarm reporting, and equipment maintenance monitoring networks.

237. RADIO CONTROL EQUIPMENT (RCE) INTERFACES. In an ARTCC, each control RCE assembly must interface with the VSCS through an analog audio interface for transmit and receive voice and also through an analog voltage signal interface for outgoing A/G ground radio control and received status information. In an RCAG, each remote RCE assembly provides voice to and from its A/G ground radios through an analog audio interface and provides signals to control UHF/VHF PTT keying and to select main or standby transmitters and receivers through an analog voltage signal interface. Each control or remote RCE assembly also has an analog audio interface for at least one 4-wire voice grade telephone line trunk for communications between the ARTCC and an RCAG.

a. CSTI C-RCE Interfaces. The CSTI C-RCE Type B interface is the factory provided default control and status signal interface. A Type B C-RCE assembly has a Type B interface to accommodate analog voltage signal levels required to interface with a VSCS in an ARTCC and separate analog audio signal interfaces to the VSCS and to telephone trunks.

b. Equipment Audio Interfaces. A CSTI RCE assembly can support up to four 4-wire audio interfaces with its site equipment. The site

equipment can be either a VSCS at the control end or up to four sets of radios at the remote end. Each audio interface carries transmit and receive voice traffic. In a single controller RCE primary/backup installation, only one audio interface on the C-RCE is required to interface with the VSCS. All four audio interfaces in a remote RCE (R-RCE) assembly are used to accommodate the selected pair of UHF or VHF, main or standby radios at one remote site.

c. Telephone Trunk Interfaces. Each of the two P2 interface ports on a CSTI RCE assembly can support two primary/backup audio signal telephone trunks. However, specific software must be installed in each assembly to support the use of its telephone trunk interfaces for normal primary/backup radio channel operation or for special case dual control sites or separated transmitter and receiver sites.

(1) Primary/Backup Mode. Normally only one P2 port on each RCE assembly is required to provide a telephone trunk interface for a pair of CSTI C-RCE and R-RCE assemblies. Voice and control signals combined for audio band transmission are interfaced to a primary 4-wire telephone trunk connecting the two assemblies. A second trunk interface on each of the same P2 ports can be used to provide a backup telephone trunk between the sites in case of primary trunk failure. Automatic switching between primary and backup trunks in the event of a failure is an option available only for CSTI RCE primary/backup mode operation.

(2) Separated Transmitters and Receivers. Connection of telephone trunk interfaces to both P2 ports on a C-RCE assembly, for one radio channel, can provide control and voice signals to a channel transmitter at a site located remote from the channel receiver. Such a separated transmitter and receiver pair are controlled by the C-RCE through two R-RCE assemblies, one of which is located at each of the two separate remote sites to interface with the channel transmitter or receiver.

(3) Dual Control Sites. On an R-RCE assembly, use of both telephone trunk P2 ports allows the R-RCE to receive control signals and voice from each of two separated controller positions through two different C-RCE assemblies. Each of the two controller positions must use a separate C-RCE assembly to provide the dual control of one R-RCE assembly.

d. Signal Cables. Two versions of P1 cables connect site equipment with radio control and voice interfaces on CSTI RCE assemblies. Control and remote sites have different control signal interface requirements. To accommodate this difference, a P1-Type B/C

cable connects to the C-RCE A1J1 connector, as shown in Figure 6-22, and a P1-Type R cable connects to the R-RCE A1J1 connector. Also, the P1-Type R cable contains the remote site selection jumper option. Comparison of Figure 6-26, *CSTI Type B C-RCE Signal Interfaces*, and Figure 6-27, *CSTI R-RCE Signal Interfaces*, shows the different control and remote site interface requirements. For each CSTI RCE assembly, the P2 cable contains four pairs of conductors to access two 4-wire telephone trunks for channel primary/backup connections between sites.

e. RCE Input/Output Connectors. Four 96-pin high density connectors are provided on the rear panel of each CSTI RCE assembly. However in a typical primary/backup installation, only the top two connectors are used to interface to the VSCS at the control site or to the radios at the remote site. Each CSTI RCE assembly also has a DB9 connector on each front and rear panel to provide access for the CSTI maintenance data terminal (MDT). The MDT configures each assembly for required operation and audio levels and for specific use of its interfaces using software stored in the RCE assembly.

238.-244. RESERVED.

FIGURE 6-26. CSTI TYPE B C-RCE SIGNAL INTERFACES

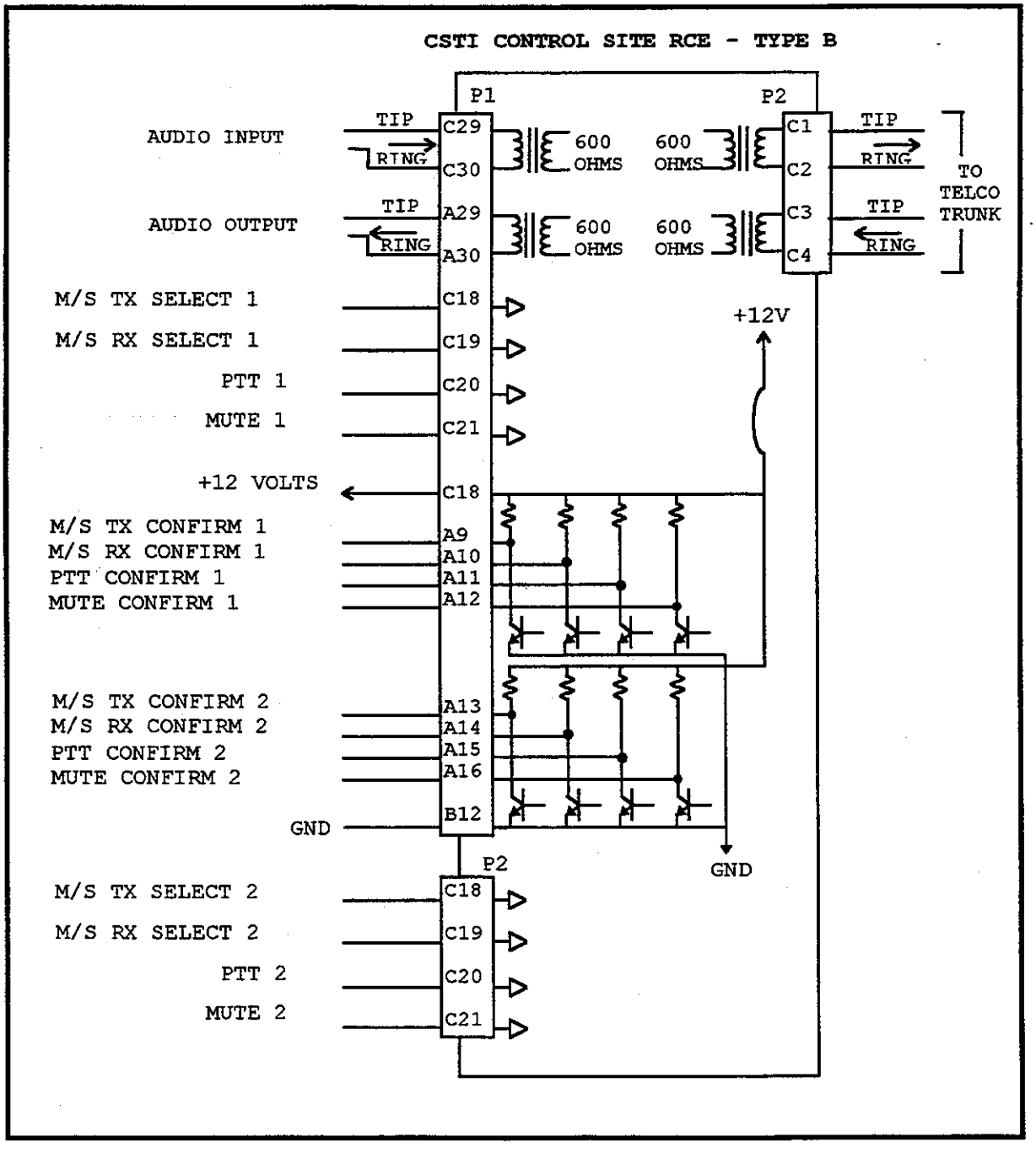

FIGURE 6-27. CSTI R-RCE SIGNAL INTERFACES

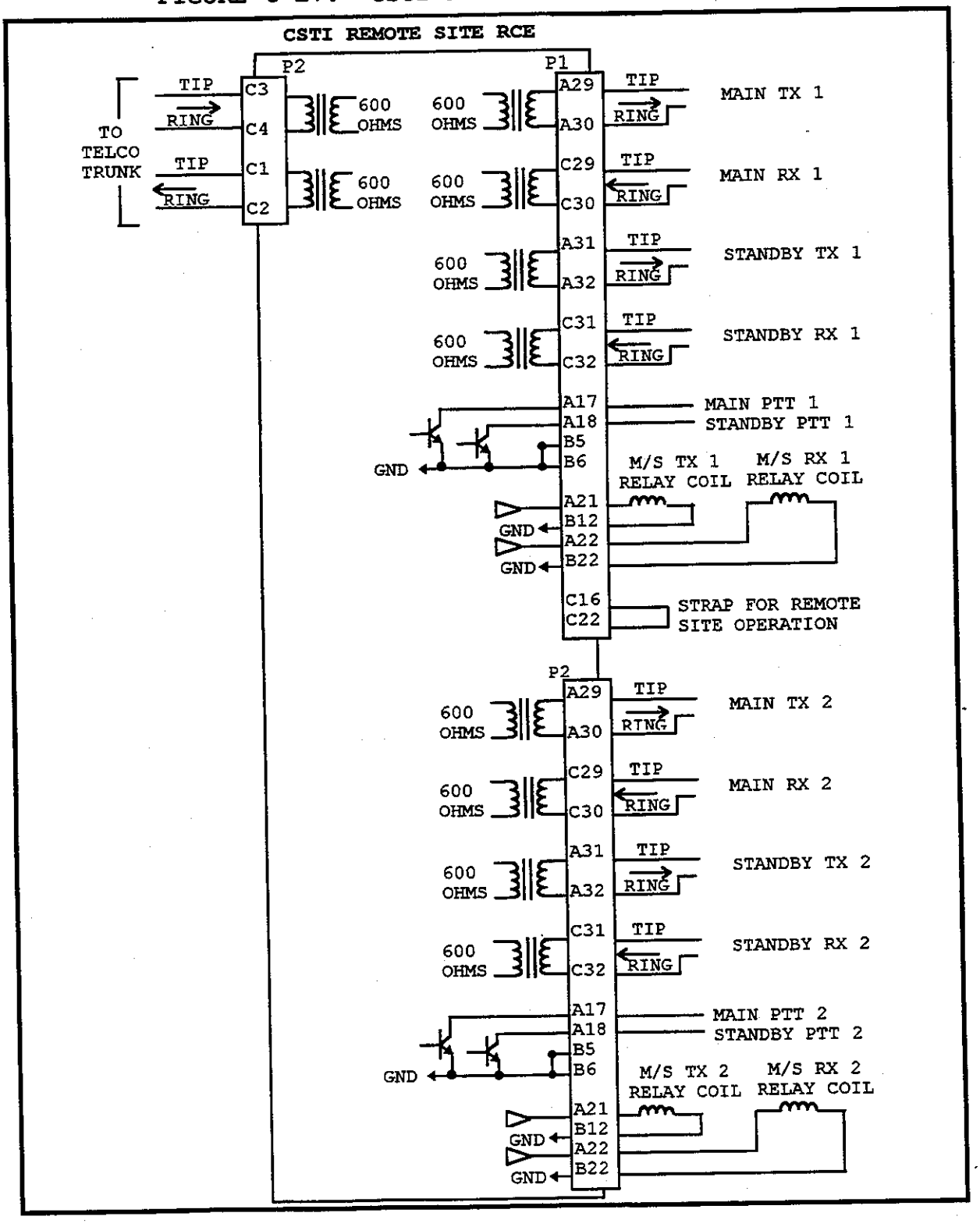

SECTION 7. REMOTE MAINTENANCE MONITORING SYSTEM (RMMS)

245. GENERAL. Each Remote Maintenance Monitoring System (RMMS) is designed to automate status monitoring and control of remotely located subsystems and equipment. A monitored remote site requires remote monitoring subsystem (RMS) software to monitor sensors installed in site equipment. An RMMS can monitor equipment performance, report facility degradation and outages, and provide control, certification, and automated logging to aid configuration management. Depending upon RMS and sensor installation, parameters monitored can include operational status and performance of A/G channel, radar, and telephone equipment; building environmental status; back-up power generation equipment status; status of navigational aid service; telecommunications line status; and site security.

246. EQUIPMENT CONFIGURATION. Each ARTCC RMMS is controlled by a maintenance processor subsystem (MPS). The MPS, a maintenance data terminal (MDT) console, and a system printer are located together in a maintenance control center (MCC). The MPS interfaces with modems to receive remotely monitored data and to exchange data. The MPS can monitor and control status at remote sites such as air route surveillance radars (ARSR) and RCAGs if sites are equipped for RMMS. Through modems and unique RMM reporting systems, such as RCE, airport RMS (ARMS), and environmental RMS (ERMS), RMMS data is transferred over radio communication links (RCLs) or telephone lines or through the peripheral adapter module remote interface (PAMRI), which is interfaced to the ARTCC HOST central computer complex (CCCH). Indirectly through the CCCH and VSCS, the MPS can monitor the status of ARTCC VSCS hardware and software, external telephone line interfaces, and AT controller positions.

247. MATERIALS AND EQUIPMENT. The RMMS is a distributed system whose MPS can be accessed by three types of MDT microprocessor-based maintenance terminals. These terminal types are fixed MDT (FMDT), transportable MDT (TMDT), and portable MDT (PMDT). All three MDT types are compatible with RMMS hardware and software and each has a Centronics-compatible parallel printer interface port. Each FMDT has a collocated printer.

a. Maintenance Processor Subsystem (MPS). The MPS in an ARTCC RMMS contains maintenance management system (MMS) software and either monitor and control software (MCS) or interim monitor and control software (IMCS). The MPS is accessible from its MDTs by direct cabling in the MCC or through modems and telephone lines or RCLs from remote locations. An ARTCC RMMS MPS communicates with an RMMS MPS in another facility through dedicated data multiplexing network (DMN)

circuits or through unique systems, such as for an RCE concentrator or for a Remote Maintenance VORTAC Concentrator (RMVC) transferring data from VOR, DME, TACAN, and LORAN-C sites.

b. Maintenance Data Terminal (MDT). FMDTs are desk-top terminals installed at fixed positions. One or more FMDTs are located at the MDT console in the MCC and are cabled directly to the MPS for system management use as well as remote monitoring and control. Except at the MCC, each FMDT printer is cabled to its FMDT. FMDTs in remote facilities communicate with the MPS using dedicated DMN circuits. TMDTs are initial MDT procurement suitcase size transportable computers for remote position use and for FMDT back-up. PMDTs are newer portable laptop computers for use at remote sites and have built-in modems for access to the MPS via the public switched telephone network (PSTN).

c. Printers. The RMMS printer in the MCC is the system printer for the MPS. It interfaces directly with the MPS through an RS-232-C cable and is located near the ARTCC MDT console. Other printers remote from the MPS cabled directly to FMDTs receive communications from the MPS through the FMDT modems interfaced to telephone lines.

d. Independent RCE System Monitor. Independent from any RMMS, the RCE system monitor separately monitors RCE units and certain A/G communication equipment parameters at RCAGs. RCE equipment in an RCAG reports status of a few parameters in each A/G channel to alert ARTCC personnel of possible channel equipment problems at an RCAG. Voltage levels activate relays whose status is polled by the ARTCC RCE system monitor. RCE system monitor data can be accessed by maintenance technicians and can trigger visual alarms in the ARTCC and in an RCAG to help pinpoint equipment problems. RCE status and control data is transmitted in the audio band with A/G voice communications.

248. INSTALLATION. The RMMS MDT console and RMMS system printer are located near each other in the ARTCC MCC. The length of RS-232-C cable from the MPS to the RMMS system printer is site specific. The length of 20 milliampere (mA) current loop cable connecting the MDT console FMDT to the MPS is also site specific.

a. Other MDT Cabling. Cables connecting the MDT processor to its display or to its keyboard are each limited to 3 feet maximum length. A telephone cable connecting the internal modem in any MDT to a phone jack is limited to 25 feet maximum length.

b. Non-MPS Position Cabling. Each FMDT located remote from the MPS has its own printer. The cable from the FMDT Centronics parallel interface port to its printer is limited to 10 feet maximum length.

249. INTERFACE. The RMMS MPS is connected directly to the RMMS MDT console FMDT through a 20 mA current loop cable. The RMMS system printer is connected directly to the MPS by an RS-232-C cable. The MPS also is interfaced directly to modems through telephone cable jacks. Some modems interface with the ARTCC PAMRI, which is connected to the ARTCC CCCH. Other modems interface with the RCL or telephone lines to monitor remote en route communication or data sites.

250.-255. RESERVED.

SECTION 8. TELECOMMUNICATIONS

256. ARTCC INSTALLED EQUIPMENT. Telecommunications equipment used directly by ARTCC personnel includes ATC position VSCS console equipment (VCE) and supervisory and maintenance position equipment. Other ARTCC equipment used in support of voice or data interfacility telecommunications includes modems and RCE; PAMRI equipment; NADIN, DMN, satellite, and RCL network equipment; multiplexing equipment; and ARTCC Demarc line terminating equipment. In Figure 6-28, *ARTCC Communications Overview*, typical internal and external communications exchanges with ARTCC equipment are indicated.

a. ATC Position Equipment. Telecommunications equipment plugged into each VSCS ATC position includes audio headset/handsets (Hs) and push-to-talk (PTT) hand and foot operated switches for controller use of the A/G voice channel. Integral features built into each VSCS ATC position console include A/G radio selection and audio control push buttons and switches, loudspeakers (Ls), preassigned direct access telephone call push buttons, and a VSCS indirect access general use keypad (VIK). The VSCS display module (VDM) in each ATC position console contains an interactive video monitor with an infrared touch entry device (TED) interface. The TED is used to initiate communication paths to connect the position console with A/G and G/G channel equipment.

(1) General. The telephone equipment at each ATC position supports ATC A/G circuits to RCAG and BUEC sites, Intercom (IC) intrafacility calls between positions within the ARTCC, Interphone (IP) interfacility calls between ATC facilities, and switched telephone service.

(2) Equipment Configuration. Routing of ATC A/G calls through the VSCS A/G digital switch and of ATC IC and IP calls through the VSCS G/G digital switch is programmed into the VSCS. With authorization, automatic reconfiguration of A/G circuits or position console responsibilities can be reprogrammed and activated from a supervisory position to accommodate changed ATC requirements. Two separate sets of ATC equipment are provided at each ATC position console to accommodate separated or combined controller functions.

(a) VIK. The dual mode (digit collection or message) VIK has a standard illuminated numeric keypad with three function keys and an LED message display of two 16 character rows. In digit mode, the VIK accepts and displays IC and IP phone numbers and special function numbers entered by the user. In message mode, it displays system messages for the user.

FIGURE 6-28. ARTCC COMMUNICATIONS OVERVIEW

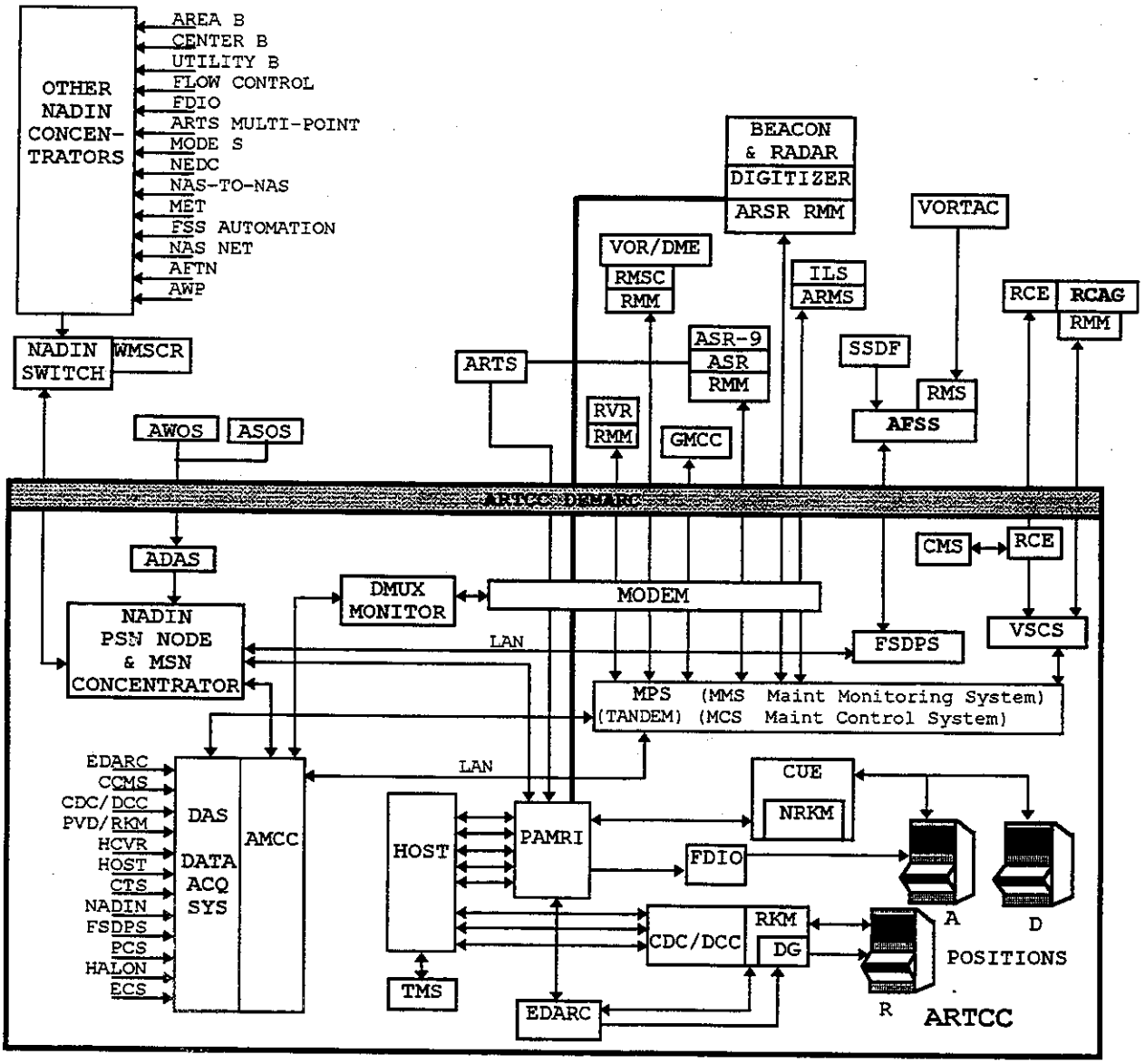

ADAS	Automated Data Acquisition System
AMCC	ARTCC Maintenance Control Center
CDC	Computer Display Channel
CMS	Centralized Maintenance System (RCE)
CUE	Computer Update Equipment
DCC	Display Channel Complex
DG	Data General
EDARC	Enhanced Direct Access Radar Channel
FDIO	Flight Data Input/Output
FSDPS	Flight Service Data Processing System
MPS	Maintenance Processor Subsystem
NADIN	National Airspace Data Interchange Network
NRKM	Non-Radar Keyboard Multiplexer
PAMRI	Peripheral Adapter Module Remote Interface
RKM	Radar Keyboard Multiplexer
TMS	Traffic Management System
VSCS	Voice Switching & Control System

(b) VDM. Each VDM contains an interactive color display. The TED interface mounted on the display provides the controller with data entry functions to support A/G and G/G channel initiation requests and to supply channel equipment status.

(c) Loudspeaker (LS) Modules. Two LSs are provided at each ATC position to accommodate G/G and A/G audio separately. The VSCS G/G LS module includes an LS, volume controls for the LS, two HSs, a chime, and an on/off control and LED status indicator for the chime. The VSCS A/G LS module is the same as the G/G LS module except that the A/G module does not include a chime, chime controls, or chime status indicator. The A/G LS volume controls apply only to the A/G LS and the two HSs designated A1 and A2 in the position dual jack module (DJM).

(3) Interface. At least one HS must be connected to a position console to activate its equipment. The VSCS equipment module (VEM) supports all software and physical interfaces for VSCS console equipment (VCE). Each HS combination requires a 6-wire interface to accommodate voice communications.

b. Supervisory and Maintenance Positions. All ATC supervisory and maintenance positions include telephone equipment with access via the VSCS to IC, IP, and switched telephone services as required.

c. NADIN MSN Concentrator and PSN Node. The National Airspace Data Interchange Network (NADIN) has two Network Control Centers (NCCs), in Atlanta and Salt Lake City, which monitor and control the two NADIN systems, NADIN I and NADIN II. Each NCC contains a NADIN switch as a hub for a star configured NADIN I message switched network (MSN) and a node in the backbone trunk network of the NADIN II packet switched network (PSN). Each NCC also contains an MSN/PSN gateway to convert communications for transfer between the NADIN MSN and NADIN PSN as needed. As part of the NADIN system, each ARTCC contains a NADIN MSN (NADIN I) concentrator to access NADIN MSN messages, a NADIN PSN (NADIN II) backbone node to route node-to-node and access NADIN PSN messages, and a Remote User Monitor System (RUMS) switch and protocol analyzer used to locate and report faults in the system.

(1) General. NADIN store and forward message traffic includes aircraft traffic flow control data, Service B flight plan data, Service A weather data, radar reporting, and NAS network information. NADIN MSN messages include international exchanges of international flight plans and NOTAMS. NADIN MSN links are from NADIN switch-to-switch connecting the two NCCs, NADIN switch-to-concentrator at each ARTCC or Combined Center Radar Approach Control (CERAP), and

NADIN concentrator-to-user. The NADIN PSN provides host-to-host, host-to/from-terminal (data circuit terminating equipment (DCE)), and DCE-to-DCE links for users. Each NADIN PSN backbone node requires links with at least two other PSN nodes to provide path diversity. The PSN backbone network also uses geosynchronous satellite circuits in conjunction with terrestrial and microwave circuits to augment the NADIN system.

(2) Equipment Configuration. Within each ARTCC, a NADIN MSN concentrator communicates with other ARTCC equipment including the Automated Data Acquisition System (ADAS) to receive AWOS and ASOS data; the FSDPS to exchange aircraft position, weather information, and flight plan data; the ARTCC maintenance and control center (AMCC) to exchange RMMS data; and the PAMRI to exchange data with the CCCH and ATC console positions. ARTCC fully automated NADIN PSN backbone packet switching node equipment occupies two separate racks as shown in Figure 6-29, *ARTCC Rack Elevation for NADIN PSN Node*.

(3) Interface. For external transmissions, an ARTCC NADIN concentrator interfaces primarily with AT&T digital data service (DDS) links. NADIN PSN nodes are interfaced together over leased LINCS or equivalent channels using ITU-TSS (formerly CCITT) X.25 protocol. Data transfer between a PSN node and a user is by local cable or via modems over dedicated lines. Non-standard protocol asynchronous terminals are provided access to a PSN node through a protocol converter/packet assembler-disassembler (PAD). No dial-up modem access is allowed for security reasons.

d. Data Multiplexing Network (DMN) Node. The DMN is a deterministic time division multiplexed (DTDM) interfacility network which transmits multiple data circuits over a minimum number of discrete channels. It connects to a DMN node in each ARTCC and in certain other ATC facilities for user access and routing of data between facilities. The network also uses statistical time division multiplexing (STDM) to consolidate independent DMN data transmissions and to provide dynamic DMN load balancing on leased line or RCL backbone routes for more efficient use of channel capacity.

(1) General. The DMN organizes analog and digital data transmissions between ARTCC nodes and between each ARTCC and ARSRs, AFSSs, TRACONs, ATCTs, the WJHTC, general NAS sector offices (GNASs), and the Central Flow Control Facility (CFCF). Multiplexing is provided for long range radar data (RDAT), beacon data (BDAT), interfacility data (IDAT), traffic management systems (TMS) data, FSDPS Service A data, automated radar terminal system (ARTS) data, flight data input/output (FDIO) data, computer based instruction (CBI) data,

FIGURE 6-29. ARTCC RACK ELEVATION FOR NADIN PSN NODE

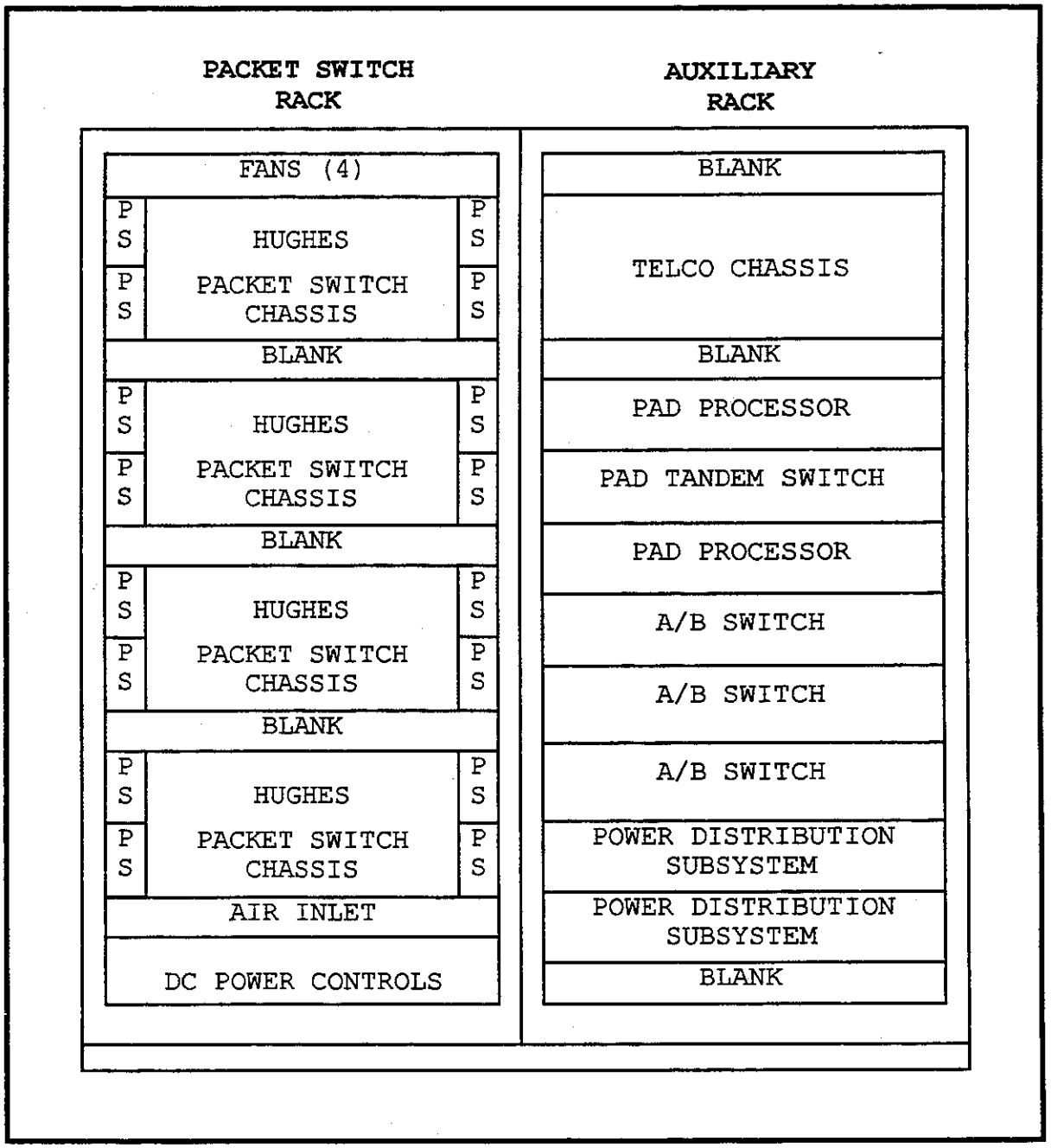

and RMMS data. Basic ARTCC DMN functions are shown in Figure 6-30, *Typical ARTCC Functional Diagram.*

(2) Equipment Configuration. Time division multiplexing (TDM) modems are required at each DMN node to provide user access to the network. A DMN ANMS at each ARTCC provides real-time system monitoring and control of its local and remote DMN hardware and circuits, including up to 8 RCL channels. DMN equipment is mainly COTS with the exception of the clock box and digital A/B switch which were developed for the STDM and DTDM systems to accommodate various data speeds. To increase system capacity and capability, Codex DTDM equipment is replacing original Paradyne DTDM equipment.

(a) Multiplexing Modems. DMN TDM multiplexing modems operate synchronously and have built-in remote diagnostic capability for use by the ANMS. DMN multiplexing modem speeds used commonly in ARTCCs are 19.2 kbps for analog and 56 kbps for digital data. Asynchronous dialup modems with lower speeds are used for special needs. In each ARTCC there is a data multiplexer (DMUX) and DMUX monitor. While monitoring modems, the DMUX monitor also supplies DMN status to the AMCC.

(b) Restoration Equipment. Dual Call/Auto Answer (DCAA) devices allow restoration of a dialed call in the event of a DMN transmission line failure. When the primary path fails, a fallback switch (FBS) automatically switches transmission to a secondary transmission path.

(c) Clock Box. A CODEX clock box is located at each ARSR or separate ATCBI site that contains a common digitizer (CD). The clock box provides clocking signals to the CD for synchronizing collected beacon and radar data. The clock box also provides timing to DMN modems for clocking transmission of RDAT to the ARTCC.

(d) ARTCC DMN System Elements. The main elements in an ARTCC DTDM Codex system are modems, high speed time division multiplexers (HSTDMs), A/B switches, patch panels, digital bridges, a central ANMS processor, the VF Demarc, and workstations. DMN systems also include channel service units (CSUs), data service units (DSUs), modem sharing devices (MSDs), port sharing devices (PSDs), and tail circuit synchronizers (TCSs) to synchronize timing from other data switching systems such as ATCBIs. Statistical time division multiplexing units provide efficient utilization of links as needed. Appendix 3 lists more details for equipment installed in ARTCCs.

FIGURE 6-30. TYPICAL ARTCC FUNCTIONAL DIAGRAM

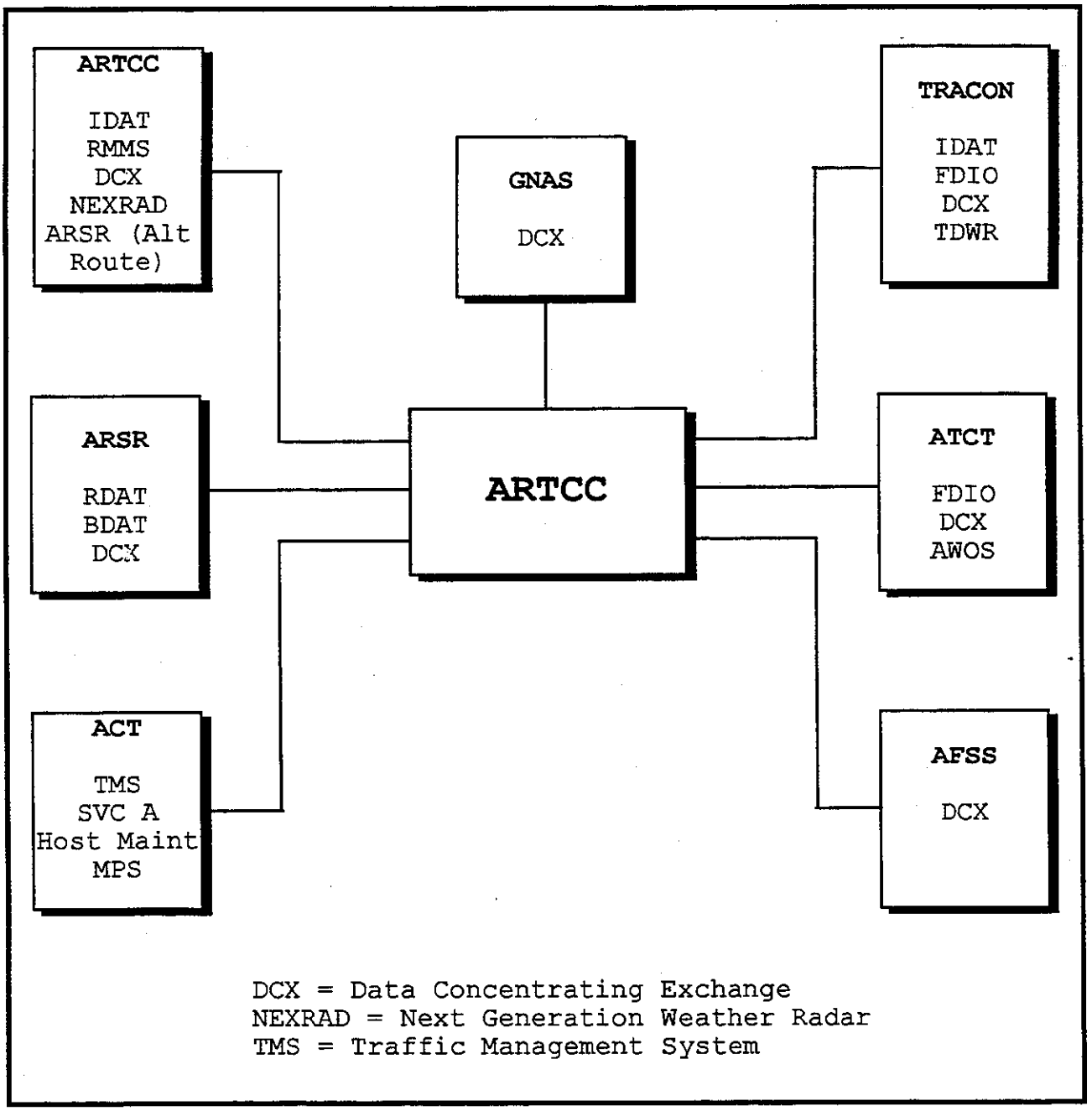

(3) Interface. Within an ARTCC, DMN modems interface with the PAMRI to exchange data with the CCCH and ATC console positions. All DTDM physical interfaces, except ANMS and CD timing, shall conform to RS-232 C or D and shall be convertible between RS-232 and EIA-530. The Codex network management system protocol for the DTDM system is open systems interconnection (OSI) compatible. DMN analog and digital data transmission equipment interfaces with at least voice grade-8 (VG-8), DS1 digital, or RCL channels for intersite transmissions. An example of DMN interfaces in an ARTCC is shown in Figure 6-31, *Typical ARTCC DMN Equipment Interfaces*. DMN Codex equipment also supports NADIN II and ALTE transmissions.

e. Ancillary Equipment. Ancillary telecommunications equipment in the ARTCC includes RCE and discrete modems which interface with telephone cables, patch panels, and multiplexers before communications reach the Telco Demarc or RCL radios and microwave transmission equipment to leave the ARTCC.

257. INTERFACILITY LINKS. ATC A/G circuits between an ARTCC and an RCAG normally are dedicated 4-wire telephone lines. IP interfacility calls use other dedicated lines. Public switched calls with an ARTCC use various external telecommunication links. Message and data transfers in support of ATC make use of telephone, RCL microwave, and LINCS circuits.

a. Radio Communications Link (RCL). The RCL backbone system is a high density, long haul, 8 GHz microwave communications network. Each CONUS ARTCC contains a node (point of user access) in the RCL backbone system to provide voice and data connectivity between ARTCCs and other major ATC facilities. A high density terminal includes a power bay, radio bay, and auxiliary bay. Figure 6-32, *High Density RCL Terminal Equipment Bay Configuration*, shows a typical configuration found in an ARTCC. Low density RCL (LDRCL) systems accommodate line-of-sight or short range analog voice or digital data links using other frequency bands. LDRCL systems provide user access and remote radar facility connectivity to ARTCCs through the backbone RCL system or provide separate stand alone point to point links to ARTCCs, ATCTs, AFSSs, or TRACONs.

(1) General. All RCL systems use COTS equipment designed for continuous operation. Each RCL microwave or UHF link contains two terminal stations, one at each end, both of which have insert/drop capability for user access. A link may include one or more repeater stations, with or without insert/drop capability. All radio equipment shall be configured for hot standby operation with fault sensing. Each channel shall be monitored for channel degradation and equipment

FIGURE 6-31. TYPICAL ARTCC DMN EQUIPMENT INTERFACES

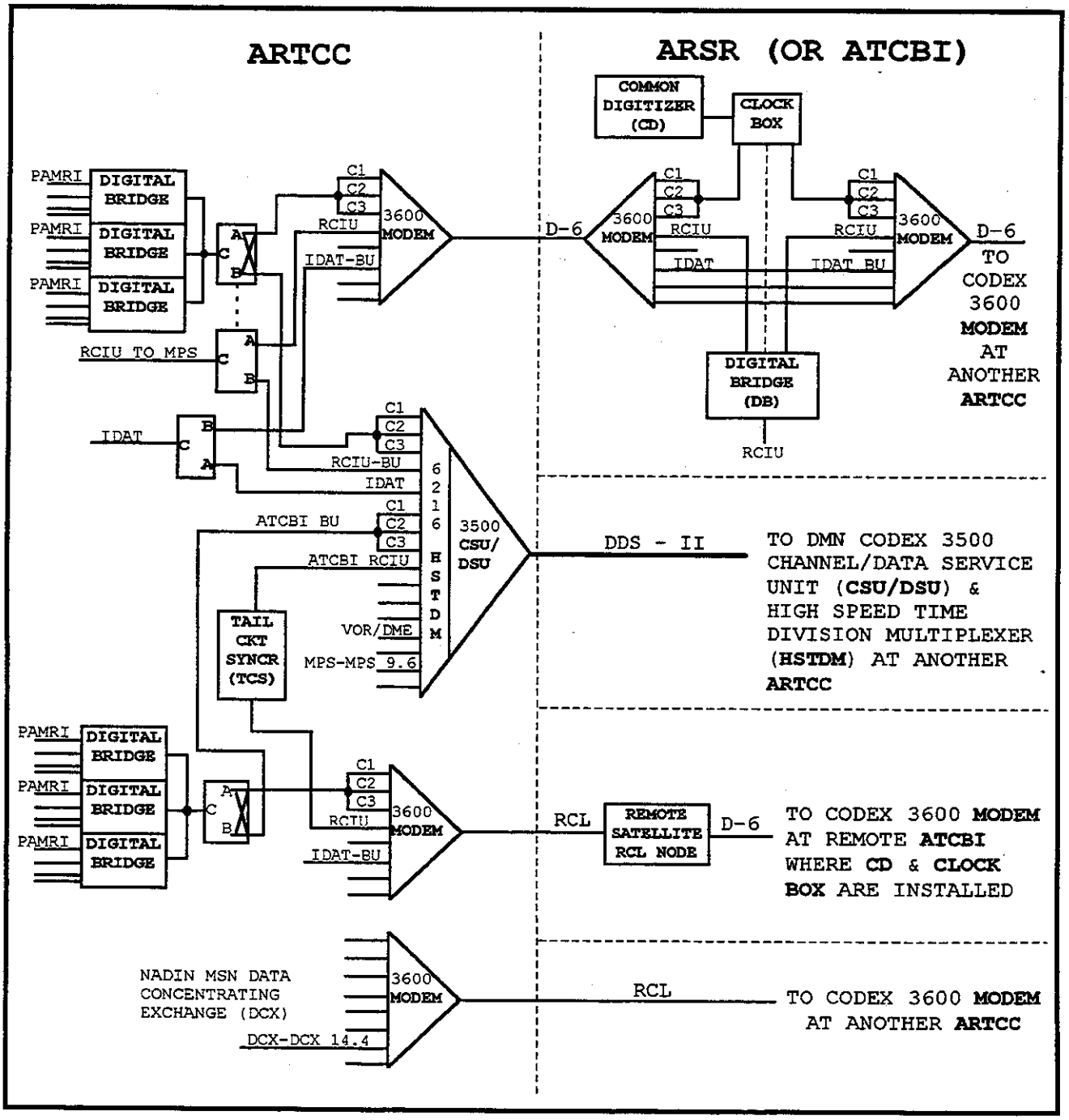

FIGURE 6-32. HIGH DENSITY RCL TERMINAL EQUIPMENT BAY CONFIGURATION

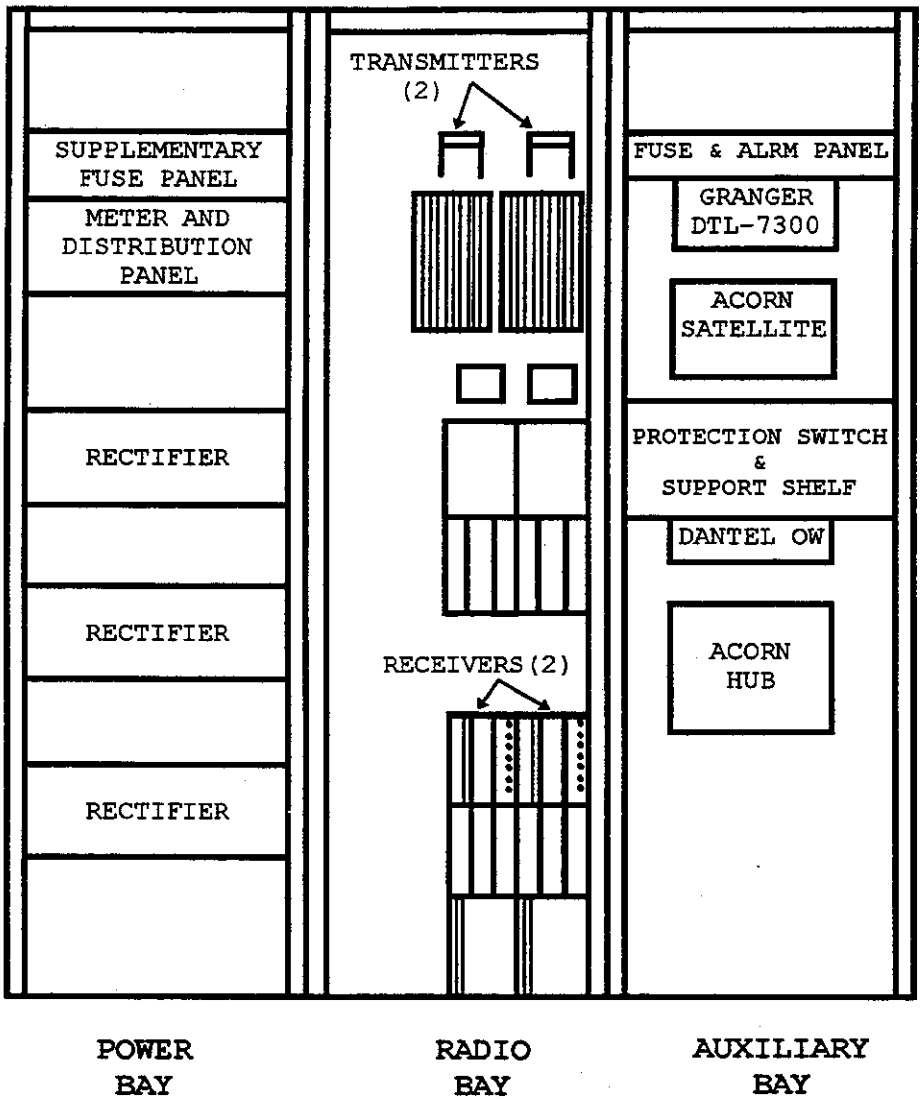

failure to allow automatic switching to a standby channel when an alarm condition is sensed in a primary channel.

(a) Path Analysis. A path analysis, including EMI and compliance with national microwave frequency usage, is required for each RCL link. Each regional Spectrum Management Office provides path analysis capability for RCL links and must approve each path based upon the path's compliance with relevant national orders. The analysis also shall be reviewed by each site manager and the Regional Associate Program Manager (RAPM) before the link can be approved for installation. The path analysis is used to assign the best operating frequency and antenna polarization for that RCL link.

(b) Racks. RCL equipment shall be mounted in standard 19 or 23 inch wide commercial racks, with maximum heights of 7 feet for LDRCL and 7-1/2 feet for backbone RCL racks. Normally all interconnections shall be accessible at the top, but bottom access shall be provided where required. Removable tops and removable dust covers shall be provided on all racks to protect interior components from dirt accumulation.

(c) Power. ARTCCs contain high density RCL terminals. Three rectifiers supply a single -24V DC bus carrying all ARTCC RCL loads. The ARTCC RCL rectifiers are powered from the ARTCC critical power bus. RCL repeater or low density terminal sites are powered by batteries which do not require ventilation and that provide 24 or 48 volts DC. Battery chargers charge the batteries automatically as needed from site 110/220 VAC power. Upon loss of AC power, batteries normally provide power for a minimum of 8 hours of RCL system operation. Where needed, additional batteries shall be installed to increase RCL system operation time, in 4 hour increments, to a maximum of 24 hours.

(d) Grounding. Lightning and transient protection, grounding, bonding, and shielding for all RCL equipment and installations at ARTCCs shall be in accordance with FAA-STD-019, FAA-STD-020, and Chapter 4 of this handbook. In Chapter 4, Figure 4-17, *Tower Grounding and Lightning Protection*, shows a typical RCL microwave antenna tower including details for antenna tower grounding.

(e) Waveguide. In an ARTCC, rectangular waveguide, type CPR112G for 8 GHz, shall be used on runs within the backbone microwave radio bay. Elliptical waveguide type GEP-78, which at 8 GHz attenuates the signal approximately 1.8 dB per 100 feet, shall be used on runs from the radio bay to the antenna. RCL waveguide shall be pressurized and dehydrated in accordance with FAA Order 6540.5A,

Maintenance of Radio Communication Link (RCL) Systems. Appropriate waveguide types shall be selected for use with other microwave LDRCL frequency bands. Instead of hollow waveguide, a low loss coaxial cable, such as foam dielectric coaxial cable, shall be used for UHF runs up to 200 feet long in LDRCL systems.

(f) Automatic Network Management System (ANMS). The ARTCC RCL ANMS has a new PC workstation platform, a new password protected windows based operating system, and upgraded Advanced Computer Resource Nucleus (ACORN) software. Each ARTCC workstation includes an AST Premmia 4/66d computer and an AMT ACCEL-535 printer for RCL status reporting and control. Through ACORN hubs and satellite remote sites, an ARTCC ANMS can monitor and control up to 8 RCL systems and up to 32 RCL terminal station and repeater sites. The system in Figure 6-33, *ARTCC RCL ANMS ACORN Central System and Network*, is capable of networking with 30 or more remote or local ANMS reporting systems. The ANMS provides real-time status of RCL alarms, remote control of switchable functions, dynamic displays of network conditions, system self diagnostics, and logging of all alarm events. Failures in digital RCL systems are sensed when bit error rate (BER) thresholds are exceeded. Pilot level sensing is used to detect some analog RCL system failures.

(2) 8 GHz Backbone RCL Configuration. RCL backbone links operate in the 7.125 to 8.4 GHz microwave frequency band and are utilized by other ATC major communication networks, such as DMN and NADIN. The RCL long haul backbone system consists of 35 separate microwave systems interconnected by physical cross-connects. The system is configured for frequency division multiplexed (FDM) analog channels, with optional broadband radar multiplexing, and digital T-1 carrier 1.544 Mbps channels, each with a T-1 capacity of twenty-four DS-0 64 kbps channels. The RCL system analog capacity was reduced by replacing all Karkar multiplexers with Granger multiplexers. Listed below are the lowered maximum available analog channel and unchanged digital channel capacities at many RCL backbone sites.

A:	360 VF (analog)	and	3 T-1	(72 DS0)	channels
B:	240 VF (analog)	and	4 T-1	(96 DS0)	channels
C:	180 VF (analog)	and	5 T-1	(120 DS0)	channels

However as major full terminal RCL backbone nodes, ARTCCs still can be configured for up to 600 VF channels and up to 5 T-1 carrier channels. Backbone RCL equipment shall not require routine maintenance, and channel restoration shall be at the card or chassis level.

FIGURE 6-33. ARTCC RCL ANMS ACORN CENTRAL SYSTEM AND NETWORK

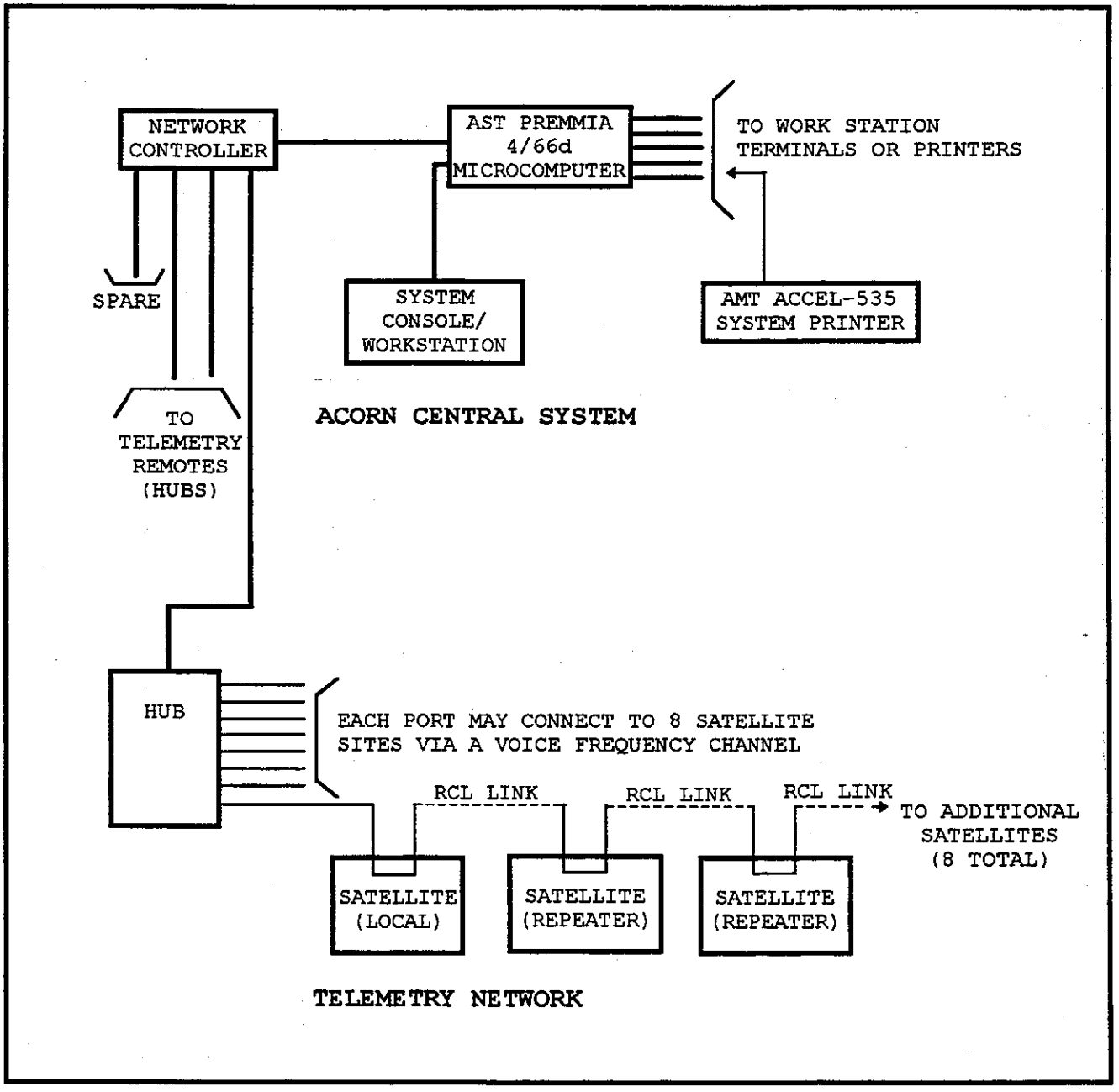

(a) Frequency Diversity. Each backbone RCL channel shall consist of two separate systems of transmitters and receivers carrying identical information. Each system shall be assigned a separate noninterfering frequency to provide frequency diverse operation for the channel. A minimum of common equipment shall be used. No single common equipment failure shall cause a channel outage.

(b) Space Diversity. If space diversity is required to correct specific fade path problems at a backbone RCL site, an extra antenna, receive only, shall be added. The usual frequency diverse transmitters and receivers all shall be connected to the top antenna. Two additional receivers, identical to the two frequency diverse receivers, shall be installed and connected with their own separate waveguide and hardware to the extra receive antenna. Normally, the extra receive antenna is installed a recommended 30 feet below the frequency diverse antenna to provide enough space diversity (separation) for both receive frequency paths.

(c) Antennas. Backbone RCL antennas shall be 8, 10, or 12 foot diameter parabolic reflectors (dishes) with ice shedding radomes or covers as needed. There shall be no heated radomes or antennas. High efficiency parabolic reflector antennas shall be used where required to meet system gain requirements.

(d) Multiplex Terminal Equipment. Each CONUS ARTCC contains a major node in the backbone RCL network and therefore requires access to all FDM channels on the multiplexed baseband. ARTCC backbone RCL terminals contain Granger multiplexers to place VF channels centered 4 kHz apart into a baseband extending from 60 kHz to 2540 kHz. The 600 FDM channel baseband is frequency modulated onto a carrier in the 8 GHz band. All multiplexing shall be compatible with the channel insert/drop repeater multiplexing equipment. Fairchild M5905 modems in the RCL system allow the addition of three to five digital T-1 channels with the analog VF channels. Loss of any single unit shall not cause the loss of the baseband. RCL terminal multiplex equipment shall be capable of cross connecting at the supergroup level (frogging) between collocated terminals.

(e) Insert/Drop Repeater Equipment. Insert/drop capability at a backbone repeater site shall use direct-to-line (DTL) multiplex systems. Channel modems shall utilize single sideband suppressed carrier modulation with 4 kHz channel spacing. Channel modems shall be CCITT compatible with the channel high-density RCL terminals. Repeater multiplex equipment shall utilize CCITT baseband allocations only for the first 10 supergroups (600 channels) between 60 and 2540 kHz since broadband multiplexed data may be inserted in

the frequency band above that point. Insert/drop multiplex equipment shall be accessible on site and be easily reconfigurable if channel requirements change. Repeater insert/drop multiplexers shall insert signals into both separate RF frequency channels for transmission from the repeater site and in both directions on both frequencies.

(f) Jackfields. At ARTCCs, two RCL backbone jackfield bays each provide jackfields for 480 VF channels. The jackfields shall use bantam type WE 482 or equivalent jacks. Jackfield connections shall be either connectorized or hardwired to terminal blocks. All 960 channel jackfield connections shall be configured for 4-wire service at least. VF channels to two RCL main distribution frames utilize 6-wire service. Surge protection for lines connected to the multiplexer are located in the RCL main distribution frames.

(g) Broadband Multiplexing Option. Optional broadband multiplexing is used to transmit PCM D4 or broadband analog radar data in addition to the usual 600 VF FDM RCL channels. Multiplexing options include 3.5 MHz bandwidth radar video, radar trigger and azimuth count pulses (ACP); 7 MHz bandwidth beacon video and beacon triggers; 60 channel FDM translation equipment for inserting either DTL multiplexer output or one standard supergroup into an assigned baseband slot; or a D4 channel bank (T1/DS1) with a baseband digital modem to interface data and 4-wire voice with signaling to the microwave backbone RCL system.

(h) Direct-To-Line Multiplexer. In an ARTCC, a Granger DTL multiplexer is used for the orderwire and ANMS VF service channels in the frequency range up to 60 kHz. Up to 60 drop/insert VF channels can occupy the frequency range from 60 to 300 kHz. All 0 to 4 kHz VF channels are amplitude modulated first with the primary 4.896 MHz carrier. Each upper sideband then is mixed with a selected frequency carrier to produce a desired sideband for insertion in its intended 4 kHz band within the baseband. Figure 6-34, *Granger DTL Frequency Division Multiplex Plan,* shows the DTL modulation plan.

(i) Microwave Radio. AT&T FR8 microwave radios are used at high density terminals and repeaters in the backbone RCL system. Microwave radio terminal block diagrams are shown in Figure 6-35, *FR8 Radio Terminal Transmitter Block Diagram,* and Figure 6-36, *FR8 Radio Terminal Receiver Block Diagram.* The FR8 accepts a baseband from 300 Hz to 8.5 MHz. The sub-baseband 32 kHz to 60 kHz is used for service channels. If transmitted with VF channels, broadband radar is placed in the upper portion of the baseband, thereby limiting available VF channels to a maximum of 600 channels. FR8 terminal transmitters add an 8.5 MHz pilot tone used to verify end-to-end continuity. In

FIGURE 6-34. GRANGER DTL FREQUENCY DIVISION MULTIPLEX PLAN

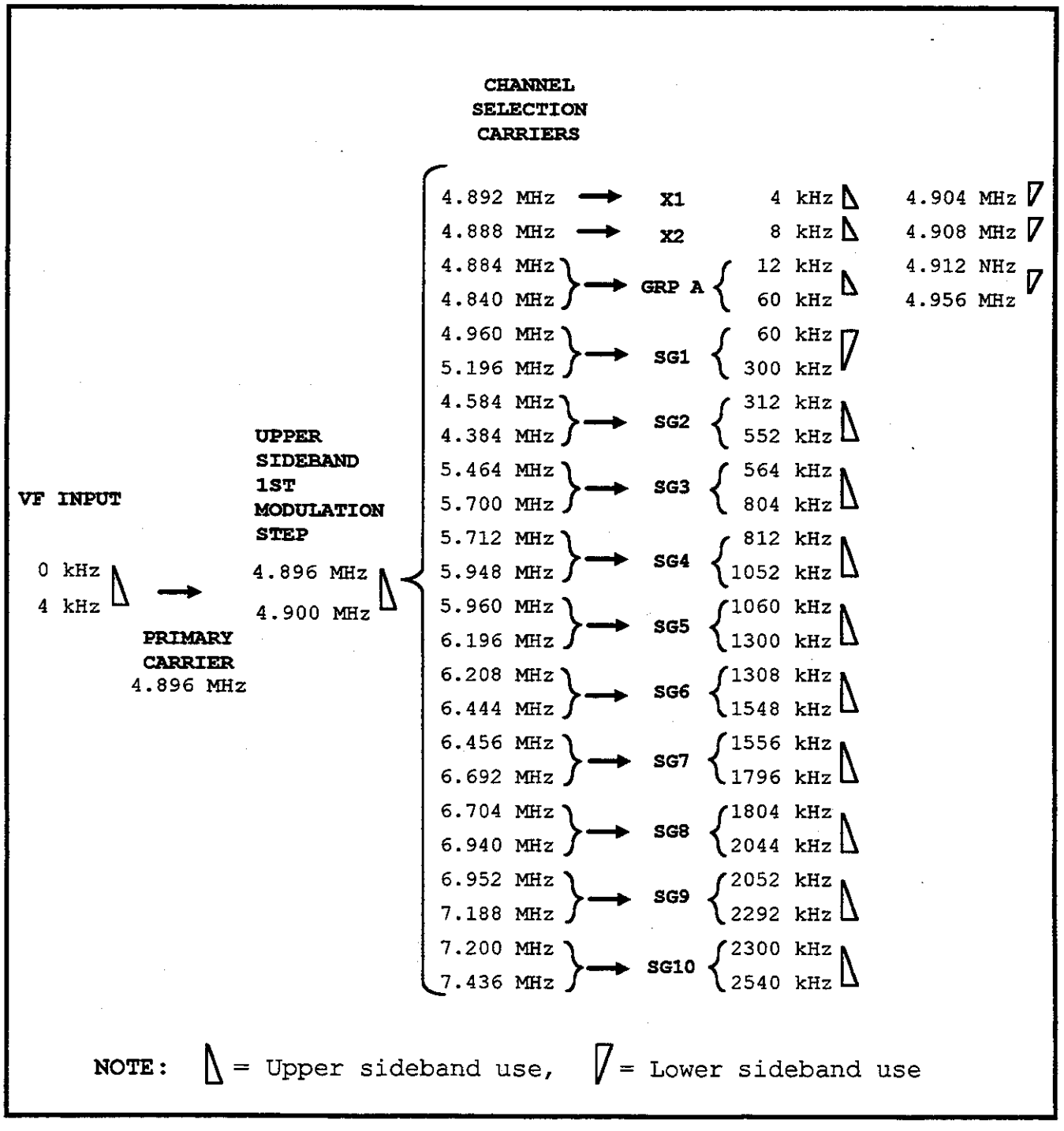

FIGURE 6-35. FR8 RADIO TERMINAL TRANSMITTER BLOCK DIAGRAM

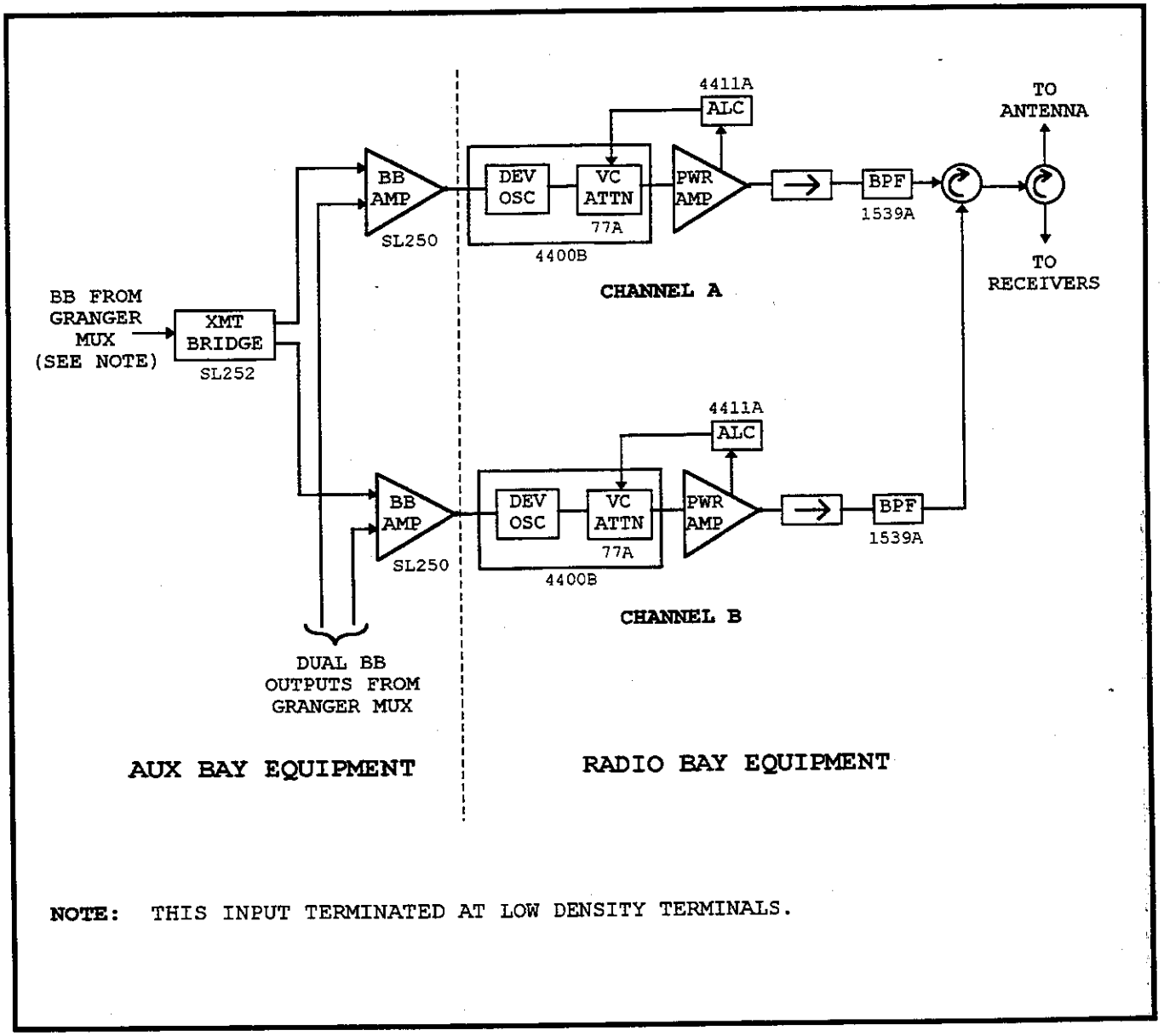

NOTE: THIS INPUT TERMINATED AT LOW DENSITY TERMINALS.

FIGURE 6-36. FR8 RADIO TERMINAL RECEIVER BLOCK DIAGRAM

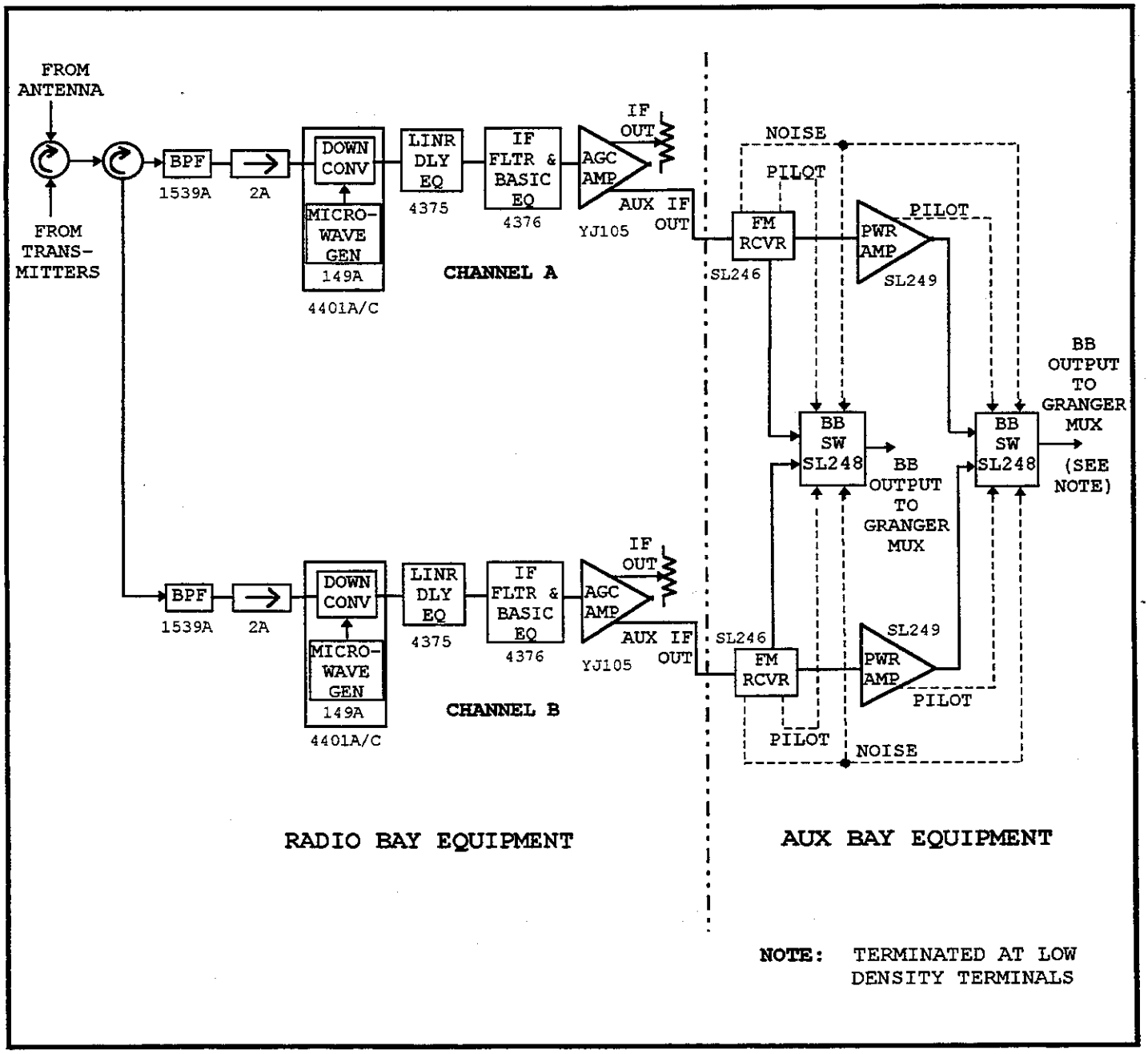

addition, the FR8 monitors a 40 kHz band centered at 8.7 MHz for baseband noise level. Figure 6-37, *FR8 Radio Space Diversity Receiver Block Diagram*, shows microwave receiver equipment required to accommodate an additional receive antenna installed for receive signal path diversity.

(j) Simplex Radio. An RCL backbone microwave radio can be configured for non-standby simplex (one way only) operation without an orderwire, for use only with broadband radar options. Simplex radios can share the same RCL waveguide and antennas as RCL backbone microwave radios configured for duplex operation. However, no baseband switch, FM receiver, or pilot and noise alarms are required for such radar simplex operation.

(k) Orderwire Channel. An RCL orderwire service channel shall be equipped at each station as a single link party line channel independent of multiplexed channels. The orderwire termination is located at the RCL terminal auxiliary bay in the protection switching and support shelf. The first modem on the Granger service channel shelf shall be dedicated for orderwire communications between RCL stations. Identical orderwire communications shall be injected into two separate RF frequency diverse voice channels and also shall be transmitted from the injection site in both directions for these two frequency diverse channels.

(3) 900 MHz UHF LDRCL Configuration. Analog UHF low density RCL systems may operate in the 932-935 MHz and 941-945 MHz federal government bands to supply full duplex capability for single voice grade circuits. No 900 MHz UHF installations are planned for ARTCCs. Multichannel UHF link sites can use direct-to-line (DTL) analog multiplexing to accommodate up to 12 voice channels over line-of-sight links up to 60 miles long.

(a) Transmitter Signal Strength. Transmitter RF power output shall be a minimum of 5 Watts measured at the transmitter antenna output port. Low loss, foam dielectric, coaxial cable may be used for a UHF run up to 200 feet in length between a transmitter and antenna.

(b) Antennas. Open grid type 4, 6, 8, or 10 foot diameter parabolic reflector (dish) antennas or corner reflector antennas shall be used for UHF links. The antenna beam width is restricted to 14° from 932-935 MHz and to 20° from 941-945 MHz.

(4) 1.8 GHz LDRCL Configuration. Low density RCL digital microwave systems can operate in the 1.7-1.85 GHz and 2.2-2.29 GHz

FIGURE 6-37. FR8 RADIO SPACE DIVERSITY RECEIVER BLOCK DIAGRAM

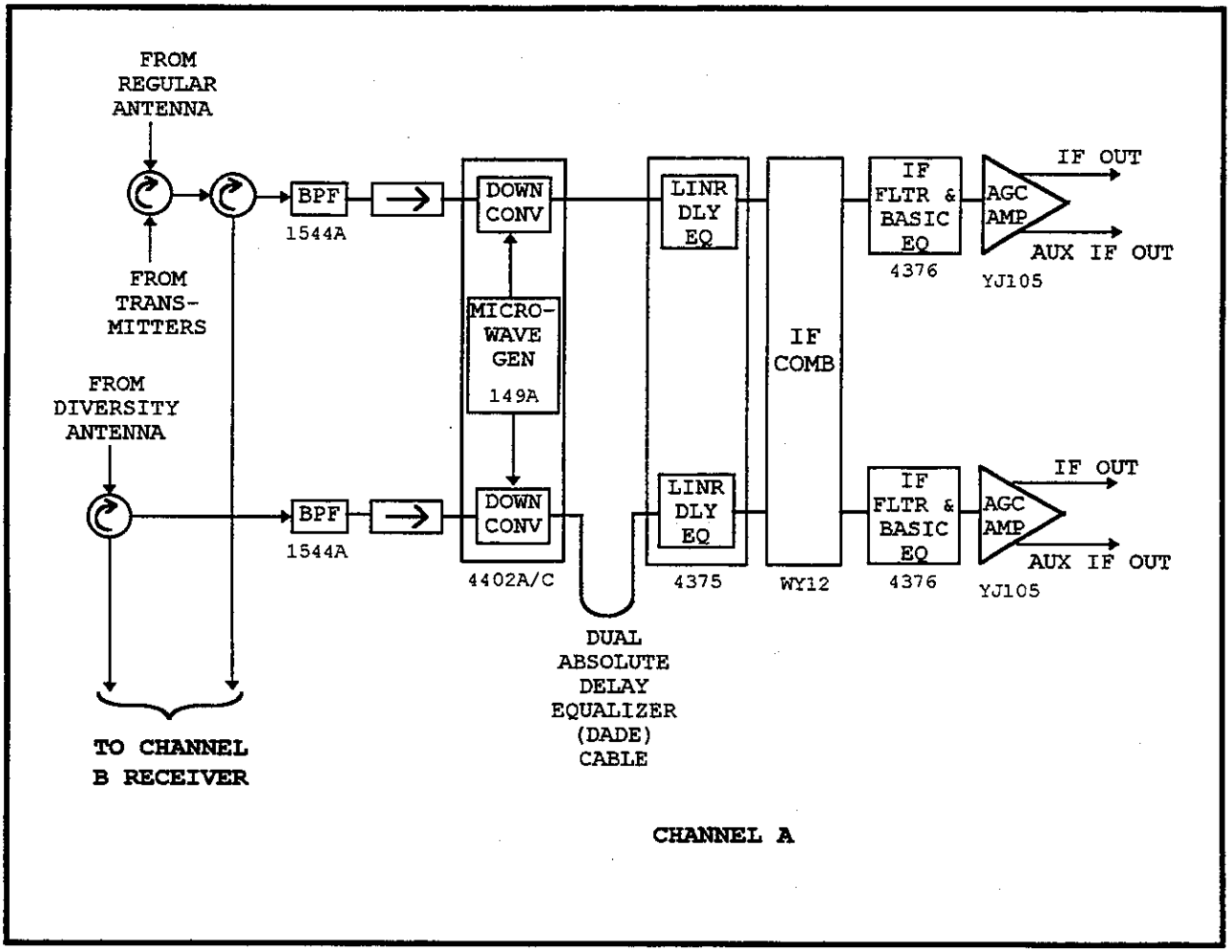

bands only at non-CONUS or remote non-interfering CONUS locations. In January 1999, the 1.7 GHz band will no longer be available to the government for CONUS use within 150 miles of major cities. Therefore, most CONUS 1.8 LDRCL systems have been upgraded to 8 GHz microwave frequencies. LDRCL 1.8 GHz digital multiplexing systems can accommodate up to 8 DS1 channels. Optional configurations provide narrowband multiplexing of one DS1 channel with occupied bandwidth not to exceed 1.6 MHz. The intermediate frequency (IF) used in the 1.8 GHz digital system is 70 MHz. The 1.8 GHz systems are used for line-of-sight paths up to 35 miles in length.

(a) Transmitter Signal Strength. Transmitter RF power output shall be a minimum of a 0.5 Watt measured at the transmitter antenna output port. Transmitters with optional output RF power of 1 or 3 Watts are available if required. Automatic transmitter power output control is an option.

(b) Transmission Lines. Low loss, foam dielectric, coaxial cable may be used for 1.8 GHz runs up to 200 feet in length between a transmitter and antenna. Dehydrated pressurized waveguide shall be used for longer runs or as needed.

(c) Antennas. Open grid 6, 8, and 10 foot diameter parabolic reflector (dish) antennas shall be used in the 1.8 GHz systems. Unheated solid or high performance dish antennas and ice shedding radomes shall be used where required.

(5) 23 GHz LDRCL Equipment Configuration. Short range microwave LDRCL systems operate in the 21.3-23.6 GHz government service band. They are capable of low density transmission using pulse code modulation (PCM) over distances not to exceed 10 miles. Fully redundant digital multiplexing at the channel bank level includes hot standby modems. A 23 GHz system provides a maximum capacity of eight DS1 channels.

(a) Antenna Options. Microwave parabolic reflector antennas may be 18, 24, 27, or 48 inches in diameter. Use of back-to-back antennas for passive repeaters is optional.

(b) Equipment Location. RF equipment shall be located in self-contained weatherproof housing. Modem interfaces may be located up to 600 feet remote from the RF equipment.

(6) LDRCL Equipment. Table 6-6, *LDRCL Equipment Dimensions & Weight*, lists dimensions and weight for various LDRCL systems or

TABLE 6-6. LDRCL EQUIPMENT DIMENSIONS & WEIGHT

EQUIPMENT DESCRIPTION	DIMENSIONS (inches)	WEIGHT (lbs)
ALCATEL 5202 1.8 GHz DIGITAL MICROWAVE RADIO SYSTEM	40.25 h x 19 w x 13 d	85
MICRONET 23 4 DS1 / 8 DS1 INTERFACE UNIT	5.25 h x 19 w x 12 d (8 DS1 PROTECTED)	20
23 GHz DIGITAL RADIO UNIT	12.3 h x 14.8 w x 6.8 d (HOT STANDBY PROTECTED)	27
PRISM SINGLE CHANNEL MUX (12 CHANNEL SHELF)	3.5 h x 19 w x 10.25 d	13.5
MICROWAVE DATA SYSTEMS MDS-960 UHF RADIO	15.85 h x 10 h x 8.75 d	
CHARLES INDUSTRIES WESCOM 360 D4 CHANNEL BANK 24 CHANNEL UNITS	24.5 h x 19 h x 12 d	83
PCP BATTERY CHARGER	21 h x 19 w x 14 d	150
WESTERN MULTIPLEX ONE-2000 1.8 GHz ANALOG RADIO SYSTEM	7 h x 19 w x 10 d	15

units. Other LDRCL requirements and parameters are found in FAA Specification FAA-E-2853A, *Low Density Radio Communications Link*.

(7) Interface. Typical radio connections for an auxiliary bay in a high density RCL terminal are shown in Figure 6-38, *Radio Interconnection Diagram, High Density Terminal Station Auxiliary Bay*. Audio frequency interface levels required for correct RCL operation are found in Order 6000.15A. RCL key performance parameters are identified in Table 6-7, *RCL System Key Parameter Standards & Tolerances with Audio Frequency Interface Levels*, which references specific paragraphs and tables in Order 6000.15A. Where the RCL interfaces with a Telco or inter-site line, end-to-end line performance requirements in Order 6000.22 shall be met.

b. Leased Interfacility NAS Communications System (LINCS). Two LINCS systems provide operational telecommunications and dedicated interfacility connectivity for non-routine critical aviation services. The large CONUS system is leased from and maintained by MCI, the service provider. A small system in Hawaii is leased from and maintained by GTE/Hawaiian Tel. Both systems connect ARTCCs and some TRACONs and AFSSs with dedicated telecommunications channels for critical ATC information exchanges.

(1) General. Both systems are highly reliable and extremely robust. The CONUS LINCS contains a backbone network consisting of nodes interconnected by diverse or redundant paths to provide dedicated connectivity between facilities. Over 150 LINCS nodes located at FAA facilities plus over 110 LINCS nodes at vendor (MCI) sites provide more than 10,000 channels for approximately 4,600 CONUS locations. Included are transmission channels of various types to meet industry standards required for specific uses such as medium or low speed modems. User facilities not on the LINCS backbone network maintain connectivity through local access lines to a LINCS node.

(2) Equipment Configuration. LINCS equipment is configured to eliminate single point failures. Each backbone node connects with at least two other nodes for path diversity. An end user location (EUL) is a facility which terminates a leased transmission channel at the facility FAA/Telco Demarc. EUL-A backbone channels provide diverse digital paths, automatic switching, rapid restoral, and guaranteed .99999 reliability of service. All ARTCCs, some TRACONs and AFSSs, and certain facilities required for a robust network are EUL-A sites. EUL-A sites are responsible for a large number of channels plus critical operational services and require path diversity or redundant links. The leased network is supported by a national program office with a manager from the service provider assigned to

FIGURE 6-38. RADIO INTERCONNECTION DIAGRAM, HIGH DENSITY TERMINAL STATION AUXILIARY BAY

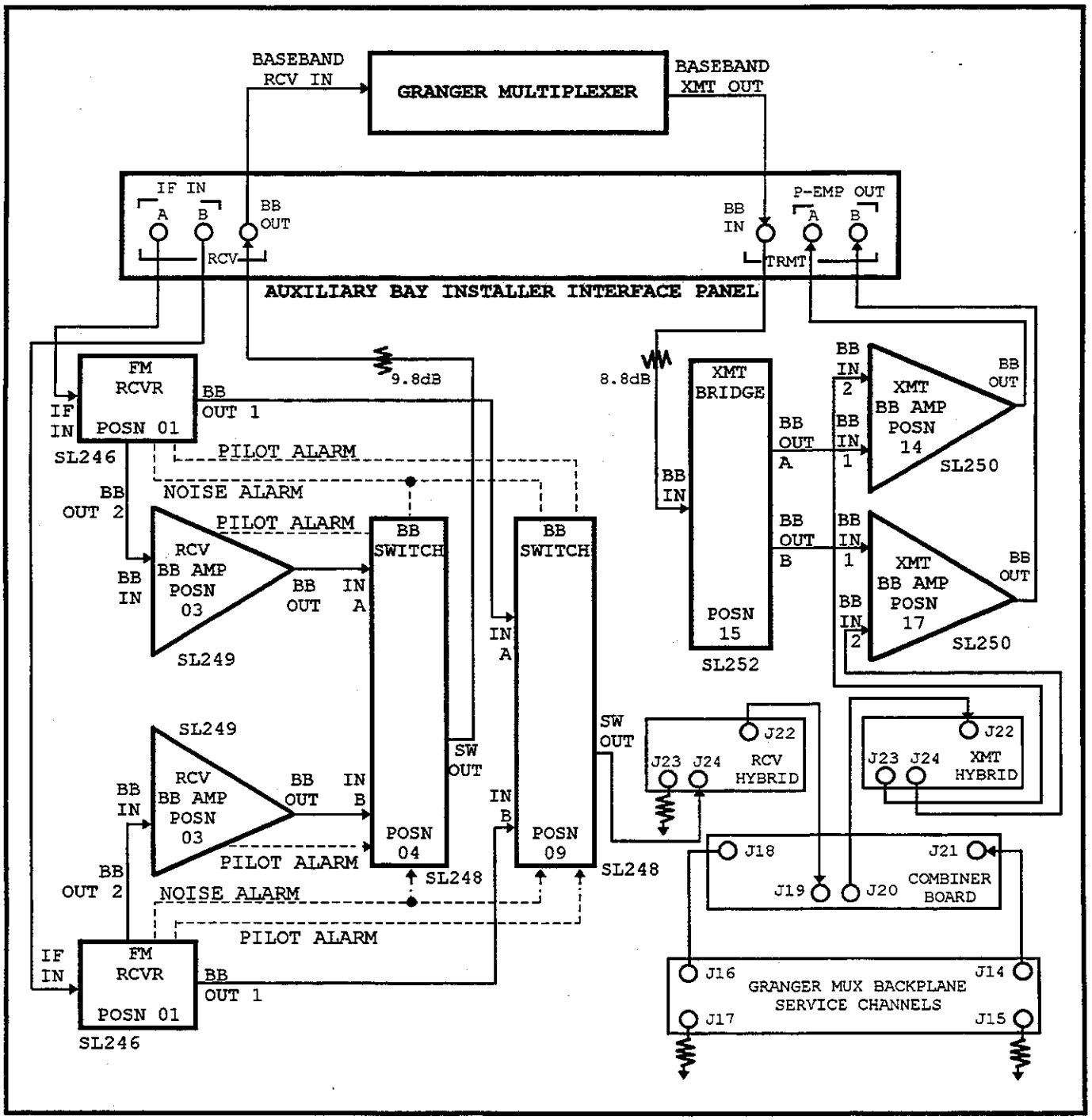

TABLE 6-7. RCL SYSTEM KEY PARAMETER STANDARDS & TOLERANCES WITH AUDIO FREQUENCY INTERFACE LEVELS

(Continued on next page)

PARAMETER (REFERENCES ARE TO PARAGRAPHS & TABLES IN ORDER 6000.15A)	REFERENCE PARAGRAPH	STANDARD	TOLERANCE LIMIT	
			INITIAL	OPERATING
a. Transmit Path (Granger)				
(1) Voice frequency (VF) input signal level, 1 kHz, 600 ohm balanced	na (Note 1)	-16 dBm (Note 2)	±1 dB	±4 dB
b. Transmit Path (FR8)				
(1) Deviatable oscillator output frequency (GEN MON)	65	Tables 5-1 and 5-2	±5 kHz	±80 kHz
(2) Automatic level control (ALC) network radio frequency (RF) monitor level (RF MON)	70	Radio Data Card (RDC)	±0.1 dB	±0.5 dB
c. Receive Path (FR8)				
(1) RF input power	67	RDC	±3.0 dB	±3.0 dB
(2) Down-converter RF frequency (GEN MON)	66	Tables 5-1 and 5-2	±5 kHz	±80 kHz
d. Receive Path (Granger)				
(1) VF output level, 1 kHz, 600 ohm balanced	68	+7 dBm (Note 2)	±3.0 dB	±3.0 dB
e. Station-to-Station or End-to-End				
(1) Delay response	71			
(a) Slope, 60 MHz to 80 MHz		0.0 nano-second (ns)	Table 5-4	Table 5-4
(b) Parabolic, 60 MHz to 80 MHz		0.0 ns	Table 5-4	Table 5-4
(c) Ripple (Peak-to-Peak)		0.0 ns	3.5 ns	3.5 ns
(2) Amplitude response, 60 MHz to 80 MHz	72	0.0 dB	3.5 dB window	3.5 dB window
(3) Transmitter linearity	73	0.0 %	1.0 %	1.0 %

PARAMETER (REFERENCES ARE TO PARAGRAPHS & TABLES IN ORDER 6000.15A)	REFERENCE PARAGRAPH	STANDARD	TOLERANCE LIMIT	
			INITIAL	OPERATING
(4) Baseband response	74	Table 5-6	Table 5-6	Table 5-6
(5) Thermal noise and tone	74	Table 5-7	Table 5-7	Table 5-7
(6) Noise-to-power ratio (NPR) and thermal noise	74	Table 5-8	Table 5-8	Table 5-8
h. Battery Plant Float Voltage	75	26.04 VDC	±0.1 VDC	±0.1 VDC

Notes:

1. See applicable terminal equipment instruction book or handbook for procedures to check and adjust voice frequency transmit levels.

2. This signal level is nominal for voice communications only. Nominal signal level for data modem communications is 13 dB below this level.

each region. The initial LINCS network systems are upgraded or enlarged as usage requires. Optional add-on services are available, such as Stratum 1 traceable clocking at EUL-A sites, UPSs at EUL-A and EUL-B sites, engineering services, and facility site preparation.

(3) Interface. Direct digital connectivity (DDC) has been added at many nodes to improve network performance and eliminate the requirement for some modems and carriers. DDC allows utilization of high capacity T1 carriers for multiplexed digital data. The LINCS network interfaces with FAA Operational Control Centers (OCCs) through standardized smartcards which provide RMM capabilities. Figure 6-39, *LINCS Network Structure,* depicts the LINCS system concept. The LINCS network interfaces with FAA leased and owned systems in compliance with industry standards listed in Table 6-8, *Industry Standards.*

c. High Capacity Carriers (T1). T1 type digital carriers can concentrate 24 voice grade circuits into one 4-wire full duplex channel. First, each analog voice circuit is digitized as PCM data. Then each digitized circuit is time division multiplexed into its own assigned time slot on the T1 carrier. T1 lines carry multiplexed digital data at 1.544 Mbps between FAA facilities or to telco service providers and reduce significantly the number of costly transmission lines required. T1 carriers are utilized by ARTCC, TRACON, ATCT, AFSS, RTR, and FAA management facilities for interfacility communications. The LINCS network uses T1 carriers extensively.

(1) General. For high capacity carriers, a multilevel TDM digital signal (DS) hierarchy has been developed. The DS1 level corresponds to the 1.544 Mbps T1 type TDM carrier transmission rate. The basic unit on which the TDM DS hierarchy is structured is the DS0 (DS zero) level which represents a digital signal at 64 kbps in one DS1 time slot. Digital TDM carriers with the same transmission rates are combined further using TDM to produce higher level DS signals transmitted at faster bit rates. Overhead bits for synchronization, coding, and error correction are included in final transmission rates. DS levels and line transmission bit rates are shown in Table 6-9, *U.S. Time Division Multiplexing (TDM) Digital Signal Hierarchy.* An FT3 lightwave system carries DS3 signals at 44.736 Mbps.

(2) Equipment Configuration. A T1 carrier can support 24 full duplex voice grade circuits on two pairs of unshielded twisted pair 19 AWG cable. Typically the T1 multiplexer customer premises equipment (CPE) at an ARTCC includes a T1 or D-type channel bank which supplies binary digital signals to data service units (DSUs) and/or channel service units (CSUs).

FIGURE 6-39. LINCS NETWORK STRUCTURE

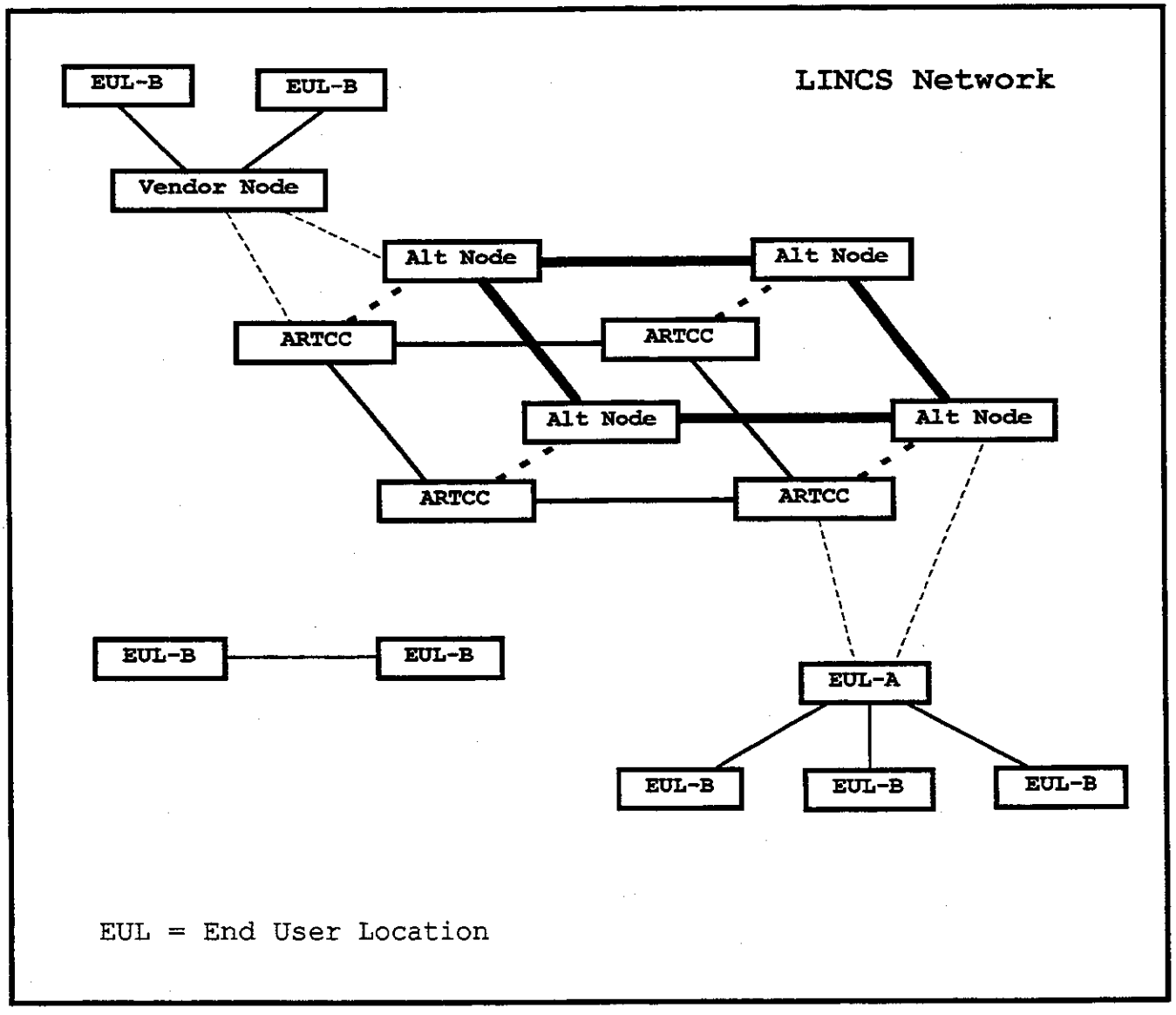

TABLE 6-8. INDUSTRY STANDARDS

	SERVICE	SPECIFICATION
A.	**Type VG (Voice Grade)** 1) VG-6 2) VG-8	Bellcore TR-NPL-000335 Rev. 2 of November 1987 AT&T Pub. 43801
B.	**Type DDS (Digital Data Service)** 1) DDS-2.4 (2400 bps) 2) DDS-4.8 (4800 bps) 3) DDS-9.6 (9600 bps) 4) DDS-19.2 (19.2 kbps) 5) DDS-56 (56 kbps) 6) DDS-64 (64 kbps)	AT&T Pub. 62310 AT&T TR 54075 Bellcore TR-NPL-000157
C.	**Type DDC (Direct Digital Connectivity)** 1) DDC-1/232 (2.4 kbps - 19.2 kbps) 2) DDC-1/530A (2.4 kbps - 1.536 Mbps) 3) DDC-1/V.35 (2.4 kbps - 1.536 Mbps) 4) DDC-2/232 (2.4 kbps - 19.2 kbps) 5) DDC-2/530A (2.4 kbps - 56 kbps) 6) DDC-2/V.35 (2.4 kbps - 56 kbps) 7) DDC-3/232 (2.4 kbps - 19.2 kbps) 8) DDC-3/530A (2.4 kbps - 56 kbps) 9) DDC-3/V.35 (2.4 kbps - 56 kbps)	RS-232C EIA/TIA-530A ITU-TSS-V.35, V.10, V.11 ISO-2593 ITU-TSS-V.24
D.	**Type F (Fractional DS1, Channelized Format)** 1) F-64 (1 DS0 Channel) 2) F-128 (2 DS0 Channels) 3) F-256 (4 DS0 Channels) 4) F-384 (6 DS0 Channels) 5) F-512 (8 DS0 Channels) 6) F-768 (12 DS0 Channels)	ANSI T1.403-1989 ANSI T1.107-1988
E.	**Type FB (Fractional DS1, Bulk Format)** 1) FB-64 2) FB-128 3) FB-256 4) FB-384 5) FB-512 6) FB-768	ANSI T1.403-1989 ANSI T1.107-1988
F.	**Type DS1 (1.544 Mbps, Channelized Format)**	ANSI T1.403-1989
G.	**Type DS1B (1.544 Mbps, Bulk Format)**	ANSI T1.107-1988 ANSI T1.403-1989
H.	**Type DS3 (44.736 Mbps)**	ANSI T1.107-1988 ANSI T1.404-1989 Bellcore TA-TSY-000342
I.	**Synchronization**	Bellcore TA-NPS-000436

TABLE 6-9. U.S. TIME DIVISION MULTIPLEXING (TDM) DIGITAL SIGNAL HIERARCHY

LEVEL	DIGITAL TRANSMISSION HIERARCHY LEVEL DESIGNATOR	NUMBER OF DS0 CHANNELS	LINE BIT RATE	MULTIPLEXING/DEMULTIPLEXING EQUIPMENT DESIGNATORS
LEVEL 0	DS0	1	64 kbps	
LEVEL 1	DS1	24	1.544 Mbps	
LEVEL 1	DS1C (a subset of Level 1)	48	3.152 Mbps	
LEVEL 2	DS2	96	6.312 Mbps	
LEVEL 3	DS3	672	44.736 Mbps	
LEVEL 4	DS4 (NOT USED, SEE NOTE 1)	4032	274.176 Mbps (SEE NOTES 1 and 2)	

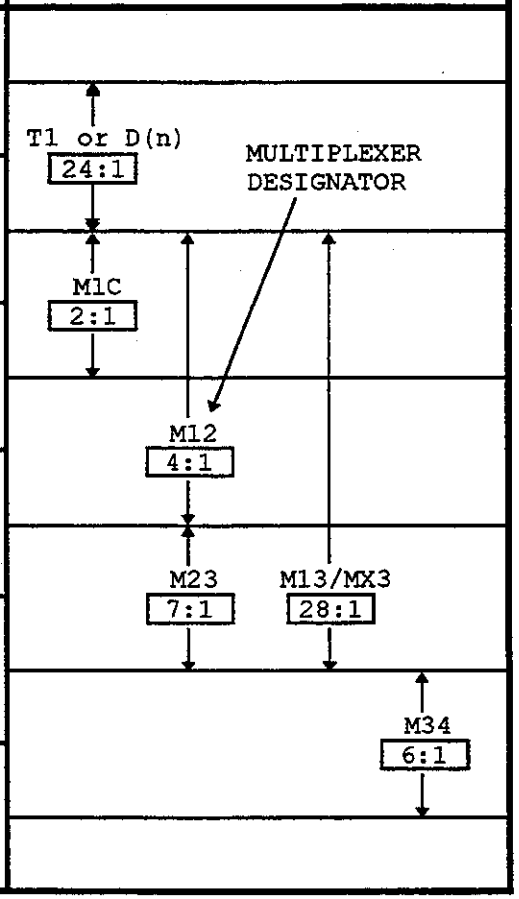

NOTES: 1. In North America, the Level 4 line rate is 139.264 Mbps.

2. Line rates are not multiples of 1.544 Mbps due to added overhead bits for additional multiplexing.

(a) Data Service Unit (DSU). If not already supplied by ARTCC equipment, a DSU provides transmit and receive control logic, frame synchronization, and timing recovery across T1 or other digital circuits and converts binary signals into special bipolar signals for the CSU. DSU/CSU combined units may be used.

(b) Channel Service Unit (CSU). CSU functions include termination of telco digital circuits and protection of the network from harmful signals in accordance with Code of Federal Regulations Title 47, FCC, Part 68, *Connection of Terminal Equipment to the Telephone Company*. CSUs provide line conditioning and equalization, error control, and the ability to respond to loop-back circuit testing commands.

(3) Interface. A block diagram of a typical DS1/T1 service interface is shown in Figure 6-40, *DS1/T1 Service Connection Example*. On T1 digital carriers, bipolar data format is used with twisted pair transmission media to facilitate single error correction at the CSU/DSU interface.

d. Satellite Links. Transponders on commercial satellites are leased as needed to increase reliability and diversity for NAS telecommunications links which provide communication, navigation, and surveillance (CNS) voice or data. International standards for an Aeronautical Mobile Satellite System (AMSS) were developed for adoption into International Civil Aviation Organization (ICAO) Standards and Recommended Practices (SARPs). After SARPs approval by ICAO, Minimum Operational Performance Standards (MOPS) for AMSS will be used to certify the AMSS equipment and similar equipment for use in other Aeronautical Telecommunications Network (ATN) satellite links.

(1) Equipment Configuration. Each ARTCC will require a data link processor (DLP) with an ATN router to accept and redirect interfacility air traffic management (ATM) data via an aeronautical data link (ADL) system. In the ARTCC, the DLP and router also will process data from systems such as NADIN PSN, Mode S, and a VHF TDMA data link. To minimize landline distances, earth stations leased for satellite links shall be located as close as possible to the FAA facilities being served. Both the RCL system and the Alaskan interfacility system currently use satellite links in conjunction with landlines. Satellite links using both stationary and transportable earth stations will provide flexibility in the FAA telecommunications satellite (FAATSAT) system for intefacility communications growth. Portable earth stations can replace or temporarily augment ATM communication links and also can provide disaster recovery services as needed.

FIGURE 6-40. DS1/T1 SERVICE CONNECTION EXAMPLE

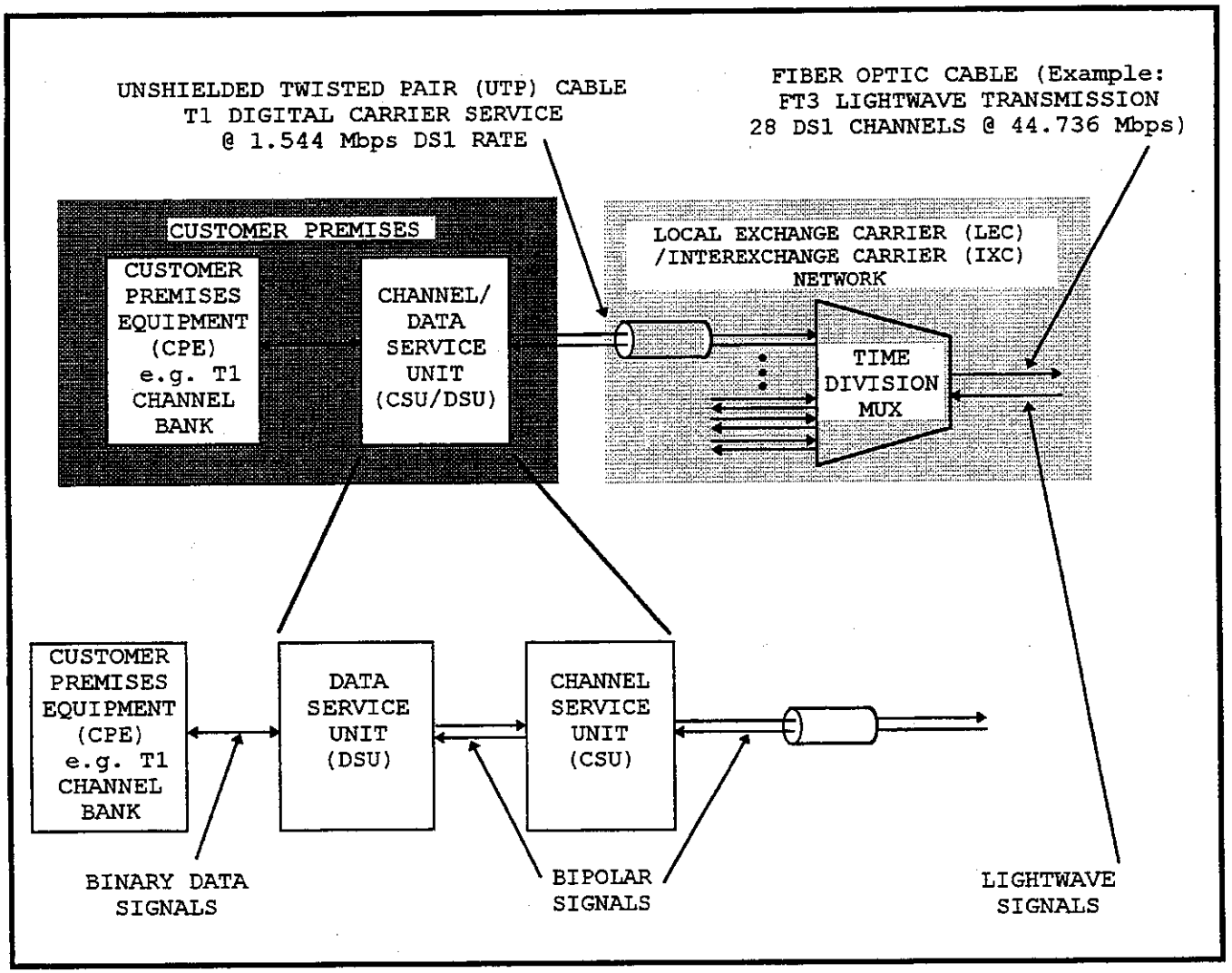

(2) Alaskan NAS Interfacility Communications System (ANICS). The ANICS network utilizes satellite links to provide ATC voice and data communications for otherwise unreliable, difficult to maintain, or geographically impossible links. Network communications provide diversity and utilize two satellites through four leased transponders.

(a) Equipment Configuration. The ANICS network control center (NCC) in the Anchorage ARTCC contains a network management and control system (NMCS) to monitor circuit quality and reroute circuits. The space linked backbone system contains four network hub earth stations, three of which are near AFSSs and one near the Anchorage ARTCC, and diverse remote earth stations. ANICS uses available COTS satellite systems including modular expandable earth station buildings, antennas, transmitters, receivers, up and down converters, mux and demux equipment, modems, and maintenance service.

(b) Interface. ANICS interfaces with critical and essential facilities that provide A/G ATC voice communications; radar, weather, flight, and RMM data transfers; and operational support voice and data communications. Earth stations connect to nearby FAA facility demarcation points through cable or transmission line. An ANICS installation in Seattle provides CONUS connectivity with Alaska.

(3) FAA Telecommunications Satellite (FAATSAT) System. The FAATSAT system is an FAA lease contract with MCI Telecommunications Corporation. The system provides an FAA interfacility communications network using geosynchronous satellites to link critical ATC communications in CONUS, Puerto Rico, Hawaii, and the Virgin Islands. This network provides alternative paths and circuit diversity for primary telecommunications circuits to increase reliability. The FAATSAT system also has large bandwidth and high capacity transmission capabilities needed by programs such as the Weather and Radar Processor (WARP), Integrated Terminal Weather System (ITWS), and Next Generation Weather Radar (NEXRAD).

258. AUTOMATIC LINE TEST EQUIPMENT (ALTE). ALTE is installed near the main Demarc in each ARTCC to identify and isolate as precisely as possible the source of analog transmission line problems. The automated menu-guided system tests analog communication lines for frequency response, line distortion, noise, on-line power surges, and line specific parameters to diagnose the line condition and to protect attached equipment. ALTE tests both local and remote analog telecommunications channels with hardware and software which are proprietary and are maintained by the supplier. Since ALTE is applicable to analog transmission lines only and analog lines are

being replaced by digital lines, this system will be replaced with a test system that can diagnose digital transmission line condition.

259.-267. RESERVED.

SECTION 9. BACKUP EMERGENCY COMMUNICATION (BUEC) EQUIPMENT

268. GENERAL. BUEC A/G radios provide an A/G voice channel between air traffic controllers and pilots when both main and standby primary A/G radio circuits have failed or are incoherent. Therefore, site diversity for BUEC A/G radios is critical to provide backup ATC A/G communications channels. BUEC VHF and UHF radios are located at ATC sites other than RCAGs, at navigational sites such as VORTAC, VOR/DME, and ILS, and at RCL sites. Each ATC sector shall have at least one BUEC site or shall have more sites as required to provide adequate sector coverage. A BUEC site may be located at an ARTCC.

269. EQUIPMENT CONFIGURATION. Independent of BUEC site location, BUEC A/G radio circuits must be connected to air traffic controllers through the VSCS in the regional ARTCC. Motorola A/G transmitters and receivers require connection through the VSCS and through RCE modular equipment. Each control and remote RCE pair is dedicated to one voice channel. The control RCE unit connects the VSCS circuit to a transmission line. At the BUEC radio end of the ground portion of the transmission path, a dedicated remote RCE unit at the BUEC site connects the BUEC channel to a VHF or UHF transmitter and receiver pair. Older VHF and UHF BUEC ITT transceivers are connected through the VSCS but do not use RCE units. Selection of either VHF or UHF BUEC channel radios is made by the air traffic controller at the ATC position console.

a. BUEC Radios. BUEC A/G radios with analog outputs include Motorola transmitters and receivers and older ITT transceivers. The transceivers may be replaced completely by the year 2002. Older BUEC processor and priority modules, required for ITT transceiver operation through a VSCS, are removed only after an ARTCC has transitioned completely to BUEC A/G channels using separate A/G transmitters, receivers, and RCE units identical to primary channel equipment.

(1) ITT Transceiver. ITT analog A/G transceivers provide an output of 20 watts and are capable of being tuned remotely. BUEC ITT transceivers still require priority modules and BUEC processors, but now operate through a VSCS and are fixed tuned to a sector frequency. Obsolete components in transceivers currently are maintained by cannibalizing working parts from failed transceivers. Remaining ITT transceivers will be maintained until radio replacement or BUEC site relocation occurs within a period of approximately three years.

(2) Motorola CM-200 Radios. Motorola analog output A/G transmitters and receivers use digital technology internally. Each Motorola radio pair consists of a separate CM-200VT VHF (or CM-200UT

UHF) transmitter unit and a CM-200VR VHF (or CM-200UR UHF) receiver unit. Motorola CM-200 transmitters, used in both RCAG and BUEC A/G voice circuits, contain cavity filters which are not frequency agile. Each cavity filter is tuned to a fixed sector frequency before installation in a radio. CM-200 transmitters can output 10 watts nominal power. The addition of a linear power amplifier (LPA) may be an option to maintain required coverage if EMI is not a problem.

b. RCE Equipment. The CSTI RCE equipment discussed in Section 6 of this chapter is identical to the RCE equipment used to interface the VSCS with BUEC radios. Use of CSTI RCE equipment adds the capability of monitoring the status of channel equipment and, if RMS detector equipment is installed at the site, the status of some site conditions.

270. INSTALLATION. All BUEC RCE and radio equipment can be mounted in standard 19 inch racks. Forced air cooling and ventilation spacing between equipment shelves shall be provided in each rack installation to avoid equipment overheating. BUEC equipment shall be located to avoid EMI, such as from a DMN common digitizer. BUEC site collocation with any radar site is not recommended.

a. VSCS BUEC Installation. After an ARTCC transitions completely to VSCS operation, each BUEC channel communicates through its own VSCS interface module and the VDF.

(1) Transceiver BUEC Channel. Each VHF (or UHF) BUEC ITT transceiver requires a channel BUEC priority module and BUEC processor and does not communicate through RCE. The channel BUEC priority module must be set to zero for the VSCS to recognize selection of that channel. There is no standby transceiver in a BUEC channel.

(2) S-BUEC Channel. An S-BUEC channel normally contains both a VHF and a UHF CM-200 transmitter/receiver pair, all controlled through the VSCS and RCE units. Each S-BUEC voice channel has its own dedicated control RCE unit interfaced between the VDF and the MDF as shown in Figure 6-41, *Comparison of a Primary Channel and a Sustaining-BUEC (S-BUEC) Channel*. There are no standby radio pairs in S-BUEC channels. A separate transmission path is used for each BUEC channel from the VSCS through dedicated RCE modular units to and from the channel VHF and UHF BUEC radios.

b. Remote Site Installation. Instructions for remote site installation of BUEC equipment, including the antenna, is found in FAA Order 6580.3A, *Remote Communications Facilities Installation Standards Handbook;* however, collocation with radar sites is not recommended.

FIGURE 6-41. COMPARISON OF A PRIMARY CHANNEL AND A SUSTAINING-BUEC (S-BUEC) CHANNEL

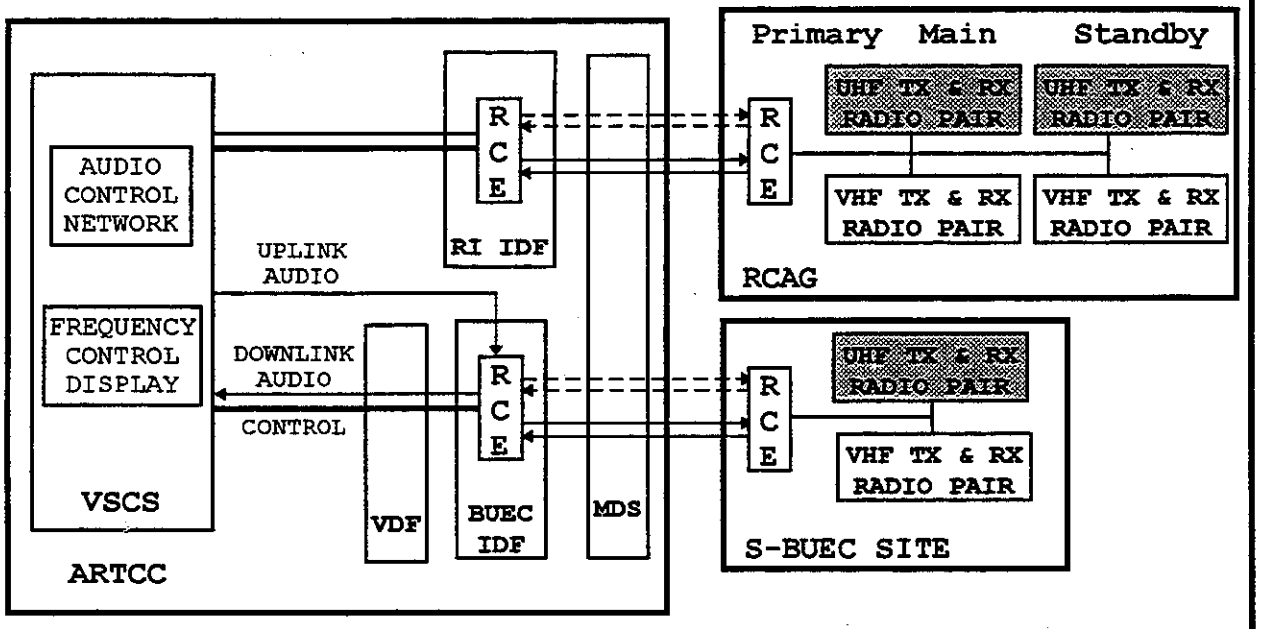

NOTES:

1. A ⇄ secondary link with a BUEC site is available only through the RCL system.

2. This diagram does NOT apply to BUEC channels using BUEC ITT transceivers.

DEFINITIONS:

IDF	Intermediate Distribution Frame
MDS	Master Demarcation System
RCE	Radio Control Equipment
RI	Radio Interface
VDF	VSCS Distribution Frame
VSCS	Voice Switching & Control System

271. INTERFACE. In an ARTCC, each VSCS interface for RCE equipment supporting BUEC radios is the same as each interface supporting similar RCE for RCAG radios. This information is presented in Section 6 of this chapter. Also, when a controller selects a BUEC circuit, the VSCS returns a signal to satisfy the ATC position console BUEC channel selection circuitry. Table 6-10, *Signals On VSCS and BUEC Terminal Blocks*, lists the signals repeated on each numbered group of 16 punch-down block terminals. Remote BUEC radio sites for each sector are interfaced to the ARTCC over dedicated LINCS telecommunication channels, satellite circuits, and/or RCL or LDRCL microwave channels to provide channel path diversity. See Section 8 of this chapter for more information on interfacility links.

272.-281. RESERVED.

TABLE 6-10. SIGNALS ON VSCS AND BUEC TERMINAL BLOCKS

PUNCH DOWN BLOCK TERMNAL NUMBERS			SIGNALS ON VSCS BLOCKS	SIGNALS ON BUEC BLOCKS IN ALL BUEC RACKS
1	17	33	BUEC PTT	BUEC PTT
2	18	34	BUEC PTT return	BUEC PTT return
3	19	35	BUEC Tx Audio 1, 600 Ohm	BUEC Tx Audio 1, 600 Ohm
4	20	36	BUEC Tx Audio 2	BUEC Tx Audio 2
5	21	37	BUEC Transfer Ready	BUEC Transfer Ready
6	22	38	BUEC Transfer Ready return	BUEC Transfer Ready return
7	23	39	BUEC Rx Audio 1, 600 Ohm	BUEC Rx Audio 1, 600 Ohm
8	24	40	BUEC Rx Sudio 2	BUEC Rx Sudio 2
9	25	41	BUEC Select	BUEC Select
10	26	42	BUEC Reset	BUEC Reset
11	27	43	BUEC Malfunction	BUEC Malfunction
12	28	44	BUEC Priority Level	BUEC Priority Level (= #0)
13	29	45	Ground, common	Ground, common
14	30	46	No connection	No connection
15	31	47	No connection	No connection
16	32	48	No connection	No connection
49			SPARES	
50				

NOTES:

1. The VSCS counts pulses to always return a simulated priority level of zero, which indicates that a dedicated sector BUEC channel has been selected.

2. BUEC Reset is used to clear a BUEC Malfunction to return to BUEC Transfer Ready.

3. BUEC channels receive no confirmation for control signals received by a remote BUEC site.

SECTION 10. HIGH CAPACITY VOICE RECORDER (HCVR)

282. GENERAL. All ATC position voice communications are recorded as a legal record required in case of aircraft accident or incident. The Magnasync/Moviola High Capacity Voice Recorder (HCVR) is an analog 60 channel, reel-to-reel magnetic tape recording system. The HCVR is supplied in cabinets which contain COTS equipment to record voice and a date/time code simultaneously. ARTCCs use an HCVR analog system, which records continuously in 24 hour sessions, or a Digital Voice Recorder System (DVRS). Modular 25 pair wiring shall be installed between the VSCS recorder IDF and HCVR or DVRS equipment. DVRSs will replace HCVR systems in ARTCCs by year 2002.

283. EQUIPMENT CONFIGURATION. An HCVR system includes two systems with separate functions. The 60 channel voice recorder/reproducer system consists of dual transport recorder/reproducer units to record real-time audio communications and the actual time of occurrence. The portable reproducer system transfers a channel of pre-recorded audio and its correlating time/date code from 60 channel tape to cassette tape for a legal record or training usage.

a. Dual Transport Recorder/Reproducer Unit. Each HCVR dual transport 60 channel recorder/reproducer unit houses dual tape transports, a volume unit (VU) meter panel, and a power supply. A status indicator unit is cabled to the dual transport unit to allow remote status monitoring. All recorder/reproducer units require 110 VAC from the ARTCC critical bus. A recorder/reproducer unit in each HCVR system is designated the maintenance spare unit. One recorder/reproducer unit also can house a master synchronizer and a GPS receiver required to provide exact universal time for the HCVR system. Both the master synchronizer and GPS receiver are installed above the top transport in a recorder/reproducer unit or in a separate cabinet.

(1) Dual Transport. The dual tape transport includes two identical transports. Both use 10-1/2 inch reels of 1 inch wide, 60 channel magnetic tape. Each of the two transports is a standby for the other transport. The standby transport is switched in automatically for continuous recording when a fault or recording interruption in the operating transport is sensed. A tape transport can be switched manually also to allow replacement of its tape reels each 24 hours or as necessary. A keypad/time code generator reader on each recorder/reproducer transport provides complete control of setup, display, transfer time, channel selection, record/play operations, channel monitoring, failure records, and record searches by date or time. Selections available on the keypad are shown in Figure 6-42. *Recorder/Reproducer Keypad.*

FIGURE 6-42. RECORDER/REPRODUCER KEYPAD.

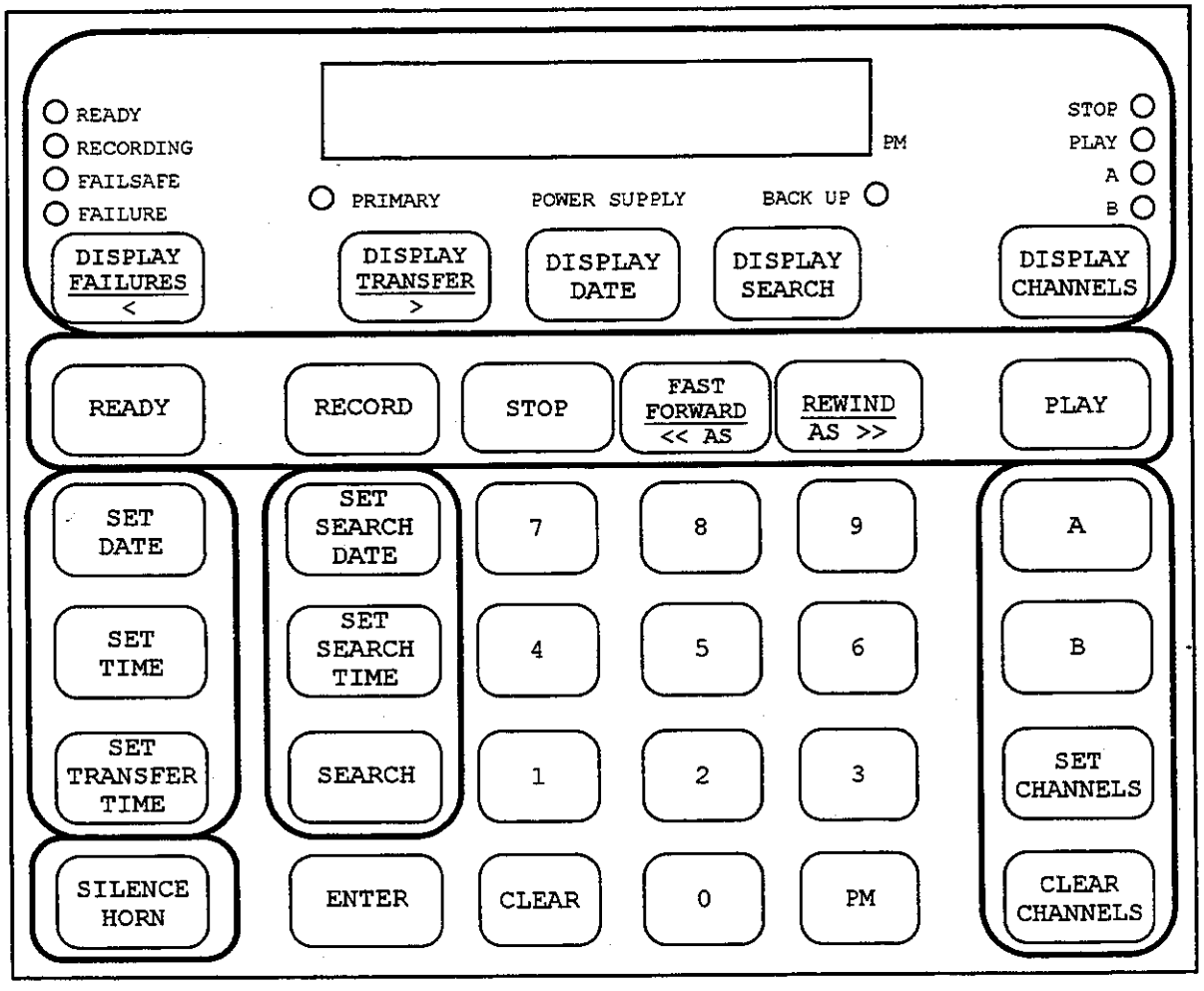

(2) Volume Unit (VU) Meter Panel. A VU meter is located on a front panel of each recorder/reproducer unit. The VU meter displays the audio input level of any selected channel.

(3) Master Synchronizer. The master synchronizer contains a time/date code generator and keypad. The rear port, IRIG Input, requires a GPS IRIG-B time code signal from a GPS receiver or, if necessary, from the FSDPS. The time/date code generator decodes the IRIG-B signal for the exact date and time for the HCVR system use and also converts to an IRIG-E time code signal for recording. A battery backup unit with charger supplies power to the time/date code generator for 20 minutes minimum during power fluctuations or outages. The synchronizer supplies the exact date/time in parallel to as many as eight recorder/reproducer HCVR units. If additional recorder/ reproducer units are installed, all units beyond the eight in parallel must be daisy chained from one in parallel.

CAUTION: Daisy chained units have no protection from timing failures in units to which they are daisy chained.

(4) GPS Receiver. The HCVR system GPS receiver is connected by coaxial cable to its roof-mounted antenna. The GPS receiver receives from its antenna and outputs through another cable a continuous IRIG-B time code signal to the master synchronizer rear port labeled IRIG Input. The IRIG Input port is a 9-pin D style female connector.

Note: For HCVR systems delivered prior to August 1993, GPS systems may not be available. An ARTCC without an HCVR GPS system shall input to the master synchronizer the inter-range instrumentation group time code format B (IRIG-B) coded time output from the Flight Service Data Processing System (FSDPS). Without GPS or FSDPS time code signals available, the master synchronizer clock shall be set manually using a reliable time source.

(5) Status Indicator Unit. Each dual transport recorder/ reproducer unit is provided with a status indicator unit to display the ready, recording, and alarm status of its transport equipment. The status unit provides a visual and aural alarm upon malfunction of any equipment it monitors. The aural alarm can be disabled on the indicator front panel. Remote monitoring is achieved by locating the status indicator up to 500 feet from its recorder/reproducer unit. The status indicator unit cable plugs into a receptacle on the recorder/ reproducer unit midway up on the rear at the right.

b. Portable Reproducer System. The portable reproducer system reads one audio channel and its correlated time code channel from a 60 channel 1-inch HCVR tape and records both channels on a 2 channel tape cassette. The reproducer equipment consists of a playback 60 channel tape transport with a keypad for setup and control, an information compiler with a VU meter, and a dual deck 2 channel tape cassette recorder. Accessories include a separate foot controller unit for operational control of the tape transport, a mono headset to monitor the selected audio channel, and a carrying case with handles to transfer the portable system to another location.

(1) Playback Tape Transport. The playback 10-1/2 inch reel single tape transport reads 60 channel 1-inch magnetic tape previously recorded by an HCVR recorder/reproducer unit. The playback transport allows high speed reproduction of any one selected audio channel from the 60 channel tape. The selected audio channel and its correlated time code from the same tape are recorded at the same time onto separate channels on a C-60 or C-90 audio tape cassette. The two channel cassette recording is made for a legal record when required. All tape transport setup and operations can be controlled from its keypad. The Play, Stop, Rewind, and Forward operations also can be controlled for convenience by a foot controller unit connected via a ribbon cable.

(2) Information Compiler and VU Meter. An information compiler detects the presence of audio or signal information from the transport and can control the 2-channel dual deck cassette recorder to record only during the presence of audio or signal information. Controls are provided for adjustment of receiver sensitivity and a silence release time after which to discontinue recording. A phone jack labeled AUDIO, by the VU meter display, is used to connect mono headphones provided for the operator to listen to the selected audio channel during playback. The VU meter displays the audio level of the selected channel.

(3) Dual Deck Cassette Tape Recorder. The COTS dual deck cassette recorder contains two identical 2 channel tape cassette recorders in one unit. Either of the two cassette recorders records two channels at once, an IRIG-E time code on the right channel and an audio signal on the left channel, similar to stereo recording. This enables high speed production of one 2 channel C-60 or C-90 cassette tape or two identical cassette tapes at the same time. Also, information already recorded on one cassette tape can be copied to another other similar length, C-60 or C-90, cassette tape within the dual deck recorder.

Note: For a legal record, the system AGC must be turned off during any reproduction to preserve the original audio volumes.

(4) Foot Controller Unit. A foot controller unit allows basic operational control of the 60 channel tape transport and thereby of any reproduction from 60 channel tape. The foot pedal controller attaches to the rear of the reproducer unit via a 20-wire ribbon cable approximately 28 inches long.

(5) Headphones. The furnished set of mono headphones can be plugged into the AUDIO jack on the information compiler and VU meter panel. This allows the operator to monitor the selected audio channel during playback.

(6) Bulk Tape Degausser Unit. The Hewlett-Packard bulk tape degausser is a stand-alone unit for quickly and automatically erasing magnetic tapes for reuse. One 10-1/2 inch reel of tape is placed on the degausser hub in the open drawer. Closing the drawer starts the erasure process of rotating the tape twice through a magnetic field. Then the drawer opens slowly withdrawing the tape uniformly from the field. The degausser will erase a tape with coercivity of 325 oersteds in less than 60 seconds.

284. MATERIALS AND EQUIPMENT. A Magnasync/Moviola HCVR system in an ARTCC is comprised of both modular COTS equipment and special equipment mounted in cabinets or provided as ancillary equipment.

a. Recorder/Reproducer Cabinet. Each recorder/reproducer cabinet contains two COTS 10-1/2 inch reel transport 60 channel tape recorders mounted one above the other with a VU meter panel mounted between them. A COTS power supply is mounted in the bottom of each cabinet. The recorder/reproducer cabinet is 83 inches high, 26 inches wide, and 23 inches deep and has a plexiglas locking front door. One recorder/reproducer cabinet is designated the system maintenance spare. The system maintenance spare or an operating cabinet can have mounted, above the top recorder transport, the master synchronizer and GPS receiver required by the HCVR system.

(1) GPS Receiver Antenna. A roof location for mounting the antenna for the GPS receiver is site specific and must take into consideration the length of coaxial cable furnished with the unit.

(2) Status Indicator Unit. Cabled to the rear of each recorder/reproducer cabinet is a status indicator unit to report the status of the dual recorders. A status indicator unit is 3-1/4 inches high, 6-1/4 inches wide, and 2 inches deep. A four foot long cable is

supplied with each status indicator unit to display status at the unit. If remote monitoring is desired, a cable up to 500 feet total length shall be provided by the FAA.

b. Portable Reproducer Cabinet. A stand-alone portable reproducer cabinet contains a single playback 60 channel tape transport, a keypad for setup and control, a dual deck 2 channel C-60 or C-90 cassette tape recorder, and an information compiler and VU meter. The compiler and VU meter are mounted below the transport, between the transport and cassette recorder. Tape head assemblies are easily replaceable from the front of the cabinet. All electronic circuits are on modular plug-in cards for fast replacement. This equipment is housed in a 34 inches high, 24 inches wide, and 20 inches deep cabinet with a locking plexiglas front door. The portable unit weighs approximately 110 pounds. A foot pedal control connects to the rear of the reproducer via a 20-wire ribbon cable about 28 inches long.

c. Bulk Tape Degausser Unit. The COTS stand-alone Hewlett-Packard tape degausser unit accepts one 10-1/2 inch reel of 60 channel 1-inch tape. The degausser is 9 inches high (excluding mounting feet), 17 inches wide, 19-9/16 inches deep, and weighs 87 pounds. The degausser was provided with the portable reproducer equipment.

d. 60 Channel Recording Tapes. Each 10-1/2 inch reel contains 3600 feet of 1-inch wide, 1.0 mil base tape. The tape is moved at 15/32 inches per second to record continuously for 24 hours minimum. Twenty-two tapes are provided initially for each recorder/ reproducer unit.

e. Recording Tape Storage Cabinet. One or more locking storage cabinets for magnetic tape are required to accommodate 32 tapes for each recorder/reproducer unit. The size of this cabinet storage is site specific. The locking cabinets shall be provided from region site preparation funds.

f. Mixing Amplifiers. Mixing amplifiers for the ARTCC HCVR system provide audio through the VDF to matching 600 ohm termination ports on the HCVR recorder/reproducer units. Specifications of five types of mixing amplifiers already in use in FAA facilities were found able to satisfy HCVR system requirements. These mixing amplifiers are types FA-5249/1, FA-5461/1, FA-5553/1, FA-8198, and FA-9614 which uses FA-9615 base amplifier modules.

285. INSTALLATION. HCVR cabinets are normally installed on a raised floor and utilize under floor cabling. On a raised floor, the

cabinets shall be positioned at least 1-inch apart from each other to allow room for opening cabinet doors. Installation of cabinets and cabling shall be in accord with earlier sections in this chapter. ARTCC single point, multipoint, and protection grounding systems shall be utilized, and each grounding system shall be isolated from the other grounding systems as described in Chapter 4.

a. Cabinet Tiedown. HCVR recorder/reproducer cabinets are mounted on the control wing basement raised flooring to withstand seismic conditions in accordance with the Uniform Building Code (UBC-1985 ED). Each cabinet shall be attached to the raised flooring and to the subfloor utilizing four 3/8 inch threaded rods attached to subfloor mounted spring unistrut assemblies as shown in Figure 6-43, *Seismic Mounting of Equipment*. Portable cabinets need no tiedown.

b. Power Connection. Each recorder/reproducer unit shall be connected to a separate circuit breaker. Each unit requires 110-120 VAC, 60 Hz, 3 amp service from the ARTCC critical power bus. Critical bus under floor power cables must be continuous hard-wired connections in accord with FAA Order 6650.9, *Requirements for Area Control Facility (ACF) Under the Floor Cabling*. The total AC power load shall be balanced between power distribution boxes. The master synchronizer and the two transports in the maintenance spare cabinet shall receive AC power from the same power source. Plastic AC power outlets in the bottom of HCVR recorder/reproducer units shall be replaced with metal outlet boxes in order to attach ARTCC critical AC power flexible conduit.

c. Component Assembly. HCVR cabinets are shipped fully installed except for capstan flywheels and drive belts on all tape transports. Each record/reproduce transport flywheel uses a flat drive belt. Each audio search transport uses an O-ring drive belt. O-ring belts seat properly only when grooves on both the flywheel and drive shaft are in-line with each other. Therefore on audio search models, the flywheel groove shall be aligned precisely in-line with the drive shaft groove.

d. Software Programming. Software variables are set at the factory for correct functional operation of HCVR equipment. In Table 6-11, *HCVR Programmed Software Variables*, programmed variable settings are identified by function and format numbers required by recorder/reproducer units, portable reproducer units, and the master synchronizer. Function and format numbers for each unit shall be checked from the appropriate unit keypad using the following procedures before the unit is placed in service.

FIGURE 6-43. SEISMIC MOUNTING OF EQUIPMENT

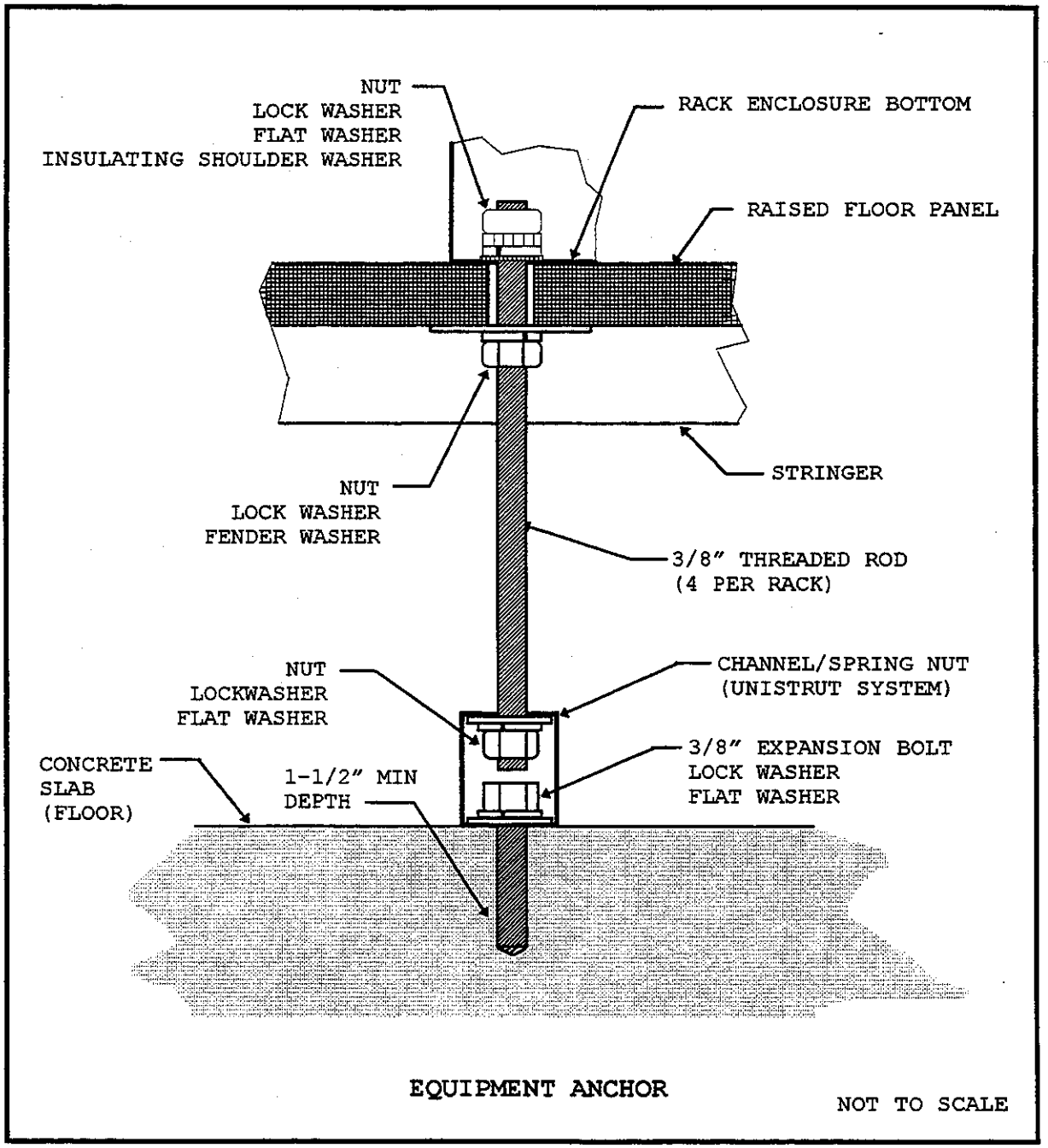

TABLE 6-11. HCVR PROGRAMMED SOFTWARE VARIABLES

FUNCTION NUMBER	RECORDER/REPRODUCER FORMAT NUMBER	PORTABLE REPRODUCER FORMAT NUMBER	MASTER SWITCH FORMAT NUMBER
1	1	1	1
2	2	2	2
3	1	1	2
4	6	6	2
5	2	2	2
6	2	2	2
7	2	2	1
8	1	1	X
9	2	1	X
10	1	1	X
11	1	1	X
12	1	1	X
13	2	1	X
14	2	1	X
15	1	1	X
16	1	2	X
17	2	1	X
18	1	1	X
19	1	1	X
20	2	1	X
21	1	1	X
22	X	1	X

NOTE: X signifies the function is non-existent

HCVR Function and Format Number Review Procedures

1) To view the recorder function and format numbers: press 3,1,4,<ENTER> and <DISPLAY TRANSFER> on the recorder/reproducer control panel **or** <DISPLAY PLAYBACK DATE> on the reproducer.

2) Enter a function number shown in Table 6-10 and press <ENTER>. The function number entered is seen on the left side of the recorder numeric display.

3) Verify that the format number displayed on the right side of the numeric display for the entered function number agrees with Table 6-10.

4) Press <CLEAR> two times.

5) Repeat steps 1) through 4) for all listed function numbers.

6) If any format number does not match Table 6-10 for its function number, the recorder must be reprogrammed for correct operation. Refer to the contractor provided instruction book for function and format number definitions and for programming requirements.

286. INTERFACE. Each HCVR recorder/reproducer unit requires an audio interface to receive audio from the VDF and a time code signal interface for the IRIG-E time code signal from the master synchronizer. The Master synchronizer interfaces with the GPS receiver to receive the IRIG-B time code signal from the GPS antenna. A third interface on each of these recorders connects its own status indicator unit.

a. VDF Interface. The VDF provides to each HCVR recorder/reproducer unit up to 60 channels of audio divided into three groups of 20 channels each with 2-wires per audio channel on each 25 pair

cable. Cables from the VDF have 50 pin male connectors on both ends and connect to the rear of the recorder unit on an adapter panel below the lower 60 channel recorder. The 50 pin to ribbon cable adapter panel provides parallel paths to the dual recorders for 60 channels via six 10 channel ribbon cables. The VDF has the capability of routing any audio channel to any recorder, including a spare recorder, and the HCVR 50 pin connectorized cabling should have ample length to allow patching to the spare recorder if necessary.

b. GPS IRIG-B Interface. The IRIG Input port is a 9-pin D style female connector on the rear of the master synchronizer. It is the input for the GPS IRIG-B coded time signal for the entire HCVR system. Pin 3 is grounded by a jumper, and pins 5 and 9 carry the time code signal. The master synchronizer converts the signal to IRIG-E format and then distributes in parallel the IRIG-E signal to 8 recorder/ reproducer units. Time code signals are provided to any additional units by daisy chaining serially from one of the eight parallel unit signals.

CAUTION: Daisy chained units have no protection from timing failures in units to which they are daisy chained.

c. Status Indicator Interface. A status indicator plug receptacle is located on the right hand side, mid-level, on the rear of each recorder/reproducer unit. Mounting of the status indicator units is site specific depending upon the location desired for viewing the status indicator panel units.

287.-293. RESERVED.

SECTION 11. DIGITAL VOICE RECORDER SYSTEM (DVRS)

294. GENERAL. All ATC position voice communications are recorded as a legal record required in case of aircraft accident or incident. A Denro DVRS is comprised of rack mounted recorder/playback equipment and separate reproducer equipment. The DVRS uses digital technology, requires fewer racks than the HCVR for the same recording capacity, and is easier to maintain. A DVRS utilizes the same modular 25 pair cabling as that installed between the VSCS recorder IDF and HCVR equipment. DVRSs will replace all HCVR systems in ARTCCs by year 2002.

295. EQUIPMENT CONFIGURATION. The Denro DVRS includes NiceLog Logger recorder/playback equipment and reproducer equipment. Typical elements of DVRS recorder/playback and reproducer equipment are shown in Figure 6-44, *DVRS Recorder and Reproducer Components*. The DVRS recorder is a computer controlled modular system that converts multiple channels of analog audio and a time code signal to digital compressed data files. The recorder maintains on-line the compressed digitized time coded files on a hard disk drive and archives the same files on a digital audio tape (DAT) cassette drive for permanent storage. The DVRS reproducer can retrieve compressed data files containing voice correlated to actual occurrence time and re-record simultaneously both the voice and its correlated time code as analog signals on a 2 channel analog audio C-60 or C-90 cassette tape.

a. DVRS Recorder. DVRS recorder/playback components are rack mounted and include multichannel digital recorder units (DRUs) with disk and tape storage drives, a computer workstation, a GPS receiver, a remote alarm, an Ethernet hub, and an uninterruptible power supply (UPS) to provide constant AC power during a voltage variation or interruption on the ARTCC critical bus. The required capacity of a DVRS recorder system to store voice communications can be expanded modularly to support from 16 to 1200 channels of analog audio signals by installing more DRU circuit card assemblies (CCAs) or more DRUs. However, the LAN cable length between the recorder and reproducer is limited to 300 feet maximum.

(1) Digital Recorder Unit (DRU). A DRU (also called a Logger) uses four types of custom lowest replaceable unit (LRU) plug-in CCAs. The CCAs are housed in the DRU standard rack mounted, 19 inch wide, industrial PC chassis. Together the custom CCAs digitize, process for storage, and compress audio and time code signals and also decompress and reformat retrieved data. The compressed digital data is recorded on-line as files on a hard disk drive in the DRU chassis.

FIGURE 6-44. DVRS RECORDER AND REPRODUCER COMPONENTS

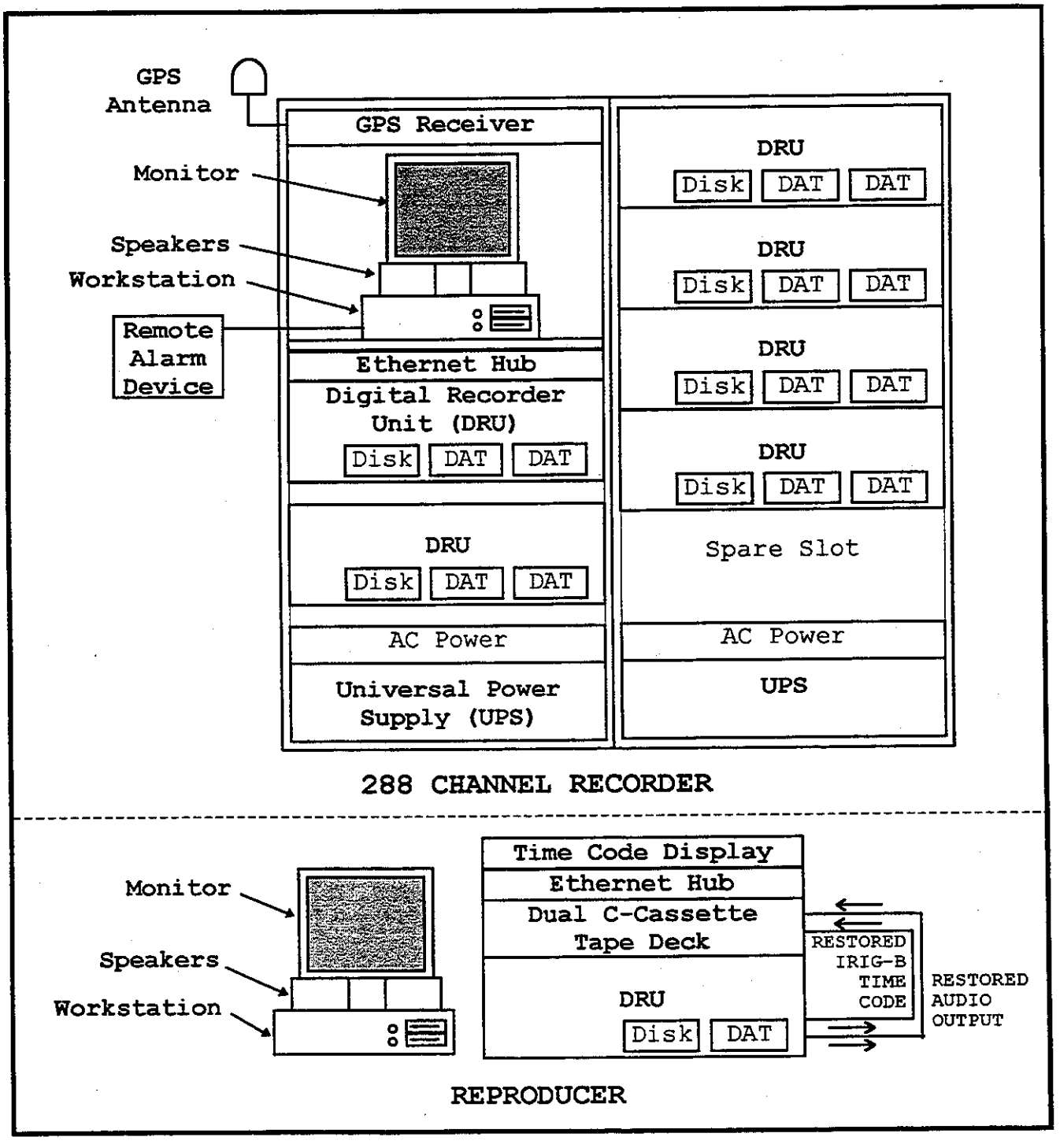

The same data files are archived permanently on a DAT cassette drive also in the DRU chassis. Each DVRS DRU chassis contains one hard disk drive, two DAT drives for continuous archiving, and a floppy drive. Retrieved data restored to analog format can be played back or monitored through a speaker or a headset connected to a speaker/headset jack on the Logger workstation speaker.

(a) Audio Line Interface (ALI) CCA. A DVRS DRU can house 1 to 3 ALI CCAs. Each ALI CCA contains 16 separate analog voice channel inputs. Three ALI CCAs receive up to 48 voice channels from the VSCS recorder IDF. Each ALI CCA is interconnected to its own dedicated audio digital interface (ADIF-II) CCA which receives the 16 analog audio channels from the ALI CCA. Figure 6-45, *DRU Audio Signal Flow Block Diagram,* shows the path voice traverses to digital storage and an analog speaker.

(b) Audio Digital Interface (ADIF-II) CCA. An ADIF-II CCA converts voice from analog to digital or digital to analog and compresses or decompresses PCM data as required. Analog voice signals from an ALI CCA are converted by the ADIF-II CCA to PCM digital data and output to the DRU audio processing array (APA) CCA. After signal processing by the APA CCA, the PCM data identified by its correlating time code and voice channel number is returned to the same ADIF-II CCA to be compressed for storage. Compressed PCM data retrieved from storage is restored to analog format by a similar path in reverse order. A PCM matrix array on the ADIF-II CCA provides real-time switching of any PCM input channel directly into one or more output channels. The ADIF-II CCA interfaces with a multi-vendor interface protocol (MVIP) 16 line digital bus which interconnects the DRU digital CCAs to exchange PCM data as required.

(c) Audio Processing Array (APA) CCA. The one APA CCA in each DRU applies algorithms to digital PCM voice signals to control the output audio AGC, to sum input channels into one channel, to quiet excess channel noise, and to prepare the PCM data for storage. An MVIP interface matrix in the APA CCA can combine or separate the 16 PCM lines of the MVIP bus. Also, the APA CCA can sum up to 4 retrieved recorded PCM voice channels for playback as one output channel or for playback as separate channels.

(d) Logger Auxiliary Function (LAF) and LAF Input/Output (I/O) CCAs. Interconnections with a LAF CCA are through its LAF I/O CCA. A GPS IRIG-B time code signal provides date, time, and clock synchronization to the ARTCC DVRS recorder system through a connection to one LAF I/O CCA in the DVRS recorder system. All DRU LAF I/O CCA

FIGURE 6-45. DRU AUDIO SIGNAL FLOW BLOCK DIAGRAM

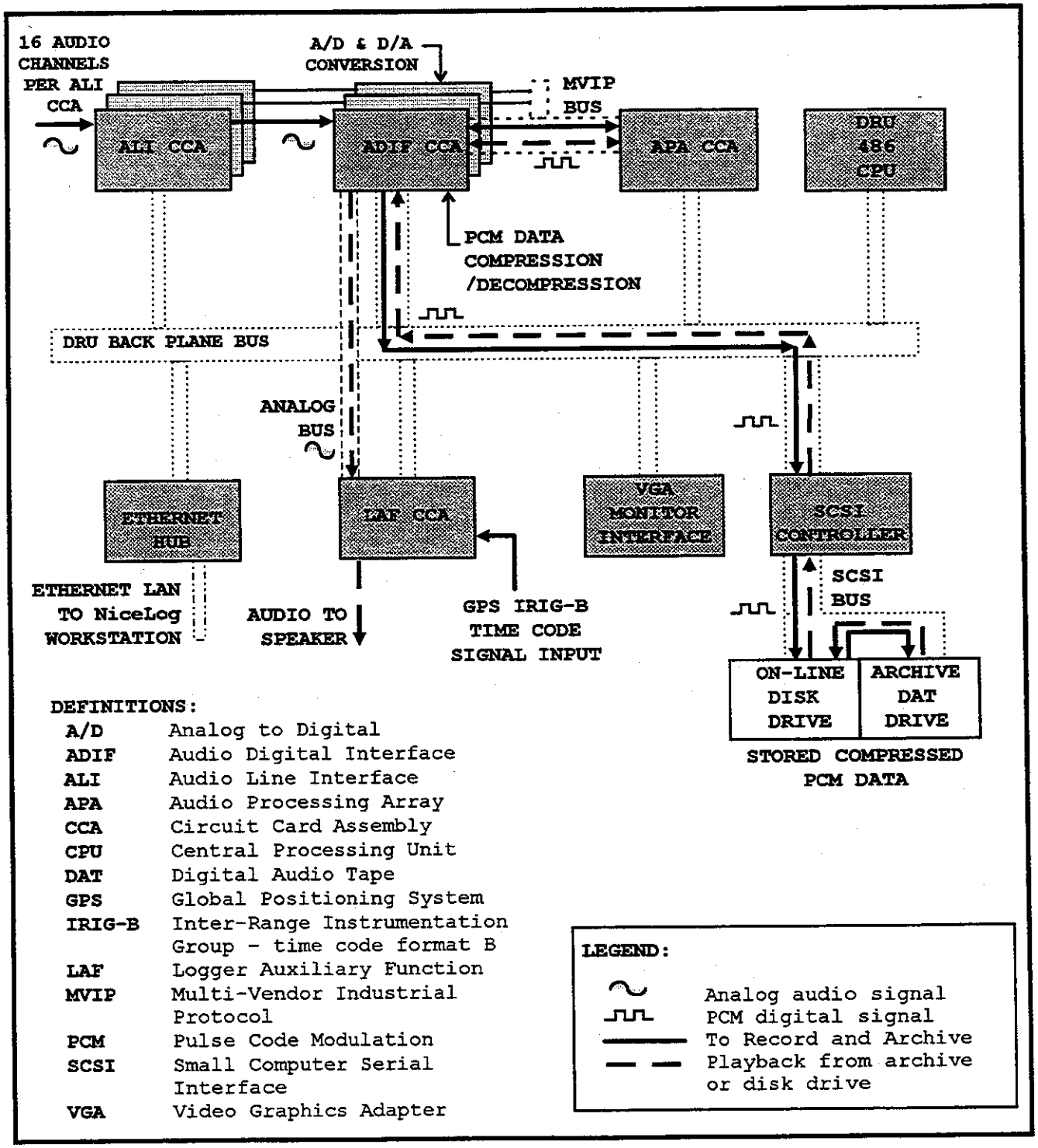

external clock inputs shall be daisy-chained together using coaxial cable and BNC T-connectors to fulfill the requirement for system synchronization to the same accurate time. The LAF CCA in each DRU provides the time code and clocking to its DRU. Also, the LAF CCA can output analog signals to 4 analog audio channel ports on the DRU.

(2) NiceLog Workstation. The NiceLog workstation is a 486 PC/AT computer. A VGA monitor and floppy disk drive are used only for initial system setup, software upgrades, and maintenance. Control of all DRU disk and tape drive functions is from the NiceLog workstation through a SCSI disk controller card. System operation is software controlled and is transparent to users. Only authorized users can connect to a Logger on the Ethernet LAN to record, playback, archive, or retrieve audio.

(3) Storage Drives. A one Gigabit (Gb) storage capacity hard disk drive is installed in each DVRS DRU as a storage media for managing on-line compressed digitized audio and time code files. The actual time used for 1 Gb of disk storage capacity depends upon the bit rate at which the data is recorded. The on-line compressed data files are quickly archived on a 4 Gb capacity DAT drive which uses a digital data storage (DDS-II) format. The DAT drive records as a permanent record all data files and allows playback of stored data files. Each DAT includes a directory containing compression rate, source channel, and start/stop times of recording to facilitate fast retrieval of any file.

(4) GPS Receiver. A GPS receiver includes a roof mount antenna and a 500 foot coaxial cable to receive the continuous GPS time code signal. The GPS receiver provides the analog GPS IRIG-B time code signal to the LAF CCA in only one DRU in a DVRS system. The one IRIG-B directly connected LAF CCA provides the accurate date/time code for system synchronization to all DRU LAF CCAs in the DVRS system through daisy-chained coaxial cables. In an ARTCC, if a DVRS GPS receiver signal is unavailable, an IRIG-B signal can be acquired from the FSDPS.

(5) Remote Alarm. A DRU LAF CCA shall be installed in the DVRS system NiceLog Supervision workstation to provide relays to activate an external alarm device. The LAF CCA contains two relays that close when an alarm condition is detected. A remote alarm can be audible or visual as desired.

Note: Relay action to operate an external alarm device shall not be provided directly from a LAF CCA in an on-line or backup recorder DRU.

(6) Ethernet Hub. The Ethernet hub in a DVRS recorder system enables communications between DRUs (Loggers) and their NiceLog workstation via an Ethernet LAN. An Ethernet CCA (adapter) is required in each DRU and in the NiceLog workstation to connect each LAN member to the Ethernet hub. The LAN uses Ethernet transmission control protocol/ internet protocol (TCP/IP) format.

b. DVRS Reproducer. DVRS reproducer equipment can be rack mounted or table mounted depending upon ARTCC preference. A reproducer includes an off-line multichannel DRU containing one disk drive and one DDS-II DAT drive for retrieval and reproduction only; a reproducer workstation computer with monitor, mouse, and speakers for Logger and interface control; an Ethernet hub; an analog 2 channel C-cassette tape deck; and a visual time code display. As in the recorder Loggers, the reproducer DRU contains the only custom equipment. All other equipment is COTS. A DVRS reproducer can retrieve selected digital files and restore them to analog format to record simultaneously both a voice channel and its correlated time code signal on analog 2 channel C-60 or C-90 cassette tape for a legal record or for training.

296. MATERIALS AND EQUIPMENT. Required quantities of materials for standard DVRS equipment are site specific and include mainly COTS materials and equipment.

a. Rack Enclosures. DVRS recorder rack dimensions do not exceed 68 inches high, 22 inches wide, and 26 inches deep. Two recorder racks are required for systems with 97 to 336 channels. Three equipment racks are required for systems with 337 to 432 channels. A DRU does not exceed 74 lb maximum. Floor loading from fully equipped DVRS DRU and reproducer enclosures should not exceed 175 lb/sq ft.

b. LRU Spares. Three spare CCAs for custom CCA LRUs in NiceLog DRUs are furnished at installation to the ARTCC. The three spare LRUs are for ADIF, ALI, and APA-4 CCAs. The other LRU spares provided initially to an ARTCC include one each COTS hard drive, CPU board, power supply, SCSI card, and VGA card. Sparing quantities will be adjusted as usage dictates.

C. Optional equipment. An additional Ethernet hub may be required if the Ethernet cable between the recorder and reproducer Ethernet hubs is longer than 300 feet or has discontinuities.

297. INSTALLATION. Original systems of Denro DVRS equipment are procured as turnkey installations and include a warranty period. ARTCCs are responsible for cross-connect wiring, input cables from the

VSCS recorder IDF, and any site specific cabling required exceeding standard cabling furnished with the system. Denro furnishes 500 foot cables for the GPS antenna and for the remote alarm.

a. AC Power. Because the voice recorders must provide a continuous legal record of ATC voice communications, the DVRS shall be connected to the ARTCC critical bus to maintain AC power at all times. Recorder equipment requires either 20 or 30 Amp service, depending upon the number of DRUs installed. Reproducer equipment requires only 15 Amp service. Also, the UPS in the DVRS recorder rack supplies power immediately when needed if the ARTCC critical bus power fluctuates.

b. Cables. All DVRS cables shall meet requirements in specification FAA-G-2100F. Cabling and wiring shall comply with NFPA-70. Any cables routed via a plenum shall have plenum rated insulation. The Ethernet LAN cable between the reproducer Ethernet hub and the recorder Ethernet hub shall be a direct run and cannot exceed 100 meters in length. Any discontinuity or cross-connect in the specified twisted pair cables shortens the allowed length by 50 feet per connection. Specified wire size shall not be reduced.

298. INTERFACE. A DVRS accommodates various types of analog interfaces to external ports on a DRU. A digital MVIP bus, internal to each DRU, provides interfaces to exchanges PCM data between digital CCAs in the DRU. The DVRS NiceLog system incorporates open system architecture protocols for interfacing applications.

a. Analog Interfaces. Each DVRS DRU contains interfaces to both input and output analog voice channels.

(1) Audio Inputs. Input analog audio interfaces can be set to accommodate high impedance 2-wire telephone inputs, high or low impedance radio or microphone inputs for summation, or full duplex 4-wire telephone inputs for summation to 2-wire inputs. Each ALI CCA provides interfaces to 16 input analog twisted pair voice channels from 50-pin female telco connectors on the backplane of the DRU. In the DRU, an analog bus ribbon cable provides an analog bus from connector P3 on each ALI CCA to connector JP600 on each ADIF-II CCA and to connector P1 on the LAF CCA to transfer analog signals.

(2) Audio Outputs. Output analog audio interfaces accommodate playback audio for monitoring through speakers or earphones or remote access via an optional remote playback unit to a remote telephone. Each LAF CCA provides analog audio output interfaces to four RJ-11

connector outputs on its DRU back plane. Identical analog audio can be output from two RJ-11 connectors simultaneously if desired.

b. PCM Digital Interfaces. Inside each DRU, PCM digital data is transferred via the internal MVIP bus between digital CCAs processing PCM data for storage or restoring retrieved PCM data to analog format. The Ethernet hub provides control of LAN interfaces and paths for PCM data traffic to or from DRU CCAs or storage drives. The LAN also carries PCM data between recorder and reproducer disk drives.

c. Remote Alarm Interface. Each Logger performs continuously a diagnostic built-in test (BIT) routine. It logs the results and, upon query, reports the operational status of its hardware, software, communications components, and audio input activity. Each Logger's test data is monitored by the NiceLog supervision workstation which can activate an audible or visual external alarm when a problem is reported. After a power interruption, all recording and archiving operations are re-initialized automatically to their prior status. No provision has been made for DVRS status reporting to the ARTCC RMMS.

d. Small Computer Serial Interface (SCSI). All SCSI devices in a DRU shall be daisy chained using a SCSI ribbon cable. The SCSI CCA shall begin the chain and the other end shall be terminated. SCSI devices in a DRU include the disk and DAT storage drives.

299.-307. RESERVED.

SECTION 12. RF COMMUNICATIONS EQUIPMENT

308. GENERAL. At an ARTCC, ATC RF communications equipment can include antennas, RF cabling, waveguide, and RF signal handling equipment. ARTCC RF installations include A/G radios tuned to international emergency frequencies and also can include BUEC A/G radios, RCL backbone microwave radios, and separate LDRCL microwave link terminals. Totally separate from ATC equipment, each ARTCC also houses a U.S. government National Radio Communications System (NARACS) terminal and antenna. NARACS is a high frequency (HF) single sideband (SSB) radio system to be used for national or regional disaster emergency communications when national communications are inoperable.

309. EQUIPMENT CONFIGURATION. ARTCC local ATC A/G radios are controlled through the VSCS and, except for ITT transceivers, also through RCE units to provide channel equipment status monitoring. Antennas and both control and remote RCE units for use by local radios are located at the ARTCC. Information on antenna systems for A/G radios, installation of antenna cabling, and RF path component details can be found in FAA Order 6580.3A, *Remote Communication Facilities Installation Standards Handbook*. An antenna relay, usually internal to the A/G transmitter, can allow a tx/rx radio pair to utilize the same antenna, which can ease channel maintenance. Transmitters may use an RF combiner to merge transmit RF paths to share a VHF or UHF antenna. Receivers may use an RF multicoupler to separate different frequency RF paths from a shared VHF or UHF antenna. Figures 6-46a through 6-46d show elements in typical RF cabling system paths between transmitters or receivers and their antennas, which can include coaxial relays, combiners, multicouplers, and RF line sections. Use of this equipment depends upon channel and site requirements.

a. Local A/G Emergency Frequency Equipment. In each ARTCC, dedicated local main and standby A/G transmitters and receivers are tuned permanently to the international emergency frequencies 121.5 MHz VHF and 243 MHz UHF. Both of these emergency channels are monitored continuously in each ARTCC.

b. Local BUEC Equipment. All BUEC radios are controlled through the VSCS. Local BUEC A/G transmitter and receiver pairs in an ARTCC use dedicated control and remote RCE units also located in the ARTCC. BUEC installations can include older BUEC transceivers, which require a BUEC priority module and BUEC processor, instead of RCE. Each BUEC channel controlled through a VSCS connects to both VHF and UHF radios on one channel as shown in Figure 6-41, *Comparison of a Primary Channel and a Sustaining-BUEC (S-BUEC) Channel*. A BUEC channel does not contain main and standby radios because a BUEC channel is a

FIGURE 6-46a. TYPICAL TRANSMITTER RF CABLING SYSTEM WITHOUT COMBINER

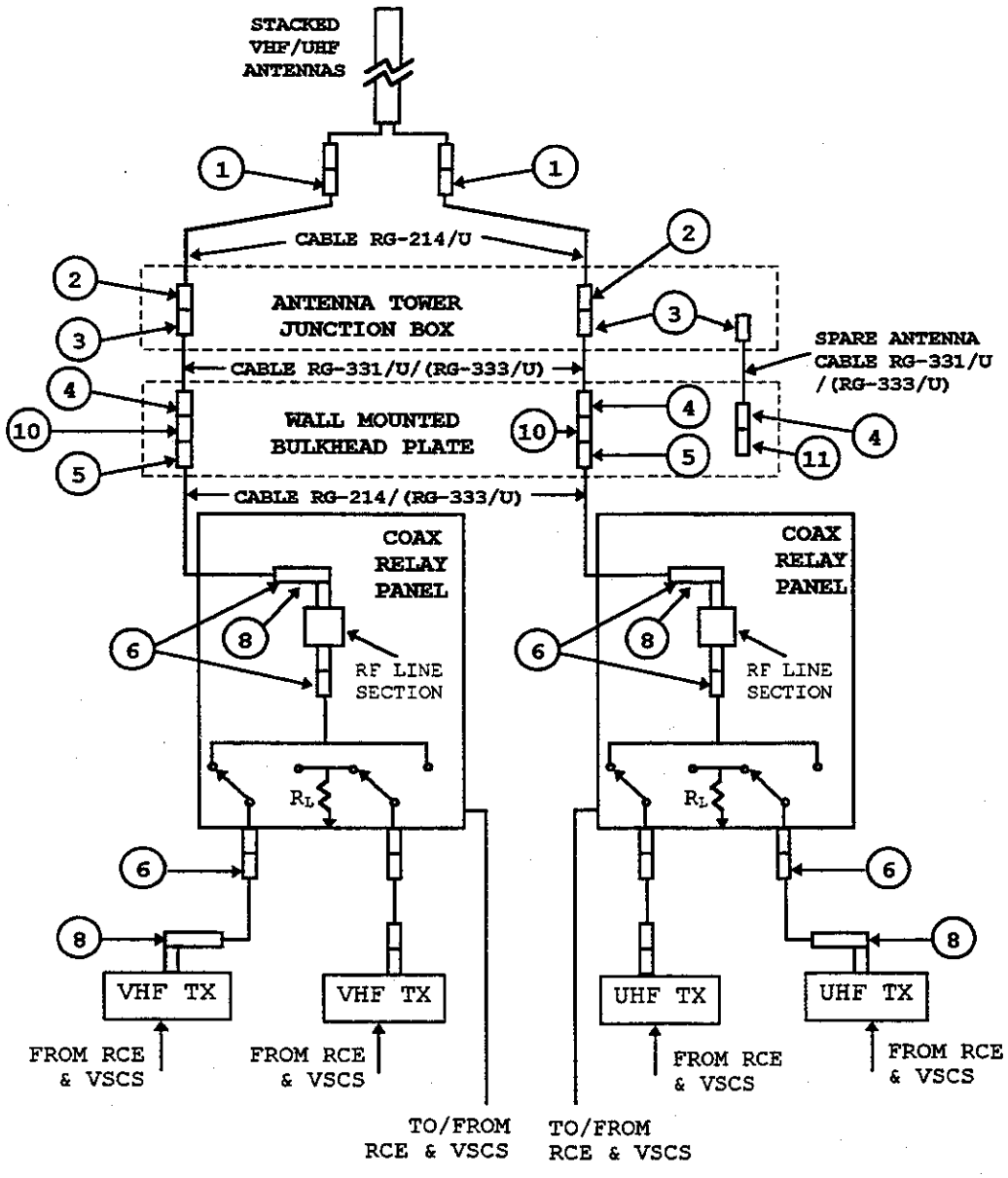

NOTE: See numbered callout descriptions in Table 6-12.

FIGURE 6-46b. TYPICAL TRANSMITTER RF CABLING SYSTEM WITH COMBINER

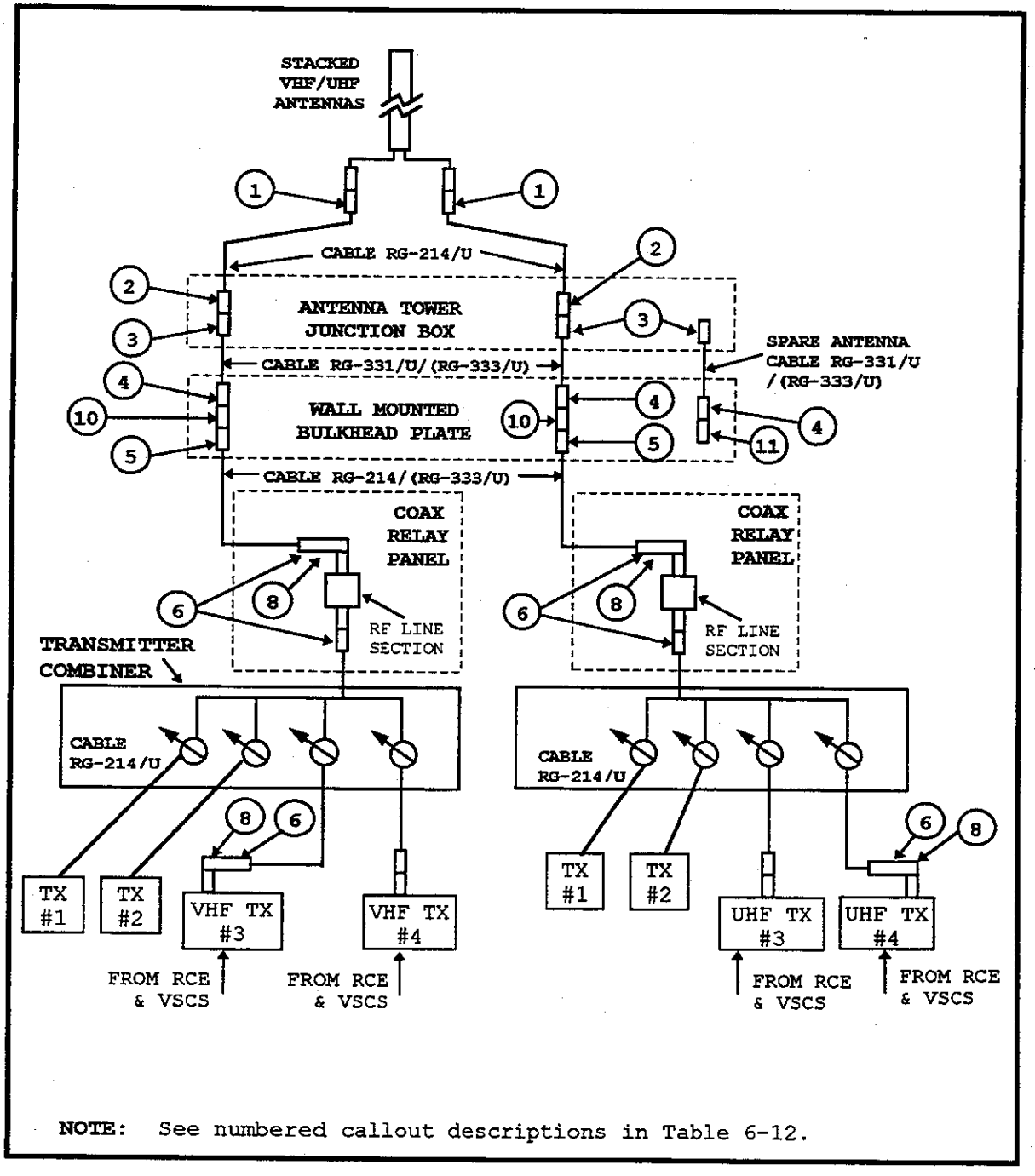

NOTE: See numbered callout descriptions in Table 6-12.

FIGURE 6-46c. TYPICAL RECEIVER RF CABLING SYSTEM WITHOUT MULTICOUPLER

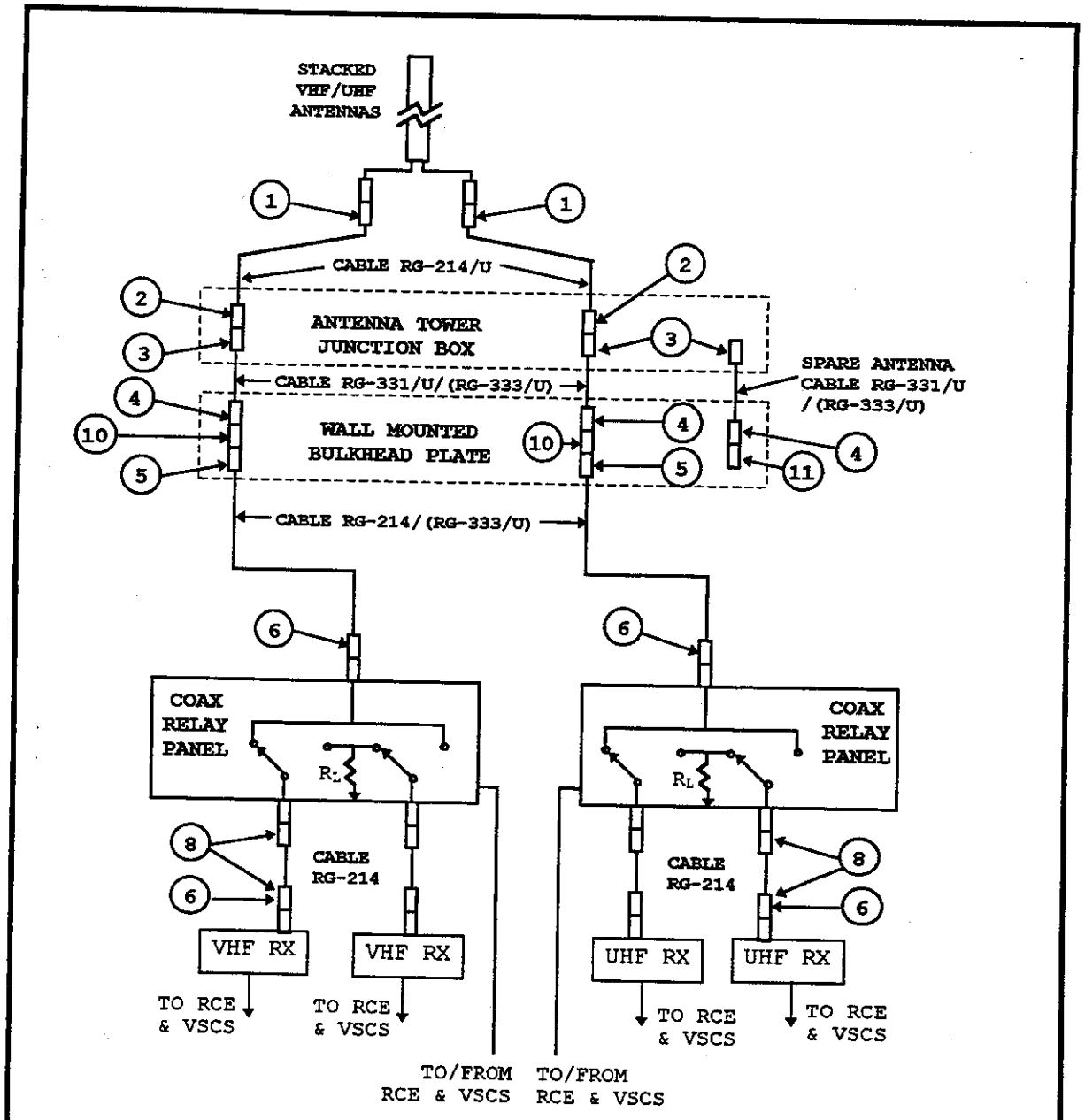

NOTE: See numbered callout descriptions in Table 6-12.

FIGURE 6-46d. TYPICAL RECEIVER RF CABLING SYSTEM WITH MULTICOUPLER

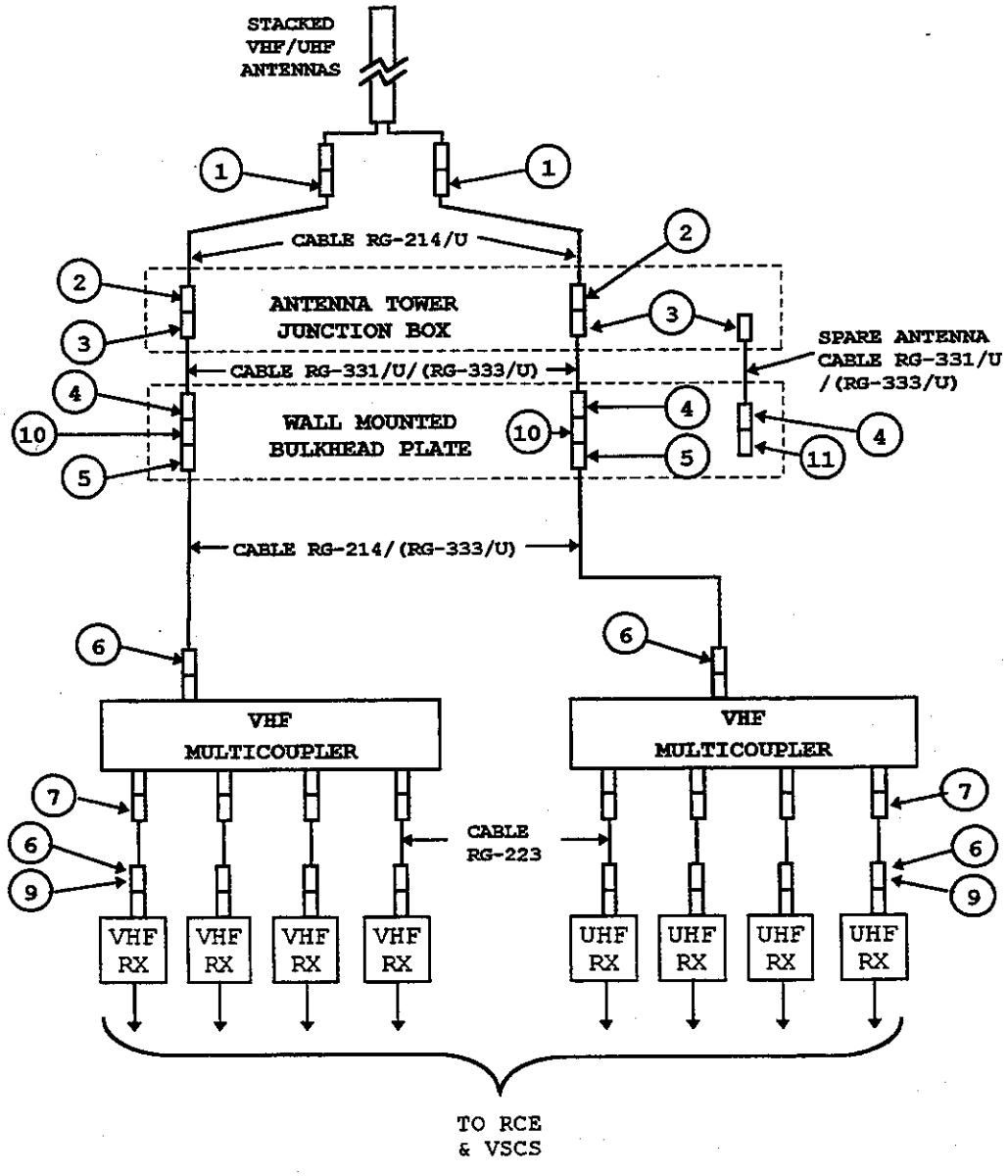

NOTE: See numbered callout descriptions in Table 6-12.

backup, not a replacement, for a primary main/standby channel. Refer to Section 9 of this chapter for details on installation of BUEC equipment.

310. MATERIALS AND EQUIPMENT. RF equipment specifications for typical A/G radios, antennas, and other major RF components are found in Appendix C of this handbook and in FAA Order 6580.3A. Types of microwave antennas, waveguide, and cabling for RCL and LDRCL systems are discussed in Section 8 of this chapter.

a. A/G Radios. ATC A/G analog radio installations, whether at an RCAG or an ARTCC, can include older ITT radios, which contain obsolete components, or newer Motorola radios. ITT A/G analog radios include AN/GRT-21 VHF transmitters, AN/GRR-23 VHF receivers, AN/GRT-22 UHF transmitters, and AN/GRR-24 UHF receivers. Motorola A/G analog radio models include CM-200VT VHF transmitters, CM-200VR VHF receivers, CM-200UT UHF transmitters, and CM-200UR UHF receivers. The nominal output power rating for the analog transmitters is 10 Watts. More channel output power can be provided where needed by the addition of a linear power amplifier (LPA) after each VHF or UHF channel transmitter, main, standby, or BUEC. Standard 50 Ohm impedance RF ports are furnished on all radios.

b. Antenna System. An antenna system includes the antenna and the RF path from the transmitter or receiver to the antenna. An RF component such as a combiner, multicoupler, RF line section, filter, circulator, or coaxial relay is used where needed to satisfy a specific channel or site requirement. In selection of RF components, channel frequency, required power, impedance match, path attenuation, interference, and criticality shall be considered. A standard VHF or UHF antenna for an ARTCC may be a half-wave, vertically polarized, omnidirectional dipole enclosed in a fiberglas radome. Certain ARTCC installations may need directional antennas to provide the coverage required or to avoid causing or receiving interference.

311. INSTALLATION. Before planning any RF installation at an ARTCC, all existing equipment in the affected areas shall be located. New equipment locations, RF paths, RF junctions, and grounding protection shall be planned carefully to avoid unnecessary disruption to existing systems. External equipment location shall consider height and placement of air terminals to provide ARTCC equipment, antennas, and the facility adequate protection from lightning. Lightning protection of structures is addressed in Chapter 4, Section 3 of this handbook. Complete planning is necessary for exterior antennas, structures, and exterior RF cabling and for interior A/G radios, RF path equipment,

and interior RF cabling. Table 6-12, *Antenna System Materials List,* describes typical materials used in Figures 6-54a through 6-54d.

a. Exterior RF Path Plan. The plan for the exterior RF path shall include the proposed antenna and tower or roof mount structure, an antenna coaxial cable junction box if required, paths of antenna coaxial cable transmission lines, and any exterior steel conduit path until the cables enter the building, preferably through PVC conduit. The plan shall include lightning protection for any exterior antenna structure and cabling; grounding for each exterior structure and steel conduit; and grounding of each coaxial transmission line shield and connector at the antenna tower platform coaxial cable junction box and/or tower or structure base. Refer to chapters 4 and 6 of Order 6580.3A for details on RF coaxial cable selection, installation of elevated and buried RF transmission lines, and antenna installation.

(1) Antennas. An omnidirectional dipole is normally mounted vertically and in-line with its mast. The antenna cable should be aligned along the mast and the least exposed part of the antenna structure in order to be protected as much as possible. If required for specific coverage, a unidirectional yagi antenna may be used. In Chapter 4, Figure 4-17, *Tower Grounding and Lightning Protection,* shows a typical RCL microwave antenna tower including details for antenna tower grounding.

(2) Tower Coaxial Cable Junction Box. The antenna coaxial cable junction box is normally located on the railing of the antenna tower platform. The weatherproof box provides an enclosure for transitioning from RG-214/U size cable between the antennas and the junction box to size RG-331/U (RG-333/U) or HELIAX cable between the tower junction box and the building interior patch panel or bulkhead plate. In the junction box, sufficient slack shall be allowed in each RG-214 antenna cable to be able to connect to the farthest transmission line connector in the box.

b. Interior RF Transmission Plan. The interior RF plan shall include a bulkhead plate on which to mount in-line feedthrough transient suppressors to be inserted in each coaxial cable transmission line immediately after entrance into the building. An antenna coaxial cable patch panel should be installed on the wall near the point where antenna cables enter the building. The plan shall include the location of all radio and RF equipment racks, interior routing of antenna system cables from the radio racks to the coaxial cable patch panel, and connections to ARTCC multipoint and single point grounding systems.

TABLE 6-12. ANTENNA SYSTEM MATERIALS LIST

ITEM NO.	CABLE TYPE	PART NUMBER	CONNECTOR CONTACT	SERIES	EQUIPMENT TYPE
1.	RG-214	UG-1185A/U	MALE	N	STRAIGHT PLUG
2.	RG-214	UG-1185A/U	MALE	N	STRAIGHT PLUG
3.	RG-331	CABLEWAVE 735001	FEMALE	N	STRAIGHT JACK
	RG-333	CABLEWAVE 735101	FEMALE	N	STRAIGHT JACK
4.	RG-331	CABLEWAVE 735001	FEMALE	N	STRAIGHT JACK
	RG-333	CABLEWAVE 735101	FEMALE	N	STRAIGHT JACK
5.	RG-214	UG-1185A/U	MALE	N	STRAIGHT PLUG
	RG-331	UG-147E/U	MALE	N	STRAIGHT PLUG
6.	RG-214	UG-1185A/U	MALE	N	STRAIGHT PLUG
	RG-331	UG-147E/U	MALE	N	STRAIGHT PLUG
7.	RG-223	UG-88C	MALE	BNC	STRAIGHT PLUG
8.	RG-214	UG-27	MALE	N	RIGHT ANGLE PLUG
	RG-214			BNC	RIGHT ANGLE PLUG
9.	RG-223	AMPHENOL 82-5370	MALE	N	STRAIGHT PLUG
10.		POLYPHASE IS-50	M/F	N	TRANSIENT SUPPRESSOR
11.	50 OHM	AMPHENOL 45650-51	MALE	N	STRAIGHT PLUG TERMINATION
12.	HELIAX,3/8"	ANDREW LDF2-50A			
		L2NM (=old L42W)	MALE	N	STRAIGHT PLUG
		L2NF (=old L42N)	FEMALE	N	STRAIGHT JACK
13.	HELIAX,1/2"	ANDREW LDF4-50			
		L2NM (=old L44W)	MALE	N	STRAIGHT PLUG
		L2NF (=old L44N)	FEMALE	N	STRAIGHT JACK
14.	HELIAX,7/8"	ANDREW LDF5-50A			
		L5NM (=old L45W)	MALE	N	STRAIGHT PLUG
		L5NF (=old L45N)	FEMALE	N	STRAIGHT JACK
15.	GROUNDING KIT	ANDREW 204989-22 or CABLEWAVE 713796-005	CRIMP-ON LUG, 36" LEAD		

NOTES: 1. Cables are 50 ohm impedance.
2. Connectors must be weather proof.

(1) Bulkhead Plate. A metal bulkhead plate is a grounded plate on which to mount lightning protection transient suppressors required in each antenna coaxial transmission line immediately after the coaxial cable enters a facility. The plate is grounded directly to the ARTCC earth electrode system ground to protect the facility, the internal RF equipment, and connected electrical equipment. Installation details are shown in Figures 4-27a and 4-27b, *Coaxial Transient Suppressor Mounting*, in Chapter 4 of this handbook.

(2) Antenna Patch Panel. An antenna patch panel allows manual switching of transmitters and receivers connected to antennas and can contain spare cables for emergency restoral, troubleshooting, or maintenance. The patch panel should be mounted at a convenient height to facilitate changing connections. Enough slack must be available in the coaxial cables from the radios to allow connection to any transition connection on the panel. Cables should be supported with cable grips and/or clamps to insure that the weight of the cables is evenly distributed.

312. INTERFACE. All ATC system RF radio equipment has standard 50 Ohm impedance matched coaxial ports for connection with 50 Ohm impedance coaxial cables. Use of cables having any other impedance will cause a mismatch and normally will attenuate or corrupt the signal unacceptably.

313.-326. RESERVED.

CHAPTER 7. SYSTEM TEST AND ACCEPTANCE

SECTION 1. EQUIPMENT ACTIVATION, TEST, AND CHECKOUT

327. INTRODUCTION. System test and acceptance at an ARTCC is accomplished by a sequence of efforts. First, equipment is installed and adjusted for specific usage and operation. Installation, power supply, grounding, and system operation are checked for compliance with standards and system requirements. Any interfering effect, such as EMI, caused by the system or received from any other ARTCC system must be corrected. Then complete system testing is performed and documented for system acceptance. Finally, commissioning requires formal acceptance of the new, restored, or relocated installation of the site, system, or service. Redlined drawings are used to update permanent ARTCC documentation to incorporate all verified changes. Affected maintenance procedures must be updated and new maintenance software versions must be documented.

328. GENERAL. Activation of equipment in an ARTCC requires baseline adjustments for specific usage of the equipment before system power up and the initial checkout of the system. Installation of the equipment and its performance shall be verified to be within system and ARTCC requirements prior to documented system testing. Formal acceptance is required for a new or expanded site, for new equipment installation, or for restoration of a service provided by previously established, new, or relocated equipment. Certification often is required to restore a service, commission a return to service, or commission a newly established service. Certification validates that the system is capable of providing the advertised service. Part of certification includes independent determination of when the system/subsystem/equipment should be continued in service, restored to service, or removed from service.

329. VOICE SWITCHING AND CONTROL SYSTEM (VSCS). Each ARTCC has a VSCS Site Activation Plan (SAP) which is site specific for the VSCS original installation. The SAP must be followed carefully during the original VSCS installation. Its standards can apply also for later changes in the VSCS installation along with system operational standards found in Order 6690.3, *Maintenance of Voice Switching and Control System (VSCS)*, and Order 6470.29A, *Maintenance of En Route Air-to-Ground Communications Facilities*. Verify that a VSCS Emergency Access Radio System (VEARS) has been installed to allow emergency controller A/G voice traffic to bypass the VSCS in case of VSCS catastrophic failure.

a. Activation Requirements. During activation of VSCS equipment in preparation for verification of system operations, specific system requirements shall be met at each VSCS interface.

(1) Interface Testing. All changed VSCS equipment, cabling, and terminations shall be relabeled with correct designators to facilitate circuit tracing. Testing VSCS communication channel interfaces includes the following types of signals for voice channels: transmit and receive A/G voice, radio control signals and status responses, audio for the voice recorder, telephone voice, and ARTCC intercom (IC) voice.

(2) VEARS Testing. Verify that the VEARS selection jackbox at each ATC VSCS console position has connectivity from the console directly to a radio control adapter (RCA) patch rack interfaced to the ARTCC primary channel control RCE units for each sector position. Verify that VEARS selection also connects directly to voice recorders to maintain legal recordings of voice communications. See FAA Order 6470.29A, Change 10, for procedures to check VEARS channels.

(3) VTABS Testing. To ensure availability of the ARTCC VSCS training switch for its limited VSCS backup capability, all VTABS communication channel interfaces also must be tested.

b. Documentation. The tested performance of each new or restored VSCS channel shall be recorded. Any changed or new physical interface connections and designators shall be recorded, and designators shall include rack, terminal block, connector, and terminal or pin numbers, as required. Redlined drawings showing all new or changed wiring paths and connection designators shall be furnished for use during system testing. After system acceptance, final redlined drawings shall be furnished to update ARTCC permanent documentation to show all changes in circuit paths and connection designators as well as any changes in VSCS equipment and installation.

330. MASTER DEMARC SYSTEM (MDS). ARTCC communication circuits must connect to the MDS in order to interface with communication links external to the ARTCC. The configuration of MDS wiring and jackfield racks is ARTCC specific. Interfaces with interfacility communication systems connected to the MDS shall meet all applicable standards and specific system requirements.

a. Zero Loss Lines (ZL^2). FAA policy requires the installation of zero loss lines having 0 dB nominal loss at 1000 Hz as the national standard for all future leased Telco circuits. To the extent possible, the reference zero transmission level point (0 TLP) will be

established at the MDS. For simplicity and to improve circuit signal to noise ratio (S/N), a 1000 Hz test tone at 0 dBm is the nominal signal power level measured at the 0 TLP at the MDS.

b. Activation Requirements. Verify that the installation of all MDS frames and equipment is in accordance with Chapter 6 in this handbook. If required for accurate transmission line testing, install ARTCC line conditioning equipment necessary to establish a 0 TLP reference at the MDS for interfacing external telephone lines.

(1) Lightning Protection. Verify that the MDS is protected from lightning voltage and current. When a new external interfacility communication line is installed or one is replaced, verify that the new cable is protected from lightning as described in Chapter 4. Only if a landline is properly protected by grounded guard wire or grounded conduit and the cable outer shield is properly grounded for lightning protection immediately before entering the ARTCC, can the landline circuits be connected to the MDS.

(2) Transient Protection. A transient suppressor shall be installed for each individual coaxial cable, landline circuit wire, and signal reference shield after it enters the ARTCC and before it interfaces on the MDS with any other ARTCC circuit. One example of a signal reference shield is the shield on a twisted wire pair. Coaxial cables use coaxial type transient suppressors. More details for transient suppressor installation are given in Chapter 4.

(a) Landlines. Verify that after entering the ARTCC and before connection to any ARTCC circuit, each entering landline cable has a separate transient suppressor installed for each individual circuit wire and circuit shield whose function is a signal ground reference. A shield that provides a signal ground reference, such as for a twisted pair, shall have only one end of the shield grounded to the ARTCC single point ground system immediately after its transient suppressor. Verify that the signal reference shield is isolated from any other ground system before it can be connected to the single point ground. Verify that the inner general protection shield on a double shielded landline is terminated on the ARTCC multipoint ground system immediately before transient suppressors protect each cable circuit wire and signal ground reference shield.

(b) Coaxial Cable. Verify that immediately after entrance into the ARTCC each coaxial cable has installed an appropriate in-line feed through transient suppressor to protect connecting circuits and equipment in the ARTCC from excess variations.

c. Documentation. While checking MDS circuit continuity, verify connection designators on MDS documentation or redline each new or changed communication circuit and connection designator. Circuits on the MDS must be grouped according to purpose or type, such as M/S A/G radio, BUEC A/G radio, PABX, G/G tielines, or RCL. Verify that circuits are wired in consistent channel order at similar termination junctions on the MDS racks. Consistent order facilitates circuit patching, testing, and trouble isolation from the MDS. Use final redlined documentation to update ARTCC MDS and applicable system permanent documentation after final acceptance of each system.

331. REMOTE RADIO CONTROL SYSTEM. The A/G radio remote control system for an ARTCC, its RCAGs, and its S-BUEC sites operates through CSTI RCE units. Control RCE units are located in the ARTCC and must interface with the VSCS and the MDS. Therefore, a control RCE unit can be tested independently without interfacility transmission line effects. Transmit voice and control signals can be injected into the interface at the VSCS through the RCE and monitored at the MDS, and receive signals can be injected back through the RCE MDS interface and monitored at the VSCS interface. Similar controlled testing can be performed at a remote site. The CSTI RCE system includes self tests and built-in diagnostics specifically for testing channel RCE operation. Both control and remote RCE units should be tested using manufacturer specific test guidelines and procedures.

332. REMOTE MAINTENANCE MONITORING SYSTEM (RMMS). Activation of an RMMS ARTCC Maintenance Center Console (AMCC) requires installation of current versions of software on the ARTCC RMMS Maintenance Processor Subsystem (MPS). In addition, determination must be made of the correct protocols, modem speeds, and interfaces to utilize for MPS polling of data from Remote Monitoring Subsystems (RMSs) and for MPS data exchanges with other types of RMMS MPS and terminal sites.

a. MPS Software. Two RMMS software programs run concurrently on each MPS. These programs are the Monitor and Control Software (MCS) or Interim MCS (IMCS) and the Maintenance Management System (MMS). Software is installed or updated only by authorized personnel using prescribed procedures.

(1) Monitor and Control Software (MCS). MCS has two segments with different functions. The applications segment handles operations for maintenance data terminal (MDT) log on, commands, and displays. The decoder segment provides processing for data transfers from specific RMSs to the MCS database on the MPS. Interim MCS (IMCS) software will be replaced with a later version of MCS software when a mature version is completed.

(2) Maintenance Management System (MMS) Software. MMS software allows gathered facility data stored in the MPS database to be used at sectors, work centers, regional offices, and FAA support organizations. Facility data includes equipment logs, performance reporting, periodic maintenance scheduling, and a profile data base for facility, service, and equipment. Also, MMS is the host for the National Airspace Performance Reporting System (NAPRS). Care must be taken to preserve databases. Follow-on MMS software may automate test equipment tracking and calibration, personnel certification and training, hardware discrepancy and program technical reports, modification tracking, inspection records, and maintenance projects.

b. MPS Interfaces. An MPS data transfer requires identical interfaces at the ARTCC MPS and at the remote end equipment. The type of remote end equipment dictates which type of matching interfaces are required for exchanging data with an RMS, another MPS, a fixed MDT and its printer, or a portable MDT, for example. Also, transmission requirements depend upon the interfacility link utilized, such as NADIN, PSTN, or DMN. Verify that correct protocols and interfaces are implemented. Be aware that the modem speeds described below may be increased in the future to accommodate new RMMS data capacity requirements.

(1) MPS to RMS. MPS polling of an RMS and the data returned from the RMS use NAS-MD-790 protocol. The RS-232-C interfaces require 2.4 kbps modems that are compliant with FED-STD-1005. The modems provide clocking. Transmission is over a synchronous, full-duplex, 4-wire channel.

(2) MPS to MPS. To exchange data or relay communications between MPSs via the DMN, a Tandem version of X.25 protocol with embedded interfaces at each MPS is utilized. Transmission requires synchronous, full duplex circuits. Data exchanges with the Headquarters MPS utilize DMN circuits which accommodate 9.6 kbps modems. All other MPS to MPS data transmissions will utilize 2.4 kbps modems and circuits until increased RMMS capacity dictates a need for faster data transmissions.

(3) MPS to MCC. The exchange of data between an MPS and an MCC, or AMCC in an ARTCC, utilizes proprietary protocol with Tandem MULTILAN through RS-232 interfaces. Transmissions require a minimum of 38.4 kbps circuit capacity which is supplied by the DMN.

(4) MPS to MDT/Printer. All MDTs use a proprietary Tandem 6530/6540 terminal protocol to communicate with an MPS. A remote MDT

can use an analog 2.4 kbps modem and an RS-266 interface for a circuit connection to the PSTN. An RS-232-C interface is used for a circuit connection direct to an MPS or to the DMN.

(a) MPS to Fixed MDT. In an ARTCC, a fixed MDT that is locally connected to the MPS operates asynchronously at 9.6 or 19.2 kbps. Its printer is connected locally to the MPS also. A remote fixed MDT interfaces with the MPS using a 4.8 kbps asynchronous circuit for the MDT and a 2.4 kbps circuit for its printer. A statistical multiplexer (STATMUX) or other asynchronous device used to multiplex the circuits must be capable of handling both the 4.8 kbps MDT circuit and the 2.4 kbps printer circuit. A 2.4 kbps modem operating with the STATMUX must be able to handle the asynchronous output received from the STATMUX.

(b) MPS to Portable MDT. A portable MDT can communicate with an MPS via a telephone circuit, either dial-up or direct connect, or through an RMS interface. For dial-up connections, a 2.4 kbps, asynchronous, half-duplex, 2-wire analog transmission line is required. Future speeds of 4.8 kbps are possible. Connections via the DMN using 4.8 kbps, asynchronous, half-duplex digital transmission lines are provided at designated field sites.

(5) MPS to NADIN PSN (NADIN II) Node. An internal ARTCC interface can provide RMMS data to an ARTCC MPS directly connected by a 13-pair cable to a National Airspace Data Interchange Network (NADIN) packet switched network (PSN) node. The MPS end of the cable requires an RS-232-C interface. The NADIN II end requires an EIA-530 or V.35 interface. Local/remote loop back and test mode are not required. Protocol and transmission requirements are NADIN specified.

333. TELECOMMUNICATIONS. ARTCC telecommunications equipment, such as VSCS ATC console equipment, NADIN concentrator and node equipment, DMN equipment, modems, and interfaces to PSTN, LINCS, or RCL interfacility links require precise setup for proper operation. Equipment must be adjusted and installed in compliance with applicable system standards and interface requirements. Baseline setup of line conditioning at the MDS, amplifier settings, frequency tuning, controller position activation, RCE or modem setup, and other adjustments may be required to activate specific systems. Using specifications from system manuals, verify that all requirements for correct system operation are met before beginning system acceptance tests.

a. NADIN MSN (NADIN I). Message traffic between a NADIN message switched network (MSN) concentrator in an ARTCC and one of two NADIN MSN switches, located in Atlanta and Salt Lake City Network Control

Centers (NCCs), requires protocol and transmission requirements different from those for message traffic with a user. Verify that NADIN concentrator and NADIN MSN switch and/or special user system requirements are met before beginning NADIN I system acceptance tests for the ARTCC.

(1) MSN Concentrator to MSN Switch. Message exchanges between an ARTCC MSN concentrator and an MSN switch use protocol requirements in FED-STD-1003A/FIPS PUB 71 for asynchronous balanced mode with options 2 and 8 for link layer. Network layer protocol is unique to NADIN I. Each concentrator to switch link requires two full period, full-duplex, asynchronous, 9.6 kbps data channels, each having 99.999% reliability. In addition, automatic dial backup at 4.8 kbps is required for each channel. AT&T Digital Data Service (DDS) is the primary transmission medium for 9.6 kbps exchanges with NADIN I switches. Analog transmission lines require D2 line conditioning. Each channel to an MSN switch requires an RS-232-C interface. Modems require local/remote loopback and test mode capabilities.

(2) MSN Concentrator to User. MSN concentrator interfaces with users, protocol, and modem speed are based on user equipment capabilities. Message format and maximum message size is stated in the applicable interface control document (ICD). User signaling speed ranges from 75 baud to 9.6 kbps; therefore, be sure that the modems provided accommodate specific user requirements.

b. NADIN PSN (NADIN II). Different protocol and transmission requirements are used for NADIN II packet switched data exchanges between an ARTCC PSN backbone node and another PSN backbone node, a user, or a PSN/MSN gateway in Atlanta or Salt Lake City. Specific requirements and standards for the NADIN PSN are found in the latest versions of FAA Order 6600.26A, *National Airspace Data Interchange Network (NADIN) II Program Implementation Plan*, Specification FAA-E-2770d, *National Airspace Data Interchange Network (NADIN) Packet Switched Network (PSN)*, applicable NADIN II IRDs, and the following information.

(1) PSN Node to PSN Node. In each ARTCC, the NADIN II PSN backbone node uses ITU-TSS X.25 (1984) protocol for all connected backbone trunks. Each PSN backbone node requires full-duplex links to at least two other PSN backbone nodes. LINCS, leased from MCI, provides 56 kbps (64 kbps maximum) full-duplex data channels (trunks) between nodes. Satellite links in the diverse PSN backbone system use modulo 128 sequence numbering to provide high link-level service.

(2) PSN Node to Users. Protocol and transmission requirements for specific users are defined in the NADIN PSN X.25 Packet Mode Users Interface Control Document (ICD). NADIN II acts as the data circuit-terminating equipment (DCE) and provides the clock. Physical layer interfaces can be EIA-232-C/D, EIA-530, or V.35 as needed to provide transmission over local cable or via modems using dedicated Telco lines.

(3) PSN Node to MSN Gateway. An interface established at the NADIN PSN node in each ARTCC provides for data exchanges between the PSN node and the MSN gateway in Atlanta or Salt Lake City. Protocol required is FED-STD-1003A/FIPS PUB 71 and FIPS PUB 78 for asynchronous balanced mode with options 2 and 11 implemented. Maximum frame size is 2000 bits. The 9.6 kbps link is full-duplex. Alphanumeric text, with binary information included in the text, can be exchanged. Maximum message size is 3700 characters. There are no backbone link requirements for a direct connection between an internal ARTCC user and the PSN node to MSN gateway interface also in the ARTCC, but a special cable with EIA-232-C/D interface characteristics is provided as NADIN II equipment for the connection. Synchronization for the direct cable interface is provided by the PSN node. Use of limited distance modems or active converters may be required.

c. Data Multiplexing Network (DMN). DMN phases I and II connected ARTCC, radar, beacon, terminal control, and other FAA facilities to the DMN. Phase III adds a statistical time division multiplexing (STDM) network and deterministic time division multiplexing (DTDM) modems. Requirements for DMN Phase III equipment are found in the latest versions of Specifications FAA-E-2786, *Data Multiplexing Network Equipment* Specification, and FAA-E-2860, *Data Multiplexing Network - Statistical Multiplexers (STDM)*, FAA Order 6170.11, *The Data Multiplexing Network Phase III Deterministic Time Division Multiplexing Equipment Project Implementation Plan*, and Order 6170.12, *The Data Multiplexing Network Phase III Statistical Time Division Multiplexer Equipment Project Implementation Plan*, and the following information. Verify correct interface usage, equipment installation, and standards compliance before beginning DMN node acceptance testing at an ARTCC.

(1) Interface Requirements. DMN nodes in all facilities use RS-233 or EIA-530 interface characteristics.

(2) Transmission requirements. All DMN data transmissions use voice grade channels. Leased lines for 19.2 kbps modems require D1 line conditioning. ARTCC external data exchanges use multiplexing modems on synchronous transmission paths or statistical multiplexers

on asynchronous transmission paths. ARSR sites use only synchronous transmission with ARTCCs.

(3) Backup Channel Provisions. For ARTCC to ARTCC DMN transmissions, channel backup is provided via a shared remote path and fallback switches. For DMN transmissions between an ARTCC and a TRACON or the FAA WJHTC, access to the PSTN is required for channel backup. For DMN transmissions between an ARTCC and an ATCT, access to the PSTN may be required for a backup channel.

d. RCL and LDRCL. RCL and LDRCL equipment at an ARTCC consists of COTS equipment designed for continuous operation. To activate new or replacement equipment for the ARTCC RCL node or an LDRCL terminal, requirements and standards in the RCL and LDRCL system specifications and in specific equipment operation documents shall be met. Refer to latest versions of FAA specifications FAA-E-2749, *Radio Communications Link (RCL), and FAA-E-2853, Low Density Radio Communications Link,* and FAA Order 6540.5A, *Maintenance of Radio Communications Link (RCL) Systems,* and Order 6540.8, *Low Density Radio Communications Link Project Implementation Plan,* for system requirements and test procedures. All adjustments necessary for proper system operation shall be made before beginning system acceptance tests.

e. LINCS. Each ARTCC contains a high capacity LINCS backbone node in the interfacility leased MCI transmission network. High speed T1 carriers are used in place of multiple interfacility Telco wires. A T1 line carries up to 24 voice grade channels on one full-duplex carrier.

(1) ARTCC LINCS Node. ARTCC node equipment includes channel banks, high capacity multiplexers, data service units and channel service units, all of which are customer premises equipment (CPE) for which the ARTCC is responsible. Each analog signal is digitized using pulse code modulation at 64 kbps. The digital signals then are time division multiplexed into one serial channel to interface with a full-duplex carrier at rates from 1.536 Mbps to 2.4 kbps. There is no LINCS interface protocol requirement. Verify that specific ARTCC channel and multiplex equipment requirements and all interface requirements are met for each LINCS node installation before specific LINCS node or channel acceptance testing is performed.

(2) LINCS Network Requirements. The LINCS interfacility 1.544 Mbps high capacity T1 carrier backbone network and any lower capacity LINCS carriers are maintained by MCI. Multiplexed digital data is transmitted in a serial bipolar stream on LINCS carriers. In Chapter 6, industry standards for various carrier types are listed,

and the hierarchy for time division multiplexed digital signals is shown as a reference for meeting LINCS network requirements.

334. BACKUP EMERGENCY COMMUNICATIONS (BUEC). An A/G BUEC site in an ARTCC may contain older frequency agile BUEC transceivers or newer fixed frequency transmitters and receivers. The newer BUEC A/G transmitters and receivers are identical to ATC A/G radios used as primary channel equipment. For information on correct setup and testing of BUEC equipment, see Order 6500.9A, *Maintenance of Backup Emergency Communication (BUEC) Facilities*, and Order 6470.29A, *Maintenance of En Route Air-to-Ground Communications Facilities*. Each BUEC channel must meet system requirements before acceptance testing begins.

a. BUEC Radio Equipment. For BUEC radio selection through a VSCS, BUEC transceivers require use of a BUEC processor and BUEC priority module. BUEC transceivers cannot operate through RCE units. Newer BUEC A/G transmitters and receivers tuned permanently to a specific sector frequency operate through CSTI RCE units identical to those in ATC A/G primary channels. Activation of BUEC equipment includes verification of frequency tuning and settings for A/G radios and for RF path equipment such as factory tuned combiner cavities.

b. Antenna System. To provide required sector area coverage and to avoid RFI, an antenna must be checked for appropriate frequency usage and compliance with any directional requirements for the mounted antenna elevation and transmit power level. Verify that all BUEC channel cabling, RF path, and antenna equipment is properly installed and grounded in compliance with all ARTCC grounding systems.

335. HIGH CAPACITY VOICE RECORDER (HCVR). For activation of a Magnasync/Moviola High Capacity Voice Recorder, interfacing and signal level settings must be checked for each recorder. Requirements for setup and testing of an HCVR are found in the High Capacity Voice Recorder Installation Plan, the *Specialist Plus Instruction Book* and the *Specialist Plus Quick Reference User's Guide* (both by Magnasync), and FAA Order 6670.4D, *Maintenance of Multichannel Recorder Equipment*. Verify the operation of each channel before beginning system acceptance tests.

a. Channel Input Impedance. If an older 152 channel voice recorder system is operating in parallel with the HCVR, the effective combined parallel input impedance is the required 600 ohms. If an HCVR operates alone, without a 152 channel system in parallel, verify that a 600 ohm resistor is installed across each voice channel input to reduce the built-in HCVR 10,000 ohm input impedance to 600 ohms.

b. Voice Channel Level. Set the output level of each mixer amplifier to -10 dBm for normal operation. All HCVR channels must be strapped internally for 0 dBm.

c. Time Source Interface. Check that the GPS time code source (IRIG-B) is connected to the master synchronizer and that the master synchronizer is daisy chained to each transport cabinet. Verify that all transports are synchronized to the master synchronizer.

336. DIGITAL VOICE RECORDER SYSTEM (DVRS). Setup and testing for the NiceLog Digital Voice Recorder System is described in the *Operations and Maintenance Manual for Digital Voice Recorder System* supplied by Denro. The same -10 dBm mixer amplifier output level and GPS time code source required for the HCVR system applies for the DVRS. Installation is site specific and all channel adjustments must be made before system testing is performed.

CAUTIONS: To protect the hard drive from crashing, the DVRS must **not** be moved or powered down while operational. Also, a tape cassette in a DAT drive must be ejected via software, **not** via the manual eject button.

337. RF COMMUNICATIONS EQUIPMENT. International emergency frequency A/G radio channel equipment is located at each ARTCC. Setup of the ARTCC local RF equipment requires accurate frequency tuning to 121.5 MHz VHF and 243 MHz UHF for the radios and RF equipment. These local fixed frequency A/G transmitters, receivers, and RCE units at the ARTCC are identical to ATC radios and control equipment used in primary A/G channels. Installation of emergency system equipment must be in compliance with all ARTCC standards and system RF requirements. Because local radio equipment channels do not terminate on the MDS, equipment testing must be performed from other ARTCC interface points. Performance can be checked in accordance with Order 6470.29A, *Maintenance of En Route Air-to-Ground Communications Facilities*, before system acceptance testing begins.

a. Radio Equipment. For emergency radio selection through a VSCS, local A/G transmitters and receivers tuned permanently to the international emergency frequencies operate through RCE units identical to those in A/G primary channels. Activation of equipment includes verification of correct frequency tuning and setup of radios and of RF path equipment such as factory tuned combiner cavities.

b. Antenna System. For a new antenna system or a new frequency to provide required sector area coverage and to avoid RFI, the antenna installation must be checked. Using operational frequency and

transmit and receive power levels, show compliance with any directional requirements for the mounted antenna elevation. Verify that all local channel cabling, RF path, and antenna equipment is properly installed and grounded in compliance with ARTCC grounding system requirements before acceptance testing begins.

(1) Transmit Antenna System Test. Verify the connectivity of an ARTCC local transmit antenna system. For each local transmit system tested, tests performed and test results shall be identified and documented separately for each transmitter.

(a) RF Path VSWR. Adjust its RF path length for the optimum voltage standing wave ratio (VSWR) at the transmitter channel frequency. If the RF path is from a combiner, the VSWR shall be adjusted to be the best possible VSWR for all transmit frequencies on that antenna. Transmit antenna system performance is measured from the RF line section at the output of the coaxial transfer relay or transmitter combiner in the transmit RF path under test.

(b) Local Control. The transmitter shall be under local control during this test. If the transmitter connects to a combiner, all four transmitters on the combiner shall be under local control. Each combiner frequency shall be used to test the antenna system. **CAUTION:** Testing shall not interfere with other communications.

(2) Receive Antenna System Test. The connectivity and performance of each ARTCC local receive antenna system shall be verified. Tests performed and test results shall be documented for each local receive antenna system and receiver.

(a) RF Source. Normally for testing, the RF source is the channel transmitter already tuned to the same frequency and operating on the same A/G channel as the receiver. Put the RF source transmitter under local control. If the transmitter connects to a combiner, all four transmitters on the combiner shall be put under local control to allow use of the transmit antenna system for testing. **CAUTION:** Testing shall not interfere with other communications.

(b) RF Path Test. Disconnect the receive antenna RF path cable at the input to the receiver coaxial transfer relay or at the input to the multicoupler, whichever applies. Refer to Figures 6-54 a-d for typical transmitter and receiver antenna cabling systems. Then connect that receive antenna RF path cable end to the RF line section output port in the transmit antenna system of the RF source transmitter. Verify the receive antenna system RF path connectivity by testing it as a transmit antenna system at the same frequency.

(c) Receiver Testing. Inject a test signal modulated on the channel frequency carrier into the receive RF path coaxial relay input or multicoupler input port from which the receive antenna RF path cable was removed originally. By observing the same RF test signal on test equipment connected to the receiver output or headset port, performance and connectivity of the receiver can be verified.

338.-346. RESERVED.

SECTION 2. SYSTEM ACCEPTANCE

347. GENERAL. This section provides a brief description of the events associated with the acceptance of a new or expanded site or acceptance of restored service provided on an established, relocated, or collocated communications channel.

348. CONTRACTOR ACCEPTANCE INSPECTION. The Contractor Acceptance Inspection (CAI) is a formal inspection by the on-site Technical Officer Representative (TOR) and the contractor to certify the work accomplished by the contractor. It is the responsibility of the contractor to correct any discrepancies found during this inspection. The contractor is relieved of all obligation concerning the work after the TOR accepts the work by signing the CAI.

349. JOINT ACCEPTANCE INSPECTION. The Joint Acceptance Inspection (JAI) is a required inspection by the TOR and the Airway Facilities (AF) representative. The JAI is performed prior to the commissioning and/or return to service of an established, relocated, or collocated communications channel in accordance with FAA Order 6030.45, *Facility Reference Data File*.

a. Joint Acceptance Inspection Report Checklist. The JAI report cover sheet and associated six-page JAI report checklist contain representative data required for each ARTCC CAI and JAI. FAA Order 6030.45 provides further guidance and distribution requirements for this report.

b. Joint Acceptance Inspection Report Exception List and Clearance Record. The JAI Report Exception List and Clearance Record lists all exceptions on the JAI checklist and the status of each exception. All major exceptions listed shall be resolved prior to the commissioning or restoration of service. Exceptions shall not violate existing applicable agency orders, technical instruction manuals, or accepted standard practices.

350. TECHNICAL REFERENCE DATA. FAA Form 6030.45-16, *Technical Reference Data Records Cover/Transmittal Sheet*, and FAA Form 6030.45-17, *Technical Reference Data Record*, are used as representative documents to record the initial performance of all ARTCC facility systems and equipment. Instructions for completing the forms are contained in the current version of FAA Order 6030.45.

351. TECHNICAL PERFORMANCE RECORD. FAA Form 6600.6, *Technical Performance Record, VHF/UHF Air/Ground Receiver/Transmitter*, is filled out in accordance with the current version of FAA Order 6000.15A,

General Maintenance Handbook for Airway Facilities, to document the initial performance results. The initial parameters to be recorded are identified in FAA Order 6580.5, *Maintenance of Remote Communications Facility Equipment*.

358.-366. RESERVED.

APPENDIX 1. ACRONYMS

Acronym	Definition
AAS	Advanced Automation System
AC	Alternating Current
ACCC	Area Control Computer Complex
ACF	Area Control Facility
ACORN	Advanced Computer Resource Nucleus
ACR	Adjacent Channel Rejection
ADAS	Automated Data Acquisition System
AFSS	Automated Flight Service Station
A/G	Air to/from Ground
AGC	Automatic Gain Control
ALC	Automatic Level Control
ALTE	Automatic Line Test Equipment
AM	Amplitude Modulation
AMCC	ARTCC Maintenance and Control Center
AMSS	Aeronautical Mobile Satellite System
ANMS	Automatic Network Management System
ARMS	Airport Remote Monitoring System
ARQ	Automatic Repeat Request
ARSR	Air Route Surveillance Radar
ARTCC	Air Route Traffic Control Center
ARTS	Automated Radar Terminal System
ASOS	Automated Surface Observing System
ASR	Air Surveillance Radar
AT	Air Traffic
ATC	Air Traffic Control
ATCT	Air Traffic Control Tower
ATM	Air Traffic Management
ATN	Air Traffic Network
AWG	American Wire Gauge
AWOS	Automated Weather Observing System
BB	Baseband
bps	bits per second

Acronym	Definition
BEM	Bus Expansion Module
BER	Bit Error Rate
BIU	BUEC Interface Unit
BTM	Bus Termination Module
BUEC	Backup Emergency Communications
BusLAN	Bus Local Area Network
BWM	Bandwidth Manager
CAI	Contractor Acceptance Inspection
CAT-X	Categorical Exclusion
CBI	Computer Based Instruction
CCA	Circuit Card Assembly
CCB	Configuration Control Board
CCCH	Central Computer Complex HOST
CCITT	Consultative Committee for International Telegraph and Telephone (now ITU-TSS)
CCL	Channel Controller Local
CCR	Channel Controller Remote
CD	Common Digitizer
C-DCE	Control-Dual Channel Enclosure
CDF	Combined Distribution Frame
CERAP	Combined Center Radar Approach Control
CFCF	Central Flow Control Function
CI	Configuration Item
CM	Configuration Management
CMS	Centralized Maintenance System
CMT	Centralized Maintenance Terminal
CNS	Communications, Navigation, and Surveillance
CONUS	Contiguous United States
COTS	Commercial Off The Shelf
CPC	Communication and Power Card
CPE	Customer Premises Equipment
C-RCE	Control-Radio Control Equipment
CS	Communication Server
CSIU	Communication Server Interface Unit

Acronym	Definition
CSS	Communication Server Station
CSTI	Communication Systems Technology, Inc.
CSU	Channel Service Unit
CTS	Coded Time Source
CTSU	Contractor Traffic Simulator Unit
DAT	Digital Audio Tape
DATAMUX	Deterministic Time Division Multiplexer (DTDM)
DAV	Data Above Voice
DB	Digital Bridge
dB	decibel
dBc	dB below carrier
dBi	dB referenced to an isotropic radiator
dBm	dB referenced to 1 milliwatt
DC	Direct Current
D/C	Downconverter
DCAA	Dual Call Auto Answer
DCD	Data Carrier Detect
DCE	Data Circuit-Terminating Equipment
DCE	Dual Channel Enclosure
DDS	Direct Dial Service
DDS-I	Dataphone Digital Service
DEO	Data Entry Operator
DF	Directional Finder
DIP	Drop and Insert Point
DJM	Dual Jack Module
DMC	Discrete Monitor and Control
DME	Distance Measuring Equipment
DMN	Data Multiplexing Network
DRU	Digital Recording Unit
DS1	Digital Signal Type 1
DSB	Double Sideband
DSP	Digital Signal Processor
DSR	Display System Replacement

Acronym	Definition
DSU	Data Service Unit
DTDM	Deterministic Time Division Multiplexer
DTL	Direct-To-Line
DVC	Data Voice Card
DVRS	Digital Voice Recording System
EA	Environmental Assessment
EARTS	En Route Automated Radar Tracking System
ECP	Engineering Change Proposal
EES	Earth Electrode System
EIS	Environmental Impact Statement
EMC	Electromagnetic Compatibility
EMI	Electromagnetic Interference
EMT	Electrical Metallic Tubing
ENDEC	Encoder/Decoder
ERMS	Environmental Remote Monitoring System
FAA	Federal Aviation Administration
FAATC	FAA William J. Hughes Technical Center
FCC	Federal Communications Commission
FCR	Federal Code of Regulations
FDIO	Flight Data Input/Output
FDIOC	Flight Data Input/Output Center
FDM	Frequency Division Multiplexed
F&E	Facilities and Equipment
FIPS	Federal Information Processing Standard
FONSI	Finding Of No Significant Impact
FS	Frequency Shift
FSDPS	Flight Services Data Processing Systems
FSK	Frequency Shift Keying
FSS	Flight Service Station
FTS	Federal Telecommunications System
G/G	Ground to Ground
GHz	Gigahertz
GPS	Global Positioning System
HCVR	High Capacity Voice Recorder

Acronym	Definition
HF	High Frequency
HS	Headset/Handset
HSTDM	High Speed Time Division Multiplexer
HVAC	Heating, Ventilating, and Air Conditioning
IC	Intercom
ICAO	International Civil Aviation Organization
ICD	Interface Control Document
ICSS	Integrated Communications Switching System
ID	Inside Diameter
IDAT	Inter-facility Data
IDF	Intermediate Distribution Frame
IEEE	Institute of Electrical and Electronic Engineers
IF	Intermediate Frequency
I/F	Interface
IFR	Instrument Flight Rules
IM	Intermodulation
IMC	Intermediate Metal Conduit
IMCS	Interim Monitor and Control Software
IP	Interphone
IR	Interface Revision
IRD	Interface Requirements Document
IRIG-B	Inter-Range Instrumentation Group-time code format B
ITU-TSS	International Telecommunications Union-Telecommunications Standards Section (was CCITT)
ITWS	Integrated Terminal Weather System
JAI	Joint Acceptance Inspection
JIC	Jack Interface Card
JP	Jack Panel
kbps	kilobits per second
kVA	kilovolt-ampere
LAN	Local Area Network
LDRCL	Low Density Radio Communications Link
LFDS	Large Facility Demarc System
LIM	Line Interface Module

Acronym	Definition
LINCS	Leased Interfacility NAS Communications System
LOS	Line of Sight
LPA	Linear Power Amplifier
LRR	Long Range Radar
LRU	Lowest Replaceable Unit
LS	Loudspeaker
Mbps	Megabits per second
MCC	Maintenance Control Center
MCI	Master Configuration Index
MCIM	Maintenance Control and Indicator Module
MCM	Thousand Circular Mils
MCS	Monitor and Control Software
MDS	Master Demarc System
MDT	Maintenance Data Terminal
mho	unit of conductance [= 1/(resistance in ohms)]
MMS	Maintenance Management System
MOPS	Minimum Operational Performance Standards
MPE	Maintenance Position Equipment
MPES	VSCS Maintenance Position Equipment Subsystem
MPS	Maintenance Processor Subsystem
M/S	Main/Standby
MSD	Modem Sharing Device
MSI	Main-Standby Interface
MSN	Message Switched Network
MSRP	Main Standby Relay Panel
µV	microvolt
µW	microwatt
mV	millivolt
mW	milliwatt
MUX	multiplexer
NADIN	National Airspace Data Interchange Network
NAPRS	NAS Automated Performance Reporting System
NARACS	National Radio Communications System
NAS	National Airspace System

Acronym	Definition
NAVAID	Navigational Aid
NCC	Network Control Center
NCP	NAS Change Proposal
NEC	National Electrical Code
NEPA	National Environmental Policy Act
NFPA	National Fire Protection Association
NMCE	Network Management and Control Equipment
NOTAM	Notice to Airmen
NWS	National Weather Service
OCC	Operational Control Center
OSHA	Occupational Safety and Health Administration
OSI	Open Systems Interconnection
PABX	Private Automatic Branch Exchange
PAD	Packet Assembler/Disassembler
PAMRI	Peripheral Adapter Module Remote Interface
PCM	Pulse Code Modulation
PCS	Power Conditioning System
PM	Power Module
PSD	Port Sharing Device
PSM	Power Supply and Alarm Monitor
PSN	Packet Switched Network
PSTN	Public Switched Telephone Network
PTT	push-to-talk
PVC	Polyvinyl Chloride
RAPCON	Radar Approach Control (Air Force Facility)
RAPM	Regional Associate Program Manager
RATCC	Radar Air Traffic Control Center (Naval Facility)
RCAG	Remote Center Air To Ground
RCE	Radio Control Equipment
RCF	Remote Communications Facility
RCL	Radio Communications Link
RCO	Remote Communications Outlet
RDAT	Long Range Radar Data

Acronym	Definition
R-DCE	Remote-Dual Channel Enclosure
RDV	Remote Data Voice Card
RDVS	Rapid Deployment Voice Switch
RF	Radio Frequency
RFI	Radio Frequency Interference
RI	Radio Interface
RIM	Relay Interface Module
RIPM	Radio Interface Patch Module
RL	Return Loss
RLOS	Radio Line of Sight
RML	Radar Microwave Link
RMM	Remote Maintenance Monitoring
RMMS	Remote Maintenance Monitoring System
RMS	Remote Monitoring Subsystem
RMVC	Remote Maintenance VORTAC Concentrator
ROD	Record Of Decision
R-RCE	Remote-Radio Control Equipment
RTR	Remote Transmitter-Receiver
RTS	Request To Send
SARPs	ICAO Standards and Recommended Practices
SAS	Site Activation Survey
S-BUEC	Sustaining-BUEC
SCC	System Command Center
SIC	Signal Interface Cable
Sinad	(Signal + Noise + Distortion)/(Noise + Distortion) at receiver output
SIS	System Interconnect Subsystem
SMO	System Management Office
S/N	Signal to Noise ratio
SRG	Signal Reference Grid
SSB	Single Sideband
SSC	System Support Center
STATMUX	Statistical Multiplexer
STDM	Statistical Time Division Multiplexing

Acronym	Definition
STVS	Small Terminal Voice Switch
TACAN	Tactical Air Navigation
TB	Terminal Block
TCP	Transmitter Control Panel
TCS	Tower Communications System
TDM	Time Division Multiplexed
TDMA	Time Division Multiple Access
TED	Touch Entry Device
Telco	Telephone Company
TLP	Transmission Level Point
TMS	Traffic Management Systems
TOR	Technical Officer Representative
TRACON	Terminal Radar Approach Control
UHF	Ultra High Frequency
UL	Underwriters Laboratory
UPS	Uninterruptible Power Supply
US	United States
VAC	Volts Alternating Current
VCA	Voltage Controlled Attenuator
VCE	VSCS Console Equipment
VCET	VSCS Console Equipment Trainer
VDC	Volts Direct Current
VDF	VSCS Distribution Frame
VDM	VSCS Display Module
VEARS	VSCS Emergency Access Radio System
VEM	VSCS Electronic Module
VF	Voice Frequency
VFCS	Voice Frequency Control System
VHF	Very High Frequency
VIK	VSCS Indirect Access Keyboard
VOR	VHF Omnidirectional Range
VORTAC	VHF Omni-Range Tactical Air Navigation
VOX	Voice Operated Switch

Acronym	Definition
VSCS	Voice Switching Control System
VSWR	Voltage Standing Wave Ratio
VTABS	VSCS Training And Backup Switch
VU	Volume Unit
WARP	Weather And Radar Processor
WC	Work Center
WJHTC	William J. Hughes Technical Center

APPENDIX 2. REFERENCED DOCUMENTS

The following documents are referenced by this handbook. The most current version of each document shall take precedence.

FAA Number	Name
Order	
1050.1D	Policies and Procedures for Considering Environmental Impacts
1050.15A	Fuel Storage Tanks at FAA Facilities
1050.17	Airway Facilities Environmental and Safety Compliance Program
1050.19	Environmental Due Diligence Audits in the Conduct of FAA Real Property Transactions
1050.20	Airway Facilities Asbestos Control
1800.8	NAS Configuration Management
1800.57	NAS Configuration Control Board
2500.35	Call for Estimates - Facilities and Equipment
3900.6A	Occupational Safety Program for Airway Facilities Personnel
3900.19A	Occupational Safety and Health
3900.49	Lockout/Tagout Procedures
3910.2A	Occupational Health Programs
3910.3A	Radiation Health Hazard and Protection
3910.4	Hearing Conservation
3910.5	Asbestos Control
4660.1	Real Property Handbook
6000.15B	General Maintenance Handbook for Airway Facilities
6000.22	Maintenance of Analog Lines
6030.45	Facility Reference Data File
6032.1A	Modifications to Ground Facilities, Systems, and Equipment
6170.11	The Data Multiplexing Network Phase III Deterministic Time Division Multiplexing Equipment Project Implementation Plan

FAA Number	Name
Order (Cont.)	
6170.12	The Data Multiplexing Network Phase III Statistical Time Division Multiplexer Equipment Project Implementation Plan
6470.29A & Changes 1-10	Maintenance of En Route Air-to-Ground Communication Facilities
6470.33	Control of Space at ARTCCs
6500.9A	Maintenance of Backup Emergency Communication (BUEC) Facilities
6540.5A	Maintenance of Radio Communications Link (RCL) Systems
6540.8	Low Density Radio Communications Link Project Implementation Plan
6580.3A	Remote Communications Facilities Installation Standards Handbook
6580.5	Maintenance of Remote Communications Facility Equipment
6600.2	Backup Emergency Communications Installation Instructions
6600.26A	National Airspace Data Interchange Network (NADIN) II Program Implementation Plan
6650.2B	Maintenance of Audio & Speech Equipment
6650.9	Requirements for Area Control Facility (ACF) Under Floor Cabling
6670.4D	Maintenance of Multichannel Recorder Equipment
6690.3	Maintenance of Voice Switching and Control System (VSCS)
6950.15B	ARTCC Critical Load Circuits and Configuration
6950.19	Practices and Procedures for Lightning Protection, Grounding, Bonding, and Shielding Implementation
6950.20	Fundamental Considerations of Lightning Protection, Grounding, Bonding, and Shielding
6950.25	Use of Electrical Power conditioning Devices at FAA Facilities
6980.24	Battery Theory and Selection Guidelines
6980.26	Battery Backup Power Systems - Theory and Selection Guidelines.
7210.3K	Facility Operation and Administration
7400.2D	Procedures for Handling Airspace Matters

FAA Number	Name
Specification	
FAA-C 1217e	Electrical Work, Interior
FAA-E-2770d	National Airspace Data Interchange Network (NADIN) Packet Switched Network (PSN)
FAA-G-2100	Electronic Equipment, General Requirements
Standard	
FAA-STD-002D	Facilities Engineering Drawing Preparation
FAA-STD-019B	Lightning and Surge Protection, Grounding, Bonding and Shielding Requirements for Facilities and Electronic Equipment
FAA-STD-020B	Transient Protection, Grounding, Bonding and Shielding Requirements for Equipment
FAA-STD-021A & Change 1	Configuration Management, (Contractor Requirements)
FAA-STD-025D	Preparation of Interface Documentation
FAA-STD-032	Design Standards for National Airspace System (NAS) Physical Facilities
MIL-STD-454N & Changes 1-4	Standard General Requirements for Electronic Equipment (Canceled) Use MIL-HDBK-454.
MIL-STD-461D & Change 1	Requirements for the Control of Electromagnetic Interference Emissions and Susceptibility
MIL-STD-462D & Changes 1-3	Measurement of Electromagnetic Interference Characteristics
MIL-STD-463	Definitions and System Units, Electromagnetic Interference and Electromagnetic Compatibility (EMC) Technology
Other Documents	
NAS-MD-001, Revision 7	NAS Configuration Management Document, Subsystem Baseline Configuration, and Documentation Listing
NFPA 70	National Fire Prevention Association, Title 70, National Electrical Code
NTIA Manual	National Telecommunications and Information Administration, Regulations and Procedures for Radio Frequency Management

APPENDIX 3. EQUIPMENT SPECIFICATIONS

1. **PURPOSE.** This appendix contains lists of typical data and specifications for FAA owned communications equipment located in ARTCCs to support en route A/G ATC.

2. **EQUIPMENT CATEGORIES.** Table 1 identifies ARTCC communications equipment by category and lists equipment items in each category for which data is included in this appendix. Each equipment item listing references a specific table that contains typical data for that item.

3. **EQUIPMENT CHARACTERISTICS.** Tables 2 through 39 present model numbers, physical and electrical characteristics, and performance specifications for communications equipment items listed in Table 1. Data in these tables can be used to evaluate performance and/or installation of this equipment. These tables are intended for use by planning, design, installation, and maintenance personnel. For data not included in these tables, please refer to specific manufacturer equipment manuals or FAA maintenance manuals.

4.-5. RESERVED.

TABLE 1. ARTCC COMMUNICATIONS EQUIPMENT CATEGORIES
Sheet 1 of 3

CATEGORY	EQUIPMENT	DATA TABLE
AIR TRAFFIC CONTROL ANALOG A/G RADIOS		
VHF Transmitter, FA-10450	CM-200/VT (or equal)	Table 2
UHF Transmitter, FA-10451	CM-200/UT (or equal)	Table 3
VHF Receiver, FA-10452	CM-200/VR (or equal)	Table 4
UHF Receiver, FA-10453	CM-200/UR (or equal)	Table 5
VHF Transmitter	AN/GRT-21 (or equal)	Table 6
UHF Transmitter	AN/GRT-22 (or equal)	Table 7
VHF Receiver	AN/GRR-23 (or equal)	Table 8
UHF Receiver	AN/GRR-24 (or equal)	Table 9
LINEAR POWER AMPLIFIERS (LPA)		
VHF LPA	CM-50 (or equal)	Table 10
UHF LPA	CM-51 (or equal)	Table 11
TRANSMITTER COMBINERS		
VHF Transmitter Combiner	CT-27221 (or equal)	Table 12
UHF Transmitter Combiner	CT-37222 (or equal)	Table 13
Power Loss and VSWR	Combiner Cavity	Table 14
RECEIVER MULTICOUPLERS		
VHF Rcvr Multicoupler	MDP-1-1113 (or equal)	Table 15
UHF Rcvr Multicoupler	MDP-1-2240 (or equal)	Table 16
Receiver Multicoupler	Signal Sensitivity	Table 17

TABLE 1. ARTCC COMMUNICATIONS EQUIPMENT CATEGORIES
Sheet 2 of 3

CATEGORY	EQUIPMENT	DATA TABLE
AIR TRAFFIC CONTROL VHF/UHF ANTENNA ELECTRICAL CHARACTERISTICS		
VHF, Dipole	DPV-35 (or equal)	Table 18
UHF, Dipole	DPV-37 (or equal)	Table 18
VHF, Dipole, 4 dBi Gain	DPV-40 (or equal)	Table 19
VHF, Dipole, 4 dBi Gain	DPV-40B (or equal)	Table 19
VHF, Directional, Yagi	YG-118 (or equal)	Table 19
VHF/VHF, Dual Dipole	DPV-36 (or equal)	Table 20
UHF/UHF, Dual Dipole	DPV-38 (or equal)	Table 20
UHF/VHF, Dual Dipole	DPV-39 (or equal)	Table 20
VHF/UHF ANTENNA PHYSICAL CHARACTERISTICS		
VHF, Dipole	DPV-35	Table 21
VHF/VHF, Dual Dipole	DPV-36	Table 21
UHF, Dipole	DPV-37	Table 21
UHF/UHF, Dual Dipole	DPV-38	Table 22
UHF/VHF, Dual Dipole	DPV-39	Table 22
VHF, Directional, Yagi	YG-118	Table 22
VHF, Dipole, 4 dBi Gain	DPV-40	Table 23
VHF, Dipole, 4 dBi Gain	DPV-40B	Table 23

TABLE 1. ARTCC COMMUNICATIONS EQUIPMENT CATEGORIES
Sheet 3 of 3

CATEGORY	EQUIPMENT	DATA TABLE
DATA MULTIPLEXING NETWORK (DMN)		
DATAMUX - Deterministic Time Division Multiplexer (DTDM)		
DMN Interfacility Modems	3600 Standard	Table 24
	3600 Premium	Table 24
	3600 Dig CSU/DSU	Table 24
DMN High Speed CSU/DSUs	3500 V.35 Single Ch	Table 25
	3512 Single Channel	Table 25
DMN Node HSTDM	6250 Digital Txn Mux	Table 26
DMN Digital Bridge	2185 MSD/PSD	Table 27
DMN A/B Switches	Nested, Standalone	Table 28
DMN Accessories	Interface (I/F)	Table 29
DMN 9820 ANMS	Workstations	Table 30
STATMUX - Statistical Time Division Multiplexer (STDM)		
DMN Type III STDM	DCX 840	Table 31
NATIONAL AIRSPACE DATA INTERCHANGE NETWORK (NADIN)		
NADIN II (PSN)	Packet Switch Node	Table 32
RADIO COMMUNICATIONS LINK (RCL)		
8 GHz Backbone Terminal	High Density	Table 33
LOW DENSITY RADIO COMMUNICATIONS LINK (LDRCL)		
900 MHz UHF Analog Link	Not at ARTCCs-1997	Table 34
1.8 GHz µW Dig Link (old)	< 35 Mile Links	Tables 35-37
8 GHz Microwave Dig Link	< 40 Mile Links	Table 38
23 GHz Microwave Dig Link	< 10 Mile Links	Table 39

TABLE 2. CM-200/VT VHF TRANSMITTER, TYPICAL CHARACTERISTICS
Sheet 1 of 2

FA-10450 PARAMETER	DATA	EXPLANATION
VHF Transmitter	Model **CM-200/VT** NSN 5820-01-369-13521	Oscillator Synthesizer, Single Frequency Cavity Filter
Prime Power	120 Volts AC (± 10%) 57-63 Hertz 115 Watts	Single Phase AC Frequency Power
Alternate Power	24 Volts DC (+20%,-10%)	Alternate Prime
Dimensions (Inches)	5.25 H x 17 W x 16.5 D	Standard 19 Inch Rack Mount
Weight	29.4 Pounds	Uncrated
Crystal Osc Freq	16.8 MHz (± 0.0005%) Crystal Aging ≤ 5 PPM	Frequency Standard Long Term
Tx Frequency Range	117.975 to 136.975 MHz	Pretuned Cavity Filter Limits to One Set Frequency
Available Channels	One Channel	Set to Pretuned Cavity Filter Frequency
Tuning Increments	25 kHz	Requires Cavity Filter Retuning or Replacement
Output Power	10 Watts CW (Carrier) 5-12 Watts Range 36 Watts PEP	(Nominal) Adjustable Level @ 90% Modulation

TABLE 2. CM-200/VT VHF TRANSMITTER, TYPICAL CHARACTERISTICS
Sheet 2 of 2

FA-10450 PARAMETER	DATA	EXPLANATION
Output Impedance	50 Ohms (Nominal)	Out to Antenna
VSWR Effects	> 2:1	Reduced Exciter Output Power
	∞ VSWR	No Eqpt Damage
Harmonic Output	-70 dBc	Down from Carrier
Spurious Output	-80 dBc	Down from Carrier
Carrier AM Noise	≥ 40 dB	Below 1 kHz 90% AM Ref
Noise Power	≥ 164 dBc/Hz	Freq ≥ ± 4 MHz from Carrier
Emissicns Class	A3E	Audio AM
Audio Input	600 Ohms Balanced	Input Impedance to Center Tap Transformer
	-25 to +10 dBm	Audio Level for 1 kHz 90% AM Ref
Audio Freq Response	± 2 dB	Nominal Level Variation 300-3000 Hz
Audio Distortion	< 15 Percent	1 kHz 90% AM Ref
Duty Cycle	Continuous at -10°C to +50°C	Required
Compatibility	Exciter (Use with Motorola CM-50 LPA or equal)	Not Compatible with AN/GRT LPA Equipment

TABLE 3. CM-200/UT UHF TRANSMITTER, TYPICAL CHARACTERISTICS
Sheet 1 of 2

FA-10451 PARAMETER	DATA	EXPLANATION
UHF Transmitter	Model **CM-200/UT** NSN 5820-01-369-13531	Oscillator Synthesizer, Single Frequency Cavity Filter
Prime Power	120 Volts AC (± 10%) 57-63 Hertz 115 Watts	Single Phase AC Frequency Power
Alternate Power	24 Volts DC (+20%,-10%)	Alternate Prime
Dimensions (Inches)	5.25 H x 17 W x 16.5 D	Standard 19 Inch Rack Mount
Weight	30 Pounds	Uncrated
Crystal Osc Freq	16.8 MHz (± 0.0005%) Crystal Aging ≤ 5 PPM	Frequency Standard Long Term
Tx Frequency Range	225 to 399.975 MHz	Pretuned Cavity Filter Limits to One Set Frequency
Available Channels	One Channel	Set to Pretuned Cavity Filter Frequency
Tuning Increments	25 kHz	Requires Cavity Filter Retuning or Replacement
Output Power	10 Watts CW (Carrier) 5-12 Watts Range 36 Watts PEP	(Nominal) Adjustable Level @ 90% Modulation

TABLE 3. CM-200/UT UHF TRANSMITTER, TYPICAL CHARACTERISTICS
Sheet 2 of 2

FA-10451 PARAMETER	DATA	EXPLANATION
Output Impedance	50 Ohms (Nominal)	Out to Antenna
VSWR Effects	> 2:1	Reduced Exciter Output Power
	∞ VSWR	No Eqpt Damage
Harmonic Output	-70 dBc	Down from Carrier
Spurious Output	-80 dBc	Down from Carrier
Carrier AM Noise	≥ 40 dB	Below 1 kHz 90% AM Ref
Noise Power	≥ 164 dBc/Hz	Freq ≥ ± 4 MHz from Carrier
Emissions Class	A3E	Audio AM
Audio Input	600 Ohms Balanced	Input Impedance to Center Tap Transformer
	-25 to +10 dBm	Audio Level for 1 kHz 90% AM Ref
Audio Freq Response	± 2 dB	Nominal Level Variation 300-3000 Hz
Audio Distortion	< 15 Percent	1 kHz 90% AM Ref
Duty Cycle	Continuous at -10°C to +50°C	Required
Compatibility	Exciter (Use with Motorola CM-51 LPA or equal)	Not Compatible with AN/GRT LPA Equipment

TABLE 4. CM-200/VR VHF RECEIVER, TYPICAL CHARACTERISTICS
Sheet 1 of 2

FA-10452 PARAMETER	DATA	EXPLANATION
VHF Receiver	Model **CM-200/VR** NSN 5820-01-369-13551	Single Frequency, Oscillator Synthesizer
Prime Power	120 Volts AC (± 10%) 57-63 Hertz 8 Watts	Single Phase AC Frequency Power
Alternate Power	24 Volts DC (+20%,-10%)	Alternate Prime
Dimensions (Inches)	3.5 H x 17 W x 11.5 D	Standard 19 Inch Rack Mount
Weight	15 Pounds	Uncrated
Operating Temp	-10°C to +50°C	Required
Crystal Osc Freq	16.8 MHz (± 0.0005%) Crystal Aging ≤ 5 PPM	Frequency Standard Long Term
Rx Frequency Range	117.975 to 136.975 MHz	Step Tunable
Available Channels	One Channel	Set to Channel Frequency
Tuning Increments	25 kHz	Channel Steps
Type of Receiver	Dual Conversion 45 MHz 455 kHz	Two IF Steps 1st IF Freq. 2nd IF Freq.
Sensitivity	≤ 3.0 microvolts (μV) for 10 dB (S+N)/N	30% AM
IF Bandwidth	< 6 dB at ± 9 kHz	Bandwidth Rolloff
IF Selectivity	> 60 dB ACR at ± 25 kHz	Adjacent Channel Rejection (ACR)

TABLE 4. CM-200/VR VHF RECEIVER, TYPICAL CHARACTERISTICS
Sheet 2 of 2

FA-10452 PARAMETER	DATA	EXPLANATION
IF Image Rejection	≥ 80 dB	Includes Spurious
Intermodulation (IM) Suppression	≥ 75 dB, 3rd Order IM	In-band Products of 2 Interfering Signals Both ≥ 100 kHz from Receive Frequency
Automatic Volume Control (AVC)	3 µV to 0.5 Volt	Attenuated Input Signal Level Range
Automatic Gain Control (AGC)	≤ 3 dB	Variance in Output Signal Level
Squelch Circuit	3-30 µV	Break (Off) Level Set Point Range
	< 3 µV	(On) Weak RF < -97.5 dBm
	> 30 µV	(On) Strong RF > 77.5 dBm
Emissions Class	A3E	Audio AM
Audio Line Output & Headset Output	100 milliwatts (mW) into 600 Ohms	Each Audio Output
Audio Freq Response	± 2 dB	Nominal Level Variation 300-3000 Hz
Audio Distortion	< 10% Distortion	At 50 Percent AM

TABLE 5. CM-200/UR UHF RECEIVER, TYPICAL CHARACTERISTICS
Sheet 1 of 2

FA-10453 PARAMETER	DATA	EXPLANATION
UHF Receiver	Model **CM-200/UR** NSN 5820-01-369-13541	Single Frequency, Oscillator Synthesizer
Prime Power	120 Volts AC (± 10%) 57-63 Hertz 8 Watts	Single Phase AC Frequency Power
Alternate Power	24 Volts DC (+20%,-10%)	Alternate Prime
Dimensions (Inches)	3.5 H x 17 W x 11.5 D	Standard 19 Inch Rack Mount
Weight	15 Pounds	Uncrated
Operating Temp	-10°C to +50°C	Required
Crystal Osc Freq	16.8 MHz (± 0.0005%) Crystal Aging ≤ 5 PPM	Frequency Standard Long Term
Rx Frequency Range	225 to 399.975 MHz	Step Tunable
Available Channels	One Channel	Set to Channel Frequency
Tuning Increments	25 kHz	Channel Steps
Type of Receiver	Dual Conversion 45 MHz 455 kHz	Two IF Steps 1st IF Freq. 2nd IF Freq.
Sensitivity	≤ 3.0 microvolts (μV) for 10 dB (S+N)/N	30% AM
IF Bandwidth	< 6 dB at ± 9 kHz	Bandwidth Rolloff
IF Selectivity	> 60 dB ACR at ± 25 kHz	Adjacent Channel Rejection (ACR)

TABLE 5. CM-200/UR UHF RECEIVER, TYPICAL CHARACTERISTICS
Sheet 2 of 2

FA-10453 PARAMETER	DATA	EXPLANATION
IF Image Rejection	≥ 80 dB	Includes Spurious
Intermodulation (IM) Suppression	≥ 70 dB, 3rd Order IM	In-band Products of 2 Interfering Signals Both ≥ 100 kHz from Receive Frequency
Automatic Volume Control (AVC)	3 µV to 0.5 Volt	Attenuated Input Signal Level Range
Automatic Gain Control (AGC)	≤ 3 dB	Variance in Output Signal Level
Squelch Circuit	3-30 µV	Break (Off) Level Set Point Range
	< 3 µV	(On) Weak RF < -97.5 dBm
	> 30 µV	(On) Strong RF > 77.5 dBm
Emissions Class	A3E	Audio AM
Audio Line Output & Headset Output	100 milliwatts (mW) Into 600 Ohms	Each Audio Output
Audio Freq Response	± 2 dB	Nominal Level Variation 300-3000 Hz
Audio Distortion	< 10% Distortion	At 50 Percent AM

TABLE 6. AN/GRT-21 VHF TRANSMITTER, TYPICAL CHARACTERISTICS
Sheet 1 of 2

AN/GRT-21 PARAMETER	DATA	EXPLANATION
VHF Transmitter	Model **AN/GRT-21**	Vacuum Tube Type, Single Frequency, Oscillator Synthesizer
Prime Power	120 Volts AC (± 10%) (105, 210, or 240 VAC)	Single Phase (Options)
	60 Hertz (47-420 Hz)	AC Freq (Options)
	140 Watts	Exciter
	610 Watts	Power Amplifier
Alternate Power	22-30 Volts DC	Alternate Prime
Dimensions (Inches)	5-1/4 H 17-3/4 W 16-7/8 D	Exciter
	7 H 17-3/4 W 18-1/2 D	Power Amplifier
Weight, Uncrated	43 Pounds	Exciter
	70 Pounds	Power Amplifier
Tx Frequency Range	116 to 149.975 MHz	Step Tunable
Available Channels	One Channel	Set at Channel Frequency
Tuning Increments	25 kHz	Channel Steps
Output Impedance	50 Ohms	Exciter
	50 Ohms	Power Amplifier
Transmit Power Out	10 Watts	Exciter @ 90% AM
	50 Watts	Power Amplifier @ 90% AM

TABLE 6. AN/GRT-21 VHF TRANSMITTER, TYPICAL CHARACTERISTICS
Sheet 2 of 2

AN/GRT-21 PARAMETER	DATA	EXPLANATION
Oscillator Crystal	CR-75/U or CR-18/U	Type
Crystal Holder	HC-27/U	Type
Crystal Osc Freq	74.9875 (± 0.0005%) MHz Crystal Aging ≤ 5 PPM	1:2 Output Ratio Long Term
Harmonic and Spurious Output	80 dBc	-15 to +10 dBm Input Level Range
Max VSWR	3:1 3:1 High VSWR	Exciter Power Amplifier Exciter Switches to Antenna Port
Carrier AM Noise	≥ 50 dB	Below 1 kHz 90% AM Ref
Emissions Class	A3E	Audio AM
Audio Input	600 Ohms Balanced	Input Impedance
Audio Freq Response	+1, -2 dB	Level Variation 300-3000 Hz 1 kHz 90% AM Ref
Audio Distortion	< 15 Percent	1 kHz 90% AM Ref
Capabilities	Exciter or Power Amp	Can Be Used Separately with Compatible Eqpt

TABLE 7. AN/GRT-22 UHF TRANSMITTER, TYPICAL CHARACTERISTICS
Sheet 1 of 2

AN/GRT-22 PARAMETER	DATA	EXPLANATION
UHF Transmitter	Model **AN/GRT-22**	Vacuum Tube Type, Single Frequency Oscillator Synthesizer
Prime Power	120 Volts AC (± 10%) (105, 210, or 240 VAC)	Single Phase (Options)
	60 Hertz (47-420 Hz)	AC Freq (Options)
	140 Watts	Exciter
	610 Watts	Power Amplifier
Alternate Power	22-30 Volts DC	Alternate Prime
Dimensions (Inches)	5-1/2 H	Exciter
	7 H	Power Amplifier
	17-3/4 W	Exciter
	17-3/4 W	Power Amplifier
	16-7/8 D	Exciter
	18-1/2 D	Power Amplifier
Weight, Uncrated	43 Pounds	Exciter
	70 Pounds	Power Amplifier
Frequency Range	225 to 399.975 MHz	Step Tunable
Available Channels	One Channel	Set at Channel Frequency
Tuning Increments	25 kHz	Channel Steps
Output Impedance	50 Ohms	Exciter
	50 Ohms	Power Amplifier
Transmit Power Out	10 Watts	Exciter @ 90% AM
	50 Watts	Power Amplifier @ 90% AM

TABLE 7. AN/GRT-22 UHF TRANSMITTER, TYPICAL CHARACTERISTICS
Sheet 2 of 2

AN/GRT-22 PARAMETER	DATA	EXPLANATION
Oscillator Crystal	CR-75/U or CR-18/U	Type
Crystal Holder	HC-27/U	Type
Crystal Osc Freq	99.99575 (± 0.0005%) MHz Crystal Aging ≤ 5 PPM	1:4 Output Ratio Long Term
Harmonic and Spurious Output	80 dBc	-15 to +10 dBm Input Level Range
Max VSWR	3:1 3:1 High VSWR	Exciter Power Amplifier Exciter Switches to Antenna Port
Carrier AM Noise	≥ 50 dB	Below 1 kHz 90% AM Ref
Emissions Class	A3E	Audio AM
Audio Input	600 Ohms Balanced	Input Impedance
Audio Freq Response	+1, -2 dB	Level Variation 300-3000 Hz 1 kHz 90% AM Ref
Audio Distortion	< 15 Percent	1 kHz 90% AM Ref
Capabilities	Exciter or Power Amp	Can Be Used Separately with Compatible Eqpt.

TABLE 8. AN/GRR-23 VHF RECEIVER, TYPICAL CHARACTERISTICS
Sheet 1 of 2

AN/GRR-23 PARAMETER	DATA	EXPLANATION
VHF Receiver	Model **AN/GRR-23**	Single Frequency Oscillator Synthesizer
Prime Power	120 Volts AC (± 10%) (105, 210, or 240 VAC) 60 Hertz (47-420 Hz) 50 Watts	Single Phase (Options) AC Freq (Options) Power
Alternate Power	22-30 Volts DC	Alternate Prime
Dimensions	3.5 H x 19 W x 12.25 D	Inches
Weight	22 Pounds	Uncrated
Rx Frequency Range	116.00 to 149.975 MHz	Step Tunable
Available Channels	One Channel	Set at Channel Frequency (F_c)
Tuning Increments	25 kHz	Channel Steps
IF Frequency	20.6 MHz	Single Conversion
Frequency Stability	0.001 Percent	Long Term
Oscillator Crystal	CR-75/1	Type
Crystal Holder	HC-6/U	Type
Crystal Osc Freq	85.2875 (± 0.0005%) Crystal Aging ≤ 5 PPM	MHz Long Term
Channel Frequency (F_c) Calculation	$F_c = \frac{F_r + 20.6}{2}$ MHz	F_r = Receiver Synthesizer Output Freq

TABLE 8. AN/GRR-23 VHF RECEIVER, TYPICAL CHARACTERISTICS
Sheet 2 of 2

AN/GRR-23 PARAMETER	DATA	EXPLANATION
Rx Sensitivity	≤ 3.0 microvolts (µV) for 10 dB (S+N)/N	1 kHz 30% AM Test Signal
Selectivity	± 10 kHz	BW @ 6 dB Down
	± 25 kHz ACR	BW @ 80 dB Down (Adjacent Channel Rejection (ACR))
Harmonic Distortion	10 Percent	At 30% Modulation
	20 Percent	At 90% Modulation
Automatic Volume Control (AVC) Range	6 µV to 1.0 Volt	Attenuated Input Signal Level Range
	30 dB	Muting Range
Automatic Gain Control (AGC)	≤ 3 dB	Variance in Output Signal Level
Squelch Circuit	3-50 µV	Break (Off) Level Set Point Range
	< 3 µV	(On) Weak RF < -97.5 dBm
	> 50 µV	(On) Strong RF > -73 dBm
Emissions Class	A3E	Audio AM
Audio Line Output & Headset Output	100 milliwatts (mW) into 600 Ohms	Each Audio Output
Audio Response	+1 to -2 dB	Level Variation (300-3000 Hz)

TABLE 9. AN/GRR-24 UHF RECEIVER, TYPICAL CHARACTERISTICS
Sheet 1 of 2

AN/GRR-24 PARAMETER	DATA	EXPLANATION
UHF Receiver	Model **AN/GRR-24**	Single Frequency Oscillator Synthesizer
Prime Power	120 Volts AC (± 10%) (105, 210, or 240 VAC) 60 Hertz (47-420 Hz) 50 Watts	Single Phase (Options) AC Freq (Options) Power
Alternate Power	22-30 Volts DC	Alternate Prime
Dimensions	3.5 H x 19 W x 12.25 D	Inches
Weight	22 Pounds	Uncrated
Rx Frequency Range	225.00 to 399.975 MHz	Step Tunable
Available Channels	One Channel	Set at Channel Frequency (F_c)
Tuning Increments	25 kHz	Channel Steps
IF Frequency	20.6 MHz	Single Conversion
Frequency Stability	0.001 Percent	Long Term
Oscillator Crystal	CR-75/1	Type
Crystal Holder	HC-6/U	Type
Crystal Osc Freq	94.8375 (± 0.0005%) Crystal Aging ≤ 5 PPM	MHz Long Term
Channel Frequency (F_c) Calculations	For F_c = 225 to 312 MHz $F_c = \frac{F_r + 20.6}{2}$ MHz	F_r = Receiver Synthesizer Output Freq

TABLE 9. AN/GRR-24 UHF RECEIVER, TYPICAL CHARACTERISTICS
Sheet 2 of 2

AN/GRR-24 PARAMETER	DATA	EXPLANATION
	For F_c = 312.05 to 399.95 MHz $F_c = \frac{F_r - 20.6}{2}$ MHz	
Rx Sensitivity	≤ 3.0 microvolts (µV) for 10 dB (S+N)/N	1 kHz 30% AM Test Signal
Selectivity	± 20 kHz	BW @ 6 dB Down
	± 50 kHz	BW @ 80 dB Down
Harmonic Distortion	10 Percent	At 30% Modulation
	20 Percent	At 90% Modulation
Automatic Volume Control (AVC) Range	6 µV to 1.0 Volt	Received Signal Levels after Attenuation
	30 dB	Muting Range
Automatic Gain Control (AGC)	≤ 3 dB	Variance in Output Signal Level
Squelch Circuit	3-50 µV	Break (Off) Level Set Point Range
	< 3 µV	(On) Weak RF < -97.5 dBm
	> 50 µV	(On) Strong RF > -73 dBm
Emissions Class	A3E	Audio AM
Receiver Outputs	100 milliwatts into 600 Ohms	Audio Line Output & Headset Output
Audio Response	+1 to -2 dB	Level Variation (300-3000 Hz)

TABLE 10. CM-50 VHF LINEAR POWER AMPLIFIER, TYPICAL CHARACTERISTICS
Sheet 1 of 2

CM-50 LPA PARAMETER	DATA	EXPLANATION
VHF LPA	Motorola Model **CM-50**	Activated by Tx RF Input Energy Detection
Power Supply	115/230 Volts AC (± 5%) 45-65 Hertz	Single Phase AC Frequency
Power	350 Watts	Consumed
Alternate Power	23-29 Volts DC	Alternate Supply
Dimensions (Inches)	5.25 H x 19 W x 18.5 D	Standard 19 Inch Rack Mount
Weight	< 55 Pounds	Uncrated
Tx Frequency Range	117.975 to 136.975	MHz
Tx Safety Bypass	10 Watt	Bypass to Antenna
Receive Bypass	≤ 2 dB	Insertion Loss
Operating Temp	-10°C to +50°C	Continuous Duty
Humidity	90% at +40°C	No Dew Accumulation
Output Power	50 Watts Carrier 180 Watts PEP	Nominal @ 90% AM
Input Impedance	50 Ohms	With Max 2:1 VSWR
Output Impedance	50 Ohms	With Max 2:1 VSWR
RF Input Power	8 to 12 Watts	From Transmitter

TABLE 10. CM-50 VHF LINEAR POWER AMPLIFIER, TYPICAL CHARACTERISTICS
Sheet 2 of 2

CM-50 LPA PARAMETER	DATA	EXPLANATION
Distortion	≤ 10 Percent	At 90% AM
Intermodulation (IM) Output	< 30 dBc	For -20 dBc Interference
Permissible Mismatch	∞ VSWR	No Eqpt Damage
Harmonics	-70 dBc	
Spurious	-70 dBc	
Compatibility	Use with CM-200/VT Transmitter	Not compatible with AN/GRT Eqpt

TABLE 11. CM-51 UHF LINEAR POWER AMPLIFIER, TYPICAL CHARACTERISTICS
Sheet 1 of 2

CM-51 LPA PARAMETER	DATA	EXPLANATION
UHF LPA	Motorola Model **CM-51**	Activated by Tx RF Input Energy Detection
Power Supply	115/230 Volts AC (± 5%) 45-65 Hertz	Single Phase AC Frequency
Power	500 Watts	Consumed
Alternate Power	23-29 Volts DC	Alternate Supply
Dimensions (Inches)	5.25 H x 19 W x 18.5 D	Standard 19 Inch Rack Mount
Weight	< 55 Pounds	Uncrated
Tx Frequency Range	225 to 399.975	MHz
Tx Safety Bypass	10 Watt	Bypass to Antenna
Receive Bypass	≤ 2 dB	Insertion Loss
Operating Temp	-10°C to +50°C	Continuous Duty
Humidity	90% at +40°C	No Dew Accumulation
Output Power	50 Watts Carrier 180 Watts PEP	Nominal @ 90% AM
Input Impedance	50 Ohms	With Max 2:1 VSWR
Output Impedance	50 Ohms	With Max 2:1 VSWR
RF Input Power	8 to 12 Watts	From Transmitter

TABLE 11. CM-51 UHF LINEAR POWER AMPLIFIER, TYPICAL CHARACTERISTICS
Sheet 2 of 2

CM-51 LPA PARAMETER	DATA	EXPLANATION
Distortion	≤ 10 Percent	At 90% AM
Intermodulation (IM) Output	< 30 dBc	For -20 dBc Interference
Permissible Mismatch	∞ VSWR	No Eqpt Damage
Harmonics	-70 dBc	
Spurious	-70 dBc	
Compatibility	Use with CM-200/UT Transmitter	Not compatible with AN/GRT Eqpt

TABLE 12. CT-27221 VHF TRANSMITTER COMBINER, TYPICAL CHARACTERISTICS

CT-27221 PARAMETER	DATA	EXPLANATION
VHF Transmitter Combiner	Sinclair Model **CT-27221**	Passive Device
Dimensions (Inches)	40.5 H (with Castors) x 21 W x 21 D	Mounted in Open Frame Rack
Weight	150 Pounds	Uncrated
Tx Frequency Range	118 to 137	MHz
Frequency Separation	300 kHz Minimum	At 3.0 dB Insertion Loss
Number of Channels	4	To be Combined
Passband Insertion Loss	3.0 dB	Maximum
Input & Output Impedance	50 Ohms	Each Port, an N Female Connector
Input VSWR	1.25:1 Max VSWR	Or Input Return Loss 19.1 dB Min
Output VSWR	1.5:1 Max VSWR	Or Output Return Loss 14.0 dB Min
Isolation:		
Tx to Tx	70.0 dB Minimum	All Operate Temp
Ant to Tx	60.0 dB Minimum 50.0 dB Minimum	+10°C - +40°C -10°C - +10°C and +40°C - +55°C
RF Input Power	50 Watts/Channel	Maximum
Harmonic and Spurious Suppression	70 dB Below Fundamental Freq Input Power Level	200 - 1,000 MHz

TABLE 13. CT-37222 UHF TRANSMITTER COMBINER, TYPICAL CHARACTERISTICS

CT-37222 PARAMETER	DATA	EXPLANATION
UHF Transmitter Combiner	Sinclair Model **CT-37222**	Passive Device
Dimensions (Inches)	40.5 H (with Castors) x 21 W x 21 D	Mounted in Open Frame Rack
Weight	150 Pounds	Uncrated
Tx Frequency Range	225 to 400	MHz
Frequency Separation	300 MHz Minimum	At 3.0 dB Insertion Loss
Number of Channels	4	To be Combined
Passband Insertion Loss	3.0 dB	Maximum
Input & Output Impedance	50 Ohms	Each Port, an N Female Connector
Input VSWR	1.5:1 Max VSWR	Or Input Return Loss 14.0 dB Min
Output VSWR	1.5:1 Max VSWR	Or Output Return Loss 14.0 dB Min
Isolation:		
Tx to Tx	70.0 dB Minimum	All Operate Temp
Ant to Tx	60.0 dB Minimum	+10°C - +40°C
	50.0 dB Minimum	-10°C - +10°C and +40°C - +55°C
RF Input Power	50 Watts/Channel	Maximum
Harmonic and Spurious Suppression	70 dB Below Fundamental Freq Input Power Level	425 - 1,000 MHz

TABLE 14. TYPICAL TRANSMITTER COMBINER CAVITY POWER LOSS AND VSWR

M/S TRANSMITTER FREQUENCY (MHz)		50 OHM LOAD AT CAVITY OUT		ANTENNA AT CAVITY OUT		VSWR (ON ANTENNA)	
		TX OUT (WATTS)	CAV OUT (WATTS)	TX OUT (WATTS)	CAV OUT (WATTS)	TX OUT RATIO	CAV OUT RATIO
122.2	#1	10	6.9	10	7.1	1.15	1.47
	#2	10	6.5	10	6.2	1.38	1.29
122.65	#1	10	6.9	10	6.0	1.63	1.43
	#2	10	6.8	10	6.4	1.70	1.37
124.25	#1	10	7.1	10	7.2	1.48	1.46
	#2	10	6.4	10	6.0	1.46	1.37
127.75	#1	10	5.9	10	6.4	1.38	1.49
	#2	10	6.8	10	7.6	1.55	1.55
133.275	#1	10	6.3	10	6.4	1.28	1.43
	#2	10	6.5	10	6.1	1.65	1.57
134.625	#1	10	6.6	10	6.5	1.34	1.51
	#2	10	7.0	10	7.1	1.79	1.62
255.4	#1	10	6.5	10	6.6	1.28	1.19
	#2	10	6.6	10	6.8	1.35	1.19
263.1	#1	10	6.8	10	6.8	1.15	1.18
	#2	10	7.3	10	7.3	1.15	1.13
296.7	#1	10	7.0	10	6.8	1.15	1.18
	#2	10	7.0	10	6.7	1.27	1.15
319.0	#1	10	6.2	10	6.2	1.15	1.20
	#2	10	6.6	10	6.7	1.23	1.35
346.4	#1	10	6.5	10	6.7	1.38	1.39
	#2	10	6.5	10	6.6	1.19	1.20
380.3	#1	10	6.2	10	6.2	1.45	1.20
	#2	10	6.8	10	7.0	1.43	1.35

TABLE 15. MDP-1-1113 VHF RECEIVER MULTICOUPLER, TYPICAL CHARACTERISTICS - Sheet 1 of 2

MDP-1-1113 PARAMETER	DATA	EXPLANATION
VHF Receiver Multicoupler	MU-DEL Model **MDP-1-1113**	Active Device, Directional Coupler Input
Rx Frequency Range	118 to 137	MHz
Frequency Response	≥ 35 dB Down ≥ 20 dB Down	Below 108 MHz Above 160 MHz
In-Band Linearity	± 1 dB (118-137 MHz)	At Input Levels of -125 dBm to +17 dBm
Number of Channels	4 Frequencies Maximum	To be Separated
RF Input (1)	50 Ohms Nominal	Input Impedance, N Female Conn (1)
RF Outputs (4)	50 Ohms Nominal Each	Output Impedance, BNC Female Connector (4)
VSWR	2.0:1 Maximum 1.5:1 Maximum	Input Each Output (4)
Input RF Power Capability	-125 dBm to +20 dBm	Dynamic Range
Isolation	25 dB Minimum	Between Outputs
RF Gain	0 dB ± 1 dB < 0.5 dB with Constant Input	Input to Output Level Variation Between Outputs

TABLE 15. MDP-1-1113 VHF RECEIVER MULTICOUPLER, TYPICAL CHARACTERISTICS - Sheet 2 of 2

MDP-1-1113 PARAMETER	DATA	EXPLANATION
Noise Figure	9.5 dB Maximum	In 1 MHz BW Across Operating Range
Intermodulation (IM) Suppression	70 dB Below Rx Signal	In-band Products of 2 Interfering Signals up to +17 dBm Each & Both ≥ 100 kHz from Receive Frequency
Power Required	120 Volts AC (± 10%)	Single Phase
	57-63 Hz	AC Frequency
	24 Volts DC (-10%, +20%)	Alternate Supply
	6 Amperes	Maximum Power
AC Power Connector	3-Prong	Standard US with Isolated Ground Prong
DC Power Connector	2-Prong	MS Connector
Dimensions (Inches)	3.5 H 19 x W x 17 D	Maximum
Operating Temp	-10°C to +55°C	Continuous Use

TABLE 16. MDP-1-2240 UHF RECEIVER MULTICOUPLER, TYPICAL CHARACTERISTICS - Sheet 1 of 2

MDP-1-2240 PARAMETER	DATA	EXPLANATION
UHF Receiver Multicoupler	MU-DEL Model **MDP-1-2240**	Active Device, Directional Coupler Input
Rx Frequency Range	225 to 400	MHz
Frequency Response	≥ 15 dB Down ≥ 20 dB Down	Below 215 MHz Above 422 MHz
In-Band Linearity	± 1 dB (225-400 MHz)	At Input Levels of -125 dBm to 0 dBm
Number of Channels	4 Frequencies Maximum	To be Separated
RF Input (1)	50 Ohms Nominal	Input Impedance, N Female Conn (1)
RF Outputs (4)	50 Ohms Nominal Each	Output Impedance, BNC Female Connector (4)
VSWR	2.0:1 Maximum 1.5:1 Maximum	Input Each Output (4)
Input RF Power Capability	-125 dBm to 0 dBm	Dynamic Range
Isolation	25 dB Minimum	Between Outputs
RF Gain	0 dB ± 1 dB < 0.5 dB with Constant Input	Input to Output Level Variation Between Outputs

TABLE 16. MDP-1-2240 UHF RECEIVER MULTICOUPLER, TYPICAL CHARACTERISTICS - Sheet 2 of 2

MDP-1-2240 PARAMETER	DATA	EXPLANATION
Noise Figure	9.5 dB Maximum	In 1 MHz BW Across Operating Range
Intermodulation (IM) Suppression	80 dB Below Rx Signal	In-band Products of 2 Interfering Signals up to 0 dBm Each & Both ≥ 1 MHz from Receive Frequency
Power Required	120 Volts AC (± 10%)	Single Phase
	57-63 Hz	AC Frequency
	24 Volts DC (-10%, +20%)	Alternate Supply
	6 Amperes	Maximum Power
AC Power Connector	3-Prong	Standard US with Isolated Ground Prong
DC Power Connector	2-Prong	MS Connector
Dimensions (Inches)	3.5 H 19 x W x 17 D	Maximum

TABLE 17. TYPICAL RECEIVER MULTICOUPLER - SIGNAL SENSITIVITIES

M/S RECEIVER FREQUENCY		WITH SIG AT RX INPUT SENSITIVITY (µV)	WITH SIG AT RX INPUT SQUELCH (µV)	WITH SIG AT MIC INPUT SENSITIVITY (µV)	WITH SIG AT MIC INPUT SQUELCH (µV)
122.2	#1 (Note 1)				
	#2				
122.65	#1	1.3	3.8	1.0	3.0
	#2	1.6	3.8	1.5	3.0
124.25	#1	1.5	4.0	1.2	3.0
	#2	1.0	4.0	1.0	3.0
127.75	#1	1.1	4.0	1.1	3.0
	#2	0.9	3.8	1.1	3.0
133.275	#1	1.0	4.4	0.9	3.0
	#2 (Note 2)	0.9	1.6	1.8	3.0
134.625	#1	2.0	3.6	1.5	3.0
	#2	1.0	3.6	1.5	3.0
255.4	#1 (Note 1)				
	#2				
263.1	#1	1.0	3.0	1.5	3.0
	#2	1.3	4.0	1.7	3.0
296.7	#1	1.4	3.4	1.2	3.0
	#2	4.8	2.9	3.2	3.0
319.0	#1	1.5	2.9	1.5	3.0
	#2	1.5	2.3	1.5	3.0
346.4	#1	2.3	2.6	2.0	3.0
	#2	1.5	2.3	2.6	3.0
380.3	#1	1.6	3.6	1.6	3.0
	#2	1.8	2.6	2.2	3.0

Notes: 1. Data was not taken for this frequency.

2. A bandpass cavity was connected between the receiver and multicoupler.

TABLE 18. ANTENNA PRODUCTS COMPANY (APC) ANTENNA - ELECTRICAL CHARACTERISTICS

ANTENNA CHARACTERISTIC	DPV-35	DPV-37
Antenna Type	VHF Dipole	UHF Dipole
Frequency Range (MHz)	118-136	225-400
Gain (Referenced to Isotropic Radiator)	0 dBi minimum	0 dBi minimum
Polarization	Vertical	Vertical
Elevation Beam		
Width	65° Minimum	65° Minimum
Beam Maximum Location	Horizon ±10°	Horizon ±10°
Azimuth Pattern	Omni ±1 dB Variance	Omni ±1 dB Variance
VSWR	2:1 Maximum	2:1 Maximum
Terminal		
Impedance	50 Ohms	50 Ohms
Coax Connector	N Female	N Female
DC Resistance to Ground	0 Ohms	0 Ohms
RF Power Rating	100 Watts Max	100 Watts Max

TABLE 19. ANTENNA PRODUCTS COMPANY (APC) ANTENNA - ELECTRICAL CHARACTERISTICS

ANTENNA CHARACTERISTIC	DPV-40	DPV-40B	YG-118
Antenna Type	VHF Dipole	VHF Dipole	VHF Yagi
Frequency Range (MHz)	118-136	118-156	118-136
Gain (Referenced to Isotropic Radiator)	4 dBi minimum	4 dBi minimum	10 dBi minimum (approx)
Polarization	Vertical	Vertical	Vertical
Elevation Beam			
Width	40° Minimum	30° Minimum	50° Typical
Maximum Located	Horizon ±10°	Horizon ±10°	Horizon +10°
Front to Back Ratio			20 dB minimum
Azimuth Pattern	Omni ±1 dB Variance	Omni ±1 dB Variance	Directional, 65° Beam Width Typical
VSWR	2:1 Maximum	2:1 Maximum	2:1 Maximum
Terminal			
Impedance	50 Ohms	50 Ohms	50 Ohms
Coax Connector	N Female	N Female	N Female
DC Resistance to Ground	0 Ohms	0 Ohms	< 1 Ohm
RF Power Rating	100 Watts Maximum	100 Watts Maximum	50 Watts

TABLE 20. ANTENNA PRODUCTS COMPANY (APC) ANTENNA - ELECTRICAL CHARACTERISTICS

ANTENNA CHARACTERISTIC	DPV36	DPV38	DPV39
Dual Dipole Antennas	VHF/VHF	UHF/UHF	UHF/VHF
Frequency Range (MHz)	118-136 118-136	225-400 225-400	225-400 118-136
Gain (Referenced to Isotropic Radiator)	0 dBi min	0 dBi min	0 dBi min
Input Isolation	30 dB Minimum	30 dB Minimum	30 dB Minimum
Polarization	Vertical	Vertical	Vertical
Elevation Beam			
Width	65° Minimum	65° Minimum	65° Minimum
Maximum Located	Horizon ±10°	Horizon ±10°	Horizon ±10°
Azimuth Pattern	Omni ±1 dB Variance	Omni ±1 dB Variance	Omni ±1 dB Variance
VSWR	2:1 Maximum	2:1 Maximum	2:1 Maximum
Terminals, 2 Each			
Impedance	50 Ohms	50 Ohms	50 Ohms
Coax connector	N Female	N Female	N Female
DC Resistance to Gnd	0 Ohms	0 Ohms	0 Ohms
RF Power Rating	100 Watts Maximum	100 Watts Maximum	100 Watts Maximum

TABLE 21. ANTENNA PRODUCTS CO. (APC) ANTENNA - PHYSICAL CHARACTERISTICS

ANTENNA CHARACTERISTIC	DPV-35	DPV-36	DPV-37
Antenna Type	VHF Dipole	VHF/VHF Dual Dipole	UHF Dipole
Length	51.5 inches	142.25 inches	40.5 inches
Ship Weight	4.5 lbs	14 lbs	3.5 lbs
Radome Diameter	2.35 inches	2.35 inches	2.35 inches
Mount, IPS Pipe Mast Diameter	1.25 inches or 2.5 inches	2.5 inches	1.25 inches or 2.5 inches
All Antenna Parts	At DC Gnd Potential	At DC Gnd Potential	At DC Gnd Potential
Operational Conditions	100 mph Wind with 1/2 inch Radial Ice	100 mph Wind with 1/2 inch Radial Ice	100 mph Wind with 1/2 inch Radial Ice
Environmental			
Operating Temp	-50°C to +70°C	-50°C to +70°C	-50°C to +70°C
Humidity	0 to 100%	0 to 100%	0 to 100%
Rain	Up to 7 inches/hr	Up to 7 inches/hr	Up to 7 inches/hr
Service Life	10 Years Continuous and Unattended	10 Years Continuous and Unattended	10 Years Continuous and Unattended

TABLE 22. ANTENNA PRODUCTS CO. (APC) ANTENNA - PHYSICAL CHARACTERISTICS

ANTENNA CHARACTERISTIC	DPV-38	DPV-39	YG-118
Antenna type	UHF/UHF Dual Dipole	UHF/VHF Dual Dipole	VHF Yagi
Length	92 inches	94 inches	147 inches
Ship Weight	9.5 lbs	9.5 lbs	35 lbs
Radome Diameter	2.35 inches	2.35 inches	
Mount, IPS Pipe Mast Diameter	2.5 inches	2.5 inches	2.5 inches
All Antenna Parts	At DC Gnd Potential	At Dc Gnd Potential	At DC Gnd Potential
Operational Conditions	100 mph Wind with 1/2 inch Radial Ice	100 mph Wind with 1/2 inch Radial Ice	85 knots (~100 mph) Wind with 1/2 inch Radial Ice
Environmental			
Operating Temp	-50°C to +70°C	-50°C to +70°C	-50°C to +70°C
Humidity	0 to 100%	0 to 100%	0 to 100%
Rain	Up to 7 inches/hr	Up to 7 inches/hr	Up to 7 inches/hr
Service Life	10 Years Continuous and Unattended	10 Years Continuous and Unattended	10 Years Continuous and Unattended

TABLE 23. ANTENNA PRODUCTS CO. (APC) ANTENNA - PHYSICAL CHARACTERISTICS

ANTENNA CHARACTERISTIC	DPV-40	DPV-40B
Antenna Type	VHF Dipole, 4 dBi Gain	VHF Dipole , 4 dBi Gain
Length	133.75 inches	127.5 inches
Ship Weight	11 lbs	23 lbs
Radome Diameter	2.35 inches	5 inches
Mount, IPS Pipe Mast Diameter	1.25 inches or 2.5 inches	1.25 inches or 2.5 inches
All Antenna Parts	At DC Gnd Potential	At DC Gnd Potential
Operational Conditions	100 mph Wind with 1/2 inch Radial Ice	100 mph Wind with 1/2 inch Radial Ice
Environmental		
Operating Temperature	-50°C to +70°C	-50°C to +70°C
Humidity	0 to 100%	0 to 100%
Rain	Up to 7 inches/hr	Up to 7 inches/hr
Service Life	10 Years Continuous and Unattended	10 Years Continuous and Unattended

TABLE 24. CODEX 3600 MODEMS, DMN DATAMUX -- Sheet 1 of 2

DMN PHASE IIIB CATEGORY	DATA	EXPLANATION
3600 Modems, Free Standing		Backup Auto Dial for Restoral
3600 Standard Modem	Prod Code **32701-0** NSN 5895-01-364-68611	8 Channel-TDM, 2.4/4.8/9.6 kbps, 2&4-Wire Restoral
Upgrade, Standard Modem to Premium Mode	NSN 5998-01-418-04901	Option
Consists of:	Prod Code **32721**	Flex Cartridge
	Prod Code **M10493**	Premium Oper Set w/ Signal Quality
3600 Premium Modem	Prod Code **32701-2** NSN 5895-01-364-68641	8 Channel-TDM, 14.4/19.2 kbps, 2&4 Wire Restoral
Upgrade, Premium Modem to Standard Mode	NSN 8200-00-140-47481	Option for 2.4 kbps Multipoint
Consists of:	Prod Code **32721**	Flex Cartridge
	Prod Code **32792**	V.32 Single Line Restoral
	Prod Code **M10454**	Standard Oper Set w/ 2.4 Multipoint
Upgrade, Premium Modem 8 Ch MUX, 4-Wire Restoral to V.32 Single Line 2-Wire Restoral	NSN 8200-00-140-46941	Option where Prod Code **32738** Oper Set Installed
Consists of:	Prod Code **32721**	Flex Cartridge
	Prod Code **32792**	V.32 Single Line Restoral
	Prod Code **M10493**	Premium Oper Set w/ Signal Quality

TABLE 24. CODEX 3600 MODEMS, DMN DATAMUX - Sheet 2 of 2

DMN PHASE IIIB CATEGORY	DATA	EXPLANATION
3600 Modems (Cont.)		
Upgrade, Premium Modem 8 CH MUX, 2&4-Wire Restoral, to CSU/DSU Mode	NSN 8200-00-140-46961	Option
Consists of:		
Premium Oper Set	Prod Code **M10493**	w/ Signal Quality
Flex Cartridge	Prod Code **32721**	
3600 CSU/DSU Op	Prod Code **32740**	
Interface Card	Prod Code **32745**	3600 CSU/DSU
3600 Digital Modem CSU/DSU (Channel/ Data Service Unit)	Prod Code **32701-3** NSN 5895-01-364-68651	8 Channel-TDM, 56 kbps, 2&4-Wire Restoral
Characteristics:		
3600 Modem Power	120 Volts AC (± 10%) 57-63 Hertz 80 Watts	Single Phase AC Frequency Free Stand Modem
Relative Humidity	10 - 95 Percent	Non-Condensing
Operating Temp	32°F to 122°F	0°C to 50°C
Dimensions (Inches)	3.5 H x 17.25 W x 17.5 D	Standard 19 Inch Rack Shelf Mount
Weight	17.5 Pounds	Uncrated
Digital Interface	EIA 232-D	25-Pin Connector, DTE I/O Requires Shielded Cable
Analog Tx Output	0 to -15 dBm Selectable 600 Ohms Balanced	1 dB Increments Output Impedance
Analog Rx Dynamic Range	-6 dBm to -33 dBm -9 dBm to -43 dBm	On Leased Lines On Dial Lines

TABLE 25. CODEX 3500 CSU/DSU, DMN DATAMUX

DMN PHASE IIIB CATEGORY	DATA	EXPLANATION
3500 Channel/Data Service Units		
3500 CSU/DSU Nest Card	Prod Code **48003**	V.35 Single Ch
3512 CSU/DSU Free Standing	Prod Code **49152** NSN 5895-01-437-59651	Single Channel
3512 CSU/DSU Nest Card	Prod Code **49176** NSN 5895-01-437-59661	Single channel
Characteristics:		
3500 Operating Modes	Asynchronous, Synchronous, or Async to Sync	Full Duplex, Point-to-Point or Multipoint
Secondary Channel for DDS ANMS	DDS II, Full Time Ch	Pt-Pt/Multipoint
	DDS I, Derived Second Channel (DSC)	Pt-Pt only
Port 2 Option	Switch to Backup Dial Modem or Dig Data Unit	Can Configure for Line Failure
Channel Rates (kbps) (DDS I & DDS II)	1.2 - 56 (In Steps)	Synchronous Pt-Pt
	2.4, 4.8, 9.6, 19.2, 56	Sync Multipoint
	1.2 - 19.2 (In Steps)	Async Pt to Pt
	2.4, 4.8, 9.6, 19.2	Async Multipoint
Network Control Ch	Asynchronous, Binary	ANMS Compatible
Data Coding/Format	Bipolar, Return to Zero	Serial, Binary
Operating Temp	32°F to 122°F	(0°C to 50°C)
3500 CSU/DSU Power Required	110 Volts AC, 60 Hz	10 Watts Max

TABLE 26. CODEX 6250 DIGITAL TRANSMISSION MULTIPLEXER (DTM)
DMN DATAMUX

DMN PHASE IIIB CATEGORY	DATA	EXPLANATION
6250 DTM, High Speed Time Division Multiplexer (HSTDM)		
Includes: Network Port Card	Prod Code **85076/65187G01** NSN 5998-01-383-74161	For Modulus 21 Nest
Redundant Network Controller (RNC)	Prod Code **85004/65060G0** NSN 5998-01-383-74251	For Modulus 21 Nest
V.35 Digital I/F Module (DIM)	Prod Code **85039/65367G01** NSN 5998-01-383-73921	Interface (I/F)
Sync Data Card	Prod Code **85045/57553G01** NSN 5998-01-383-74331	6 RS-232 DIM Ports
Software Cartridge	Prod Code **85009/65075G03** NSN 5998-01-385-86021	Upgradable
Characteristics:		
Audio Transmission	600 Ohms Unbalanced	Port Impedance
	200-1000 Hz > 60 dB 1000-4000 Hz > 40 dB	Longitude Balance
	± .2 dB 300-3000 Hz	Freq Response
	≤ 20 dB	Idle Chan Noise
	0-400 Hz ≥ 55 dB 400-3000 Hz ≥ 65 dB	Channel Crosstalk Elimination
	29 dB Ear (ERL) 20 dB Speech (SRL)	E&M 4-Wire Return Loss (RL)
Voice Card Rate	64k PCM	a-law or mu-law
	16/24/32 kbps ADPCM	Option
Operating Temp	32°F to 122°F	(0°C to 50°C)
Power Required for Modulus 21 Nest	90-132 Volts AC 47-63 Hz	Single Phase 11 Amps rms Max
	-42 to -60 Volts DC	17 Amps Max

TABLE 27. CODEX 2185 DIGITAL BRIDGE, DMN DATAMUX

DMN PHASE IIIB CATEGORY	DATA	EXPLANATION
2185 Digital Bridge (DB), Modem/Port Sharing Device (MSD/PSD)		
2185 DB, Free Standing	Prod Code **28500** NSN 5895-01-364-68671	
2185 DB Nested Card	Prod Code **28503** NSN 5895-01-364-68681	For Modulus 18 Nest
DB Characteristics:		
2185 Data Rate Options (kbps)	.075, 1.2, 2.4, 4.8, 7.2, 9.6, 14.4, 19.2	Internal Clock (± 0.01%)
	0 - 19.2 Maximum	Network Clock
Data Format - All Devices on One 2185 DB	Asynchronous or Synchronous	Same Format and Rate Required (Common Tx Rate can differ from Common Rx Rate)
Synchronous Retiming	±4-bit Elastic Buffer	Absorbs Jitter
Data Interfaces	EIA 232-D	Subchannel Ports
Main to Subchannels	Broadcast Data to All	Simultaneously
Subchannel Tx Mode, Set Data/Ctl Option	Space Bit - Request to Send Data	Data Contention Mode
	16 Consecutive Mark Bits Disconnect	
	RTS (Request to Send) or DCD (Data Cxr Det)	Control Signal Contention Mode
Anti-Stream Time-out	25 (+2.3, -1.1) sec	Disable Subchan
Timer Actions	1.5 (+0.20, -0.01) sec	Re-Enable Timer

TABLE 28. DIGITAL A/B SWITCHES, DMN DATAMUX

DMN PHASE IIIB CATEGORY	DATA	EXPLANATION
Digital A/B Switch		
Nested	Prod Code **13401** NSN 5930-01-393-27011	
Free Standing	Prod Code **13402** NSN 5930-01-393-27001	
Clock Distribution Card	Prod Code **13405** NSN 5998-01-393-27071	Switch LRU
Switch Card	Prod Code **13406** NSN 5998-01-393-27091	Switch LRU
Power Supply	Prod Code **13407** NSN 5998-01-393-27101	Switch LRU

TABLE 29. I/F ACCESSORIES FOR DMN DATAMUX

DMN PHASE IIIB CATEGORY	DATA	EXPLANATION
Tail Circuit Elastic Buffer	Prod Code **MTE-2** NSN 5935-01-431-93871	Miniature, for Synchronous Txn
Interface (I/F) Adapter	Prod Code **13327/1100-1** NSN 5935-01-364-68521	RS-232 to EIA-530
Interface (I/F) Adapter	Prod Code **13318/1101-1** NSN 5935-01-364-68531	V.35 to EIA-530

TABLE 30. CODEX 9800 ANMS EQUIPMENT, DMN DATAMUX

DMN PHASE IIIB CATEGORY	DATA	EXPLANATION
9820 AUTOMATED NETWORK MANAGEMENT SYSTEM (ANMS)		
Primary ANMS Workstation	NSN 8200-00-140-46991	Including Cables, Licenses, etc.
9850 Workstation	Prod Code **44908**	Model 433S
Laser Printer	Prod Code **44860**	With 15 Ft Cable
Communication Application Processor (CAP)	Prod Code **44570**	
Processor Card	Prod Code **44582**	8 Ports
Expansion Card	Prod Code **44584**	16 Ports
9820 Communication Card	Prod Code **44580**	
Command Line I/F (CLI) Software	Prod Code **44642** NSN 8200-00-140-47001	Tape Cartridge
591 Line Printer, Cables, Port Card	NSN 8200-00-140-47011	Option
Line Printer	Prod Code **44910**	OKI Microline 591
Secondary ANMS Workstation	NSN 8200-00-140-48111	LAN Cable & 425t Computer
Apollo 425t Computer	Prod Code **44801**	
9810 CAP Software	Prod Code **44850** NSN 8200-00-000-42851	Software, Link Establishment(LE)

TABLE 31. STATISTICAL TIME DIVISION MULTIPLEXER (STDM)
DMN STATMUX - Sheet 1 of 2

DMN PHASE IIIA CATEGORY	DATA	EXPLANATION
Type III STDM		
Data Concentrating Exchange (DCX)		
DCX 840 Basic Unit	Prod Code **DCX8401** NSN 8200-00-140-61631	Card Frame Assy, STC/MTP Kit, BUF 3, NCAM, ARQ IV Kit, and 840
Includes:		
MTP Ckt Card Assy	Ref No **905-6657-01**	Map & Test Panel
Buffer III Assy	Ref No **905-6732-02**	
DCX ARQ IV Card Assy	Ref No **905-7344-01**	Auto Repeat Rqst
STC MK III	Ref No **X840-601612**	System Test & Ctl
Expansion Frames (2-4)	Prod Code **DCX8413** NSN 8200-00-140-62521	Card Frame Assy, BEM/BTM Kit, and BUF III
Includes:		
BEM II circuit Card	REF No **905-6661-02**	Bus Expan Module
BTM II Circuit Card	Ref No **905-6662-02**	Bus Term Module
Buffer III Assy	Ref No **905-6732-02**	
Soft Channel Kit	Prod Code **DCX1171** NSN 8200-00-140-62531	SC1 Kit
Includes:		
Soft LSC Assy-RS232	Ref No **905-7171-04**	Low Speed Channel
ARQ IV Composite Link I/F Kit	Prod Code **DCX1344** NSN 8200-00-140-62541	Interface Kit
Includes:		
DCX, ARQ IV Card Assy	Ref No **905-7344-01**	Composite Link

TABLE 31. STATISTICAL TIME DIVISION MULTIPLEXER (STDM)
DMN STATMUX - Sheet 2 of 2

DMN PHASE IIIA CATEGORY	DATA	EXPLANATION
Data Concentrating Exchange (DCX) (Cont.)		
64k Buffer III Card	Prod Code **DCX1732/905-6732-02** NSN 5998-01-383-74321	
Type III STDM - Spare Component		
ARQ I Card	Prod Code **DCX8401** NSN 8200-00-140-61631	CLIN 0003BH
Type III STDM - Option Features		
Monitor 30	Prod Code **DCX1827** NSN 5998-01-383-74441	Includes Manual
Includes:		
DCX Card, Monitor	REF No **800/MON/30**	
USO 30 Module	Prod Code **DCX9255** NSN 5998-01-383-73801	Includes Manual
Includes:		
DCX Card, USO 30	REF No **800/USO/UG**	

TABLE 32. NADIN PSN NODE PACKET SWITCH EQUIPMENT - Sheet 1 of 2

NADIN II CATEGORY	DATA	EXPLANATION
NADIN PACKET SWITCHED NETWORK (PSN)		
	Hughes Network System	
Mini-Auxiliary Service Processor (MASP)	Type **1011490-0002**	Node Processor, Storage & Call Setup
Low Speed Module (LSM)	Type **1011490-0003**	Single Card Cluster (SCC)
Medium Speed Module (MSM)	Type **1011490-0004**	SCC
Interface Card	Type **1007358-0061**	RS232 I/O,8 Ports
Interface Card	Type **1009767-0043**	RS449 I/O Module, 4 Ports
Interface Card	Type **1009798-0034**	V.35 I/O Module, 2 Ports
Bus Repeater Module	Type **1007267-0022**	
	General DataComm	
Dial-up Modem	Type **DC 596 R/M**	Variable Speed, Full Duplex
CSU/DSU	Type **DC 500G/UXR**	Selectable Rate Data Service Unit
Power Supply	Type **DPS-7A**	
	ADC Telecommunications	
Data converter Module for A/B Switch Chassis	Type **PSR-06**	Provides Data Conversion Signals for RS232/422 Compatibility for Remotely Controlled Patch Switch Equipment
A/B Switching Card	Type **PSM-03**	A/B Switching Module, Electro-Mechanical only

TABLE 32. NADIN PSN PACKET SWITCH NODE EQUIPMENT - Sheet 2 of 2

NADIN II CATEGORY	DATA	EXPLANATION
NADIN PACKET SWITCHED NETWORK (PSN) (Cont.)		
	Unisync, Inc	
Protocol Converter - Packet Assembler/ Disassembler (PAD)	Type **U0012A-12**	Interface Device for Non-X.25 Compatibility
Tandem Switch	Type **U0018-12**	Packet Assembler-Disassembler (PAD) A/B Switch

TABLE 33. RCL 8 GHZ BACKBONE HIGH DENSITY TERMINAL - Sheet 1 of 5

RADIO COMMUNICATIONS LINK (RCL) CATEGORY	DATA	EXPLANATION
GRANGER DIRECT-TO-LINE (DTL) MULTIPLEXER SYSTEM		
DTL 7300 Channel Modem	Granger **065-2795-11**	For Voice Freq (VF) Drop/Insert, ANMS, & Order Wire
I/O Impedance	600 Ohm Balanced	VF Channel
Combiner Board	Granger **065-2603-01**	
Low Pass Filter	2.54 MHz	Removes Freq Above
Switch Attenuator	0 - 33.75 dB Atten	Adjusts I/O Level
Hybrid Card, Splits or Combines	Granger **065-2605-03**	One 75 Ohm In/Out And Two 75 Ohm Out/In Ports
Card, Pilot Synchronization	Granger **065-1866-03**	For High Data Rates Master or Slave Op
Line Pilot	308 kHz	Generates & Tx Or Rx as Slave
Synchronization Tone	3825 Hz	Generates for DTL Channel Modems
Sync Logic Card, Redundant	Granger **065-2987-01**	Per ECP-27
Sync Relay Card, Redundant	Granger **065-2989-01**	Per ECP-27
HF Amplifier	Granger **065-3700-02**	Per ECP-27
FR8 MICROWAVE RADIO TERMINAL, 8 GHZ		
Baseband Signals, Input/Output	300 Hz - 8 MHz (60-4028 kHz in use)	960 Ch Baseband FDM Capability
FM Carrier Range	7.135 - 8.390 GHz	BB Freq Modulated
Tx Output Power	2 or 5 Watts	Per RF Pwr Amp Used

TABLE 33. RCL 8 GHZ BACKBONE HIGH DENSITY TERMINAL - Sheet 2 of 5

RADIO COMMUNICATIONS LINK (RCL) CATEGORY	DATA	EXPLANATION
FR8 MICROWAVE RADIO TERMINAL, 8 GHZ (Cont.)		
Rx Intermediate Frequency (IF)	70 MHz	Receivers Downconvert to IF
Baseband In/Outputs	75 Ohm Unbalanced,	Impedance Nominal, Granger BB
IF Inputs/Outputs	50 Ohms Unbalanced	Impedance, Nominal
FR8 Tx Equipment, Ch A & Ch B		
Transmit Bridge	P/N **SL252**	For Granger Mux BB
Tx BB Amplifier	P/N **SL250**	Dual Mux BB Input
Tx Deviatable Osc	P/N **4400B**	W/Voltage Controlled Attenuator (VCA)
ALC Network	P/N **4411A**	For Pwr Amp Control of VCA Level
2 Watt Power Amp	P/N **CMA43241AA**	AA=Freq </=7700 MHz
2 Watt Power Amp	P/N **CMA43241AB**	AB=Freq > 7700 MHz
5 Watt Power Amp	P/N **CMA43746AA**	AA=Freq </=7700 MHz
5 Watt Power Amp	P/N **CMA43746AB**	AB=Freq > 7700 MHz
FR8 Rx Equipment, Ch A & Ch B		
Rx Down Converter (D/C)	P/N **4401A**	Requires Rx Osc of Proper Freq
	or	
Rx Dual D/C	P/N **4402A**	2 D/Cs & Rx Osc, if Space Diversity Ant
Rx Oscillator	P/N **149A-xxxx**	Microwave Freq Gen
IF Combiner	P/N **WY12**	For Space Diversity Ant Install'n Only
IF AGC Amplifier	P/N **YJ105**	W/ 2 Equal IF Outs

TABLE 33. RCL 8 GHZ BACKBONE HIGH DENSITY TERMINAL - Sheet 3 of 5

RADIO COMMUNICATIONS LINK (RCL) CATEGORY	DATA	EXPLANATION
FR8 Rx Equipment, Ch A & Ch B (Cont.)		
FM Receiver	P/N **SL246**	W/ 2 Equal BB Outs, To BB Switch & Pwr Amp if needed
Rx Baseband Amp	P/N **SL249**	To Separate BB Sw
Baseband Switch	P/N **SL248**	To Granger MUX
8 GHZ ANTENNA SYSTEM		
Microwave Antenna	8, 10, or 12 Foot Diameter	Parabolic Reflector Sized/Route, with Shed-Ice Unheated Radome If Required
Waveguide, Rectangular	Type **CPR112G**	Used Within 8 GHz Radio Bays
Waveguide, Elliptical	Type **GEP-78**	From 8 GHz Radio Bays to Antennas
GEP-78 Attenuation	1.8 dB per 100 Feet	Loss At 8 GHz
Waveguide Compressor /Dehydrator Unit	Gabriel Model **MX200**	At 0-7,000 Feet Low Altitude, or
	Gabriel Model **MX200HA**	At 7,000-15,000 Ft High Altitude
Waveguide Internal Pressure Limits	1.5 - 10 psig, (Regulated to 5 psig)	Damage if Higher, Alarm if Lower
Dehydrator Output Line, Relative Humidity (RH) Range	Below 10-15 Percent	Output Air Line Visual Indicator, Pink = RH Too High, Blue = RH In Range

TABLE 33. RCL 8 GHZ BACKBONE HIGH DENSITY TERMINAL - Sheet 4 of 5

RADIO COMMUNICATIONS LINK (RCL)		
CATEGORY	DATA	EXPLANATION
RCL AUTOMATIC NETWORK MANAGEMENT SYSTEM (ANMS)		
ACORN Central		
ACORN Sys Processor	AST Premmia 4/66d Microcomputer	486 PC with Windows Password Protected Operating System
	RocketPort Octacable	From RocketPort Card Creates P1-P8
ACORN Network Controller (ANC)	Upgraded **ACORN S/W**	ANC I/F with AST Serial Port 1
ANC Circuit Packs	P/N **MC1P060-A1** & P/N **MC1P061-A1**	Control for Local & Remote ACORN Hubs
Power Supply	P/N **HE 381**	For ANC
System Printer	AMT ACCEL-535	I/F to AST Serial Port 2
ACORN Hub	Provides Up to 8 Serial Ports	Polls Up To 60 Satellite Units
Circuit Packs	P/N **AKR1/MC1P064** P/N **AKR2** P/N **AKS1**	For ACORN Hub
AKR1 EPROM	P/N **ED-1P754-30**	For ACORN Hub
Power Supply	P/N **DCS50**	For ACORN Hub
Memory	P/N **ZT8820**	For ACORN Hub
EPROM-8820 (Kit)	P/N **845600246**	For ACORN Hub
MCPU	P/N **ZT8814**	For ACORN Hub
EPROM-8814 (Kit)	P/N **845600238**	For ACORN Hub

TABLE 33. RCL 8 GHZ BACKBONE HIGH DENSITY TERMINAL - Sheet 5 of 5

RADIO COMMUNICATIONS LINK (RCL) CATEGORY	DATA	EXPLANATION
ACORN Satellite Unit	Monitors Eqpt Status & Reports by Modem	Reports Alarms at Local/Remote Sites
Main Card	Circuit Pack	One/Satellite Unit
Scan Card, Satellite (Sat) Unit	32 Scan Points & 8 Control-Switch Pts	One or Two Cards/ Sat Unit
Main Card Modem, Port Connections	Inbound (IB) Port, Transmits Toward ACORN Hub Only	Hub↔IB OB↔IB OB↔ (Sat, Sat) (Daisy-Chained)
	Outbound (OB) Port, Transmits Inward to its Satellite (Sat) Unit IB & Outward to the Next Sat Unit IB	Terminate Final OB Port
SCPU w/EPROM	P/N **MC1P062-A1/AKN1**	For Satellite Unit
Circuit Pack	P/N **AKP1**	For Satellite Unit
Modem Interface	P/N **AKT1**	For Satellite Unit

TABLE 34. 900 MHZ LOW DENSITY RCL (LDRCL) STAND ALONE LINK
Sheet 1 of 4

LDRCL - UHF ANALOG POINT-TO-POINT LINK		
CATEGORY	DATA	EXPLANATION **UHF**
ANALOG LDRCL EQUIPMENT (Not at ARTCCs in 1997)		
900 MHz Analog Terminal		
960 MHz Analog Radio	Series **MDS-960**	Microwave Data Sys Point-to-Point Series
General:		
Frequency Range	928-960 MHz	
Channel Capacity	1-15 Voice	1-12 Typ w/Analog MUX
Input Voltage	48 VDC Standard 120/240 VAC Optional	12,24,125 VDC Options
Input Power	≤ 60 Watts ≤ 100 Watts	Non-Standby Hot-Standby
Transient Protection	2500 Volt Isolation	On Power Supply and Keying & Alarm Ckts
Battery Backup	AC Powered Models	
Alarm Outputs	Form C Dry Contact Closure	Units 1 & 2 Alarms and AC Power Failure
Pre/De Emphasis	Available	With CCIR, EIA 6dB, or FLAT
Duplexer	External Rack Mount	Standard
Transmitter:		
Power Output	5 Watts, Standard	At Antenna Connector
Output Impedance	50 Ohms	
Frequency Stability	±0.0015%	

TABLE 34. 900 MHZ LOW DENSITY RCL (LDRCL) STAND ALONE LINK
Sheet 2 of 4

LDRCL - UHF ANALOG POINT-TO-POINT LINK		
CATEGORY	DATA	EXPLANATION
900 MHz Analog Terminal (Cont.)		
Transmitter: (Cont.)		
Spurious & Harmonic Emissions	-80 dB Down	From 932-944 MHz
	-60 dB Down	At Other Frequencies
Duty Cycle	Continuous	Unattended
Audio Input Level	-10 to -35 dBm	Main Port, Adjustable
	-25 dBm	Auxiliary Ports, 2
Frequency Response	±0.5 dB	0.3 to 60 kHz
Audio In Impedance	75 Ohm Unbalanced	BNC Connector
Keying Options	Continuous	External
Receiver:		
Sensitivity	-90 dBm	For 30 dB S/N
Frequency Stability	±0.0015%	
Fault alarm (Analog Interface)	Westronics **WS-2000**	32 Alm/Status Pts & 8 Control Points
Other Equipment:		
FDM Multiplexer	Microtel	w/UHF Multichan Link
FDM Mux Chan Card	4-Wire E&M	Analog
Jackfield	TRIM **787-0029-001**	6-Wire
Modem, 0-4 kHz	Model **202T**	Extra Modem Reqd if ACORN Demarc >100 Ft from LDRCL Eqpt
Coax Cable	Foam Dielectric	Low Loss

TABLE 34. 900 MHZ LOW DENSITY RCL (LDRCL) STAND ALONE LINK
Sheet 3 of 4

LDRCL - UHF ANALOG POINT-TO-POINT LINK

CATEGORY	DATA	EXPLANATION
900 MHz Analog Terminal (Cont.)		
900 MHz Antennas (Not at ARTCCs in 1997)		
Radiation Systems	Mark Antennas Div	Need Exact Oper Freq
Parabolic Grids & Dishes:		
4 Ft Grid Parabolic	Model **P-8A48G-2**	930-950 MHz Antenna
6 Ft Grid Parabolic	Model **P-8A72G-2**	930-950 MHz Antenna
8 Ft Grid Parabolic	Model **P-8A96G-2**	Dish Ant, 930-950 MHz
10 Ft Grid Parabolic	Model **P-8A120G-2**	Dish Ant, 930-950 MHz
Parabolic Cylindrical Reflectors:		
Parabolic Cylinder Reflector Antennas	Model **MG-9A44GM** or	Mini Grid 890-960 MHz
	Model **SH-6A72GM**	Short Haul 675-960 MHz
(Parabolic Cylindrical Antenna Data is on Sheet 4)		

TABLE 34. 900 MHZ LOW DENSITY RCL (LDRCL) STAND ALONE LINK
Sheet 4 of 4

LDRCL - UHF ANALOG POINT-TO-POINT LINK		
Characteristic	**Data**	
900 MHz Antennas (Cont.)		
Parabolic Cylinder Reflector Antennas (Not at ARTCCs in 1997)		
Radiation Systems Mark Antennas Model	**MG-9A44GM**	**SH-6A72GM**
Special Type	Mini Grid	Short Haul
Frequency Range	890-960 MHz	675-960 MHz
Band Width	20 MHz Maximum	
Gain	13.5 dBi @ 950 MHz	19 dBi Min at 890 MHz
Max Minor Lobe Ratio	15 dB	15 dB
Impedance	50 Ohm	50 Ohm
VSWR	1.3:1 Max Across the Band	1.3:1 Max, 20 MHz BW 1.1:1 Spot Frequency
Horizontal Beam Width	18° Max (Half Power)	13° Max @ 890 MHz
Frnt/Back Gain Ratio	23 dB	20 dB
Maximum Power	100 Watts	300 Watts
Termination	N Female Connector	N Female Connector
Weight	7 Pounds	30 Pounds
Width	44 Inches	72 Inches
Height	13.5 Inches	36 Inches
Depth w/Feed & Mount	17 Inches	36 Inches
Operational @ Wind Load with 1/2 Inch Radial Ice	100 MPH	100 MPH

TABLE 35. 1.8 GHZ LOW DENSITY RCL (LDRCL) EQUIPMENT - Sheet 1 of 2

LDRCL - MICROWAVE DIGITAL LINK

CATEGORY	DATA	EXPLANATION
DIGITAL 1.8 GHZ LDRCL SYSTEM		
NOTE: 1.8 GHz LDRCLs have been modified to 8 GHz LDRCLs at most ARTCCs. See 8 GHz LDRCL equipment after modification.		
1.8 GHz LDRCL Equipment (1.7 GHz Band Unavailable as of 1999)		
1.8 GHz Radio		
Digital Microwave Radio	Rockwell Collins P/N **MDR-5202**	8 DS1 Channels, 3.2 MHz RF Bandwidth
Frequency Band	1.7-2.3 GHz	1.7-1.85 GHz & 2.2-2.29 GHz LDRCL Use
Tx Freq Stability	0.001 Percent	
Tx Power Output	31 dBm Maximum 30 dBm Maximum 18 dBm Nominal	With Auto Pwr Ctl Without APC With APC
Rcvr Threshold, Hot Standby Config	-77.5 dBm A Branch & -69.5 dBm B Branch	With Branching Losses & BER = 10^{-6}
Fade Margin	55 dB (w/o Dispersion)	For BER = 10^{-6}
Interference Levels:		
Cochannel (CCI)	33 dB	2 Sites-Same Freq
Adjacent Channel	-10 dB	Lower or Higher Ch
T/R Power Consumed	112 Watts 94 Watts	Typical w/o APC With APC
1.8 GHz Terminal Equipment		
D4 Channel Bank, Rack Mount	Wescom Model **360-22**	24 Ch Units, FCC Part 15 Compliant
Channel Bank Card, Extended Range (ER)	Wescom Model **3652-35**	4-Wire E&M/ER, 600 Ohm Impedance

TABLE 35. 1.8 GHZ LOW DENSITY RCL (LDRCL) EQUIPMENT - Sheet 2 of 2

LDRCL - MICROWAVE DIGITAL LINK CATEGORY	DATA	EXPLANATION
1.8 GHz Terminal Equipment (Cont.)		
Test Level Point (TLP) Typical	Xmt = -16 dBm Nominal Rcv = +7 dBm Nominal	Can Adjust(Xmt&Rcv) +13.0 to -19.5 dBm
Digital Jackfield	6-Wire	
Modem, 0-4 kHz		
Battery Charger/ Eliminator System	PCP Model **HFE-24-xxx**, 16, 25, or 50 Amps	-48 VDC, Amps are Load Specific
Harmonic Distortion Filter		for Battery Charger /Eliminator System
Coax Feedline, Air Dielectric	7/8 Inch Diameter	Pressurized Line to Antenna
Dehydrator	P/N **MT-300-101**	For Pressurized Air
1.8 GHz Antennas		
Radiation Systems	Mark Antennas Div	Need Exact Op Freq
Grid Parabolic Dish Antennas	Model **P-17A72G** Model **P-17A96G** Model **P-17A120G**	6 Foot Diameter 8 Foot Diameter 10 Foot Diameter
Solid Parabolic Dish Antennas	Model **P-17A72L** Model **P-17A96L** Model **P-17A120L**	6 Foot Diameter 8 Foot Diameter 10 Foot diameter
Radome, Unheated	Ice Shedding Model **R-72W** Model **R-96W** Model **R-120W**	Gel-Coat Surface 6 Foot Diameter 8 Foot Diameter 10 Foot Diameter
(See 1.8 GHz Antenna Data in Tables 36 & 37.)		

TABLE 36. MICROWAVE 1.8 GHZ GRID PARABOLIC DISH ANTENNAS

GRID ANTENNA CHARACTERISTIC	P-17A72G 6 Ft Dia	P-17A96G 8 Ft Dia	P-17A120G 10 Ft Dia
1.700-1.850 GHz Operation Range (Specify Frequency and Antenna Diameter)			
Gain - Low	27.8 dBi	30.3 dBi	31.5 dBi
- Medium	28.3 dBi	30.9 dBi	32.5 dBi
- High	28.7 dBi	31.3 dBi	32.9 dBi
1/2 Pwr Bandwidth	6.2°	4.7°	3.9°
Front/Back Ratio	36 dB	39 dB	42 dB
VSWR, Max - Std	1.2	1.1	1.1
- Low	1.10	1.06	1.06
Operational	70 MPH Wind	70 MPH Wind	70 MPH Wind
Antenna Survival Conditions	125 mph Wind with 1/2 inch Radial Ice and Unattended	125 mph Wind with 1/2 inch Radial Ice and Unattended	125 mph Wind with 1/2 inch Radial Ice and Unattended
Mount Hdwre: -1	1.9"-3.5" O.D. Pipe	1.9"-3.5" O.D. Pipe	1.9"-3.5" O.D. Pipe
-2 (4" IPS Pipemount)	4.5" O.D. Pipe	4.5" O.D. Pipe	4.5" O.D. Pipe

TABLE 37. MICROWAVE 1.8 GHZ SOLID PARABOLIC DISH ANTENNAS

SOLID ANTENNA CHARACTERISTIC	**P-17A72L** 6 Ft Dia	**P-17A96L** 8 Ft Dia	**P-17A120L** 10 Ft Dia
1.700-1.850 GHz Operation Range (Specify Frequency and Antenna Diameter)			
Gain - Low	28.0 dBi	30.5 dBi	32.4 dBi
- Medium	28.4 dBi	30.9 dBi	32.8 dBi
- High	28.8 dBi	31.3 dBi	33.1 dBi
1/2 Pwr Bandwidth	6.2°	4.7°	3.7°
Front/Back Ratio	37 dB	41 dB	43 dB
VSWR (May vary if N Female Term)	1.10	1.06	1.06
Operational	70 MPH Wind	70 MPH Wind	70 MPH Wind
Antenna Survival Conditions	125 mph Wind with 1 inch Radial Ice and Unattended	125 mph Wind with 1 inch Radial Ice and Unattended	125 mph Wind with 1 inch Radial Ice and Unattended

TABLE 38. 8 GHZ LOW DENSITY RCL (LDRCL) EQUIPMENT - Sheet 1 of 3

LDRCL - MICROWAVE DIGITAL LINK CATEGORY	DATA	EXPLANATION
8 GHZ LDRCL SYSTEM (Replaces 1.8 GHz LDRCL)		
8 GHz LDRCL Digital Radio		
Microwave Radio, Low Density	Rockwell Collins Type **MDR-6508-X**	Alcatel 6000 Series, **-X** = Qty of DS1 Ch
Frequency Band	7.135-8.390 GHz	= RCL Backbone Band
Transmitter:		
FCC RF B/W (MHz)	1.25,2.5,3.75,5.25	For 2,4,8,12 DS1 Ch
Trellis Code Modulation (TCM)	32 State, Digital Mod of Dig Signal	Low BER without Increased Bit-Rate
Data Rate (Mbps)	3.09,6.18,12.36,18.53	For 2,4,8,12 DS1 Ch
Efficiency (bps/Hz)	2.5, 2.5, 3.3, 3.9	For 2,4,8,12 DS1 Ch
Baud Rate (Mbps)	0.77,1.46,2.92,4.38	For 2,4,8,12 DS1 Ch
Tx Freq Stability	± 0.001 Percent	Crystal Oscillator
RF Pwr Amp Tx Level	+28 dBm +15 dBm	Standard Power Out Low Power Output
Receiver:		
Receive Signal	-10 dBm Maximum	with 10^{-3} BER
Receiver Threshold, (Non-Standby System)	-87,-84,-81,-79 dBm	For 2,4,8,12 DS1 Ch, Typical @ 10^{-6} BER
System Gain, Std Pwr (Non-Standby System)	116,113,110,107 dB	For 2,4,8,12 DS1 Ch, Typical @ 10^{-6} BER
Dispersive Fade Margin	68, 64, 55, 52 dB	For 2,4,8,12 DS1 Ch, @ 10^{-3} BER
Threshold, Cochannel Interference (CCI)	28 dB = Desired minus Undesired (D/U) Signal Levels	2 Ch in Range & on Same Frequency [i.e. -30 -(-58) = 28 dB]
Adjacent Channel Interference (ACI)	-8 dB Threshold	Lower or Higher Adjacent Channel

TABLE 38. 8 GHZ LOW DENSITY RCL (LDRCL) EQUIPMENT - Sheet 2 of 3

LDRCL - MICROWAVE DIGITAL LINK CATEGORY	DATA	EXPLANATION
8 GHz LDRCL Digital Radio (Cont.)		
6508 Radio Characteristics:		
Physical Size	19"W x 13"D x 33.25"H	Occupied Rack Space
Weight, Hot Standby	155 Pounds Typical	Config Dependent
RF Interface I/O:	Waveguide (W/G) Type	Flange for W/G
MDR-6X02	Coaxial	Type N Female
MDR-6X06	WR-137	CMR-137, 6-32 Threads
MDR-6X08	WR-112	UG-51/U, 8-32 Threads
DS1 Channels I/O	37 Pin D Style	Interface Connector
DS1 Line Rate	1.544 Mbps	± 130 ppm
DS1 Line Impedance	100 Ohms ± 5 %	Balanced
DS1 Cross Connect	660 Ft Max Distance	
Primary Voltage In	19.5 to 56 VDC	1 Input Tied Ground
T/R Power Consumed:	Hot Standby, Off-Line	Auto Power Control (APC) Always Low
Low Pwr Pwr Amp (PA)	90 Watts Consumed	APC High or Low
Standard Power PA	145 Watts Consumed 128 Watts Consumed	APC High APC Low (PA Depend)
High Power PA	177 Watts Consumed 150 Watts Consumed	APC High APC Low (PA Depend)
Operational Conditions:		
Ambient Temperature	-32°F to 122°F	Per Specification
Relative Humidity	5 to 95 Percent	No Condensation
Altitude	-328 Ft to 16,404 Ft	Operating
Duty Cycle	Continuous	Unattended

TABLE 38. 8 GHZ LOW DENSITY RCL (LDRCL) EQUIPMENT - Sheet 3 of 3

LDRCL - MICROWAVE DIGITAL LINK CATEGORY	DATA	EXPLANATION
8 GHz LDRCL 6508 Radio Terminal LRUs		
Power Dist Unit	Alcatel Telcom P/N **695-6200-001**	
Audio Transformer	P/N **690-0228-001**	Rear Panel Mounted
Lorain Pwr Supply	P/N **270-0038-010**	±19.5 to ±56 V Batt
RF Coax Relay Switch	P/N **694-0239-002**	
Modulator, UD-35()	P/N **644-0XXX-0XX**	Frequency Dependent
Demodulator, UD-36()	P/N **644-0XXX-0XX**	Frequency Dependent
Std Pwr Amp, UD-51M()	P/N **822-0185-001,2,3**	Frequency Dependent
Low Pwr Amp, UD-51V-1	P/N **644-0132-001**	
Freq Source, UM-62X-5	P/N **622-9203-005**	LO Frq=1930-2125 MHz
Relay I/F, AE-27AE-1	P/N **644-0089-001**	Dig Shelf Module
Audio I/F, AE-31J-1	P/N **644-0090-001**	Dig Shelf Module
Office Surveillance System (OSS) I/F, 4 External Interfaces	P/N **644-0091-001**, Type AE-35T-1	Rear: Monitor-Ctl Sys MCS-11 15-pin D-Style Ribbon Conn; RS-232 & 4-Wire Audio 9-pin D-Style Conn; Aud Jack
Controller, AE-37S-1	P/N **644-0092-001**	Dig Shelf Module
DS1 I/O I/F, DX-35K-1	P/N **694-0094-001**	Req Cap Key/ea Module
Rx I/F, DX-36G-1	P/N **695-0095-001**	Req Cap Key/ea Module
32 TCM Capacity Key	P/N **695-5731-001,2,3**	Cap Key: 2, 4, 8 DS1 Ch MDR-6508-2,-4,-8
DS1 LBO Card	P/N **695-7044-001**	Builds Out 1-8 Lines
ADU Card	P/N **695-7045-001**	
Transmission Status Monitor TSM-2500 Polling Engine	Type AE-35S-1	Alcatel Network Sys 4 Synchronous Ports

TABLE 39. 23 GHZ LOW DENSITY RCL (LDRCL) EQUIPMENT

LDRCL - MICROWAVE DIGITAL LINK		
CATEGORY	DATA	EXPLANATION
23 GHz LDRCL Equipment (Not at ARTCCs in 1997)		
23 GHz Digital Radio	Microwave Net **MN-23**	1-8 DS1 Lines
Fault alarm (Digital Interface)	Westronics **WS-2000**	32 Alm/Status Pts & 8 Control Points
Channel Bank	Charles Ind **360-22**	
Channel Bank Card	4-Wire E&M, ER	
DSX-1 Module	-48 VDC	
DS1 Cross Connect	Telect **010-2604-0313**	
Modem, 0-4 kHz		
Battery Charger/ Eliminator System	PCP P/N **HFE-24-XXX** 16, 25, or 50 Amps	-48 VDC, Amps are Load Specific
Harmonic Distortion Filter		Required w/ Battery Chg/Elim System
Elliptical Waveguide	23 GHz	Pressurized
Waveguide Dehydrator	P/N **MT-300-101**	For Elliptical WG
23 GHz Antennas	4 Ft Dish	Typical
2 Foot Diameter	Radiation Systems Mark Antennas Div **P-230B24**	21.2-23.6 GHz
4 Foot Diameter	**P-230C48**	SP, 21.2-23.6 GHz