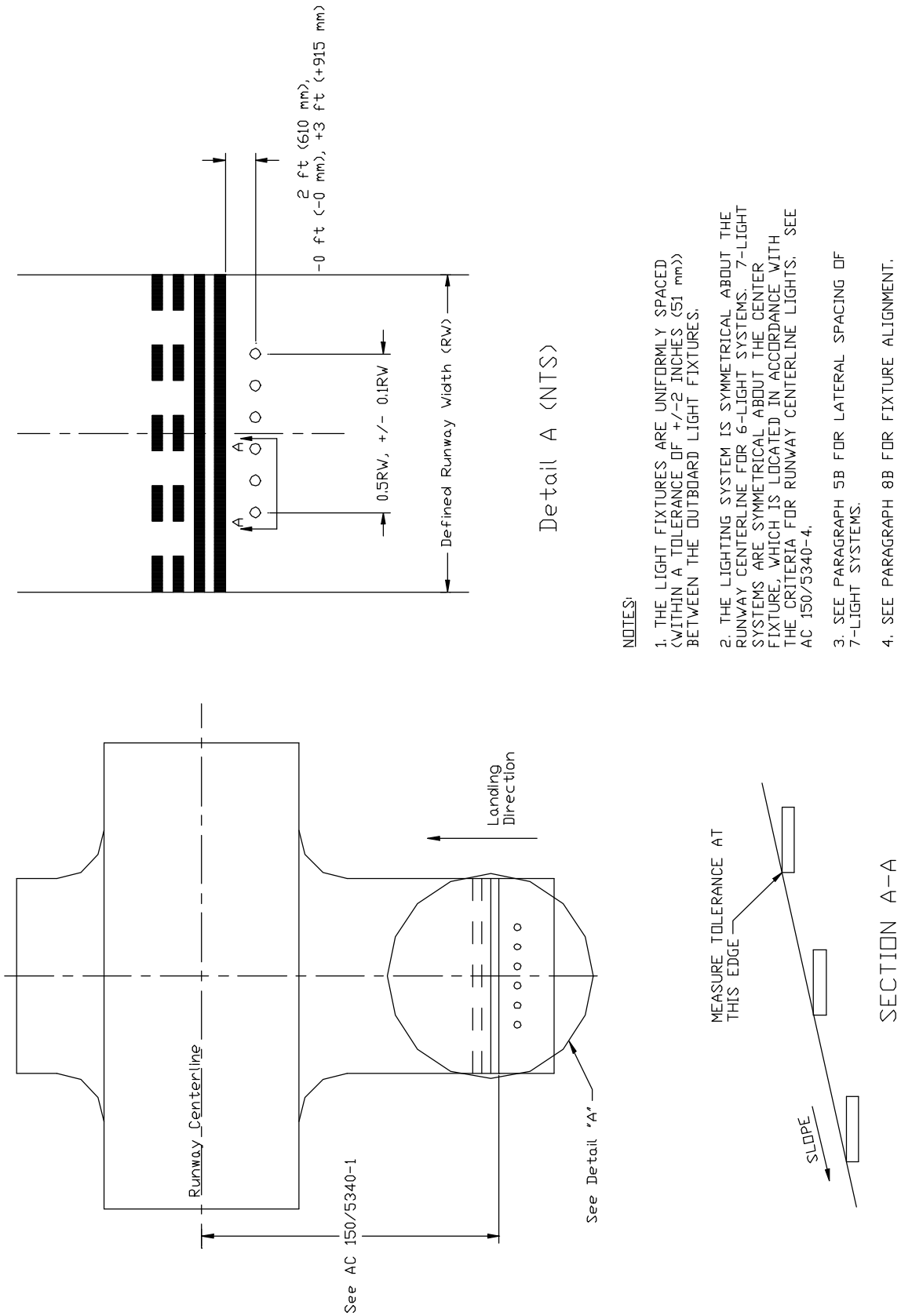

NOTES:

1. THE LIGHT FIXTURES ARE UNIFORMLY SPACED (WITHIN A TOLERANCE OF +/-2 INCHES (51 mm)) BETWEEN THE OUTBOARD LIGHT FIXTURES.

2. THE LIGHTING SYSTEM IS SYMMETRICAL ABOUT THE RUNWAY CENTERLINE FOR 6-LIGHT SYSTEMS. 7-LIGHT SYSTEMS ARE SYMMETRICAL ABOUT THE CENTER FIXTURE, WHICH IS LOCATED IN ACCORDANCE WITH THE CRITERIA FOR RUNWAY CENTERLINE LIGHTS. SEE AC 150/5340-4.

3. SEE PARAGRAPH 5B FOR LATERAL SPACING OF 7-LIGHT SYSTEMS.

4. SEE PARAGRAPH 8B FOR FIXTURE ALIGNMENT.

FIGURE 1. TYPICAL LAYOUT FOR LAND AND HOLD SHORT LIGHTS

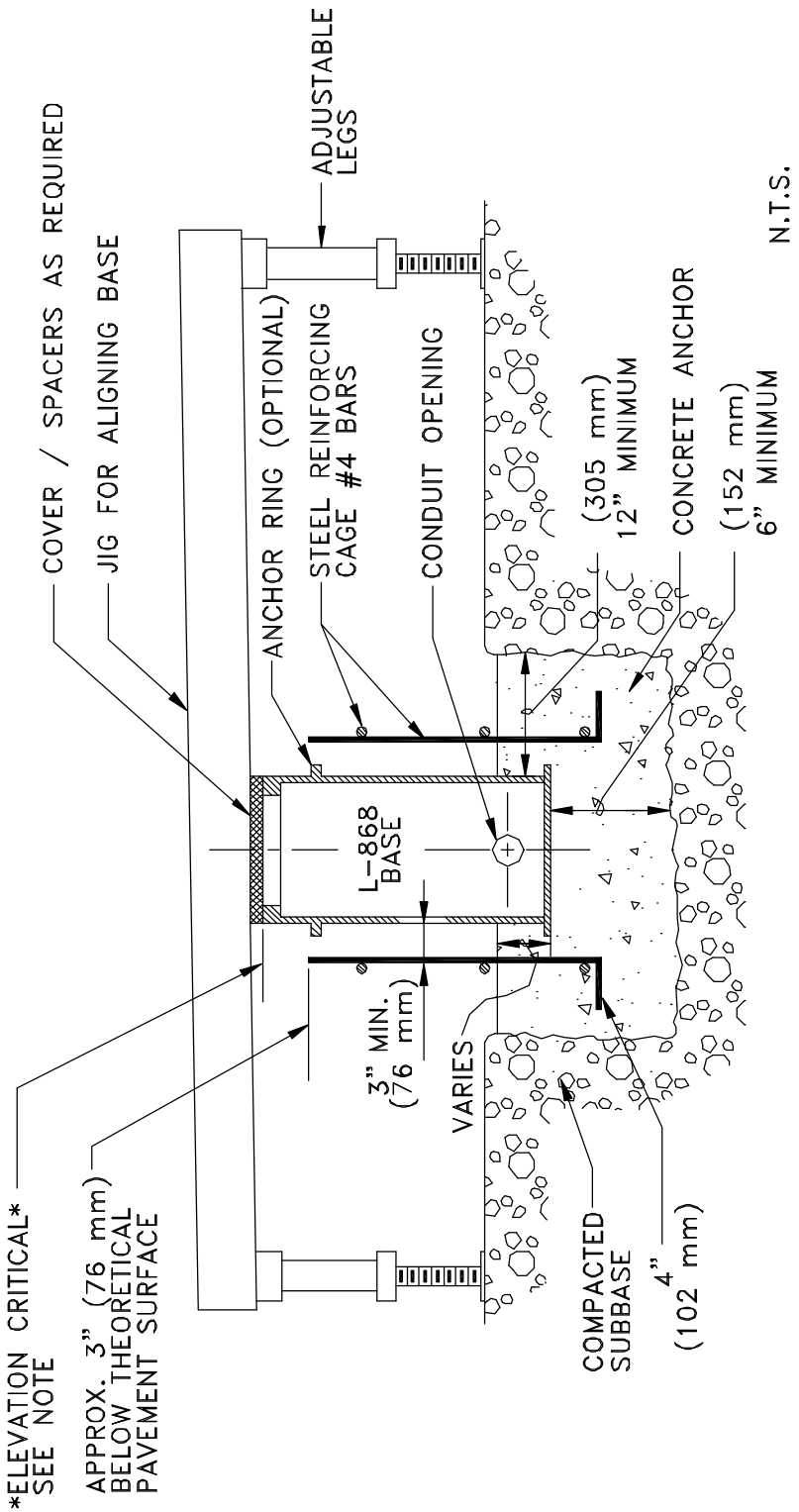

NOTE:

BASE MUST BE POSITIONED TO PERMIT PASSAGE OF PAVING MACHINE AND TO ACCOMMODATE FLANGE RING AND FIXTURE. IF THE BASE ELEVATION IS SET TOO HIGH IT WILL INTERFERE WITH PAVING OPERATIONS AND RESULT IN COSTLY CORRECTIVE ACTION. IF THE BASE IS SET TOO LOW, THICKER FLANGE RINGS OR SPACER RINGS CAN BE USED FOR CORRECTIONS. IN SETTING THE BASE ELEVATION, ALLOW FOR AT LEAST 1/2 INCH (13 mm) VARIATION IN THEORETICAL PAVEMENT SURFACE ELEVATION PLUS 1/4 INCH (6 mm) ADDITIONAL SAFETY MARGIN.

FIGURE 2. USE OF ALIGNMENT JIG, NO REFERENCE EDGE AVAILABLE, BASE AND CONDUIT SYSTEM

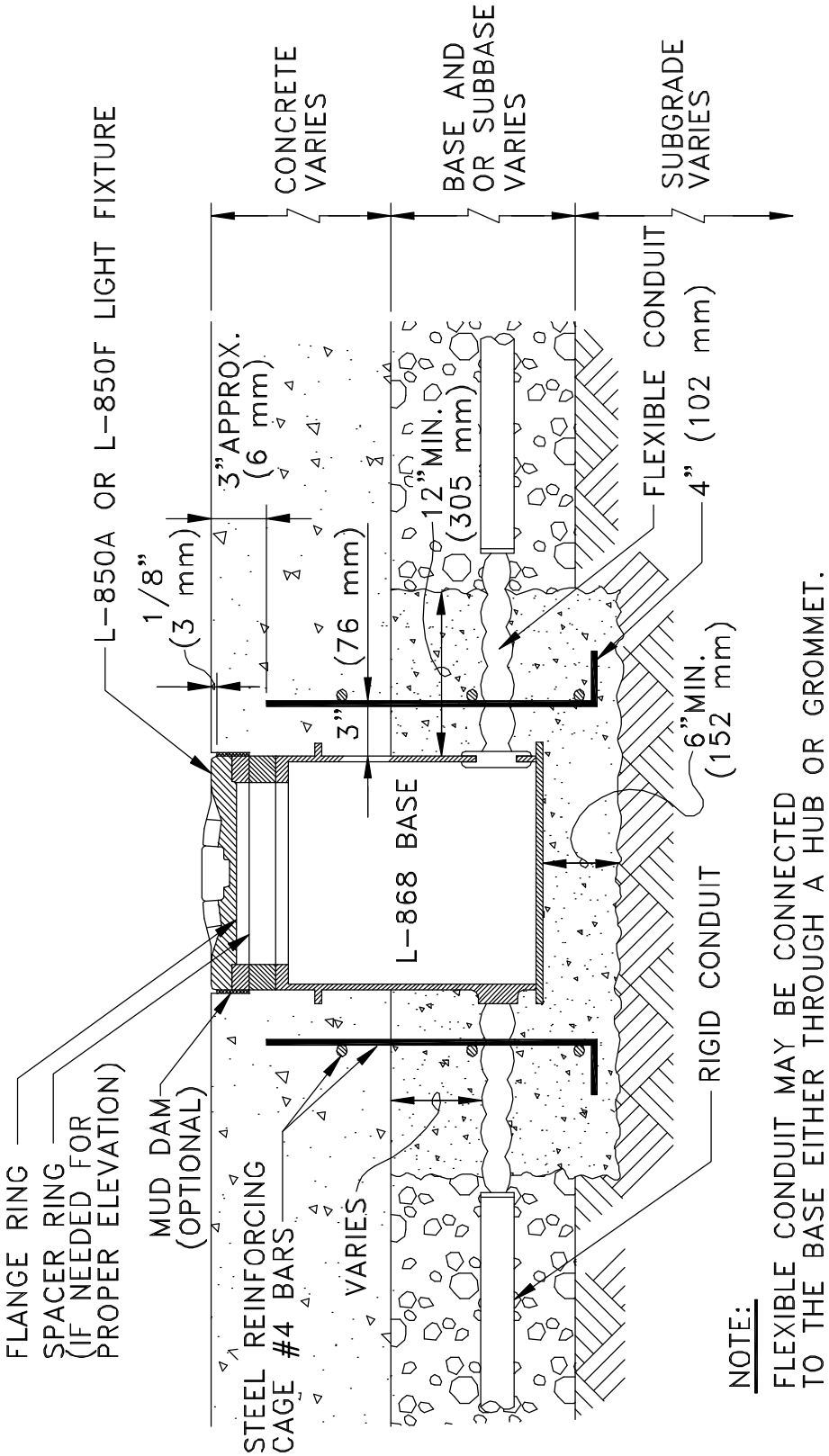

FIGURE 3. SECTION THROUGH BASE AND ANCHOR, BASE AND CONDUIT SYSTEM, RIGID PAVEMENT

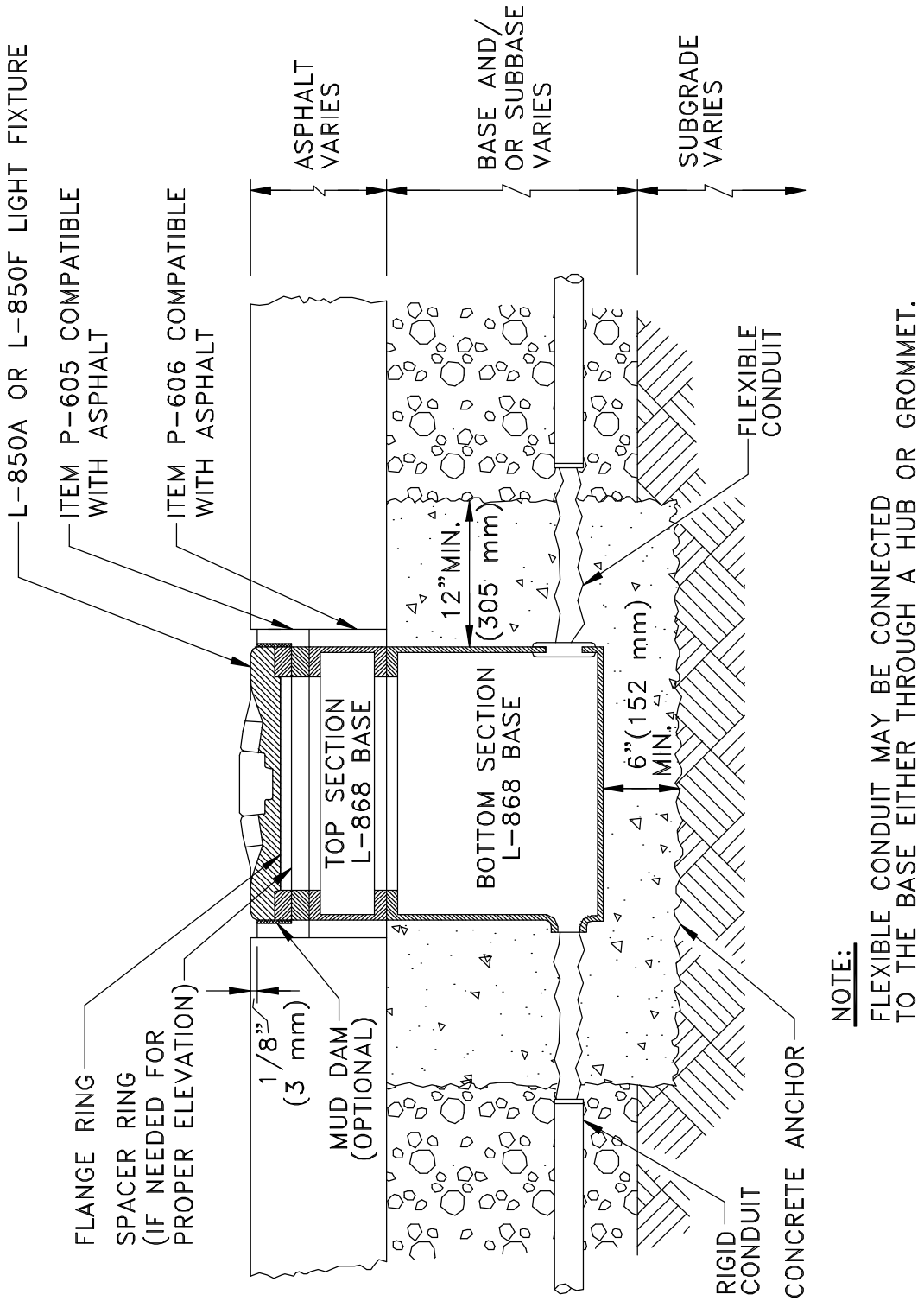

NOTE:
FLEXIBLE CONDUIT MAY BE CONNECTED TO THE BASE EITHER THROUGH A HUB OR GROMMET.

FIGURE 4. SECTION THROUGH BASE AND ANCHOR, BASE AND CONDUIT SYSETM, FLEXIBLE PAVEMENT

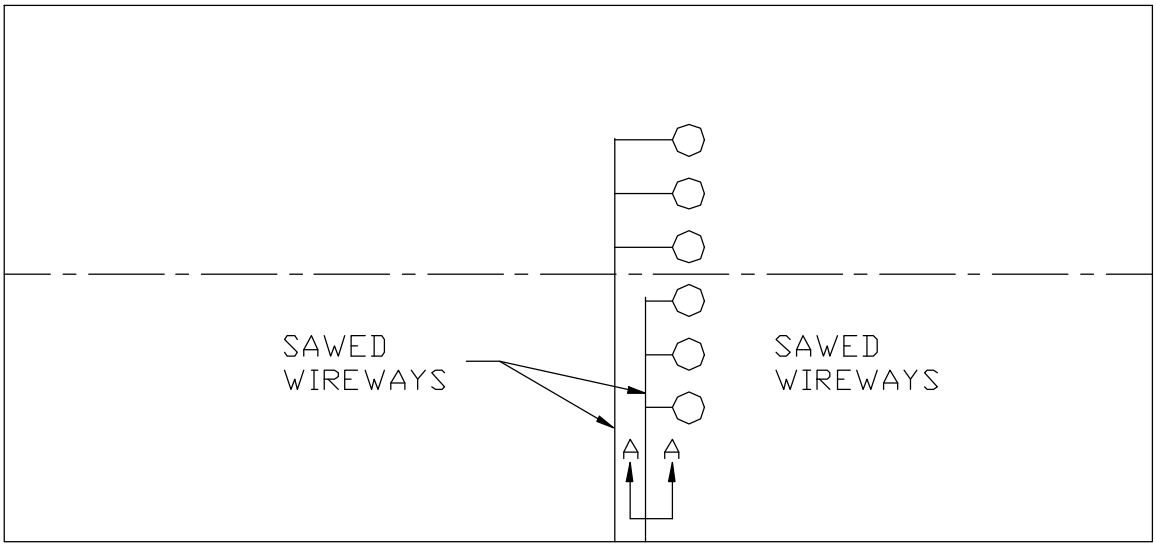

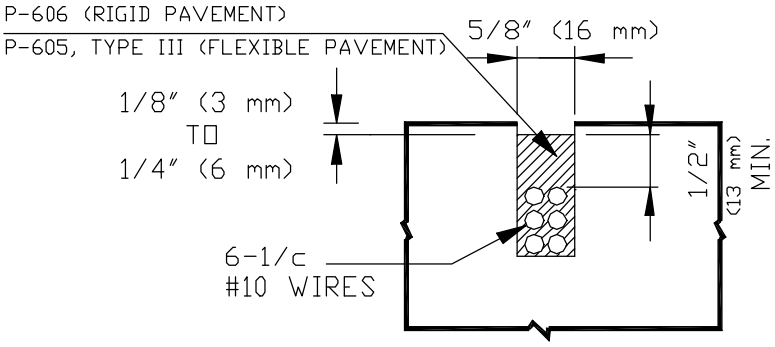

SECTION A-A

GENERAL NOTES

1. THE INSTALLATION DETAILS SHOWN ARE FOR RIGID OR FLEXIBLE PAVEMENT UNLESS OTHERWISE SPECIFIED.

2. THE DIAMETERS AND DEPTHS OF HOLES FOR DIRECT-MOUNTED LIGHTING FIXTURES ARE IN ACCORDANCE WITH FIGURE 6.

3. THE ALIGNMENT OF DRILLED HOLES FOR THE FIXTURES SHOULD NOT VARY MORE THAN 2 INCHES.

4. WHERE WIREWAYS CROSS JOINTS IN RIGID PAVEMENT, THEIR DEPTH IS INCREASED AS SHOWN ON PLANS. SEE FIGURE 6.

FIGURE 5. TYPICAL WIREWAY INSTALLATION DETAILS FOR LAND AND HOLD SHORT LIGHTS

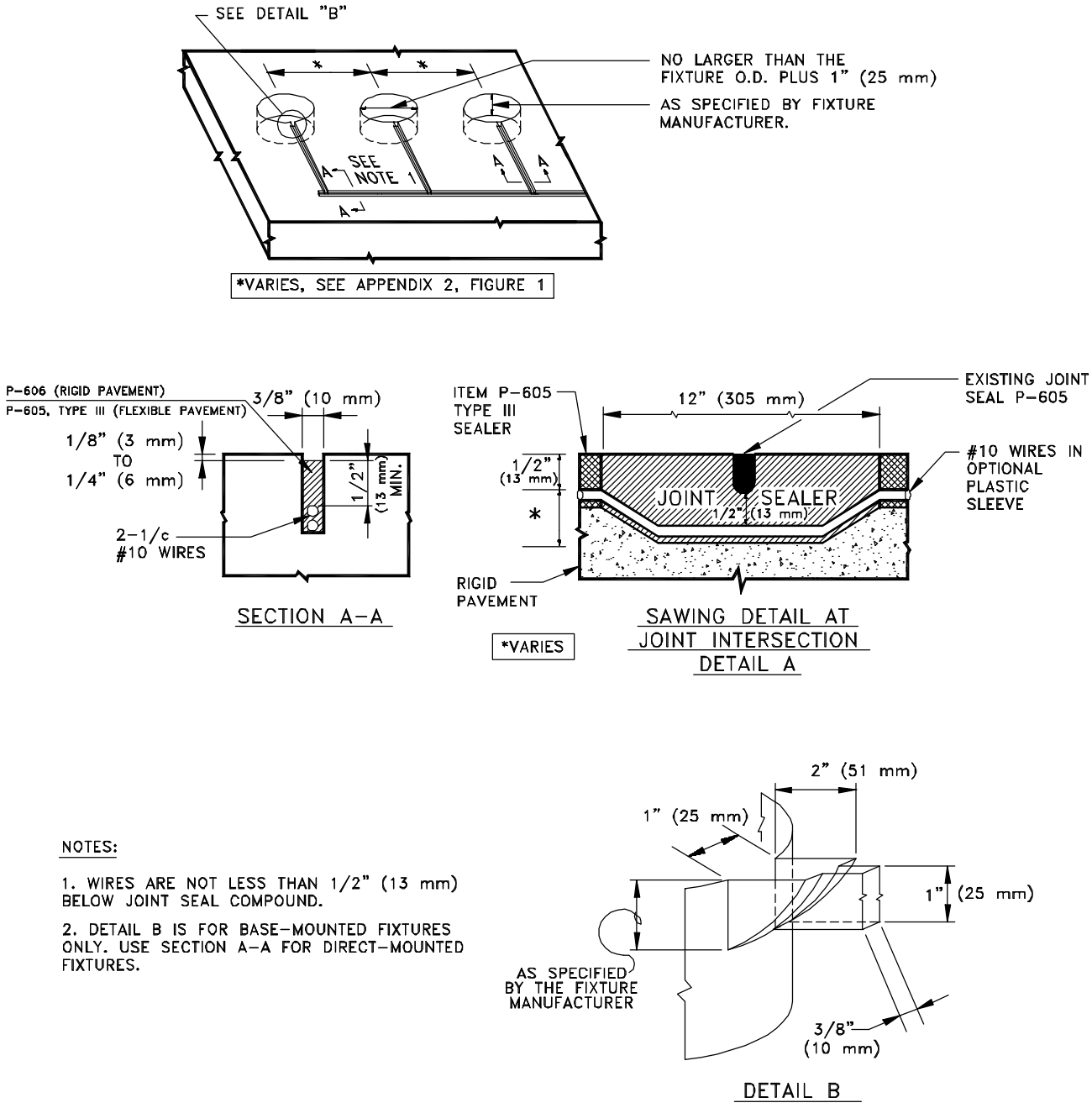

NOTES:

1. WIRES ARE NOT LESS THAN 1/2" (13 mm) BELOW JOINT SEAL COMPOUND.

2. DETAIL B IS FOR BASE-MOUNTED FIXTURES ONLY. USE SECTION A-A FOR DIRECT-MOUNTED FIXTURES.

FIGURE 6. SAWING AND DRILLING DETAILS FOR IN-PAVEMENT LAND AND HOLD SHORT LIGHTS

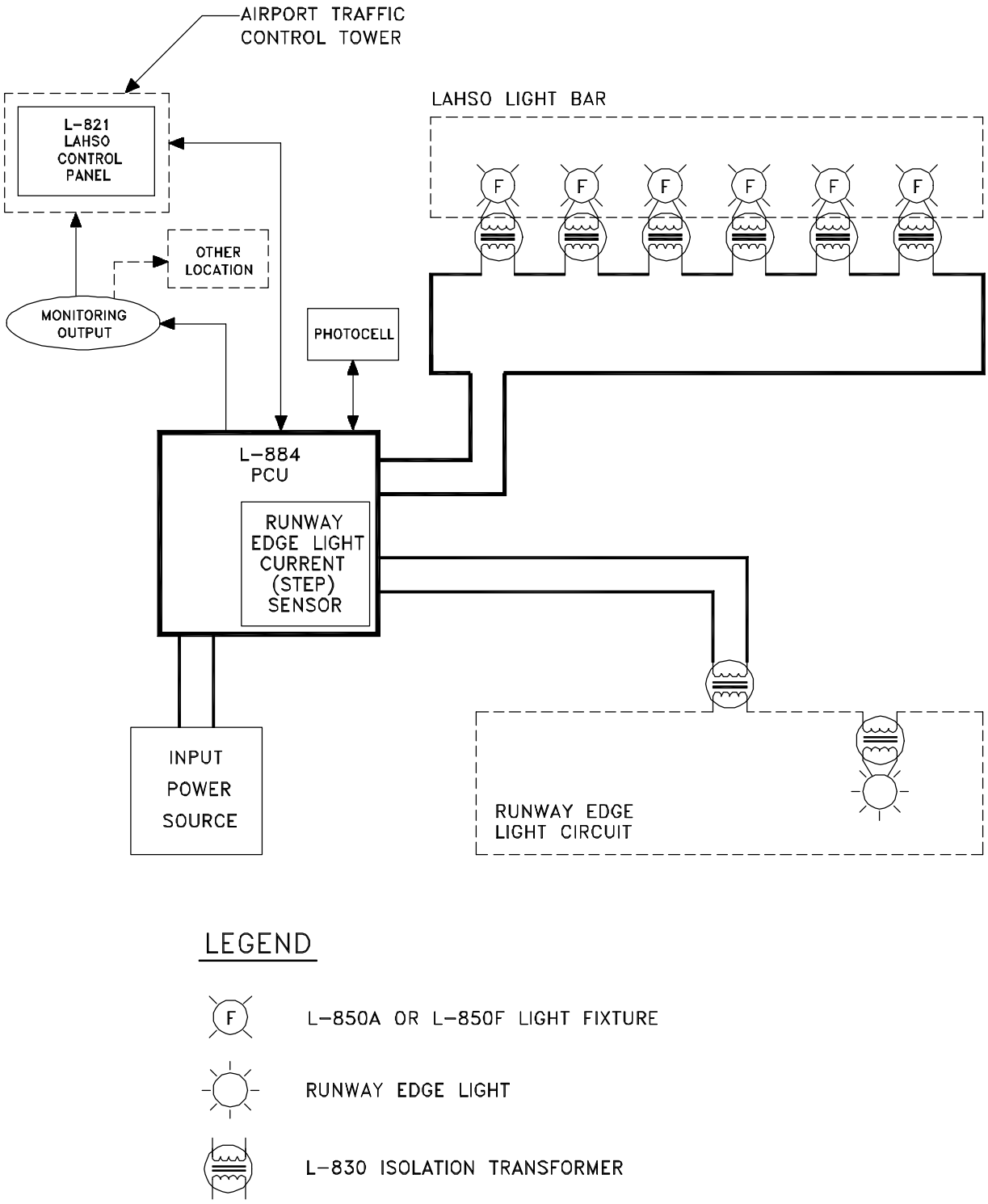

FIGURE 7. TYPICAL BLOCK DIAGRAM FOR LAND AND HOLD SHORT LIGHTING SYSTEM

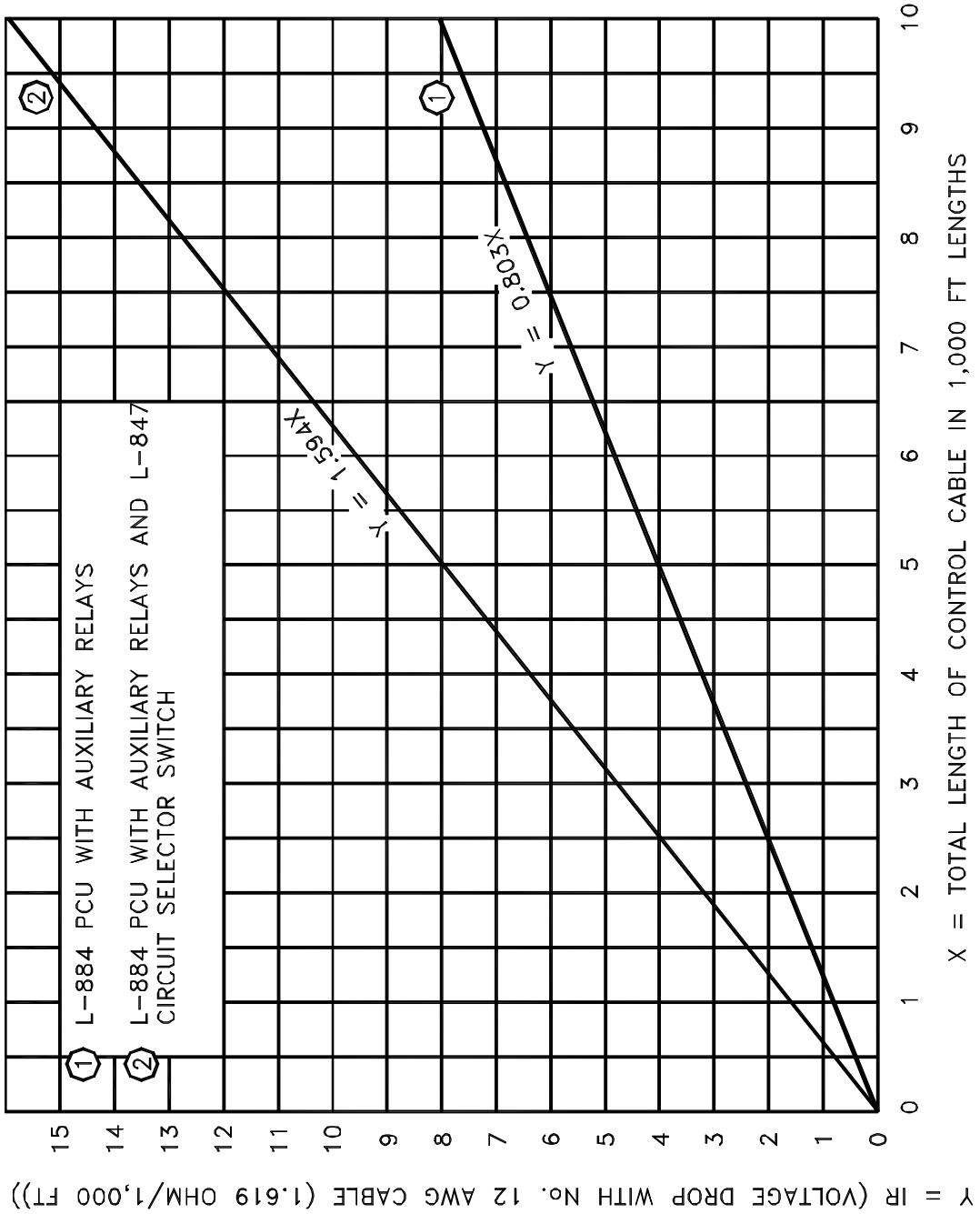

FIGURE 8. CURVE FOR DETERMINING MAXIMUM SEPARATION BETWEEN VAULT AND CONTROL PANEL WITH 120-VOLT AC CONTROL

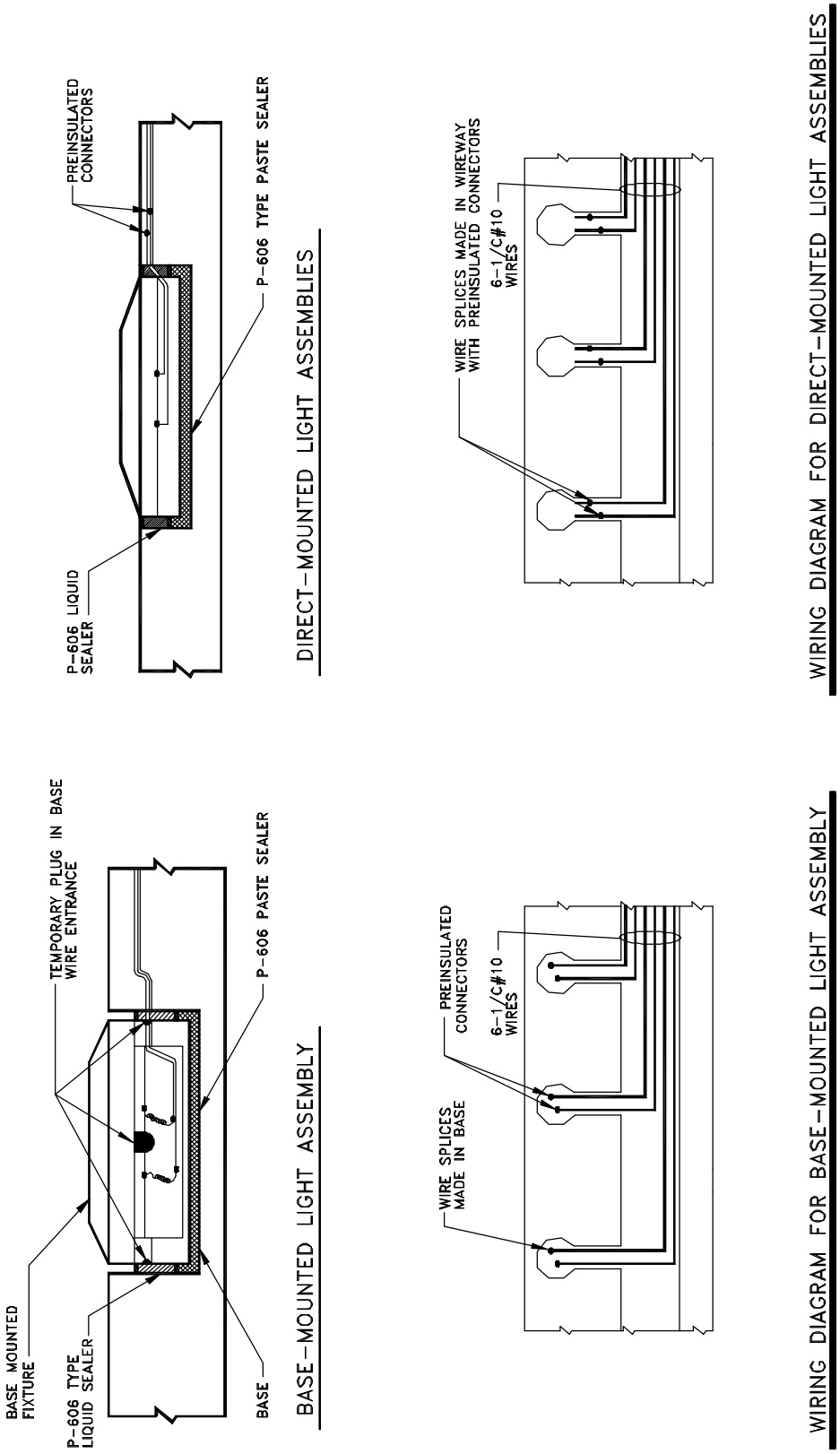

FIGURE 9. WIRING DETAILS FOR DIRECT- AND BASE-MOUNTED LAND AND HOLD SHORT LIGHTS

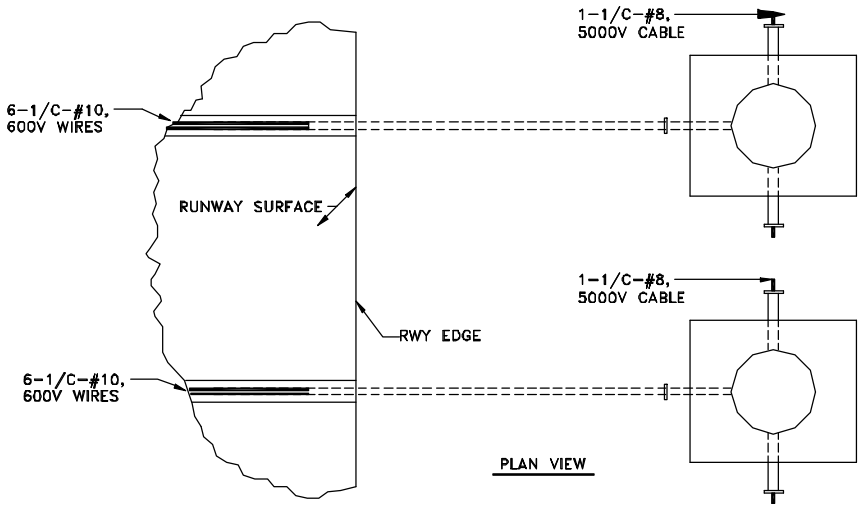

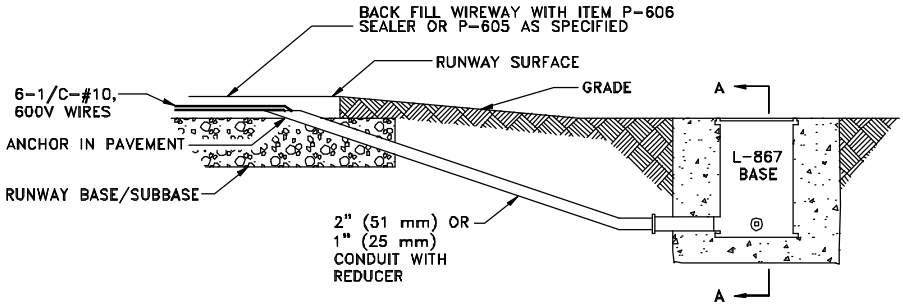

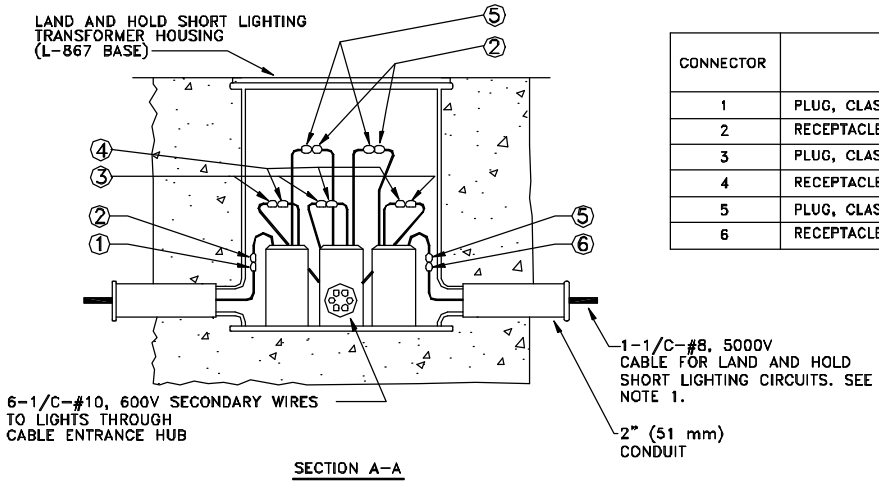

CONNECTOR	L-823 CONNECTORS SEE AC 150/5345-26
1	PLUG, CLASS B, TYPE I, STYLE 3
2	RECEPTACLE, CLASS A, TYPE I, STYLE 9
3	PLUG, CLASS B, TYPE II, STYLE 4
4	RECEPTACLE, CLASS A, TYPE II, STYLE 8
5	PLUG, CLASS A, TYPE I, STYLE 2
6	RECEPTACLE, CLASS B, TYPE I, STYLE 10

NOTES:

1. THE PRIMARY CABLES ARE INSTALLED IN ACCORDANCE WITH ITEM L-108 OF AC 150/5370-10.
2. THE L-867 TRANSFORMER HOUSINGS ARE INSTALLED IN ACCORDANCE WITH PARAGRAPH 8E.

FIGURE 10. TYPICAL TRANSFORMER HOUSING AND CONDUIT INSTALLATION DETAILS WHERE ISOLATION TRANSFORMERS ARE INSTALLED AT RUNWAY EDGE

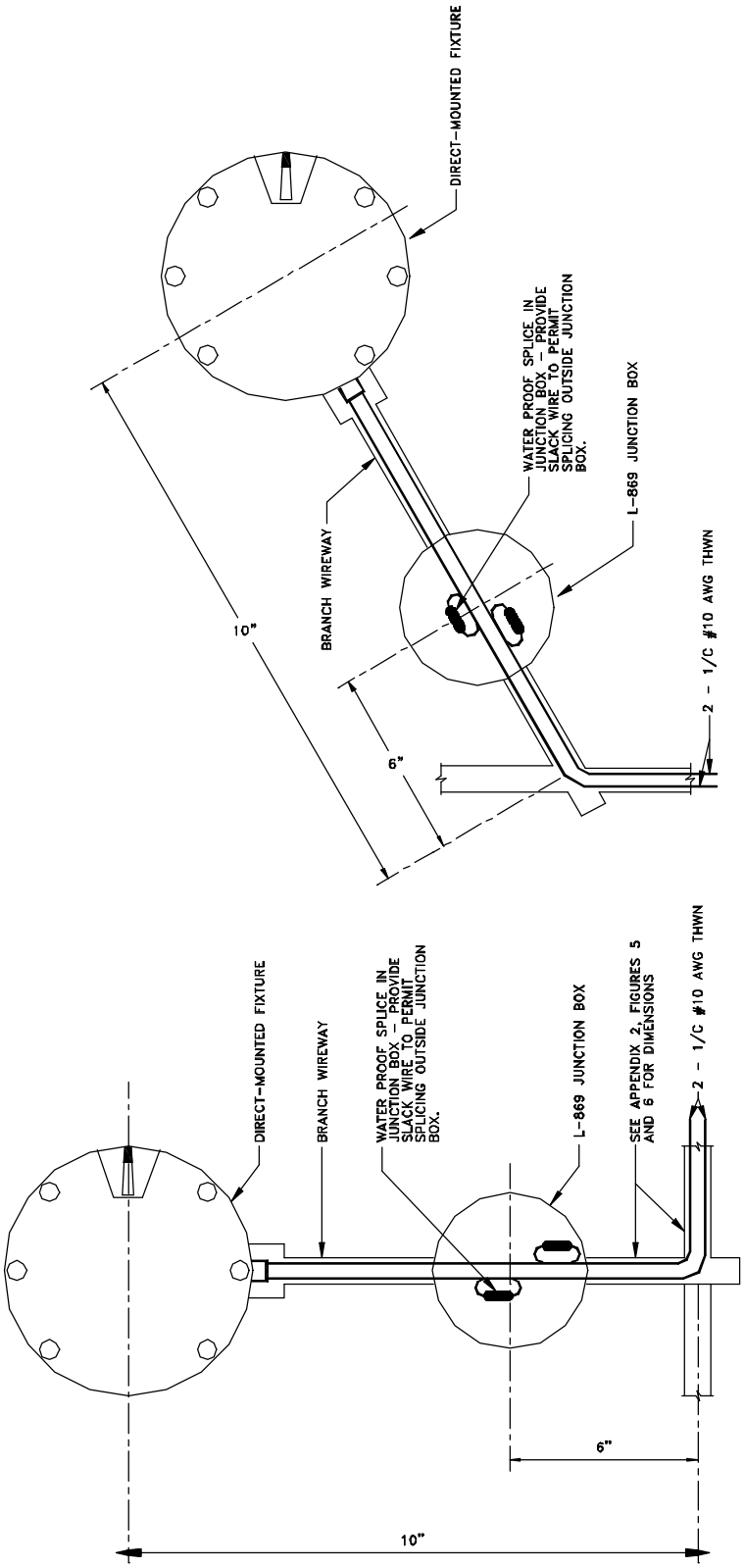

NOTES :

1. EITHER CONFIGURATION MAY BE USED, AS REQUIRED BY THE MANUFACTURER.
2. PROVIDE METAL TO METAL CONTACT BETWEEN THE TOP COVER AND THE BASE OF THE JUNCTION BOX.
3. FILL JUNCTION BOX WITH A COMMERCIAL NON-SETTING MATERIAL. THIS MATERIAL IS USED TO PREVENT WATER FROM COLLECTING IN THE JUNCTION BOX.
4. PROVIDE A SUITABLE GASKET AND GROMMETS TO CONTAIN NON-SETTING MATERIAL IN JUNCTION BOX.
5. INSTALL THE JUNCTION BOX LEVEL WITH THE SURROUNDING PAVEMENT.

FIGURE 11. JUNCTION BOX FOR DIRECT-MOUNTED FIXTURE INSTALLATIONS

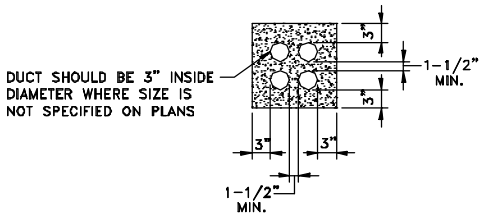

(A) TYPICAL 4-WAY DUCT DETAIL

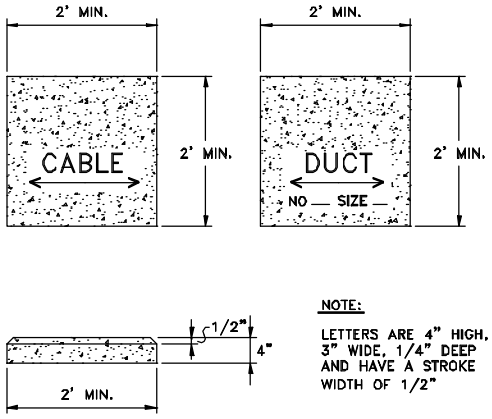

(B) TYPICAL CABLE AND DUCT MARKER DETAIL

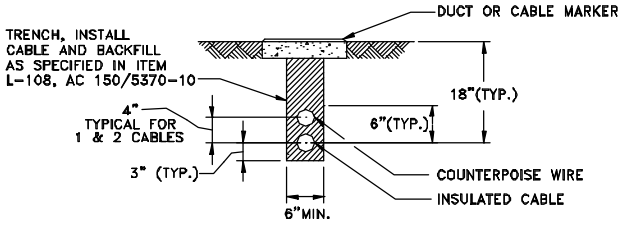

(C) TYPICAL TRENCH DETAIL AND WIRE PLACEMENT

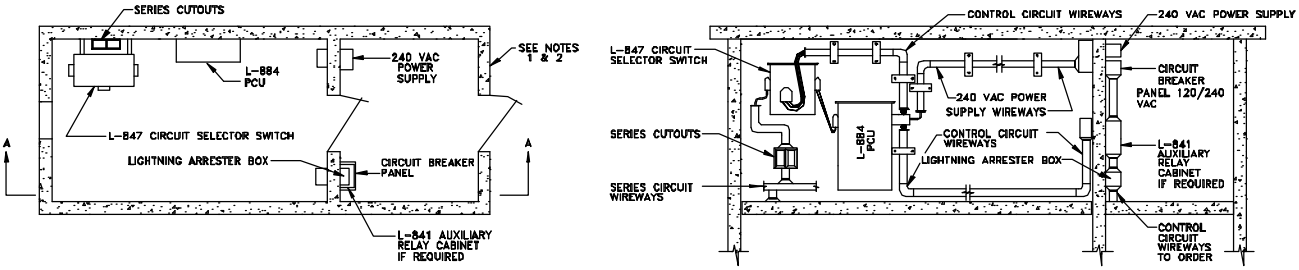

(D) TYPICAL VAULT LAYOUT FOR TAXIWAY LIGHTING EQUIPMENT

NOTES:

1. VAULT CONSTRUCTION AND EQUIPMENT INSTALLATION ARE IN ACCORDANCE WITH THE NATIONAL CODE, LOCAL CODES, ITEM L-109 OF AC 150/5370-10.
2. AN ADEQUATE NUMBER OF LIGHTING FIXTURES AND ELECTRICAL OUTLETS SHOULD BE PROVIDED IN THE VAULT.
3. THE UNDERGROUND ELECTRICAL DUCTS AND DUCT MARKERS ARE SPECIFIED IN PLANS. THE INSTALLATION OF DUCTS AND MARKERS ARE IN ACCORDANCE WITH ITEM L-110 OF FAA AC 150/5370-10.
4. THE METRIC EQUIVALENT (IN mm) MAY BE FOUND BY MULTIPLYING INCHES BY 25.4.

FIGURE 12. TYPICAL VAULT, FIXTURE DUCT, TRENCHING, AND DUCT AND CABLE MARKING DETAILS