DEVELOPMENT OF PROCESS TO IMPROVE WORK DOCUMENTATION OF REPAIR STATIONS

C. G. Drury, C. Wenner and K. Kritkausky

State University of New York at Buffalo

Department of Industrial Engineering

Buffalo, NY 14260

Jean Watson
Office of Aviation Medicine
Federal Aviation Administration

1.1 EXECUTIVE SUMMARY

The loss of ValuJet 592 in 1996 has led the National Transportation Safety Board (NTSB)to recommend to the Federal Aviation Administration (FAA) that the impact of increased use of outsourced maintenance be examined. Third party repair stations, operating under FAR Part 145, may have unique sources of error, and particular human factors issues associated with them. This project examined the human factors issues in repair stations operations, with particular emphasis on documentation issues.

Six repair stations, five in the USA, were visited to develop a model of repair station operations, to examine how human error/human factors are handled, and to determine the impact of the unique documentation difficulties which repair stations face.

The model of operations (Figures 1a and 1b) shows that there are many more potential interactions in outsourced repair than in-house repair. A repair station must interface with each customer airline at many levels. They must also interact with their local regulatory authority, FAA Flight Standards District Office (FSDO) and occasionally with the FSDO at the customer airline. These interactions lead to some unique features of repair station operations, discussed in this report under four headings

1. The Repair Station Environment

2. Quality Systems, Feedback and Errors

3. Labor Turnover and Training

4. Multiple Documentation Formats

Human errors are typically addressed in a rather traditional manner at repair stations. They are detected by the usual QA mechanisms, but then often resolved by action against the individual involved, with some additional modification of procedures. Technical knowledge of human factors is low at many repair stations, although most are eager for more knowledge and data in this specialty.

One repair station maintained an extensive human error database, modeled on Boeing's Maintenance Error Decision Aid (MEDA), as part of an enthusiastic human factors program. We were able to use this database for statistical analysis that allowed us to relate specific interactions to specific outcomes. For example, the error class "Improper Installation/Repair" was significantly associated with the causal factor "Information," showing that changing the information environment would have a beneficial effect on this error class. In this way, each causal factor was related to specific error classes, or was found to be more universal in its applicability, e.g. communications. Both repair stations and airlines can benefit from such analyses of their error databases to focus their intervention efforts where they are most effective. A specific finding of our analysis was that the causal factor "Information" was cited in almost half of the errors, suggesting that documentation was indeed a problem at repair stations. Data collected at the repair stations showed that many had to deal with multiple customers, forcing AMTs to switch between different styles of workcards and non-routine repair reports.

To test how changes in document design impacted repair station AMTs, a comprehension study was conducted. Two versions of each of two workcards were collected from those available at one repair station. In addition, a new version of each was prepared using our Documentation Design Aid, which was based on human factors best practices in document design. We tested each of 54 AMTs on one version of each workcard, so that we could measure whether changing between formats caused more errors than staying with one format. Also, the AMTs were chosen from a repair station and a major airline to determine whether repair station AMTs had a unique ability to move between formats. Each test measured comprehension by asking the AMT to answer ten questions about each workcard. We later classified the answers as correct, incomplete or incorrect.

The comprehension test showed a very significant effect of document design, with the error rate for the Documentation Design Aid workcards being much smaller than for either of the other workcards. There were no effects of either repair station vs. airline, or of whether a document was followed by another of the same or a different design. Clearly, following human factors good practice in document design can have a large beneficial effect on errors of comprehension.

The study's conclusions were that repair stations do indeed face unique problems, but there is no evidence that error rates are higher as a result. More human factors input into repair stations is needed, and can be readily adapted from existing human factors tools developed by and for airlines. Moves toward improved document design, for example using the DDA, will be of particular benefit to repair stations, but will also help reduce human errors for their airline customers.

This report also includes appendices with extensive good and unacceptable examples of workcards. These good examples are products of a continuous research and development program conducted by the authors.

2.1 INTRODUCTION

Repair stations may have unique human factors issues separate from those already documented at major air carriers. This project examined human errors at repair stations, with particular emphasis on documentation problems. Site visits to a number of repair stations were augmented by an analysis of repair station errors, and a comprehension study of documents used in repair stations. A number of issues were raised and recommendations made in the areas of improved documentation design, the difficulties of switching between document formats, how errors are analyzed at repair stations, and problems of high turnover with its associated training costs. The conclusion was that much needed to be done to improve documentation, but that the same tools used in major airlines are readily adaptable to these needs.

3.1 NEED AND OBJECTIVES

In recent years, the public and regulators has expressed concern regarding the effectiveness of repair stations. The recent ValuJet Flight 592 accident brought recommendations from the National Transportation Safety Board (NTSB)1 as well as the United States General Accounting Office (GAO) report to Congress for improved oversight of repair stations. This research evaluates the unique documentation needs of repair stations to recommend safe and cost-effective improvements, and to provide evaluation guidelines for regulatory oversight of inspectors.

This task clearly cannot be performed in isolation: the work of R. Goldsby on "Improving Operations and Oversight of Contract Maintenance" for the Federal Aviation Administration, Office of Aviation Medicine, Aviation Research and Special Projects, Maintenance and Inspection, Human Factors Research Program, is closely related. For example, the issues of documentation design are only a single example of the errors possible in an airline/repair station/regulator environment. Thus, the specific study of documentation must be defined in the overall context of how repair stations operate, and what errors are possible at repair stations.

The specific objective of this project was to assess human errors / human factors issues in the third party repair process, with special attention to documentation issues.

4.1 OUTSOURCING, ERRORS AND INFORMATION DESIGN

There are a number of separate background issues that must be brought together in this project. First is the issue of the repair station environment, which may complicate the maintenance process in some ways. Second is the issue of errors and error control systems, which has always been central to safe maintenance. Finally, the information environment is necessary for both work instructions and job control. The information environment has been shown to have a potential for errors, but to be amenable to relatively straightforward information design solutions. The background on each of these areas will be presented to form the framework for our study.

4.1.1 Outsourcing of Maintenance

Airline deregulation in the 1970s and 1980s has accelerated the movement towards outsourcing maintenance in airline operations under FAR Part 121. When work is utsourced, it may be less expensive initially as the organization that performs the work may not have the same overhead structure, or even wage rates, as the airline. However, this economic benefit is not without some safety concerns.2

In other industries, the outsourcing balance between the initial savings and future loss of control is being debated in the business community. This has occurred in manufacturing,3 in the oil industry4 and even in public libraries.5 Knott (1996),4 for example, notes problems with obtaining sufficient training with the new "nomadic" workforce. Charles Humphrey maintains that in a high-technology industry (photo products), the company must not only "manage the individual alliances, but it must oversee relationships between its outsourcing partners...".6

Introducing any interface between those who perform the maintenance and those who operate the aircraft must introduce an error potential which is absent from in-house operations. Whether that potential is significant, or whether such mechanisms as written contracts or on-site quality audits eliminate this potential is currently unknown. When an accident occurs which brings such matters to public attention, it is not clear whether the errors in the accident sequence were typical of airline/third party interaction, or a unique set of circumstances, or could have occurred as easily during in-house maintenance. In performing the current project, we provide a context for analysis of such issues, concentrating particularly on documentation-related errors.

As an overall framework for this study, we first define the interfaces in the aircraft maintenance process. For in-house maintenance there must be interactions between the airline organization (management, finance, maintenance-personnel, inspectors, quality assurance, etc.) and on the one hand, the aircraft itself and on the other, the regulatory bodies (FAA) primarily through the Certificate Management Office (CMO) and Principal Maintenance Inspector (PMI) charged with responsibility at that airline. When the system is expanded to include a third party repair station, a number of additional interactions are seen. Clearly the repair station organization (similar list to airline organization) must interact with the aircraft itself and the airline. But this repair station must also interact with its own parts of the regulatory system (FAA's Flight Standards District Office (FSDO) Flight Standards District Office and PMI), and with the other airlines that form its customer base. These interactions are shown in Figures 1a and 1b for in-house and third party maintenance.

While Figures 1a and 1b shows the interactions between the various organizations, the interface implications go much deeper. For example, the repair station Aviation Maintenance Technician (AMT) or inspector must deal with not just a single management, but potentially with the management of the repair station and the airline customer who operates the aircraft, as well as potentially with two sites of the FAA regulators. In addition to any role ambiguity arising from these interactions, the AMT or inspector must at times switch between the aircraft of different customers. This entails not just different management personnel, but different workcards, General Maintenance Manuals (GMMs) and Non-Routine Repair (NRR) reports. Again, the potential exists for error, but whether the error rates reflect this potential need to be discovered.

It is also worth noting that outsourcing does not stop with major repair stations, although these are the main focus of this project. Either the airline or the major repair stations may elect to outsource some inspection and maintenance activities, such as NDI or component repair. While it is the FAA's mandate to oversee such "fourth party" operations, they have not been considered further here. Note, however, Humphrey's (1990)6 comment about the final customer (airline in this case) needing to manage the relationships between outsourcing partners in a supply chain of increased length and complexity.

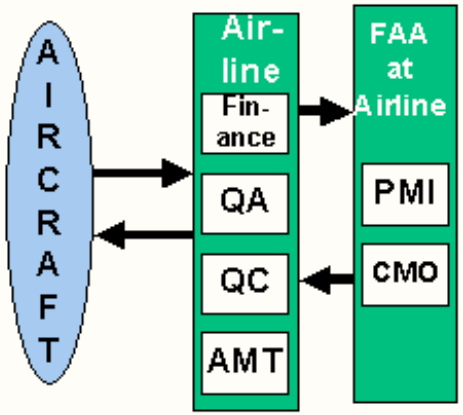

Figure 1a. Interactions between parties in in-house maintenance.
Note: many interactions are between sub-levels

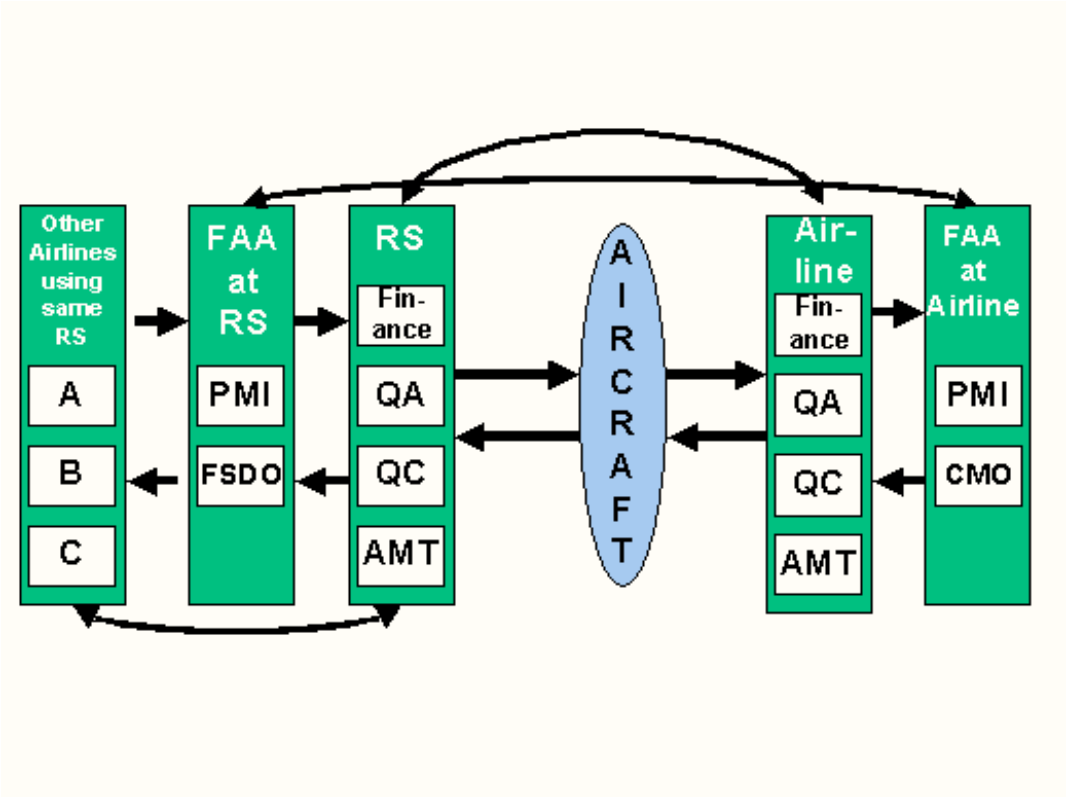

Figure 1b. Interactions between parties in third-party maintenance.
Note: many interactions are between sub-levels.

4.1.2 Maintenance Errors and Their Control

Apart from the errors uncovered during National Transportation Safety Board (NTSB) investigations of repair stations and FAA actions against other repair stations, there is no systematic data on repair station errors. This project is a first step towards controlling human errors in repair stations. For control of any process we need:7

1. A measure of the variable controlled

2. A goal or set point for that variable

3. Feedback of the measure to a person or device to control the variable

A “controller” defined in 3 above should be able to change process inputs so as to produce known effects on the controlled variable. So far none of these exist, except for non-specific goals at the highest level such as the Gore Commission’s call for reducing of the accident rate in commercial aviation. The current project begins this control process by measuring and classifying repair station errors from a single source, providing feedback to the aviation community and showing specific methodologies for error reduction in documentation design.

The technical and scientific basis for the project rests on two specific bodies of knowledge: human error analysis and documentation. Throughout our work with the FAA/AAM we have based much of our human error analysis on the standard authors in this area: Reason (1997)8 and Hollnagel (1997).9 In fact, our earliest paper to Human Factors and Ergonomics Society came directly from this material.10 As an example, we have used Reason’s concepts of Active and Latent failures in our detailed analyses of ground damage incidents during maintenanceIn that research project, we analyzed hundreds of detailed incident investigations to draw event trees relating the observed active failures to the underlying latent failures. Patterns were apparent in both sets, which we used to draw detailed recommendations for intervention. Also, during the FAA/AAM project, we have used similar concepts to classify errors specifically in documentation use, first at an engine repair facility and later in conjunction with Documentation Design Aid (DDA) development.12

4.1.3 Documentation Errors and Design Tools

Human factors in documentation design has a long history, with studies at least back to Wright’s work.13 Wright built on earlier studies of how people read information to provide guidelines for layout of technical documents, such as instructions response forms and tabular data. Much recent work concerns format and layout evaluations and guidelines, e.g. Hartley (1993),14 Haydon (1995),15 and Penman and Sless (1994).16

More fundamental work comes from considerations of document structure and content, back to Haney (1969)17 who performed a comparison of test and tabular formats, or Konz and Dickey (1969)18 who compared text, pictures and auditory presentation. Additional results come from the educational literature, which studies the use of content-enhancing devices such as elaboration (examples, analogies) and embellishments (details) on task learning (e.g. Reder, Charney and Morgan, 1986).19

While there have been many studies of factors affecting human error (e.g. comprehension errors) in documentation design, not all have direct applicability to airline or repair station workcards. Some documents are intended to be read only once (e.g. warning labels), some are intended to be learned and not consulted later (e.g. training material) whereas workcards are used (at least meant to be used) throughout task completion. Other documents of importance, such as the General Maintenance Manual, are used as reference documents rather than job aids. Thus, while it is assumed that similar general principles of human factors are constant (e.g. readable typography, meaningful pagination), it is possible that specific use patterns will dictate different document design requirements at the content and medium level.

Civil aviation is a highly visible industry, with close regulatory oversight. Much of the oversight is exercised through documentation. Documentation ranges from logbook entries, through job control cards (workcards) and non-routine repair reports, to an airline’s general maintenance manual. In this environment, documentation has three roles:

1. Definition/instruction for procedures

2. Work control/production control

3. Quality assurance/regulatory oversight

Different organizational groups place emphasis on each role, but all roles must be fulfilled without error for the system to work safely and efficiently. In two recent National Aeronautics and Space Administration studies of Aviation Safety Reporting System reports of maintenance errors, Kanki and Walter (1997)20 found 60% of 83 incidents from 1986-92 to be procedure related, and also 45% of 207 incidents from 1996-97. Documentation is both vital to airline safety and error-prevention.

Since 1990, the FAA/AAM research program has performed a series of studies to improve documentation design. Data collected at a number of airlines showed both user dissatisfaction with current documents, and the fact that workcards in particular failed to meet the standards of human factors good practice.21 A parallel effort22 showed how users could redesign documents, in this case an aircraft maintenance log, to better meet their needs.

To address the needs of the aircraft maintenance industry, a series of quantitative studies were undertaken to apply published human factors data to workcard design. Patel, et al (1994)21 developed a set of guidelines and used them to produce A-check and C-check workcards which were evaluated as significantly better by inspectors and mechanics. Next, these guidelines were expanded to cover computer-based workcards.23 A computer-based demonstration system for eight workcards covering A-checks and C-checks was again evaluated by users as a significant improvement. The restricted language called Simplified English was tested for use in workcards by Chervak, Drury and Ouelette (1996),24 and found to reduce comprehension errors, particularly for complex workcards and non-native English speakers. An improved job aid for over-practiced, repetitive tasks, such as overnight checks, was developed and tested at an airline partner,25 and again evaluated to be an improvement.

In 1996-98, the accumulated research data and experience on better documentation design was packaged for document producers in a computer-based Documentation Design Aid (DDA). This provides best practice standards for all aspects of document writing and layout, including a Simplified English utility presented as a spell checker. This DDA was produced with an airline partner and tested for usability using the airline's engineers who produce workcards. Data collected by Drury and Sarac (1998)26 showed how the system is effective in changing different aspects of workcards. In 1998, an evaluation of the DDA was conducted using a comprehension test and counts of paperwork errors made in actual operations. The DDA designed documents had about half of the comprehension errors seen in the original workcards. There was no significant difference in operational errors at the time of reporting.12

A final example will show the importance of paperwork errors and the effectiveness of control mechanisms. Drury (1998)7 was invited to analyze the errors which arose during a fleet inspection using a rapidly-developed and deployed directive workcard on a large airline fleet. The workcard required 9 responses by the AMT, of which 1.5% were found to be in error when the tasks were completed. This meant that 20.5% of the workcards contained at least one error, clearly an unacceptable error rate. When the instructions and responses were compared to paperwork guidelines,21 each could be categorized as meeting or not meeting the guidelines. It was found that all of the errors occurred on responses where the guidelines were not met. Responses that met the guidelines were error-free. This study showed in the clearest terms that poor error performance arises from poorly designed documents. Well-designed documents prevent errors, even when they are used under less-than-ideal conditions, such as time stress.

In summary, error-free documentation is vital to aviation safety, documents are often error-prone, and we have techniques that are proven to reduce documentation errors. The challenge of the current project was to apply this knowledge to the unique environment of third-party repair.

5.1 METHODOLOGY

The research team had previous exposure to repair stations and their errors. For example, a project at a repair station in Asia in 1996 had found documentation deficiencies when using the FAA/AAM Ergonomics Audit Program (ERNAP). A direct relationship to error causation came from Event Tree analysis of customer-discovered errors, of which a large fraction had paperwork design deficiencies as one of the causal factors. From this experience, and the interaction framework given in Figure 1a and 1b, the requirements for the methodology were defined as addressing:

1. How repair stations operate in conjunction with airlines and regulators.

2. How this interaction provides opportunities for error.

3. What errors have been found, and what are their root causes.

4. What is the role of documentation design in these errors? Are good human factors standards being followed?

5. How well do AMTs at repair stations cope with unique challenges such as switching between the documentation designs of different airline customers?

To address these points, a methodology was developed consisting of several parts. The first part consisted of site visits to six repair stations, differing in location, size and customer base. Two were in the western USA, three in the southeastern USA, and one was in Asia (but not the same country referenced above). Subsequent parts consisted of a detailed analysis of an error database at one repair station, and a document comprehension study conducted at a repair station and the maintenance site of a Part 121 carrier.

5.1.1 Site Visits

Most sites were visited in conjunction with the investigator on another FAA/AAM project, Ray Goldsby, so that each project benefited from the data collected for the other. Mr. Goldsby's task was to report on FAA/Part 145 interactions. For all sites each visit consisted of meetings with the management and quality personnel, and with AMTs/inspectors performing their tasks in the hangars. In conjunction with all visits except the foreign repair station, a parallel visit was made to the local Flight Standards District Office (FSDO) to obtain a regulatory perspective in addition to the repair station perspective. These FAA interactions are summarized in Ray Goldsby's report, and omitted here unless they specifically addressed errors. For one site, an additional visit was made to an airline that had outsourced almost all of its maintenance to a repair station.

At each repair station data was collected on the general operating environment and philosophy, how errors were detected, investigated, recorded, analyzed and followed up, and how documentation systems impacted the AMTs and inspectors. At the same time, any interesting or unique good practices for reducing errors were noted. Where error investigations existed, examples were collected to determine how error data was obtained and used. This also gave a general insight into the current status of human factors activities in the repair station.

5.1.2 Error and Paperwork Analysis

Two more specific studies were undertaken to quantify a number of the error issues arising from the site visits. At one repair station, an extensive database had been accumulated using a Maintenance Error Decision Aid (MEDA) system. While this had been most effective in tracking solutions to specific errors, we performed additional analyses aimed at a better understanding of the causal mechanisms involved in the errors. This analysis is intended as a model for taking error analysis beyond resolving individual errors, and beyond one-dimensional compilation of error statistics. The second study was a document comprehension experiment to quantify whether changing between document formats (typical for AMTs at repair stations) would increase the error rate, and whether a repair station would be more capable of such task-switching than a Part 121 carrier.

Detailed methodologies for each of these studies are given in the appropriate sections (7.1 and 8.1, respectively) so as to be more closely associated with the study results.

6.1 GENERAL FINDINGS

At the start of Section 5.1, a number of requirements that had to be addressed were listed and used as the basis for the methodology. These requirements are also used to structure the findings. First, we show how repair stations operate to provide evidence for some unique pressures on the repair stations and their AMTs. Next, we examine how quality feedback systems operate, as these are the source for error analysis and re-mediation. Finally, we take two issues which are important and which interact: the problem of labor turnover and the problem of multiple documentation formats. In each of these sections, we show how coping strategies (e.g. training) are used to help resolve potential problems.

6.1.1 The Repair Station Environment

A repair station must be profitable to survive in the long term, and hence must satisfy customer needs within the regulatory environment. With the increase in outsourcing by air carriers, the customer base and workload have increased, but so has the competition between repair stations for this work. Many repair stations become specialists in one particular aircraft type (e.g. DC-8, B-747) while others find niches in conversions (e.g. B-727 cargo conversions), but some take on a variety of (usually heavy) maintenance tasks.

This variety is illustrated by the current customer and aircraft type base of three facilities visited:

RS1: 5 customers / 1 aircraft type

RS2: 3 customers / 3 aircraft type

RS3: 11 customers / 7 aircraft type

These count only currently-active customers, and aggregate across aircraft series (e.g. B-727 series 100 and 200), but give an appreciation for the variety involved. This has a great impact on work methods because each combination of aircraft type and customer can have its own unique set of documentation, and each customer has its own General Maintenance Manual that governs all procedures to be followed. We saw over 20 current GMMs at one repair station. In contrast, an air carrier will have a single GMM, and at any one site perhaps a smaller number of aircraft types. Also note that the variety of aircraft types makes it more difficult to stock parts and special tooling at repair stations. In particular, the type-specific maintenance scaffolding systems popular with air carriers are more rarely seen at repair stations. From a human factors viewpoint, this can make physical access more difficult, adding to the increased cognitive load from aircraft and customer variety.

Four additional issues which impact quality and human error in repair station maintenance have their origins in the competitive environment of aviation maintenance.

1. If the oversight at one particular FSDO is particularly stringent, this can lead to a short term loss of business by the repair stations in that region as airlines move to minimize contract costs. Some airlines have more concern for long-term quality issues, and may return if quality is indeed higher in these regions.

2. Fixed price contracts between airlines and repair stations may set financial limits on repair actions. These fixed caps can influence the repair station inspectors' reporting thresholds. One airline had, for example, a threshold of 20 hours for performing NRR work, beyond which negotiation was required. This meant that inspectors at times wrote multiple NRRs to keep each below the threshold.

3. Do airlines which out-source all of their maintenance really retain the resources for engineering, workcard design, quality assurance, GMM writing etc. to maintain safety? Many do, but it is suspected that some airlines take these responsibilities less seriously.

4. Repair stations have at times not been profitable in the long term, so that some tend to be short-lived. The same facilities, and even personnel, can resurface in similar roles after a repair station goes out of business.

In order to cope with their unique pressures, repair stations have evolved their own methods of work flow and quality feedback. To reduce the potential for error when using different GMMs and workcards, all repair stations visited attempted to keep teams of AMTs and inspectors dedicated to one customer (one "line" was the usual terminology). This also made economic sense as it avoided unnecessary extra training costs, as all personnel working on one customer's aircraft must receive training on that specific GMM. However, work pressures could often disrupt this strategy. If one aircraft gets behind in its schedule, then assigning more personnel may be the only answer to ensure on-time performance, despite the added costs and error potential. A number of repair stations visited overcome part of this difficulty by keeping at least inspectors and leads dedicated to one customer. This has the additional advantage of allowing the inspector (or lead) to build a good working relationship with the customer. However, AMT movement between lines was still present.

6.1.2 Quality Systems, Feedback and Errors

Errors, particularly human errors, have a long history of detection and control in maintenance, usually under a heading such as "Quality Assurance" (QA). Errors will occur: the system response is both to reduce the incidence of errors and to prevent them propagating through the system to become incidents, or even accidents. The places where errors can be detected are somewhat different between repair stations and airlines, as shown in Table 1. Each of these detection points can be used as part of a feedback system to control errors (see Section 4.1.2). In a Part 121 carrier the operational errors are collected in reliability measures, e.g. for 7-day, 30-day or 90-day periods following maintenance. These same measures also provide feedback to repair stations. Thus, the repair stations have additional error detection and feedback sources in place because they not only duplicate those of their airline customers, but add their own.

Table 1. Error detection at airlines and repair stations

Airline	Repair Station
By AMT during task	**By AMT during task**
By Inspection (QC) after task	**By Inspection (QC) after task**
By QA via paperwork audit	**By QA via paperwork audit**
	By airline inspectors performing QA for airline
By airline operations, from event failure of computer system	**By airline operations, from event failure of computer system**
	By FAA oversight of paperwork or task audit at repair station
By FAA oversight of airline paperwork and operations	**By FAA oversight of airline paperwork and operations**

In the repair stations visited, most regular QA error detection was via paperwork audit. Similarly, the FAA FSDO associated with the repair station audits the paperwork perhaps more than the work itself. In addition, both the repair station and the FAA start from the paperwork trail in investigating any error. One repair station performed these audits of the paperwork:

1. By Production Control

2. By QA inspectors

3. By Records personnel.

In all cases, auditing was in comparison to the operations manual to ensure compliance. Again, this emphasizes the importance of documentation to the process for ensuring public safety. Error investigation at all sites visited, except the one with the MEDA-derived system, had a rather traditional view of error. They tended to see error, particularly human error, as a matter of either lack of knowledge or deliberate flouting of procedures by the individual (usually AMT) most closely involved with the error. Thus, root causes were seen as an inadequate procedure, inadequate motivation or inadequate training. The knowledge of human factors data and techniques was quite low among QA and management, although many had heard of the term and were interested in receiving more detail, self-help aids or training in human factors. One of the sites was trying to implement MEDA, but was having difficulties in getting supervisors to collect data, and was somewhat vague about how to use MEDA data once collected.

Errors recorded at QA were not the only source of feedback to the repair stations. Most of them closely monitored the customer's reliability data. Some noted, however, that they had to be careful not to take blame for events unrelated to the maintenance work performed. One repair station had a team meeting of supervisors and leads as each aircraft was returned to the customer. This meeting addressed errors and lessons learned from the visit, and produced a written statement of required changes for management to act upon.

Feedback to repair stations can also come from other interactions with the customer airline. Many customers maintain an on-site representative charged with overseeing quality. Unfortunately, there were instances where this representative also served as a conduit for the customer's dissatisfaction with cost or delivery schedule. These representatives were then seen in the repair station as overseeing cost or parts availability or schedule compliance in addition to, or even in place of, quality compliance. There were occasional complaints that the airline representatives were relatively untrained, or even were contract employees, again calling into question their role in maintaining quality. Note also that feedback from the customers to the repair station on topics such as what has to be repaired/reported and time/cost of repairs can reach the AMT or inspector in the hangar and may, despite management effort, affect quality performance.

One final aspect of feedback occurs when errors or ambiguities are found in the workcards supplied by the airline. This is handled within the airline maintenance environment by formal change procedures, but the repair station must go to the airline for any changes. If an error is discovered at the repair station, definite guidance is needed from the airline. Whereas at an airline maintenance site, an AMT may recognize the problem and "work around" it until the paperwork is fixed, a repair station is in something of a dilemma. Even if the fix is "obvious" to the "experienced" AMT, it would be quite dangerous to attempt to work around the error. But AMTs usually wish to help the customer, and may be tempted to do what they thought the intent was, rather than following the wording exactly. Again, it is the same situation faced by the in-house AMT, but any solution may take longer for the repair station AMT. We noted at the repair stations visited that the AMTs and management seemed to find the airline quite responsive to making changes to workcards. As in-house AMTs often complain about the glacial pace of change in their own workcards, it could be that changes initiated by repair stations actually receive more rapid resolution because the dangers are more obvious.

6.1.3 Labor Turnover and Training

A combination of national and local factors make labor turnover a potential problem for the airline industry in general. In addition there are factors making it especially difficult to recruit or retain a skilled and well-prepared workforce at repair stations.

1. There is a general and well-documented shortage of AMT across the USA, but because of wage differentials and other employment factors, repair stations are affected more than Part 121 air carriers.

2. Personnel coming into the aviation maintenance workforce may not be aviation enthusiasts any longer. These can include direct entry personnel for specific tasks and non-aviation related managers. One reason for lack of aviation enthusiasm is that aviation maintenance is no longer perceived as a technologically-leading industry, with few computers used for example.

3. When Part 121 carriers suddenly downsize their maintenance operations, the knowledge base is often lost to the industry. Many of those who lost their jobs consider opportunities outside aviation, not just alternates such as repair stations.

4. The AMT workforce in repair stations has been characterized as "migratory", i.e. willing to move jobs for small changes in pay / conditions. In particular, there is a tendency for AMTs to move to major and regional airlines where pay is higher and benefits are better.

5. AMTs at repair stations make about $15-20 per hour at the sites we visited, which can be considerably less than they can make outside aviation in the same communities. This leads to poor retention in the aviation field.

6. Many AMTs at repair stations are contract workers, rather than permanent employees. They must still be trained in all the airline and repair station procedures, but there is economic pressure to minimize training for temporary personnel. Training can be limited to short "vestibule" training in repair station procedures and short training on specific airline procedures and paperwork as required to start work.

7. These factors lead to high levels of turnover in AMTs and inspection personnel, with rates of 30-50% per year reported. Maintaining a skilled and knowledgeable workforce under these circumstances can be difficult.

8. There are high levels of turnover among management as well as hanger-floor personnel. Reported levels can exceed 100% per year. Some are not familiar with the Part 145 environment, or even the FARs themselves and how they govern repair station / airline / regulator interactions.

9. Turnover is also apparent among FAA oversight personnel. This can lead to lack of deep knowledge, causing individual differences between auditors. To some extent this can be alleviated by the audit tools available (e.g. OASIS) which make it easier for all inspectors to access the same data and regulation base.

Repair stations have found a number of ways to meet the challenges implied in this list. Because repair stations are in a highly competitive market, raising wages to a level that will retain local AMTs may result in reduced competitiveness. The impact of competition from foreign repair stations, that may have quite different wage rates, is beginning to be felt. Thus, merely raising wages may not be a feasible solution to turnover. In the socio-technical systems literature, turnover is seen as a symptom of job dissatisfaction that goes beyond wages. People make work choices for many other reasons, including working conditions, co-worker and management support, and pride in task accomplishment. The latter has traditionally been strong among AMTs, but working conditions can include unwanted night work and overtime, and lack of group or managerial cohesiveness as repair stations must move personnel between lines to respond to changing demand. Cohesive groups are also harder to form when there are many temporary (contract) personnel.

Responses by repair stations have been quite varied. Some limit the number of contract personnel (e.g. to less than 20% of the workforce). Some have started their own in-house training programs to give school-leavers the necessary skills in specialties such as sheet metal repair. All rely heavily on training. This is typically a few days of general training on repair station procedures followed (for AMTs) by courses for each aircraft type and customer. At times, airline customers perform their own training, for example on their GMM, or on Required Inspection Items (RII). Many repair stations have their own instructors and classrooms. Quality of training can vary from silent reading of the customer's GMM to the employment of more modern training delivery and evaluation procedures.

One area where there was agreement was that any standardization of procedures and paperwork across airlines would be of great benefit to repair stations. It would reduce their training costs, and eliminate one potential source of errors.

6.1.4 Multiple Documentation Formats

As has been alluded to throughout, documentation design is one area where human factors techniques apply directly to repair station needs. There are two separate issues which can lead to error:

1. The quality of documents such as workcards is highly variable across the airline industry as a whole, so that poorly-designed documents co-exist with well designed ones.

2. In addition to having to work with some poorly-designed documents, the repair station AMT must (more often or less often) change between quite differently-designed documents.

Repair stations do produce their own documents, for example in response to Airworthiness Directives (ADs) notices or Service Bulletins, and for aircraft modification. They also have their own Non-Routine Repair (NRR) forms when a customer needs them, and of course have their own GMM governing their own procedures. But in most cases, the documentation of the airline customer must be used.

Differences between airline workcards can occur in:

1. Overall package quality supplied. Some even look like pirated packages, complete with part numbers specific to defunct airlines!

2. Package philosophy. Some airlines have workcards with quite a small work content, while others have combined cards over the years to produce items with a single signoff covering many shifts of work. Who can sign off for such workcards? Other air carriers have taken a relatively standard package, e.g. from a manufacturer, and added content to some of the workcards to ease their own scheduling problems.

3. Overall quality. Many workcards appear to have been written by people who have never done the job themselves, leading to poor sequencing of steps. One suspects that many workcards were never adequately verified on-the-job at the customer airline.

4. Level of detail. Some workcards are quite self-contained, with reference material incorporated directly into the workcard package. Others are little more than the instructions to "Accomplish Procedure XXX" from a maintenance manual, which the AMT must then retrieve and integrate into the task.

5. Wording. The same words can mean quite different things to different customers, despite the implied standards such as ATA-100. Within a single airline it is possible to ensure consistency about what, for example, comprises a "general visual" inspection. Between airlines it is far more difficult, especially when some customers are not airlines but domestic (or foreign) military, or large transport aircraft owned by private users.

6. NRR format. A frequent source of errors is the use of multiple NRR formats. All require similar, but not identical, information. Formats differ widely. In principle this problem has a simple solution in a computer package with a uniform input screen which can produce any output subset and format required by a customer. Most repair stations are not yet at this point, and most customers see only their own narrower needs.

Changing between airline customer document packages gives several new opportunities for error. AMTs must read, understand and carry out task instructions despite the above differences. Will an AMT always see the "revision" indicator on a task step when it can occur in different places and formats in different documents? Will AMTs always enter their identification code correctly on NRRs when each NRR may need the addition or deletion of digits to fit an airline customer's own format?

Consistency is required for reliability. When a person must change between different "logics," errors increase. Well-known examples are finding controls in unfamiliar rental cars, or changing rapidly between the numeric keypads of telephones and calculators/computers. While management tries to minimize such changes, they are to some extent inevitable in a highly-competitive business environment.

A final potential problem is that of non-native English speaking AMTs. In the Asian repair station, while the management, supervision and many AMTs spoke fluent English, some AMTs did not. In one domestic repair station, many AMTs had Spanish as their native language. (That caused an additional problem as manufacturers' workcards in Spanish are written assuming the reader is from Spain, and hence speaks Castillian Spanish. The Spanish of the Americas is different enough to have caused difficulties in workcard interpretation.) The issue with foreign language speakers, who may produce high-quality work when a supervisor translates the workcard requirements, is who should be responsible for the signoff? A legal answer exists, but what of the human error implications?

Clearly, enough issues were raised by the site visits in the area of information design to warrant a closer, more quantitative, examination of these issues. Sections 6.1 and 7.1 provide that examination.

7.1 ANALYSIS OF REPAIR STATION ERROR DATA

Although our objective was to consider paperwork errors in repair stations, we know of no repair stations that collect only paperwork error data. Thus, a more complete database of repair station errors was selected for further analysis, partly to see what fraction had paperwork as a causal factor, and partly to demonstrate better ways to extract useful information from already-collected data.

One goal in an airline maintenance environment, as in other industries, is to reduce (and attempt to eliminate) the incidence of human error. However, it is necessary to know what the errors are before they can be reduced and eliminated. Reason (1990)27 has identified that errors are often caused by both active and latent failures in the system. Active failures are those slips, lapses or mistakes caused by personnel in direct contact with the system at the time of the error, while latent failures originate at other points, and at other times, in the organization. The obvious goal is to determine how to prevent these errors from occurring, and then to target both active and latent failures. An error reporting system is one tool that can be used to determine what errors are occurring in the system, and can be used to suggest interventions that may prevent future incidents.

It is important to note the distinctions between an error reporting system and an error investigation system. Generally, the goal of the error reporting system is to record *what* happened, while in an error investigation system, the goal is to identify *why* the incident occurred. In an investigation system, the need to dig deeper into each incident requires that the personnel assigned to investigate incidents be trained to identify latent failures, and to look beyond the obvious to determine the factors which caused the incident. In addition to recording information about particular incidents, error investigation systems also serve a secondary purpose. Such system allows trends, or patterns, in error data to be determined. It may be that there are common latent failures causing errors, irrespective of the active failures. Alternatively, some latent failures may turn out to be strongly associated with particular active failures. Such patterns may suggest possible interventions that may otherwise go unnoticed, or may strengthen the argument for implementing a particular intervention. This investigative approach offers the opportunity to find interventions that may prevent future incidents, rather than acting in a reactionary mode to incidents that have already occurred.

7.1.1 The Error Reporting and Investigation System Used

Our repair station partner had already implemented an error reporting and investigation system based on the MEDA methodology developed earlier by Boeing.28

This system provides a checklist approach to error reporting, in which trained error investigators identify both the active failures (event and maintenance error) and the latent failures (contributing factors) for each incident. There is also space for the investigator to write a short narrative description of the event, and to describe how the contributing factor contributed to the incident. The repair station system is computerized, and an incident investigation can be triggered by an event in the maintenance facility, or through an audit of a particular process or work group. The computerized system also provides a mechanism for recording and tracking interventions, allowing investigators to ensure that all recommended interventions are actually implemented. The repair station's error investigation software allows the data to be analyzed by running summary reports, which tabulate the number of times each response from the checklist was chosen. The narrative descriptions are not included in any of these summary reports. These reports can be generated for all of the incidents, a selected subset of incidents (e.g., aircraft type, airline involved), or for particular evaluators, error types or error categories. This type of information can be used to identify the problems that are occurring frequently in the system, and can be used to monitor simple time trends in the data. At this level it cannot find patterns in the data, only simple time trends.

Another issue to be considered when interpreting the summary reports is that the broad nature of the contributing factors makes it difficult to narrow down specific problems in the maintenance environment. The contributing factors included in the checklist are fairly broad, and a single factor may be selected for a wide range of problems. For example, having too little information can occur when a mechanic fails to refer to the maintenance manual or when the workcard omits important details of a task. Even though these are very different problems, requiring different interventions to fix, they would be reflected the same way in the error analysis summary report. Perhaps the best use of existing data is to focus attention on a whole class of latent failures, such as problems arising from lack of information.

Note that the conclusions from analysis of any error investigation system are only as valid and reliable as the data entered into the system. In any system there is much room for analyst-to-analyst variation in data entry. In any system, the data entered is only as good as the data gathered. If a factor is not investigated, it will not appear in the database, and hence can never appear as a causal factor in the analysis. In addition, even if the factors were investigated, it could be mis-recorded. In a narrative-based system, the wording could be unclear to future analysts. In a classification-based system (such as MEDA) a factor can be mis-classified. As we have noted earlier,[11] there is a direct relationship between quality of data and time spent collecting, recording and classifying the data.

The particular analysis system we used had a number of features that make it uniquely useful in practice such as the ability to enter data from audits where no error or incident was involved. This made the system proactive as well as reactive. Secondly, the system included tracking data so that the remedial actions for each incident could be followed through from initiation to intervention. While these are excellent features, they were not used in our analysis, which focused on methods for finding usable patterns in incident data rather than on remedies for each individual incident.

7.1.2 Analysis Methodology

Our main objective is to determine if alternative analyses of the existing database can be performed, and whether such analyses offer additional insight into suggested interventions to prevent future incidents.

The logic of the methodology was to use statistical analysis rather than unaided human interpretation to find reporting patterns in the data, and to use these patterns to focus interventions where they are most effective. As an overview, we performed the following steps:

1. Enter the data from each incident into a statistical package.

2. Calculate two-way tables relating the type of error to the contributing factors.

3. Use tests of statistical significance to determine whether the two-way tables showed patterns, or just reflected chance distribution of data.

4. For each error, list the significant contributing factors.

5. Summarize the contributing factors across all errors to show where to focus intervention efforts for each error.

We began by entering information about each incident into a spreadsheet, which allows us to use a statistical software package to analyze how various variables are related. After reviewing all of the 395 incidents included in the repair station database, 316 incidents were included in the spreadsheet (the remaining 69 incidents were either duplicate or blank entries). The MEDA number, analyst, error type, maintenance error type, and associated contributing factors were recorded for each incident. The error type reflects the method through which the error was found, while the maintenance error type is the way the error was manifested in the maintenance system. The contributing factors were coded as either 0 or 1, where the 1 indicated that the contributing factor was recorded as being present for that incident.

We chose not to include the event from the MEDA reports in this database. This event represents the outcome after an error was detected, and is often related to when and how the error was detected. For example, events may include delays, cancellations or rework. The assignment of one of these events would be contingent on how close to scheduled departure the aircraft was when the error was detected. The event does not help to distinguish between different error causes.

There were 64 contributing factors included in this database. Since many of the factors were selected only a small number of times, it was necessary to collapse much of the data into broad categories in order to perform statistical analysis on the data. Thus, the analysis was performed for each of the eleven major categories of contributing factors. In addition, there were 92 errors in this database that originated from audits. Each of these incidents did not have contributing factors chosen, and thus were eliminated from this analysis. They can be analyzed separately later in other ways.

Our analysis methodology was based on research that successfully employed earlier research that found patterns of causation in ground damage incidents.[29]

7.1.3 Analysis Results

The purpose of an error database is to find causal factors and interventions beyond those involved in each particular incident. If one incident had poor wording on a workcard, we would just correct that workcard, but if we found several similar incidents we would review all of our workcards for potential changes. The first analysis of the current MEDA-derived database was aimed at finding common causal factors. Bear in mind earlier comments that this database can only find effects recorded by the incident analyst. If a factor is not recorded, or is mis-recorded, the validity of the analysis will be in doubt.

The first step in analysis is to determine whether there are consistent patterns of causal factors for different errors. For example, if knowledge/skills is associated with improper installation more than other errors, then we can concentrate on improving knowledge or skills in order to impact installation errors. If there are no such associations, then we can conclude that our interventions are likely to be equally effective across all errors. We can answer such questions by testing for non-random patterns in cross tabulations of error and causal factors. As there are large numbers of classifications for each variable, most of our cross-tabulations would consist of empty cells. Thus, we begin by classifying each variable at its most aggregated level as shown in Table 2.

Table 2. Classifications of errors and causal factors

Errors	Causal Factors
0 No error recorded (usually audits)	**1. Information**
1. Improper installation	**2. Equipment/tools/ports**
2. Improper servicing	**3. Airplane design/configuration**
3. Improper/incomplete report	**4. Job/task**
4. Improper fault isolation/ inspection/ testing	**5. Knowledge/skills**
5. FOD (Foreign Object Damage)	**6. Factors affecting individual performance**
6. Equipment damage	**7. Environment/facilities**
7. Injury	**8. Organizational issues**
8. Other	**9. Supervision**
	10. Communication
	11. Other

Because there can be many different causal factors in each incident, when we count the occurrences of all causal factors, the total will exceed our total number of incidents. We can, however, analyze such a table for patterns, e.g. Table 3. Incidents with no error classification (usually audits) have been omitted from this table. The analysis uses the Chi- square test to determine whether some causal factors are over-represented in each particular error classification. The Chi-square statistic for Table 3 is 138.38, which with 53 degrees of freedom shows a highly significant relationship ($p < 0.001$). This means that there are indeed different patterns of causal factors for some error classifications, rather than chance distribution of data in Table 3.

The statistical analysis has established that patterns do indeed exist in the data. At this point, we can go on to examine the patterns for each error type statistically to see whether specific causal factors are important for each error type.

For one causal factor, Information, we can classify the data from Table 3 into those incidents where Information was cited as a factor and those where it was not cited. This analysis is given in Table 4. Again, we can use the Chi-square test to find statistically significant patterns. For this table, Chi-square was 42.3 with 6 degrees of freedom, a highly significant result ($P < 0.001$). We can go further in this table using a test called "normalized residuals" to see which table entries caused the significant result. Using this test, two cells in Table 4 had significantly more entries than would be expected by chance: these are shown in bold. The interpretation of the first bold entry is that Information was a significant factor for Improper Installation. Indeed the analysis showed over twice as many entries in this cell (36) than would be expected by chance (15.5). The other bold cell shows that Information was not a factor for Injury errors.

Such an analysis shows where changing one causal factor can have the most and least impact on errors. If we improve information, for example by better workcards or shift briefings, we can expect a significant impact on errors of improper installation, but almost no effect in errors resulting in injury. In this way, we have used statistical significance testing to make strong predictions about the effectiveness of each intervention strategy. One other point worth noting in Table 4 is that Information was a factor in almost half (45%) of all incidents, showing that the information environment is important in repair stations.

Table 3. Frequency of recorded causal factors by error classification.

	Error Classification							
	1	2	3	4	5	6	7	8
Causal Factors	Improper Installation	Improper Servicing	Improper/ Incomplete Repair	Improper Fault Isolation/ Inspection/ Testing	FOD	Equipment Damage	Injury	Other
1. Information	41	2	5	16	8	6	5	16
2. Equipment/ Tools/ Parts	8	0	1	5	4	4	16	3
3. Airplane Design/ Confirmation	6	0	1	6	3	0	5	0
4. Job/ Task	16	4	3	9	0	0	20	5
5. Knowledge/ Skills	16	1	3	8	2	2	5	8
5. Factors affecting Individual Performance	16	0	0	12	1	1	20	2
6. Environment/ Facilities	1	0	0	10	4	3	14	1

8. Organizational Issues	**18**	**4**	**5**	**12**	**4**	**0**	**5**	**3**
9. Supervision	**16**	**1**	**4**	**11**	**1**	**2**	**5**	**3**
10. Communication	**20**	**1**	**6**	**5**	**0**	**3**	**8**	**5**

Note: Total is greater than the number of incidents.

Table 4. Frequency of citing "Information" as a causal factor for each error classification. Numbers in bold are cells with significantly more incidence than chance.

Error Classification	Information Not a Factor	Information A Factor	Total
Improper installation	**21**	**36**	**58**
Improper servicing	**4**	**2**	**5**
Improper/incomplete repair	**2**	**5**	**6**
Improper fault isolation/ inspection/testing	**12**	**13**	**25**
FOD	**5**	**8**	**13**
Equipment damage	**5**	**6**	**13**
Injury	**49**	5	54
Other	13	16	30
Total	112	94	205

Continuing this analysis for each factor in turn, we find that for some factors there was no significant relationship while for others there was. Table 5 summarizes these analyses. There were four non-significant causal factors, showing that each of these was generally applicable, rather than differentially applicable to different errors:

2. Equipment/tools/ parts

3. Airplane design/ configuration

5. Knowledge and skills, i.e. qualifications

10. Communications

We can group the causal factors that were differentially associated with specific error classifications as shown in Table 6. This shows what causal factors are likely to lead to the most effective interventions. Examples are that Installation is strongly associated with Information and Supervision, i.e. whether the AMT is correctly prepared for the activity (e.g. having good documents and instructions) and whether supervision is present, knowledgeable and supportive. Conversely, Injury to an AMT is a function of Individual performance factors, and only rarely of Information or Environment (e.g. workplace design). Foreign object damage is, naturally, related closely to the Environment and hardly affected by Job/Task factors such as improper procedures. Fault isolation/inspection/testing has many causal factors largely centered around the human/human interactions.

It should be emphasized that such conclusions are based on statistically reliable tests, not merely selecting the largest few factors in a Pareto analysis. However, a number of points need to be addressed.

Table 5. Summary of over- and under-represented error classification for each causal factor. Any Chi-square value is considered not significant if it has a p value of greater than 0.05, indicated by a ---.

Causal Factor	Chi-Square (6 d.f.)	Significance	Over-represented Errors	Under-represented Errors
Information	42.31	P < 0.001	1. Improper Installation	6. Injury
Equipment/ tools/ ports	9.94	---	---	---
Airplane design/ Configuration.	12.29	---	---	---
Job/task	18.64	P < 0.001	2. Improper Servicing	5. FOD 5. Equipment Damage
Knowledge/skills	9.95	---	---	---

Factors affecting industrial performance	18.11	P < 0.002	4. Improper Fault Isolation/ Inspection/ Testing 6. Injury	8. Other
Environment/ Facilities	21.52	P < 0.001	4. Improper Fault Isolation/ Inspection/ Testing 5. FOD	6. Injury 8. Other
Organizational issues	33.46	P < 0.001	2. Improper Servicing 3. Improper/ Incomplete Repair 4. Improper Fault Isolation/ Inspection/ Testing	5. Equipment Damage 6. Injury 8. Other
Supervision	22.12	P < 0.002	1. Improper Installation 4. Improper Fault Isolation/ Inspection/ Testing	6. Injury 8. Other
Communication	10.65	---	---	---

1. Level of Analysis: This analysis was performed at the highest level, i.e. the broadest categories of causal factors and error classifications. This means that when we relate, for example, "Individual performance" to "Injury", we do not know which aspect of individual performance relates to which type of injury. Such knowledge needs a second level of analysis, but the data is rather sparse when it is dis-aggregated to such a level. Hence, statistical analysis may not yield useful results if carried to too deep a level.

2. Non-significant Factors. Just because a causal factor did not reach statistical significance in these tests does not mean that it is not related to errors. Rather, the meaning is such that a causal factor is equally represented across all error classifications. An example is causal factor 10: Communications, which appears to be equally a factor in all the error classifications.

3. Data Quality. As with any analysis, if a causal factor was not recorded by an analyst, then it will never appear in the data base and thus never contribute to our understanding. This points to the necessity to ensure reliability and validity in data collection. Do several analysts record the same causal factors when investigating a single incident? If the analysts are consistent, are they also correct? Such measures are rarely taken but should be part of any data base quality control system. As an example of the data quality concerns, a Chi-square analysis of a table relating the individual analysts to whether or not the "Information" causal factor was checked gave a significant result (Chi-square = 25.8, 4 df, $p < 0.001$). If all analysts were equally prone to find an "Information" causal factor one would expect no significant relationship, unless certain analysts were assigned to incidents in a non-random manner. In our analysis, one analyst found only a single information factor in 23 incidents, while another found 38 information factors out of the 60 he investigated. Such findings give some cause for concern.

Table 6. Most and least potentially effective interventions for each error classification based on significant over- and under-represented causal factors.

Error Classification	Causal Factors	
	Over-Represented (most effective interventions)	**Under-Represented (least effective intervention)**
Improper installation	1. Information 2. Supervision	---
Improper servicing	4. Job/task 8. Organizational issues	---
Improper/incomplete repair	8. Organizational issues	---
Improper fault isolation/ inspection/testing	5. Individual performance 6. Environment/ facilities 8. Organizational issues 9. Supervision	---
FOD	6. Environment/ facilities	4. Job/task
Equipment damage	---	4. Job/task 8. Organizational issues
Injury	---	1. Information 6. Environment/ facilities
Other		5. Individual performance 6. Environment/ facilities 8. Organizational issues 9. Supervision

7.1.4 Conclusions on Incident Analysis

The two objectives of this analysis were achieved: a demonstration of how statistical analysis of a database can lead to practically-useful patterns, and a demonstration that the information environment plays a large role in maintenance human error.

Our partner's database provided to be a useful sample of incidents found in repair stations. As researchers, we chose to recode the incidents ourselves to remove one potential source of coding inconsistency, but the analysis we performed would be quite feasible from the current database for an organization which trusted its analysts' recording accuracy. The patterns we found, as in our earlier ground damage study, were useful in pointing directly to intervention strategies. If one error type, such as Improper Installation, is the target of intervention, we now know that the unique causal factors are Information and Supervision. Thus we should emphasize these in any intervention, for example by improving documentation and ensuring that supervisors are technically and managerially effective. We can also use the "General" interventions of Equipment/ Tools/ Parts, Airplane Design/ Configuration, Knowledge and Skills, and Communications. Then our list of potential effective interventions is cut from the original 11 to 2 (or 5), an efficient means of focusing intervention resources. Other entries in Table 6 can be used similarly to find which strategies are likely to be effective and which ineffective. As always, the caveats concerning data quality need to be kept in mind.

The second conclusion, that almost half of the incidents were information-related, supports the case for our closer examination of information-related design factors such as workcards. Note, however, that at the level of analysis used here, all "Information" instances are lumped together. At this level, we cannot specifically say whether the information issue was interpretation of an ill-designed workcard, poor advice from an engineer or unavailability of the required maintenance manual entry. Such additional data can only come from the next level of analysis, where the factor "Information" is dis-aggregated further. Here we could not do this with any statistical validity because of the small numbers of incidents involved at lower levels of the classification scheme in our partner's database. Overall, however, we have some justification for continuing to probe more deeply into the issues of workcard design, and particularly the issue of workcard variety, in repair stations.

8.1 QUANTIFICATION OF DOCUMENTATION ISSUES

We have shown that issues of documentation design can potentially affect human error, and hence public safety, in repair station operations. In order to quantify these effects, two studies were undertaken. The first collected several workcards, all based upon a similar task, and analyzed them for compliance with good human factors practices. The second took a subset of these documents and tested them in both repair stations and a major airline.

8.1.1 Analysis of Workcards

This assessment was performed to examine the differences among workcards developed for use by different companies. Initially, workcards from different airlines were collected, all of which had been created to satisfy either an FAA AD notice or a routine inspection. A preliminary review found that even though all of the workcards were created to satisfy the same set of criteria, they varied in major design issues such as depth of detail and flow of steps. Each design was then examined in depth and compared to the Document Design Aid Criteria developed by the FAA/SUNY Buffalo team. The detailed observations on each workcard were documented and are included in Appendix A. It should be noted that workcards C1 through C3 refer to similar cable inspections from three different airlines. Similarly, W4 through W6 are three different versions of a wing's fastener hole inspection/rework. One workcard design did not emerge as superior to the others, but all had a combination of positive design issues and areas needing improvement. These observed problems are shown in Table 7.

One of the most common design flaws found in the workcards was poor sequence of the work steps. For example, in card C2, instead organizing the steps by location, the steps are organized by problems (i.e. worn versus broken). Inspectors and AMTs find it more logical to examine one area for worn and broken wires at the same time, hence to avoid potential errors of omitting a step, the steps should be written as to reflect this. Also in card C2, the instructions for inspection are given first and the specific cables to inspect are listed at the very end. It is illogical to instruct how to inspect an item without some knowledge of which item(s) to inspect.

The signoff area was a workcard section frequently identified for modification. Some of the signoffs were placed such that they could easily be missed or marked at the wrong time (i.e. at the bottom of the page). Some documents contained “not required” signoffs, which according to human factors good practice should be removed from the sheet. Instead, some were shaded and others contained “XX” or “not req’d”. It would be simpler and less error prone to omit non-required signoff boxes altogether. For some workcards the signoffs are used too infrequently. This may lead to errors when a workcard is not completed by the end of a shift (because the next shift would not know specifically where to begin, or when returning to a workcard after an interruption). In workcard W4, there is no way to indicate the specific work that was completed. There is only one signoff block to cover a section that offers a mechanic a choice of work based on the inspection findings.

Maintenance Manual References appear in five of the six cards. Jumping back and forth between different sources is conducive to errors such as forgetting to finish procedures/ signoffs on the original card. A more error proof design would be to add the Maintenance Manual information directly in the workcard.

In one form or another, the misuse of capital letters was found in all six cards. Some workcards used capitals throughout the card, while others used capitals in notes, warnings, or titles. The use of all capital letters in a word slows the reading speed and makes text more difficult to read. Capital letters should be used only for short headings.

It is apparent from this analysis that workcards developed by different companies vary widely and, therefore, differ in the types of document design problems observed. Many of the problems occur in two or less of the workcards. Because of the wide range of issues identified it is important to evaluate each workcard on an individual basis. Very few generalizations can be made, except that AMTs or inspectors who have to switch between such radically different documents will be at a disadvantage compared to those who can adapt to a single workcard type.

Individuals have the ability to adapt to environments, even those that may be somewhat adverse or error prone. With respect to workcards, one would expect that some design flaws in the documents could be adapted to and adjusted by experienced users. However, when less experienced people use them or when the same user uses different documents, errors would be more likely.

Table 7. Observed problems in selected workcards

	Workcard						
		Cable			Wing		
Problem	**C1**	**C2**	**C3**	**W4**	**W5**	**W6**	**Total**
Need for better inspection criteria		**X**					**1**
Too much introductory information					**X**		**1**

Poorly placed page breaks						**X**	**1**
Warnings lack emphasis						**X**	**1**
Hard to read spacing						**X**	**1**
Too little detail	**X**				**X**		**2**
Deadends in the card	**X**			**X**			**2**
Poorly placed/no inspection limits	**X**		**X**				**2**
Bad placement of area to enter information				**X**	**X**	**X**	**3**
Misuse of capital letters	**X**	**X**	**X**	**X**	**X**	**X**	**6**
References to MM without return	**X**		**X**	**X**	**X**	**X**	**5**
Poor signoff design	**X**	**X**	**X**	**X**	**X**	**X**	**6**
Poor sequence of steps		**X**	**X**	**X**	**X**	**X**	**5**

8.1.2 Workcard Comprehension in Different Organizations

If there are indeed differences between good and poor workcards, between repair stations and airlines, and between using the same workcard versus changing between workcards, it should be possible to measure these effects experimentally. In previous workcard design projects we have been successful in using workcard comprehension studies to show that, for example, Simplified English reduces errors. Thus, a comprehension study should determine whether the factors given above do in fact impact workcard errors. Note that is not possible to compare on-the-job errors across organizations because of different reporting structures: some sites encourage error reporting while others discourage the practice.

8.1.2.1 Development of Workcards

Two workcards were used in this experiment. The first, here called "cables," were based on Boeing maintenance requirements for the inspection of central cables in the left wing and wheel well of a B-737 aircraft. The second, here called "wing" was based on AD90-05-0930 and AD94-06-0831 for the inspection of fastener holes in the rib upper chord on the left wing of a B-737 aircraft. For each workcard, two versions were collected from two different cargo-carrying companies. These were chosen as we have already tested samples from passenger airlines, and also because we wished to use a major airline that was expected to be unfamiliar with such workcards. Based on the content of these workcards, equivalent versions were created using the Documentation Design Aid (DDA). Table 8 shows the relative sizes of the documents and their language statistics. Note that the cable documents were not self-contained, requiring attachments, usually copies of material from the AD notice and the maintenance manual.

Table 8. Reading statistics for sampled workcards

Workcard	Format	Fleish-Kincade Reading Score	Equivalent Reading Grade Level
Cable	Format A	40.2	9.8
	Format B	51.6	9.5
	DDA	35.3	9.4
Wing	Format A	55.2	9.4
	Format B	34.0	12.0
	DDA	44.3	11.4

For each workcard set (cables, wing) a set of five questions was developed as the basis for the comprehension test. Each was a two part question, asking first for an answer and second for an explanation of where the answer came from. All questions could be answered correctly from the material provided. A typical question (from "cables") was:

2a. According to this workcard, what should you do if two or more broken wires are found in 12 continuous inches of cable?

2b. Identify the workcard section in which you found this answer.

All workcards were reproduced as MSWord documents, with proprietary identifies removed.

8.1.2.2 Experimental Design

With comprehension tests available on six workcards (two in Format A, two in Format B, and two in DDA format), quantitative answers could be obtained to the following questions:

1. Do all of the workcards have the same error rate? (This question is of less interest as previous studies have shown that DDA designed workcards improved comprehension.)

2. Does changing between formats (e.g. Format B followed by Format A) produce poorer performance on the second workcard than keeping the same format (e. g. Format A followed by Format B)?

3. Are AMTs in repair stations better able to maintain performance across a variety of formats than those in an airline which uses its own workcards exclusively?

To answer these questions, the experiment used two groups of AMTs: one of 36 AMTs at a large repair station where both Format A and Format B were in use, and one of 18 AMTs at a major airline maintenance facility that did not use either Format A or Format B. At each location, each AMT was given a "cable" workcard and comprehension test, followed by a "wing" workcard and comprehension test. There were nine possible combinations of Format A, B, or DDA for cable followed by Format A, B, or DDA for wing. An average of six AMTs were tested in each combination. Of the 36 AMTs at the repair station, 10 had used the format (A or B) they were given for the cable workcard, while 11 had used the format for the wing workcard.

Tests were made to determine whether the AMTs in the two locations differed. Table 9 shows these comparisons:

Table 9. Comparison of AMT statistics between locations

	Repair Station	Airline Facility	Significance of Difference
Age, years	36.2	48.6	T = 4.48, p<0.001
Years as A&P	9.1	26.0	T = 6.54, p<0.001
Years as AMT	11.1	25.6	T = 5.56, p<0.001

Years with employer	6.4	23.1	T = 5.81, p<0.001
Years in inspection	3.6	3.0	T = 0.52, p>0.5
% experience on Boeing	100%	89%	No test

The groups were quite different, despite being recruited in the same manner. Airline AMTs were about 10 years older, and had two to three times the experience of repair station AMTs on all measures except years of inspection, where there was no significant difference. Even in a sample not selected specifically for demographic purposes, the difficulties faced by repair stations in recruiting and keeping experienced AMTs are readily apparent. Almost all of the two samples had worked on Boeing aircraft.

8.1.2.3 Analysis Methods

The main results of the comprehension tests were measures of the response accuracy and time taken to complete the test. Response accuracy was not as simple to measure as in previous studies, as we have analyzed both parts of each answer together.

In fact 20 different types of response were found to the questions asked. These have been classified by considering whether or not they were correct with the correct justification, whether they were in error or whether the response was incomplete. Table 10 shows the classification of responses. We have classified as “correct” those answers that gave the correct result *and* referenced the appropriate place in the materials, either the workcard or the reference material. At the opposite end, all answers which were incorrect, or referenced general materials (e.g. “the GMM”) instead of the actual reference, were classified as “incorrect.” Between these, we have “incomplete” answers, and the correct answers but relying on the AMTs experience (e.g. “that is the way we do it”). The latter were very few in number (18 out of 550, or 3.3%) and, even though technically correct, they do not imply a sound approach to error reduction.

Analysis of performance was performed by finding the percentage correct answers by each AMT on both the first (cable) and second (wing) cards they used. Each measure was then used in an Analysis of Variance by Location, Card 1 and Card 2. Similar analyses were performed for percentage incorrect, percentage incorrect-plus-incomplete, and the times required for each card.

Table 10. Classification of answer responses in workcard comprehension study

Classification	Response Types

A. Correct	**On workcard and correct** **On reference and correct** **Used reference but on workcard and correct** **Referenced workcard but was on reference and correct**
B. Relied on Experience	**Used experience but on workcard and correct** **Used experience but on reference and correct**
C. Incomplete	**On workcard and incomplete** **On reference and incomplete** **Used reference but on workcard and incomplete** **Used experience but on workcard and incomplete** **Used experience but on reference and incomplete**
D. Incorrect	**On workcard and incorrect** **On reference and incorrect** **On workcard but just reference other materials (gave no answer)** **On reference but just referred to other materials (gave no answer)** **Used experience but on workcard and incorrect** **Used experience but on reference and incorrect** **Referenced workcard but was on reference and incorrect**

8.1.2.4 Results

Overall, there were no significant time differences for any format of either card, or between the locations. The only time difference was that the second card (wing) required a longer time to read and complete the questions (19.5 min) than the first (cable) card (14.1 min). Again overall, there were no significant differences in the percentages correct, or incorrect, or incorrect-plus-incomplete for the second (wing) card as a function of which card preceded it. There was only one significant effect of airline vs. repair station, for percentage incorrect-plus-incomplete for the first card ($F(1,49) = 5.95$, $p < 0.02$) with the repair station having a lower incorrect and incomplete rate (45.9%) than the airline facility (51.1%).

There were, however, strong and statistically significant effects of workcard format on accuracy of comprehension for both workcards. Table 11 summarizes these effects. Figures 2 and 3 show stacked plots of these data, where it can be seen that that the DDA format gave consistently higher percentages correct and lower percentages incorrect than the existing formats A and B. The differences for Formats A and B were more dramatic for the cable workcard. With the DDA format there was little difference in percentage correct between the cable (59.2%) and wing (59.5%) workcards, but large differences for both Format A (26.5% versus 46.5%) and Format B (21.6% versus 53.6%).

During the experiment, demographic data was collected on the AMTs, which could be related to performance. Age was measured as was the various forms of experience in Table 9. Also we measured whether or not an AMT (at the repair station) had used Format A or Format B previously. To test for any performance relationships, factor analyses were performed for all performance measures and all demographic measures. No significant correlations were found between any demographic measure and any performance measure. These results did not change when prior usage measures were substituted for the demographic measures. There was no effect of demographics or prior usage on any of the speed or accuracy measures.

Table 11. Percentage performance and significance data by workcard format

Workcard	Measure	p(correct)	p(incorrect)	p(incorrect & incomplete)
Cable	**Format A**	**22.5%**	**51.4%**	**62.2%**
	Format B	**21.6%**	**26.5%**	**55.6%**
	DDA	**59.2%**	**4.1%**	**31.6%**
	F(2,49) statistic	35.5	15.4	14.4
	significance	<0.001	<0.001	<0.001
Wing	Format A	46.5%	36.2%	50.4%
	Format B	53.6%	20.0%	36.3%
	DDA	59.5%	16.8%	29.6%
	F(2,49) statistic	4.22	4.43	3.93
	significance	<0.02	<0.02	<0.03

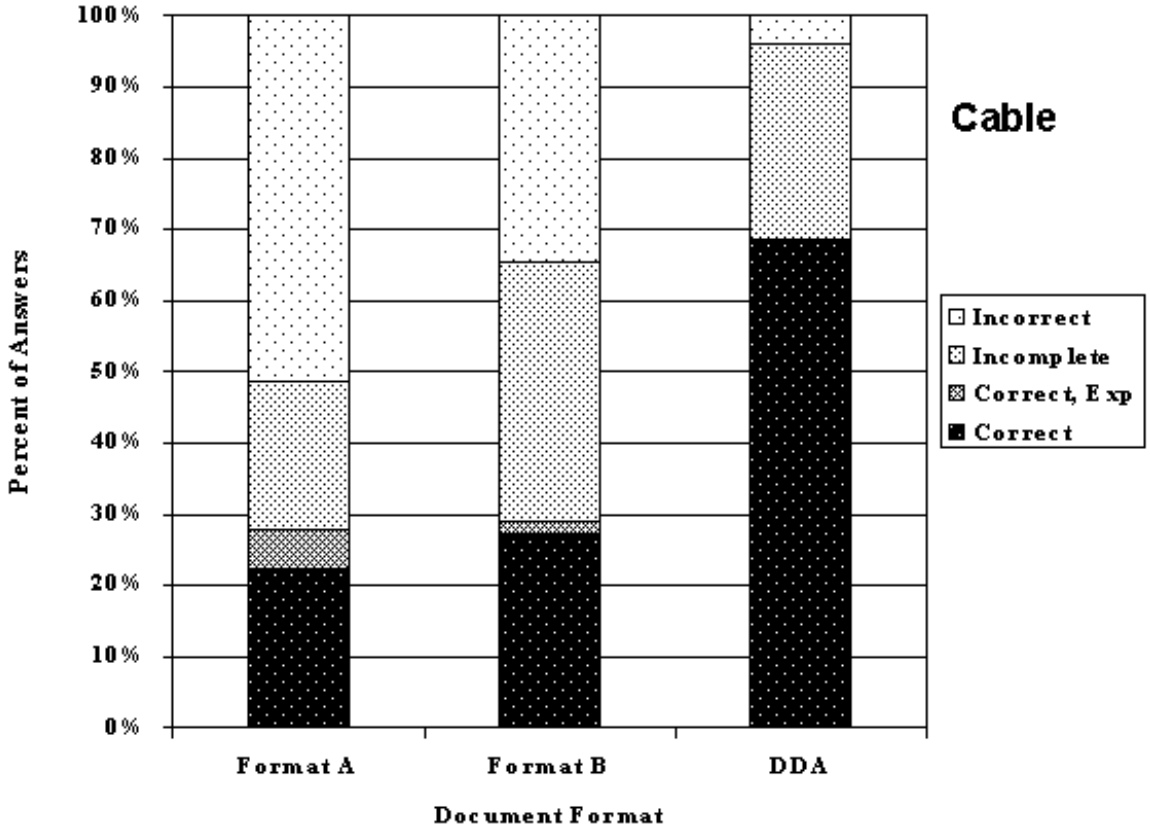

Figure 2. Performance of AMTs on Cable Document

Figure 3. Performance of AMTs on Wing Document

8.1.3 Discussion

The results of the workcard comparison show that there are indeed large differences between the workcards used by different aviation maintenance organizations. This is despite the fact that the different workcards analyzed here derived originally from common sources, either the manufacturer or an AD notice. When the workcards were compared to good human factors design practice, each company was not consistent in exactly how they deviated from these guidelines on different workcards.

Within a single company, any consistent differences from good practice can be compensated for by AMT experience, although reliance on such behavior is not in itself a good practice. However, when AMTs at repair stations have to switch between workcards, we have a new and potentially error-prone situation. There have been a number of good documentation guides available to procedure writers over many years, of which the DDA is only one recent example, so that designing better documents is not a difficult task.

Results of the workcard comprehension study reconfirm earlier data on the value of well-designed document formats for the improvement of workcard comprehension. There were dramatic differences in correct responses and incorrect responses between documents in the DDA format and documents in two existing formats (Figures 2 and 3). Again, the cable workcard, which was more difficult in that it required a number of attached references, showed the greatest benefit from the DDA format.

None of the other factors of interest, however, showed significant results. There were almost no performance differences between the repair station and the major air carrier, despite a large discrepancy in age and experience. Clearly, beyond a relatively short time on the job, additional years of experience make no difference to accuracy of comprehension, as confirmed by the factor analysis which found no relationship between experience (or even prior use of a carrier's workcards) and performance.

The conclusion from this study is quite practical. To improve workcard comprehension, ensure that the format follows human factors good practice. Other factors, such as having to use multiple workcard formats, or being at a repair station versus an airline, have much smaller effects than getting the format right.

Having said that, there are the usual practical caveats. Comprehension is not the only requisite for error-free performance. AMTs must go beyond workcard comprehension by performing the task correctly and by completing the paperwork correctly. These depend upon workcard content (did it give the AMT the correct information?), local working practices (do we follow the workcard every time?), and care in completing the workcard signoffs and any resulting NRRs or logbook entries. A second caveat is that we chose our repair station and airline maintenance facility as ones having good reputations, confirmed by our own observations at these sites over a number of years. Organizations who volunteer willingly may not be truly representative of the industry. From the rest of our study, we would estimate that both the repair station and the airline facility chosen were representative of good practice in their own spheres. As with previous human factors projects which rely on industry cooperation, we may not be seeing the poorer-performing organizations reflected in our quantitative data.

9.1 CONCLUSIONS AND RECOMMENDATIONS

From the site visits and the experimental studies, a number of needs for improved human factors application to repair stations can be seen. Each of these major points is considered in turn, with recommendations for improvement where possible.

9.1.1 Documentation Improvement

In both the site visits and the experiments, there was clear evidence that the documentation, particularly workcards did not meet the requirements of human factors good practice. This finding is really no different from conclusions already drawn at Part 121 operators.

There are many sources of information to improve the readability and usefulness of documents, of which perhaps the most readily available to the aviation community is the Documentation Design Aid (DDA). This can be accessed without charge via the http:\\www.hfskyway.com web site, or on the FAA 1998 Human Factors for Aviation Maintenance CD-ROM. Such principles as flowcharting, signoff design, Simplified English and the need for operational verification have been discussed in detail in our previous reports. This now needs to be implemented by the airlines. There is no reason each airline cannot have its unique logos and "look and feel" within a set of human factors guidelines.

9.1.2 Documentation Standardization

From the site visit interviews with AMTs many had experience of errors in moving from one customer's documentation to another. Although our comprehension test study could not measure this effect we cannot dismiss it from consideration. The cure for this problem would be, of course, standardization of documentation format and usage between air carriers. Although this appears unlikely at present, most carriers are moving towards electronic documentation, using SGML standards. This trend is being heavily promoted by airframe manufacturers. SGML combines text and graphics, so that documents produced by a standard based on that format could readily be re-formatted when needed. Indeed, if all air carriers used a well-human-engineered format (e.g. DDA) changes between carriers would be readily amenable to formatting with different templates.

In fact, if outsourcing continues to increase, the repair stations themselves may have a large role to play in any such standardization, as errors involving change between documents can be seen by customers as a source of human error reduction potential. Even now, repair stations could be a positive force in initiating change, as they have a good intuitive operational experience of what are good and poor formats of workcards.

One small part of this need is that for improvement and standardization of Non-Routine Repair (NRR) documents. This is where many costly paperwork errors arise, and there is a reasonably simple solution through information technology, such as a uniform interface made to handle a wide variety of NRR formats, ensuring reduced documentation errors.

9.1.3 Error Control Mechanisms

While most repair stations have systems in place to detect, investigate and mitigate error, these systems are usually quite traditional. Because human errors comprise such a large fraction of all errors, better understanding of human error mechanisms is needed if progress is to be made in error control. The sites we visited were justly proud of their low error rates, and their performance on regulatory audits (e.g. NASIP), but in this report we have documented many places where human error is possible, so that continuing efforts are required.

As with the major airlines, repair stations need help in understanding and implementing human factors programs. Again, there are many sources available such as the http:\\www.hfskyway.com web site and the series of CD-ROMs from the FAA Office of Aviation Medicine, Research and Special Projects. There are also training courses in great variety run by consultants. But bridges need to be built to show that these sources do indeed apply to repair stations. Examples exclusively from a major airline environment, or even using different aircraft types, can create the impression that these principles do not generalize. The human factors community know that these ideas and solutions do indeed generalize, even to general aviation, military aviation or beyond these to nuclear power plants or marine transport, but it is not the human factors community that needs convincing.

At least one repair station has taken a lead in this activity, implementing human factors programs and developing its own error analysis software. That organization is willing to share its insight, at conferences and in papers, in the interests of safety. It deserves a wider audience among repair stations in the USA and abroad.

9.1.4 Turnover and Training

Turnover among both labor and management is high in the third-party repair industry as a whole. When temporary (contract) personnel are also a substantial part of the workforce, the potential for human error due to lack of specific knowledge can only increase. To perform a task correctly, a repair station AMT must know the aircraft systems, plus the repair station procedures, plus the customer procedures. This knowledge takes time to acquire, even if the AMT has background and experience in the industry. Our comprehension study showed, somewhat inadvertently, the large difference in experience levels between an air carrier and a repair station. This experience did not appear to affect workcard comprehension, but the AMT's job goes far beyond that step.

The industry's answer has been largely one of training, which showed varying quality levels even across our sample. In addition to the variable quality of the training, the cost in time and resources can be a significant burden on repair stations. At the very least, improved and more uniform training delivery and evaluation would help, perhaps using computer-based systems, although content rather than delivery mode is the key issue.

On the broader level, the problem of labor turnover needs to be tackled more directly than by training. Why do qualified people leave? Is it just money, or is "money" just an acceptable answer in an exit interview? A broader organizational analysis is needed in this area, perhaps using socio-technical systems (STS) methodologies.

9.1.5 Organizational Pressures

While all aviation maintenance must be done correctly, on time and within a budget, the commercial pressures are perhaps more apparent in a repair station context. AMTs and inspectors we interviewed would introduce these subjects much more frequently than their counterparts at major airlines. To some extent, management shields the workforce from delivery and cost pressures, particularly in inspection, but the pressures are there and are felt. There is no evidence that these pressures have contributed directly to errors, but in fairness such questions are rarely asked in typical error investigations.

The issue of customer relationships is part of a much broader one concerning responsibility in maintenance, when a maintenance chain is extended beyond the original aircraft operator. As such it is beyond the scope of the current project except where it impinges upon how individuals on the hangar floor make their decisions. The issue is raised here as a concern rather than as a conclusion with a recommendation for future action.

10.1 REFERENCES

1. McKenna, J. (1997). Safety board targets repair station operation. Aviation Week, September 15, 1997, 30-31.

2. McGrath, R. N. (1998). Economics and Safety in Maintenance Outsourcing, Advances in Aviation Safety Conference and Exposition, Daytona Beach, FL., Engineering Society for Advancing Mobility Land Sea Air and Space (SAE) Paper 981203.

3. DeDad, J. A. (1996). The high cost of the low bid. EC&M Electrical Construction and Maintenance, 95(9), 11.

4. Knott, D. (1996). Oil industry risks skills shortage. The Oil and Gas Journal, 94(21), 36.

5. Kamm, S. (1997). Outsource discourse. American Libraries, 28(9), 63.

6. Humphrey, C. (1990). The real promise of out-sourcing is yet to come. PC Week. 7, 131.

7. Drury, C. G. (1998). Case study: error rates and paperwork design. Applied Ergonomics 29(3), 213-216.

8. Reason, J. (1997). Approaches to controlling maintenance error. FAA/AAM 11th Meeting on Human Factors Issues in Aviation Maintenance and Inspection, San Diego.

9. Hollnagel, E. (1997). CREAM-Cognitive Reliability and Error Analysis Method, Elsevier Science.

10. Drury, C. G., P. Prabhu, & Gramopadhye, A. (1990). Task Analysis of Aircraft Inspection Activities: Methods and Findings, In Proceedings of the Human Factors Society 34th Annual Conference, 1181-1185.

11. Wenner, C., & C. G. Drury (1997). Human error and ground damage. Proceedings of the 9th International Symposium on Aviation Psychology, Columbus.

12. Drury, C. G., Sarac, A., & Kritkausky, K. (1998). Evaluation of Documentation Formats. Phase Eight, Progress Report, DOT/FAA/AM-97/, National Technical Information Service, Springfield, VA

13. Wright, P., & Barnard, P. (1975). Just fill in this form--a review for designers. Applied Ergonomics, 6, 213-220.

14. Hartley, J. (1993). Spacing and layout. Computers and Typograph, Oxford, Intellect.

15. Haydon, L. M. (1995). The Complete Guide to Writing and Producing Technical Manuals. New York, John Wiley & Sons, Inc.

16. Penman, R., & Sless, P. (1994). Designing information for people, Communication Research Press.

17. Haney, L. (1969). The Complete Guide to Writing & Producing Technical Manuals. New York, John Wiley & Sons, Inc.

18. Konz, S., & Dickey, G. (1969). Manufacturing Assembly Instructions: A summary. Ergonomics, 12(3), 369-383.

19. Reder, L. M., Charney, D. H., & Morgan, K. I. (1986). The role of elaborations in learning a skill from an instructional text. Memory & Cognition. 14(1), 64-78.

20. Kanki, B. G., & Walter, D. (1997). Reduction of maintenance error through focused interventions. In *Meeting Proceedings of the 11th Federal Aviation Administration Meeting on Human Factors Issues in Aircraft Maintenance and Inspection:* Human error in aviation maintenance, 117-121.

21. Patel, S., Drury, C. G., & Lofgren, J. (1994). Design of workcards for aircraft inspection. Applied Ergonomics 1994, 25(5), 283-293.

22. Taylor, J. C. (1992). Communication Guidelines for Maintenance, Interim Report for the FAA, Office of Aviation Medicine.

23. Patel, S. C., Pearl, A., Koli, S., & Drury, C. G. (1994). Design of Portable Computer-Based Workcards for aircraft Inspection. Washington, D.C., Federal Aviation Administration Office of Aviation Maintenance.

24. Chervak, S., Drury, C. G., & Ouellette, J. L. (1996). Simplified English for Aircraft Workcards. Proceedings of the Human Factors and Ergonomic Society 39th Annual Meeting, 303-307.

25. Pearl, A. and Drury, C. G. (1995). Improving the reliability of maintenance checklists. Proceedings of the Human Factors and Ergonomics 39th Annual Meeting.

26. Drury, C. G., & Sarac, A. (1998). Evaluation of documentation formats. Human Factors in Aviation Maintenance - Phase Eight, Progress Report, DOT/FAA/AM-97/, National Technical Information Service, Springfield, VA.

27. Reason, J. (1990). Human Error, Cambridge, U.K.: Cambridge University Press.

28. Boeing (1994). Maintenance Error Decision Aid. Seattle, WA: Boeing Commercial Airplane Group.

29. Drury, C. G., Wenner, C. A. and Murthy, M. (1998). Evaluation of ground damage interventions. Human Factors in Aviation Maintenance - Phase Eight, Progress Report, DOT/FAA/AM-97/, National Technical Information Service, Springfield, VA.

30. AD90-05-09.

31. AD94-06-08.

11.1 ACRONYMNS

A&P Airframe and Power plant (license)

AAM Office of Aviation Medicine

AD Airworthiness Directives

AMT Aviation Maintenance Technician

ASRS Aviation Safety Reporting System

ATA Air Transport Association

CMO Certificate Management Office

DDA Documentation Design Aid

ERNAP Ergonomics Audit Program

FAA Federal Aviation Administration

FAR Federal Aviation Regulation

FSDO Flight Standards District Office

GAO General Accounting Office

GMM General Maintenance Manual

MEDA Maintenance Error Decision Aid

NASA National Aeronautics and Space Program

NASIP National Safety Inspection Program

NDI Non-destructive inspection

NRR Non-routine Repair

NTSB National Transportation Safety Board

OASIS On-line Aviation Safety Inspection System

QA Quality Assurance

QC Quality Control

PMI Principal Maintenance Inspector

RII Required Inspection Items

SGML Standard Generalized Markup Language

STS Socio-technical System

SUNY State University of New York

APPENDIX A

A.1 CABLE INSPECTION – AIRLINE 1

A.1.1 Readability Score

Flesh-Kincade Score:
40.2

Grade Level:
9.8

A.1.2 Observed Problems

- The workcard should not be written in all capital letters. It is difficult to read and reduces reading speed.
- Minimal detail is given in the instructions. No information is given on how and when to replace the cables.
- There are two references to the Maintenance Manuals. Jumping to various sources, could be conducive to errors such as forgetting to finish the procedures/signoffs of the original card.
- "Dead ends" occur every time a problem is found.
- The signoff boxes which are not needed should be removed instead of labeled with "XX"
- Three specific cables are indicated on this card. However, no inspection limits are included, except in the introduction. This could be confusing as to what parts of the cable should be included.
- There is no reference to the inspection of the cable related hardware.

C1	A/C REG: DATE: STATION:	**BOEING 727** **“C” CHECK TASK CARD**	TC NO: 1-500-55 PAGE: 1 of 1 DATE: 01/01/98

LH WING AREA: 5-00 **SKILL:** **STD.MH:** **ET.HR:**

TASK: CLEAN/INSPECT – FLIGHT CONTROL CABLES	**ACCOMP. BY**	**INSP. BY**
REFERENCE: MM 12-20-01 MM 27-51-71	XX	XX
1. PERFORM A GENERAL VISUAL INSPECTION OF THE FOLLOWING CABLES. DISPLACE EACH CONTROL SUFFICIENTLY TO ENABLE PROPER INSPECTION OF THOSE PORTIONS OF CABLE WOUND AROUND A DRUM, PULLEY OR THROUGH FAIRLEADS. **SDN:** A-66-01 A. AILERON CONTOL CABLES.		
SDN: A-66-01 B. SPOILER CONTROL CABLES.		
SDN: A-55-01 C. FLAP ASYMMETRY CABLES		

A.2 CABLE INSPECTION – AIRLINE 2

A.2.1 Readability Score

Flesh-Kincade Score:
63.3

Grade Level:
7.7

A.2.2 Observed Problems

- The flow of the workcard is not optimal. Instead of being organized by location, the steps are organized by problem (i.e. wear vs. broken). It is more logical to examine one area for worn and broken wires at the same time.

- The signoffs should be located next to the corresponding steps and not at the bottom of the page. It is easier to miss one or signoff the wrong step, otherwise.

- In the heading, in place of all capital letters, bold should be used for emphasis.

- It is good to include the wear criteria right in the workcard as a reminder to the mechanics, but some criteria (i.e. too much wobble) are not clearly defined, and it is up to the mechanic to determine if criteria have been met.

- This card also asks the mechanic to go through the entire plane to check cables, then repeat to check hardware separately.

SPOILER, AILERON, FLAP & ENGINE CONTROL CABLES INSPECTION

A. Examine Spoiler, Aileron, Flap & Engine Control Cable for broken wires

1. To examine a control cable for broken wires, rub a cloth along the length of the cable. Broken wires are indicated where the cloth gets caught on the cable.

NOTE: Wires usually break where cables go through fairleads or around pulleys. Examine these areas carefully.

2. Replace a 7X7 control cable when one of these conditions is found:

a. Two wires are broken in 12 continuous inches of cable.

b. More than three wires are broken in the total cable length between the two cable terminals.

c. One wire is broken on a corroded cable.

3. Replace a 7X19 control cable when one of these conditions is found.

a. Four wires are broken in 12 continuous inches of cable.

b. More than six wires are broken in the total cable length between the two cable terminals.

a. One wire is broken on a corroded cable.

B. Examine Spoiler, Aileron, Flap & Engine Control Cable for wear

1. External Wear

a. For cables in the pressurized area (fuselage cables), replace a cable if one strand has worn wires where one wire cross section is decreased by 40 percent or more.

b. For cables not in the pressurized area, replace a worn cable where you cannot identify the wire strands on the worn side.

c. Replace all cable assemblies which have damage caused by rust or corrosion

NOTE: One broken wire is permitted in a cable assembly if the broken wire is in a straight part of the cable assembly and does not go over a pulley, through a pressure seal, or through a fairlead. The cable conditions must agree with the other specifications of this procedure.

C. Spoiler, Aileron, Flap & Engine Cable Travel Inspection

1. Make sure the cable guides and fairleads are clean and correctly aligned.

2. Make sure the cable guides, fairleads, rub strips, and grommets are not worn or broken.

3. The minimum clearance from the adjacent structure shall be as follows except when noted.

a. Control Cables 0.50 inches

b. Pulley Brackets 10.0 inches of the cable break point, the minimum clearance shall be 0.10 inches

D. Inspect Spoiler, Aileron, Flap & Engine Cable Pulley for wear:

1. Unusual wear pattern

2. Too much wobble

3. Failure to turn freely and smoothly

C2 AIRLINES, INC. **B737-200 C-CHECK**		
SPOILER, AILERON, FLAP & ENGINE CONTROL CABLES INSPECTION		CARD NUMBER 11-123
A/C NUMBER	STATION	DATE

		SPOILER, AILERON, FLAP & ENGINE CONTROL CABLES INSPECTION
		A. Examine Spoiler, Aileron, Flap & Engine Control Cables for broken wires.
		B. Examine Spoiler, Aileron, Flap & Engine Control Cables for wear.
		C. Spoiler, Aileron, Flap & Engine Cable Travel Inspection
		D. Inspect Spoiler, Aileron, Flap & Engine Cable Pulley for wear.

A.3 CABLE INSPECTION – AIRLINE 3

A.3.1 Readability Score

Flesh-Kincade Score:
51.7

Grade Level:
9.6

A.3.2 Observed Problems

- The workcard should not be written in all capital letters. It is difficult to read and reduces reading speed.

- There is a reference to the Maintenance Manuals for inspection details. Jumping to various sources could be conducive to errors such as forgetting to finish the procedures of the original card.

- The card contains only a single sign-off. This could cause a problem, especially if the end of a shift does not finish the procedure, because the next shift may not know where to begin.

- The seven specific cables are listed at the end of the workcard.

- Inspection limits are specified in the inspection note, which may be missed because it is not part of the workcard.

- This card requires two passes- one for the cables and another for the hardware.

C3 Aircraft Maintenance
Work Card

HANGAR MAINTENANCE	INS INSPECTION	WO 000123
50 LEFT WING	**LEFT WING & WHEEL WELL; FLT CONT CABLES AND INSTALL**	
D02 BASE INSPECTION	**B727 FC7**	**WORK CARD 2356-00**
A/C Registration N193FE	**Page 1 of 1**	**REVISION** 0002 01-Jan-1998

CHECKED BY	**ACCOMP BY**	**SIGN OFF ITEM**
	XXXXXXXX	1. INSPECT LEFT WING/WHEEL WELL FLIGHT CONTROL CABLES (SPEC 2700-113, 3200-104)

Date accomplished: **Sign-Off's**
Complete:

TOOLS/MATERIALS

C3 APPROVED EQUIVALENT SUBSTITUTES MAY BE USED

MM 12-20-1, 20-20-4	81, 82, 83, 84	**7777-88**	1/2
TECHNICAL REFERENCES	**ZONES**	**CARD NO.**	**PAGE**

WORK STEPS/NARRATIVE BEGINS ON PAGE 2/2

PLANNERS NOTES AND INSTRUCTIONS:

OPERATION OF FLIGHT CONTROLS IS REQUIRED TO PERFORM THE TASKS ON THIS WORKCARD.

A/C TYPE	WORK CARD TITLE	CARD NO.	REV. DATE	PAGE
B-727	LEFT WING AND WHEEL WELL; FLT CONTROL CABLES AND INSTALLATIONS - INSPECT	7777-88	01/01/98	2/2

INSPECTION NOTE:

FOR THIS INSPECTION, THE WHEEL WELL AREA IS FROM THE LEFT MAIN GEAR TRUNNION TO THE RIGHT GEAR TRUNNION AND AS MUCH FURTHER OUTBOARD IN THE WING AREA AS CAN BE SEEN WITHOUT OPENING OTHER ACCESS PANELS.

---

1. INSECT CONTROL CABLES.

   A. INSPECT CONTROL CABLES FOR CORROSION AND BROKEN WIRES. REFER TO MM 20-20-4 FOR ALLOWABLE LIMITS. OPERATE AILERONS AND SPOILER TO ENDS OF TRAVEL AND INSPECT ENDS OF CABLES THAT WERE BEHIND THE PULLEYS.

   B. CHECK THAT CABLE PRESSURE SEALS, GROMMETS, AND FAIRLEADS IN VICINITY OF CABLE LENGTH BEING CHECKED DO NOT BIND OR DEFLECT CABLE. ADJUST OR RELOCATE SEALS, GROMMETS, FAIRLEADS AS REQUIRED.

C. INSPECT CONTROL CABLE PULLEYS, FAIRLEADS, DRUMS, AND QUADRANTS FOR SERVICABLE CONDITION AND SECURITY.

1) TRAILING EDGE FLAP CONTROL CABLES

2) FLAP FOLLOW-UP CABLES

3) I/B & O/B FLAP POSITION TRANSMITTER CABLES

4) AILERON CONTROL CABLES

5) SPOILER CONTROL CABLES

6) SPOILER BYPASS CONTROL LINKAGE

7) SPEED BRAKE CONTROL CABLES

==========1C, SPEC 555-55, 666-66, 777-77

A.4 WING INSPECTION – AIRLINE 4

A.4.1 Readability Score

Flesh-Kincade Score:
36.6

Grade Level: 9.4

A.4.2 Observed Problems

- The workcard's design makes the user jump back and forth within the card. Specifically, section III step 1c on page 4 refers you back to step section II step 3 b,c, and d.

- The signoff boxes which are not needed should be removed instead of labeled with "Not Req'd."

- On page five, you must enter information in the center of the instruction text. This can be easily missed. It should be moved off to the side where the signoffs are located.

- There are many references to the Maintenance Manuals. Jumping to various sources, could be conducive to errors such as forgetting to finish the procedures/signoffs of the original card.

- If the chord has been previously repaired and no cracks were detected, no instructions are given (a "dead end").

- In the titles and notes, in place of all capital letters, bold should be used for emphasis.

- There is only one signoff for multiple steps (step 1).

- There is no indication of which work was completed since there is only one signoff block for a section that offers the mechanic a choice of work based on the inspection findings.

Airline W4 **PLANNER**

_____

WORK INSTRUCTION CARDS ENGINEER_____

Q.A._____ ATTACHMENT A CARD 1 OF 9

PART 1, INSP, RH WINGS-RIB UPPER CHORD AT BL 70.5 FASTENER HOLE REWORK AND

EO1-2345-6-77889 TITLE REPAIR BAC SB 727-57-0112 R4, AGING A/C AD 90-06-09 & 94-07-08

TERM MOD[ ] REPETITIVE [X] WIC REV DATE 1-15-98 EST MHRS 54.0 EST SPAN TIME 9.0

A/C NO._____ COMPONENT NO._____COMPONENT S/N_____

MANDATORY [X] RECOMMENDE D [ ] MINOR [X] MAJOR [ ] AD[X] WO/WRI#_____

GENERAL (PURPOSE)

This Work Instruction Package (Part 1) accomplishes Visual and Eddy Current Inspection to detect fatigue cracks propagating from fastener holes in the RH wing-to-body rib upper chord at Body Station 760. Inspection and fastener hole rework per this Work Package will improve the fatigue life of the Wing rib upper chord.

COMPLIANCE STATEMENT

E.O. 2345-6-77889Rev. I, Part 1, inspection RH Side has been completed with.

Mechanic Signature _____ Employee # or Certificate # _____ Date _____

WORKLOAD/PRODUCTION PLANNING OR VENDOR ON-SITE REPRESENTATIVE

I verify that all pages of this Engineering Order WIC have been properly completed with required signatures and Aircraft/ Engine/component identification and a copy of this page has been faxed to A/C Records at (222) 111-2222 or Powerplant Records at (222) 333-4444.

Signature _____ Employee # or Certificate # _____ Date _____

E.O. TIME TRACKED WORKCARD SUMMARY FOR AIRWORTHINESS DIRECTIVES

AIRCRAFT/ENGINE RECORDS DEPT: Take immediate action to update time tracked data as directed below:

A. Inspection of RH Rib Upper Chord accomplished. WIC part 1 remains Repetitive

at 14,000 Flight Cycle Intervals – or – if accomplished to comply with EA or

Small Repair WICS, Refer to those Documents for reduced Inspection Intervals.

REFERENCE DOCUMENTS

AD 00-11-22 AND 33-44-55

BAC SB 727-99-0112 Revision 4 and Notice of Status Changes 1, 2, and 3.

BAC DWG. 111222333 Upper Rib Chord Repair/Preventive Mod

727 SRM Subjects 55-00-88 and 55-00-10

BAC Document 880 Aging Airplane Mod Program

MATERIAL

The following Hi-Lok fasteners are common hardware that is to be supplied by the vendor accomplishing this work. Fastener lengths can range from -9 to -18.

PART #	QTY	NOMENCLATURE
ZYX456789-( )	A/R	Bolt
XYZ987654-( )	A/R	Bolt
ZYX234567	6	Collar

Airline W4 **EO1-2345-6-77889**

WORK INSTRUCTION CARDS

CARD 2 OF 9

SPECIAL TOOLS

Cold Work Tooling (Ref 727 SRM Subject 51-30-10)

Suggested Cold Work Tool kit Part Numbers:

LMN-727-57-0112-1

PRL-727-57-0112

WORK CARD EFFECTIVITY BY SERVICE BULLITEN GROUPING

GROUP 1 AIRCRAFT

GROUP 2 AIRCRAFT

GENERAL INFORMATION

This Work Instruction Package is now divided into Five parts as follows:

NOTE: Each Work Card part is separated for LH and RH Side Accomplishment.

Part 1: Accomplishes Initial/Repetitive inspections and Fastener Hole Rework of Wing rib upper chords at BL 70.5. If cracks are detected, obtain part 8 or part 3 Work Instruction Cards (WICS) as applicable to accomplish Preventive modification or Interim Small repair.

Part 2: Accomplishes the Preventive Modification during Aging Aircraft Compliance, or when cracks are found during Inspections on Group 1 Aircraft with more than 50,000 cycles.

Part 3: Accomplishes the Small Repair (Interim Repair) when cracks are detected that are less than maximum limits on aircraft with less than 50,000 cycles.

Part 4: Accomplishes the Large Repair when cracks are found that exceed Specified Limits.

Part 5: Accomplishes Rework of BS 760.95 Frame which is required on aircraft Previously modified per Service Bulletin 727-57-0112, Revisions 2 or 3.

INSTRUCTIONS	ACCOM by	CHKD by

ACCOMPLISHMENT INSTRUCTIONS

	M	Not Req.

SECTION I, ACCESS: RH WING RIB UPPER CHORD AT BL 70.5

WARNING: TO AVOID INJURY TO PERSONNEL OR DAMAGE TO EQUIPMENT, MAKE CERTAIN ADEQUATE PRECAUTIONS ARE TAKEN WHILE PERFORMING ANY WORK IF ELECTRICAL POWER IS APPLIED TO THE AIRCRAFT.

1. Remove and retain the following to get access to the RH Wing Rib upper Chord:

a. Remove floor panels as necessary to get access to the center section upper surface, Body Station 740 thru 783 (Ref 727 Maint.

Manual subject 53-21-11). b. Remove interior access panels as necessary to get access to the center section upper surface, Body Station 740 thru 783 (Ref 727 Main. Manual subject 25-21-1). c. Remove pressure seal and pressure pan to get access to the chord, Body Station 740 thru 760 (Ref 727 Maint. Manual subject 51-30-1). d. Remove the wing-to-body fairing as necessary to get access to Body Station 740 thru 783 (Ref 727 Maint. Manual subject 12-30-2).		
SECTION II, INSPECTION: RH WING RIB UPPER CHOR (NOT PREVIOUSLY REPARIED) ◯1.Prior to fastener removal for Eddy Current inspection, check right side BL 70.5 upper rib chord to determine if previous repairs per Drawing 65-68492-18 have been accomplished. a. If RH rib has a repair installed per Drawing 65-68492-18, accomplish visual inspection per Section III (page 4). b. If no previous repairs are installed, remove and discard existing fasteners and Eddy Current inspect per Figure 1 Circle note Steps 1 thru 3. In addition, accomplish a close visual inspection along the upper fillet radius of the rib chord for cracks.	M	NDT
NOTE: Fastener Hole Rework (Cold Working) is to be accomplished only once during the initial inspection. If holes are currently 5/16 diameter (Cold Worked) reinstall same size fasteners as specified in Figure 2. ◯2. If no cracks are found, enlarge and cold work holes (if not previously accomplished) and install new fasteners per Figure 2 Circle note Steps ◯1 and ◯2.	M	RII

3. If cracks are detected in RH rib chord, repair as follows: a. If cracks are found that are less than one inch total in length, and do not go into the horizontal flange, accomplish Small Repair on RH rib chord per Part 3 Work Instructions (WIC) on airplanes with less than 50,000 flight cycles at time the crack is found. 1) For airplanes with more than 50,000 flight cycles at time the crack is found, install Preventive Modification per Part 2 Work Instruction Cards (WICS) on both sides (Left and Right). b. If cracks are found that are more than one inch total in length, but do not extend aft of B.S. 766, or do not go into the horizontal flange, accomplish Preventive Modification (both sides) per Part 2 Work Instructions (WICS) prior to further flight. c. If cracks are found that extend aft of B.S. 766, but do not extend aft of B.S. 775.5, or do not go into the horizontal flange, accomplish Large Repair per Part 4 Work Instructions (WICS) on the cracked rib chord and the Preventive Modification on the opposite rib chord (if uncracked). d. If cracks are found that extend aft of B.S. 775.5, or do go Into the horizontal flange, Contact Engineering for repair Instructions.	M	M/I
SECTION III, INSPECTION: RH WING RIB UPPER CHORDS (PREVIOUSLY REPAIRED) 1. If RH rib chord has a repair installed, accomplish inspection as follows: a. Accomplish a close visual inspection along the upper fillet radius of the rib chord, and around the perimeter of external repair straps for cracks.	M	M/I
b. Gain access to inboard face of the rib upper chord vertical flange at sta 760.95. High frequency eddy current inspect the vertical flange of the chord around the perimeter of the tee clip joining the chord to the station 760 from to detect cracks propagating from underneath the tee clip. Use procedures in 727 NDT Manual, Part 6, Subject 51-00-00, Figure 4.	M	NDT
c. Any crack that has propagated from beneath the tee clip or beyond the external repair straps has exceeded the limits of the repair installed per Dwg. 65-68492. Remove existing repair and install, prior to further flight, the Preventive Modification or Large Repair (as applicable) per crack data of step 3. b, c, or d above.	M	M/I

INSTRUCTIONS	ACCOM by	CHKD by
NOTE: Complete inspection Signoff below by placing an X in the crack data yes or no blocks. If cracks are detected, indicate hole location and direction of crack (FWD/AFT). **RIGHT WING RIB UPPER CHORD AT BL70.5 - INSPECTED/HOLES REWORKED** **CRACK/S DETECTED** ____ _____ _____ yes rack location/direction no	M	M/I
SECTION IV, CLOSE-UP a. Re-install floor panels removed to get access to the center section upper surface, Body Station 740 thru 783 (Ref 727 Maint. Manual subject 53-20-11).	M	M/I
b. Re-install interior access panels removed to get access to the center section upper surface, Body Station 740 thru 783 (Ref 727 Maint. Manual subject 25-21-1).	M	NDT
c. Re-install pressure seal and pressure pan removed to get access to the chord, Body Station 740 thru 760 (Ref 727 Maint. Manual subject 51-30-1).		
d. Reinstall the wing-to-body fairing removed to get access to Body Station 740 thru 783 (Ref 727 Maint. Manual subject 12-30-2).		
WEIGHT AND BALANCE Inspection and Fastener Hole rework does not affect Weight and Balance.		
WORKCARD COMPLETION **NOTE:** This step is to alert the Aircraft Records Department to enter Time Tracked Data into the System. After completion of this workcard, go the Card 1 and check the open Block under the Heading, “E.O. TIME TRACKED WORKCARD SUMMARY FOR AIRWORTHINESS DIRECTIVES”.		

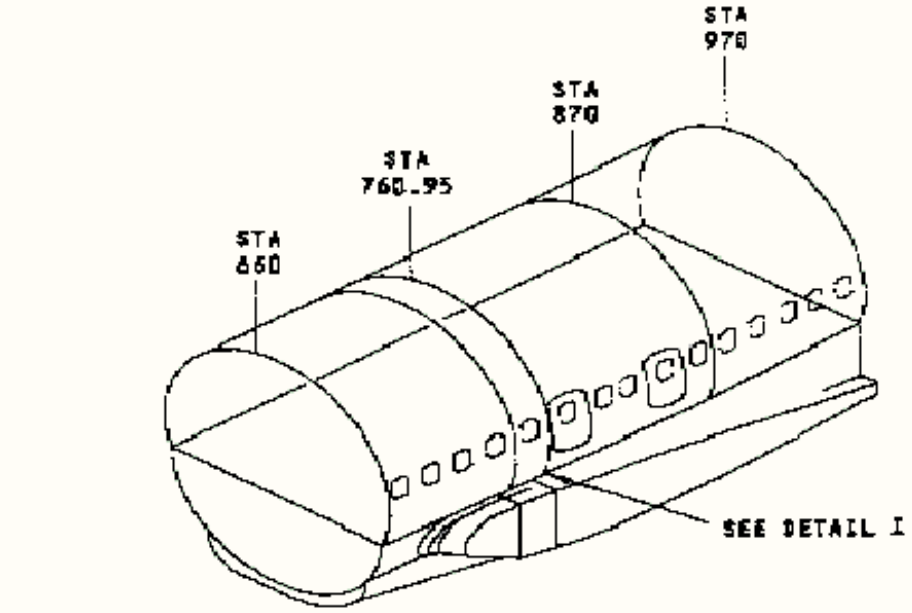

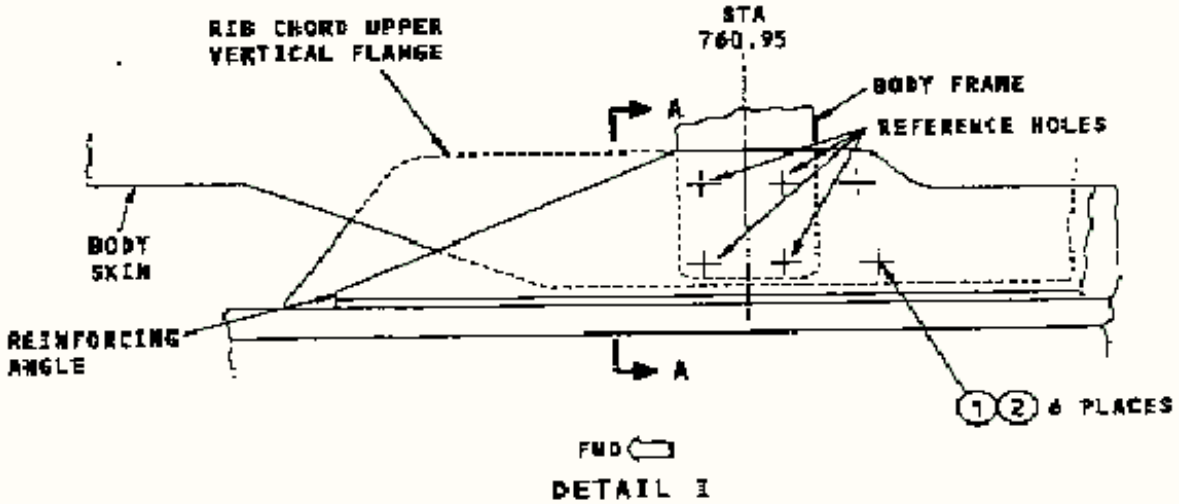

FIGURE 1. (SHEET 1 OF 2) INSPECTION

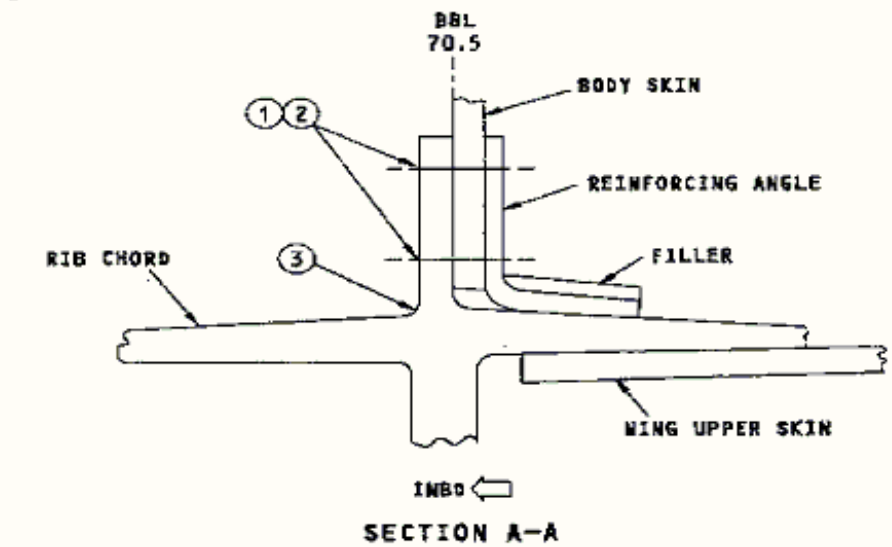

NOTE: The instruction given below agree with the numbers shown inside the circle symbols in the figure.

◯1 Remove and discard existing fasteners.

◯2 Accomplish eddy current inspection of the fastener holes (Ref Nondestructive Test Manual, D6-48875, Part 6, Subject 51-00-00, Figures 1 and 4).

◯3 Accomplish close visual inspection along the radius of the upper rib chord for cracks.

FIGURE 1. (SHEET 2 OF 2) INSPECTION

Airline W4 EO1-2345-6-77889

WORK INSTRUCTION CARDS CARD 8 OF 9

WO/WRI# _____

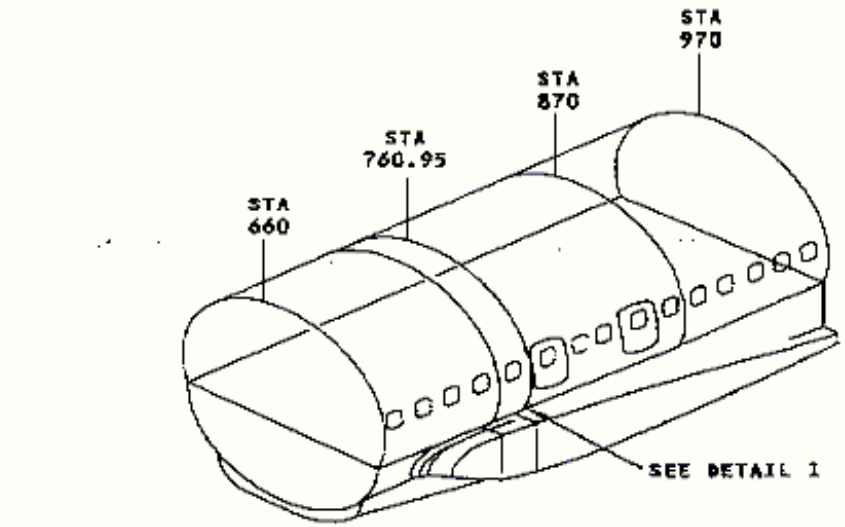

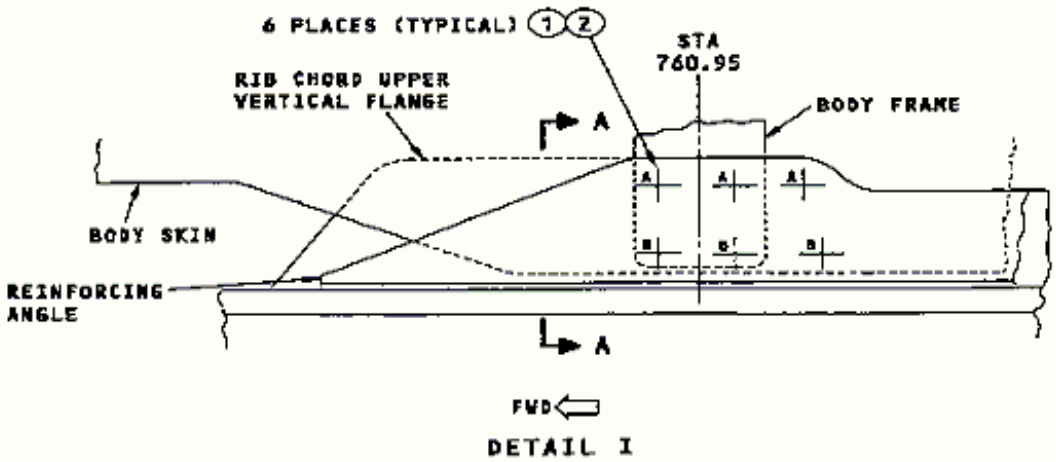

FIGURE 2. (SHEET 1 OF 2) COLD WORKING – FASTENER HOLE REWORK

Airline W4 **EO1-2345-6-77889**

WORK INSTRUCTION CARDS CARD 9 OF 9

WO/WRI# _____

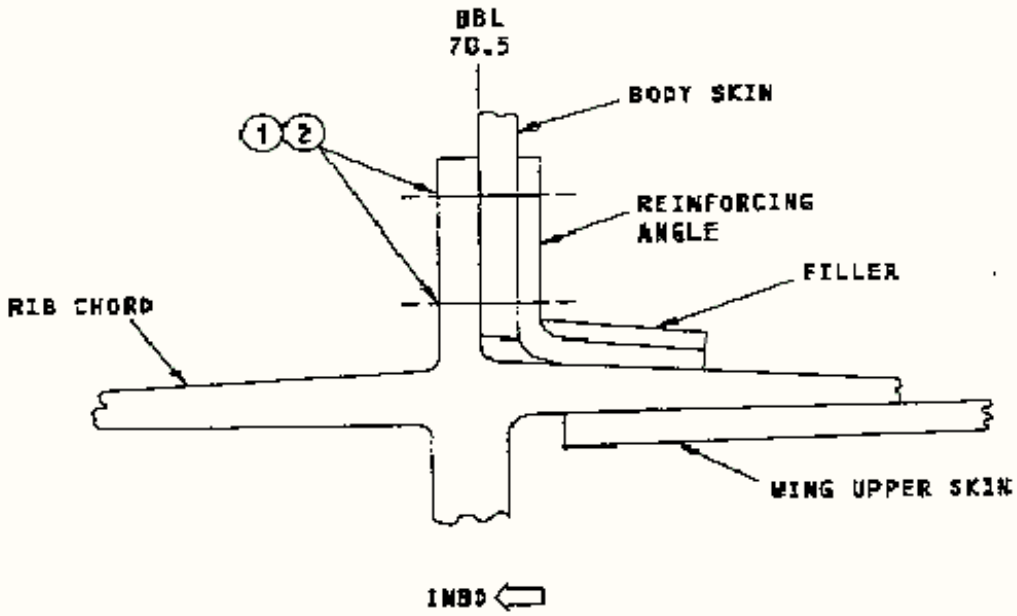

SECTION A-A

NOTE: The instruction given below agree with the numbers shown inside the circle symbols in the figure.

◯1 Low Interference Cold Work each hole. Use a start hole diameter of 0.3085 (+0.0030 or -0.0010) inch diameter. And get a final hole diameter of 0.309 (+0.004 or -0.000) inch diameter. Refer to the 727 Structural Repair Manual Subject 5-30-10.

◯2 Install fasteners as given below:

A. Increase the countersink diameter of the hole. Refer to 727 Structural Repair Manual Subject 51-30-08. Install Bolt, BACB30FN10- () length as necessary, and Collar BACC30M10.

B. Install Bolt BACB30FM10-() or BAC30FN10-() length as necessary to agree With the structure, and Collar, BACC30M10. If a Bolt BAC30FN10-() is installed, increase the countersink diameter of the hole. Refer to 727 Structural Repair Manual Subject 51-30-08.

FIGURE 2. (SHEET 2) COLD WORKING – FASTENER HOLE REWORK

A.5 WING INSPECTION – AIRLINE 5

A.5.1 Readability Score

Flesh-Kincade Score:
4

Grade Level:
12

A.5.2 Observed Problems

- The signoff boxes, which are not needed should be removed instead of being shaded.

- On page seven, you must enter information in the center of the instruction text. This can be easily missed. It should be moved off to the side where the signoffs are located.

- There are many references to the Maintenance Manuals. Jumping to various sources, could be conducive to errors such as forgetting to finish the procedures/signoffs of the original card.

- All capital letters are used for the final signoff. If emphasis is desired, bold letters should be used.

- Under step one, Figure 1 is referred. Figure 1 should be placed closer to the step to reduce the need to jump back and forth between the pages.

- If no cracks are found, Section 1 should be performed. Once this section is complete, there is no indication to return to perform the final signoff.

- If various other repairs are necessary, other appendices or sections are referenced. Again, no indication is given to return to the original steps.

- The instructions are less detailed. The general goal is listed and the details are either provided in other section/appendices or not at all.

- Large amounts (4 pages) of introductory information may be confusing.

W5 Airline Engineering Order 1234	EO. NO.	
Title Page	PAGE **1** OF **153**	
TITLE **WINGS: RIB CHORD AT BL 70.5** **B727: INSPECTION/REPAIR & MODIFICTATION** **AD 90-06-09 AD 94-07-08 SB B727-57-0112**	ETOPS YES ☐ NO ☐ √	ENGINEERING RELEASE DATE **01-01-98** COMPONENT YES ☐ NO ☐ √

SUMMARY, 2.0 EFF., 3.0 AUTH., 4.0 TIMETABLE, 5.0 RESOURCES, 6.0 ACTIONS BY, 7.0 DRWS., 8.0 APPENDICIES, 9.0 ISSUE HISTORY

MAJOR ALTERATION ☐ MAJOR REPAIR ☐ MINOR ALTER./REPAIR ☐
OTHER ☐

(copy to FAA)

1.
SUMMARY:

During a major fatigue test of the B727 airplane, cracks were found in the upper vertical flange of
The wing-to body rib upper chord at B.S. 760. One crack was through the holes for the two aft Fasteners common to B.S. 760.95 frame attachment and the second crack was at the lower Fastener hole just aft of the frame attachment. This condition could lead to structure degradation And unscheduled maintenance downtime.

This E.O. is issued to inspect and modify the rib upper chord at BL 70.5. This inspection and Modification is the subject of FAA AD 94-07-08 and FAA AD 90-06-09.

2. EFFECTIVITY:

3. AUTHORIZATION:

A. FAA AD 90-06-09, Amendment 39-6488.

B. FAA AD 94-07-08, Amendment 39-8866.

C. Boeing SB B727-57-0112 Rev. 4, dated October 29, 1992.

D. Boeing Document D6-54860

E. UPS Aircraft Engineering.

4.
TIMETABLE:

A. Schedule initial inspection per Appendices B and C within 3,000 cycles from April 17, 1990,
But no later than 15 months after April 28, 1994.

B. Schedule repetitive inspections per Appendices B and C at 14,000 cycles intervals.

C. Schedule modification per Appendices F (L/H) and G (R/H) prior to accumulation of 60,000 cycles if not previously repaired per Appendices D (L/H) and E (R/H). Note that accomplishment of Appendices F or D on the left side and G or E on the right side constitute terminating action for repetitive inspection required by paragraphs 4.B, 4.F, and 4.G.

D. This TIMETABLE is FAA mandatory approved.

MATERIAL – THIS ISSUE **SEE 5.**	TOTAL-THIS ISSUE	APPROVED BY	WORK IN PROGRESS SUPPLEMENT ATTACHED ☐	WT & BAL, PERF. CHG. YES ☐ √ NO ☐
LABOR – THIS ISSUE **SEE 5.**	TOTAL – ALL ISSUES	APPROVED BY	APPROVED BY	ENGINEERING FILE NO. **33-22**
PREPARED BY	CHECKED BY	CHECKED BY	APPROVED BY	Rts

E. All aircraft previously repaired per Appendix 8.2 (L/H) and/or 8.4 (R/H) of issues prior to Revision C of this E.O. must be inspected per Appendix H (L/H) and/or I (R/H) respectively Within 3000 cycles since the accomplishment of 8.2 and/or 8.4.

F. Schedule repetitive inspections per Appendix B (L/H) and/or C (R/H) at 3500 cycles on all aircraft repaired per steps 8.1.3 (L/H), 8.1.4 (L/H), 8.3.3 (R/H), 8.3.4 (R/H), of issues prior to revision C of this E.O.

G. Schedule repetitive inspections per Appendix B (L/H) and/or C (R/H) at 35000 cycles on all Aircraft repaired per steps B (3) or C (3) of revision or later issues.

5. <u>RESOURCES:</u>

A. Labor: Inspection = 30 m/hrs per AC

Modification = 80 m/hrs per AC

A.
Material:

L/H mod. kit

R/H mod.
kit

hole rework
kit

L/H repair kit.

R/H repair
kit

L/H repair
kit

R/H repair
kit

Strap

Strap

6. ACTIONS BY:

A. Production Control

(1) Schedule the effective airplanes in paragraph 2. Per the TIMETABLE in paragraph 4.

(2) Accomplishment of Appendices D or F (L/H) and E or G (R/H) terminate repetitive inspections.

B. Aircraft Materials

(1) Purchase two (2) each of kit P/N's listed in Material List. Replenish stock as used up.

C. Aircraft Major Maintenance

(1) Ensure maintenance facility has a copy of Boeing drawings 654C33202 and 65-68492.

Drawings are available from Aircraft Engineering.

D. Aircraft Quality Control

(1) The modification and inspection outlined in this E.O. meets the requirements of FAA AD 90-06-09, Amendment 39-6488 and AD 94-07-08, Amendment 39-8866.

E. Performance Engineering

(1) Repairs and preventive modifications per this E.O. are less than ten pounds and Therefore have negligible effect on weight and balance.

F. Aircraft Records

(1) Notify Production Control to schedule repetitive inspections per paragraph 4.G on all aircraft repaired per steps B (3) on left side or C (3) on the right side.

(2) Research records to identify all aircraft repaired per Appendices 8.2 and 8.4 of previous issues of this E.O. and notify Production Control to schedule Appendix H and/or I per paragraph 4.E.

(3) Research records to identify all aircraft repaired in accordance with steps 8.1.3, 8.1.4, 8.3.4 or 8.3.4 of issues prior to revision C of this E.O. and notify Production Control to schedule repetitive inspections per paragraph 4.F.

(4) Put all aircraft on the forecast that require the inital and repetitive inspections in accordance with paragraph 4.0 TIMETABLE. Modification in accordance with Appendices F or D on the left side and G or E on the right side constitute terminating action for these inspections.

7. DRAWINGS:

Boeing drawing nos. 65-68492 and 65C33202.

8. APPENDICES:

Materials List …….… 1 page (s)

A. Inspection of Wing Rib Upper Chord at BS 70.5, LH …….. 8 page (s)

B. Inspection of Wing Rib Upper Chord at BS 70.5, RH…….. 8 page (s)

C. Large Repair - Left Chord …… 31 page (s)

D. Large Repair - Right Chord ……..… 30 page (s)

E. Preventive Modification - Left Chord …….. 30 page (s)

F. Preventive Modification - Right Chord ……..…….. 30 page (s)

G. Inspection for Repair Strap at BS 760.95 Frame-Left Side ……4 page (s)

H. Inspection for Repair Strap at BS 760.95 Frame-Right Side ……...6 page (s)

9. ISSUE HISTORY:

A. Issue “A” release date: 01/01/96

B. Issue “B” release date: 01/01/97

(1) Summary: The revision “B” adds aircraft XXX-XXX and YYY-YYY to the EFFECTIVITY and the E.O. format has been changed to the new format. Pages 1, 2, 6, 7, 10, 13, 14, 15, 16, 19, 22, and 23 have been revised. Added page 4a.

(2) Retroactivity: None

C. Issue “C” release date 12/22/92

(1) Summary: The revision "C" incorporates revision 4 of LL 727-11-2222, which is a complete revision requiring additional work on aircraft modified by earlier issues.

(2) Retroactivity: Aircraft repaired per Appendix 8.2 and/or 8.4 of prior issues require additional work in accordance with Appendix H and/or I of this revision (see paragraph repetitive inspections per paragraph 4.F.

D. Issue "D" release date: 04/09/93

(1) Summary: This revision "D" incorporates SB 727-99-0000 LMN which revises the repetitive inspection interval from 3000 to 3500 flight cycles. The revision also corrects kit part numbers in the Material Lists.

(2) Retroactiviy:
None

E. Issue "E" release date: 01/31/94

(1) Summary: This revision "E" adds aircraft ABCD-LMNO to the EFFECTIVITY.

(2) Retroactivity: None

F. Issue "F" release date: 05-13-94

(1) Summary: This revision "F" adds aircraft 7895A to the EFFECTIVITY.

(2) Retroactivity: None

G. Issue "G" release date: 04-26-95

(1) Summary: This revision "G" is issued to revise Appendix A, Material List to reflect the
latest Repair / Modification Kit Part Numbers.

(2) Retroactivity: None

H. Issue "H" release date: 07-16-96

(1) Summary: This revision "H" is issued to revise Appendices D, E, F, G, H, I, to reflect the latest Repair / Modification Kit Part Numbers per the latest repair drawing 65C33202.

(2) Retroactivity: None

Inspection of Wing Rib Upper Chord at BL 70-5, L/H	MECH.	INSP.
(1) Remove floor panels, interior access panels, B.S. 740 740 through 783 Pressure seal and wing-to-body fairing as necessary to gain access to inspection area. See Figure 1.		
◯1. Remove and discard existing fasteners (6 places).		
◯2. Accomplish eddy current inspection of fastener holes in locations Shown per 727 NDT Manual, D6-48875, Part 6, Subject 51-00-00, Figures 1 and 4. **Condition Found –** **Cracks:** **YES:**_____ **NO:**_____		
◯3. Accomplish close visual inspection for cracks along the radius of the upper rib chord. **Condition Found –** **Cracks:** **YES:**_____ **NO:**_____		

(2) If no cracks are found, accomplish Section 1, fastener hole rework.		
(3) If cracks are found that are no longer than one inch and do not go Into the horizontal flange, accomplish repairs per drawing 65-68492-17.		
Generate non-routines to signoff repairs.		
(4) If cracks are found that exceed one inch in total length, but do not Extend aft of B.S. 766 or go into the horizontal flange, accomplish Appendix F – Preventive Modification. See Section 2 of this Appendix for clarification.		

(CON'T)	**MECH.**	**INSP.**
(5) If cracks are found that extent aft of B.S. 766, but do not extend aft of B.S. 775.5 or go into the horizontal flange, accomplish repairs per Appendix D. See Section 2 of this Appendix for clarification.		
(6) If cracks are found that extend aft of B.S. 775.5, or do go into the Horizontal flange, contact on-site Aircraft Engineering.		
(7) Re-install floor panels, access panels, pressure seals, and wing-to-body fairings removed for access.		
(8) Restore airplane to normal configuration.		

THE SIGNING OF THIS ITEM VERIFIES COMPLETION OF EACH WORKSTEP SIGN-OFF BLOCK AND CONSTITUES A SINGLE ITEM AIRWORTHINESS CONTINUATION FOR THIS APPENDIX. AIRCRAFT REGISTRATION NO. _____ STATION_____ ENGINE SERIAL NO./POSITION _____ DATE_____		

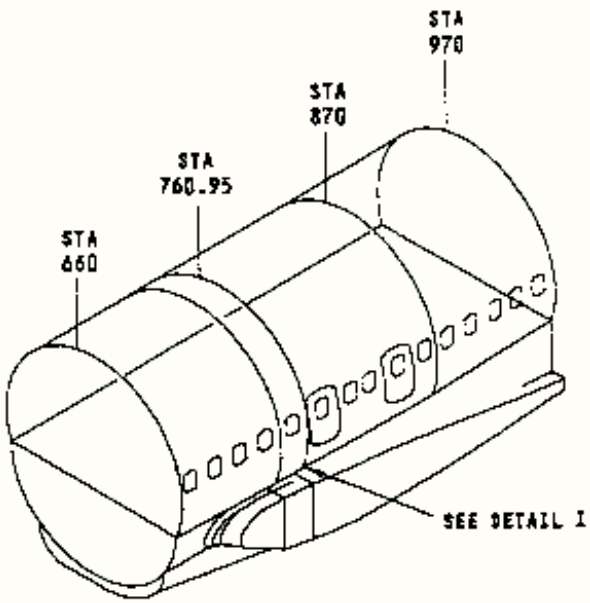

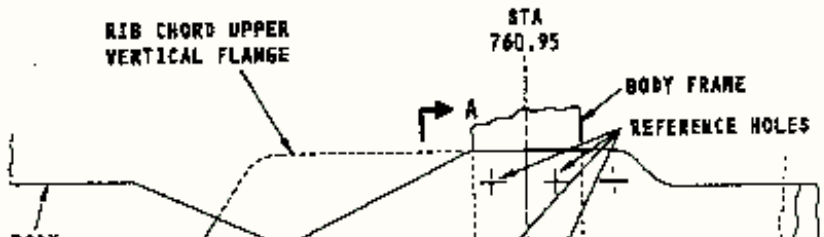

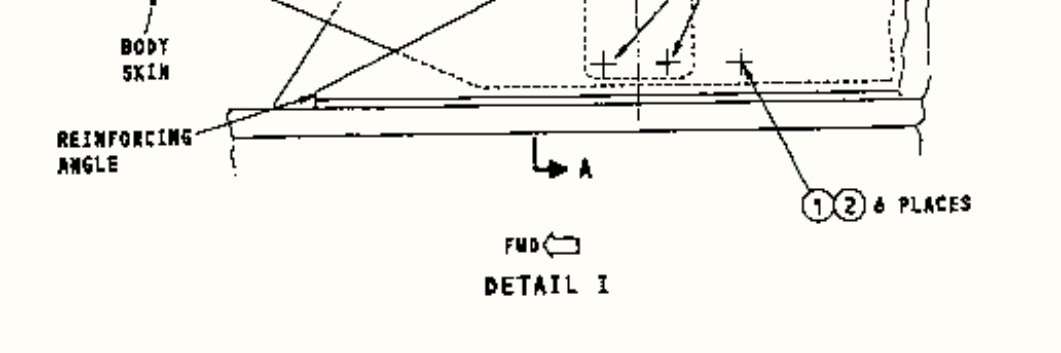

FIGURE 1. INSPECTION

SHEET 1 OF 2

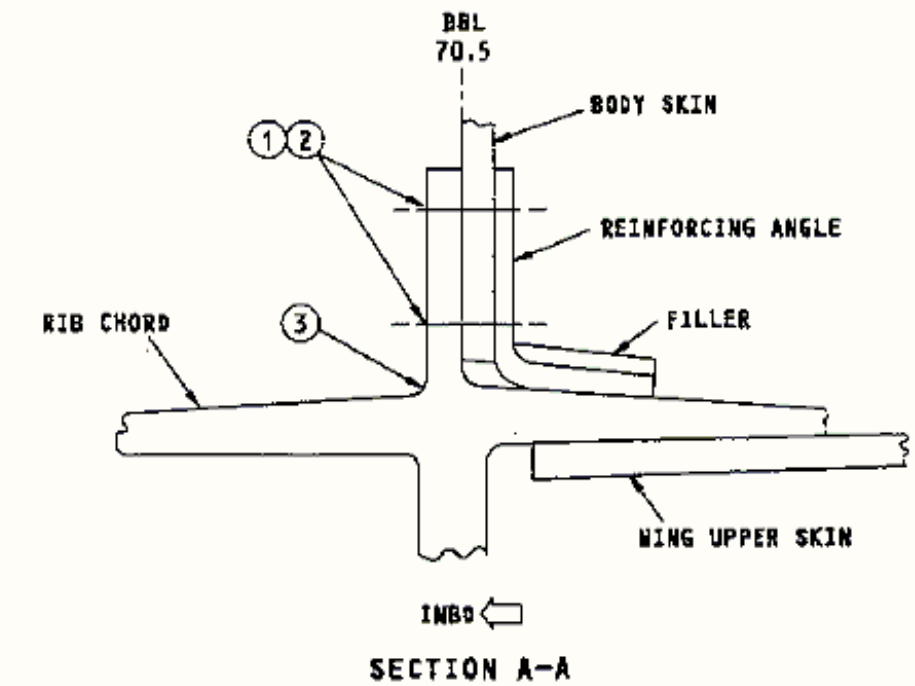

FIGURE 1. INSPECTION

SHEET 2 OF 2

(CON'T) SECTION I Fastener Hole Rework – See Figure 2	MECH.	INSP.
NOTE: If holes have been previously reworked as indicated by enlarged hole sizes and/or hardware removed, N/A and install new fasteners per ◯2 ◯1. Enlarge holes indicated to 0.3055 (+0.0030 or –0.000) inch diameter. Cold work holes per 727 SRM Subject 51-30-10 low interference cold working process, to a final hole size of 0.309 (+0.004 or –0.000) inch diameter.		
◯2. Install the fasteners given below: (a) Increase the counter sink diameter of the hole. Refer to the 727 SRM Subject 11-00-2. Install bolt B1556 as necessary, and the collar C7667. (a) Install the bolt or B1898 as necessary to agree with the structure and the collar B1234. If a bolt B9876 is installed increases the countersink diameter of the hole.		

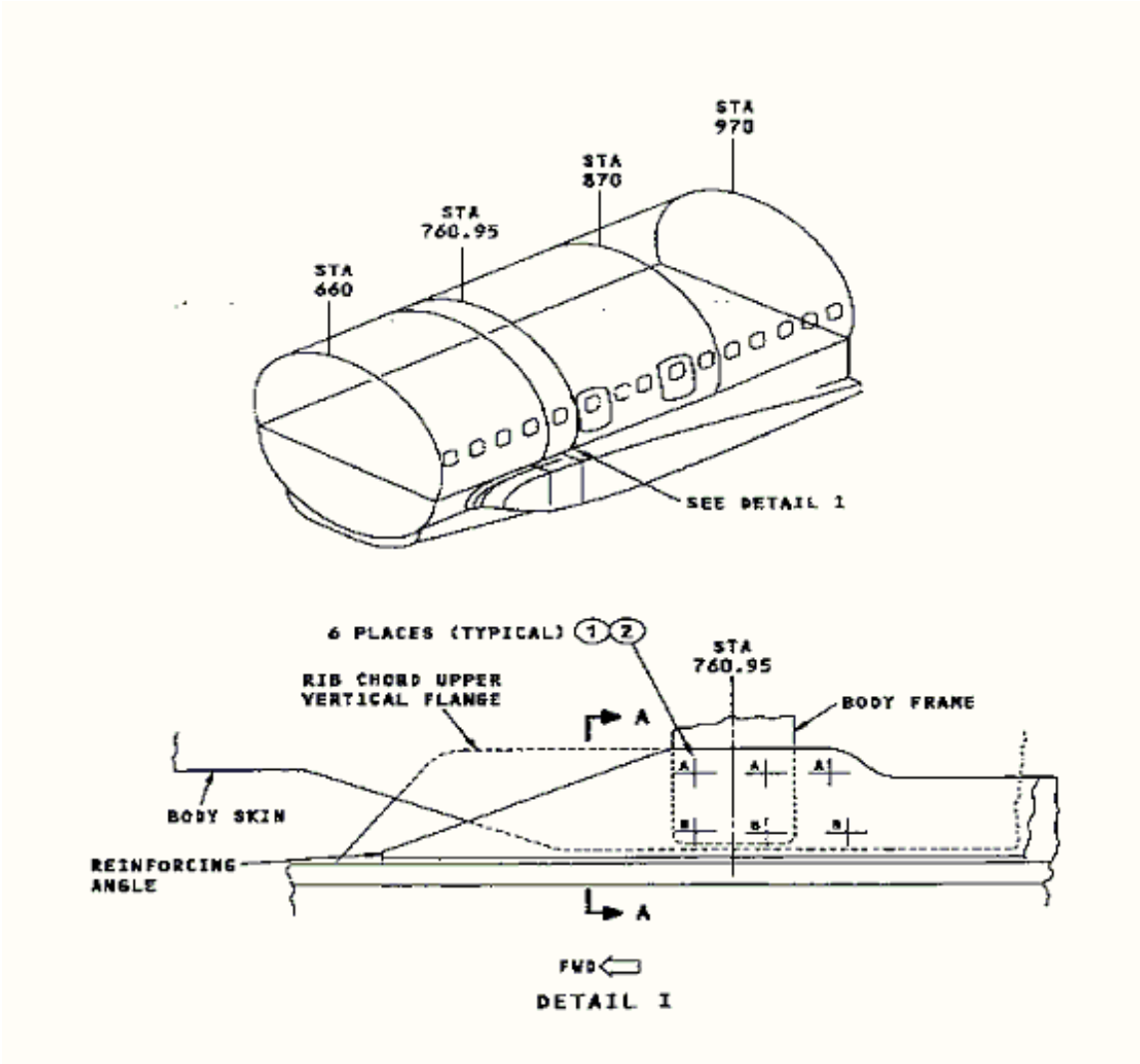

FIGURE 2. COLD WORKING

SHEET 1 OF 2

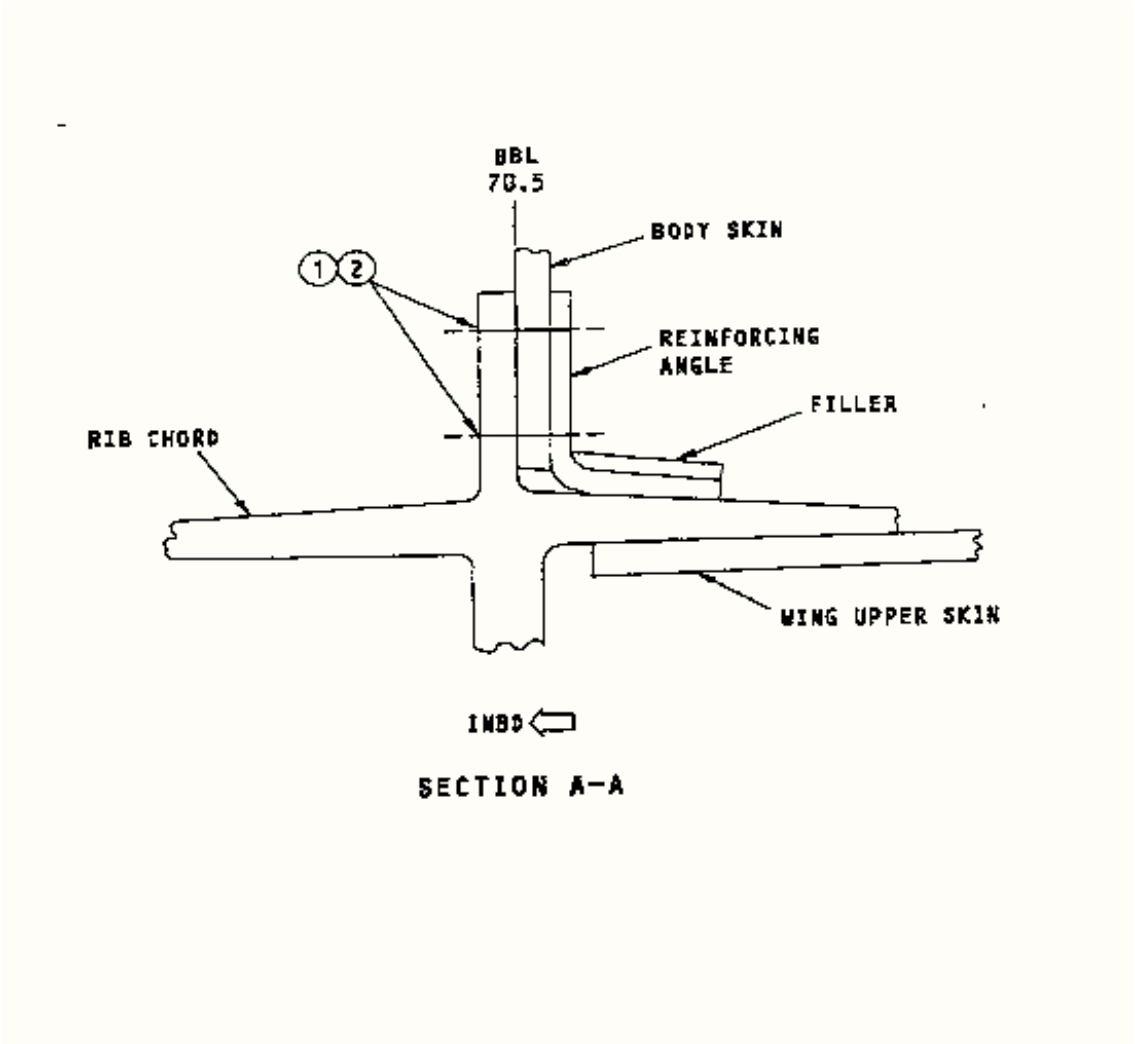

FIGURE 2. COLD WORKING

SHEET 2 OF 2

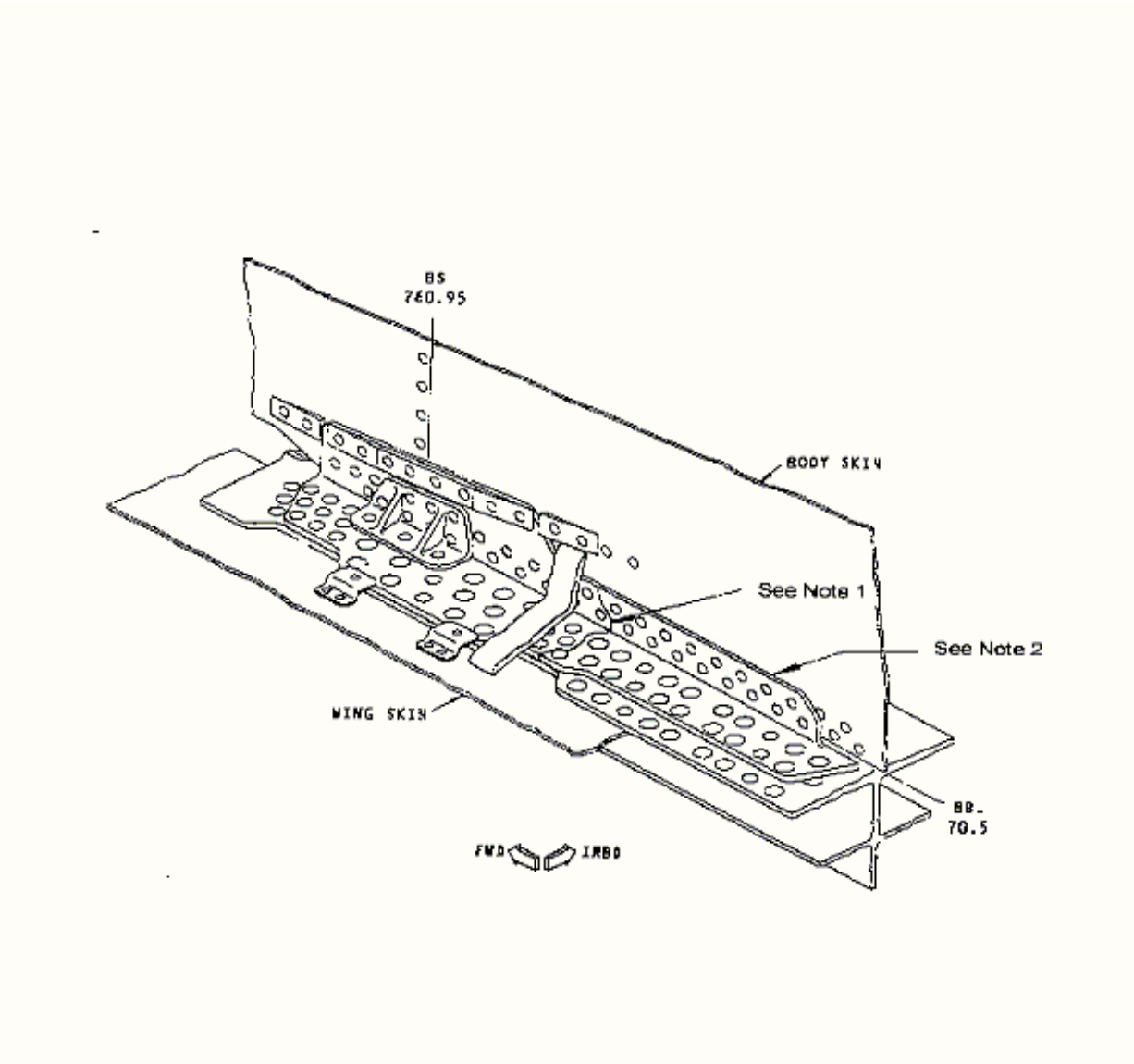

L/H Shown

R/H Opposite

NOTES:

1. If cracks greater than 1.0 inch long do not extend aft of B.S. 766 or go into the horizontal flange, repair per Appendix F.

2. If cracks grater than 1.0 inch long extend aft of B.S. 766 but do not extend aft of B.S. 775.5 or go into the horizontal flange, repair per Appendix D.

3. If cracks greater than 1.0 inch extend aft of B.S. 775.5 or go into the horizontal flange contact
Aircraft Engineering.

FIGURE 2. COLD WORKING

SHEET 2 OF 2

A.6 WING INSPECTION – AIRLINE 4

A.6.1 Readability Score

Flesh-Kincade Score:
36.6

Grade Level:
9.4

A.6.2 Observed Problems

- The workcard's design makes the user jump back and forth within the card. Specifically, section III step 1c on page 4 refers you back to step section II step 3 b,c, and d.

- The signoff boxes which are not needed should be removed instead of labeled with "Not Req'd."

- On page five, you must enter information in the center of the instruction text. This can be easily missed. It should be moved off to the side where the signoffs are located.

- There are many references to the Maintenance Manuals. Jumping to various sources, could be conducive to errors such as forgetting to finish the procedures/signoffs of the original card.

- If the chord has been previously repaired and no cracks were detected, no instructions are given (a “dead end”).

- In the titles and notes, in place of all capital letters, bold should be used for emphasis.

- There is only one signoff for multiple steps (step 1).

- There is no indication of which work was completed since there is only one signoff block for a section that offers the mechanic a choice of work based on the inspection findings.

A.7 WING INSPECTION – AIRLINE 6

A.7.1 Readability Score

Flesh-Kincade Score:
81.4

Grade Level:
2.6

A.7.2 Observed Problems

- The workcard should not be written in all capital letters. It is difficult to read and reduces reading speed.

- The close spacing makes reading the workcard more difficult.

- On pages one and two, you must enter information in the center of the instruction text. This can be easily missed. It should be moved off to the side where the signoffs are located.

- The left hand and right hand wings are included together. It would be easier for one wing to be completed before the other side is started. Therefore, the workcard should be written to reflect this sequence.

- There are references to maintenance manuals and diagram pages. Jumping to various sources, could be conducive to errors such as forgetting to finish the procedures/ signoffs of the original card.

- The warning should be written in bold as to add emphasis and reduce the chances of being missed.

- The sign-off lines are dotted which may be difficult to see. This may increase the chances that one may be missed. They should be boxes placed on the left hand side. In addition, it is difficult to match particular steps. The code used to indicate who should sign each line is confusing.

- The page breaks are done in the middle of steps and even in the middle of sentences. The page layout should be changed as to keep the steps together.

- On a positive note, this workcard provides an excellent means to track “open” work, by including it directly on the workcard. It makes it easier for others to follow.

PLANE NO. Job Instruction Card SKILL CREW ZONE PHASE JOB NO. JOB SEQ NO.

9876-56-45 WING-RIB UPR CHD @ BL70.5-RWK

11		230	RW	21212	
		ABC 12345			

88.0 262 REF **00-213**

INSP. ACCOM. BY **EFF. 727 HMV** COA. NO. COST **ATA** NO **11-00 456**

O. GENERAL NOTES-

A.THIS J/C SATISFIES THE INTENT OF AD 94-07-08.

B.THIS J/C REMOVES FASTENERS, COLD WORKS THE FASTENER HOLES AND INSTALLS OVERSIZE HI-LOKS.

1. TOOLS, REFERENCES-

A. COLD WORKING TOOL KIT – LOC-737-33-2121-1 LOCATED IN THE A TOOL CRIB, SPOT K23 X. IN THE OAKL TOOL CRIB, AA 9-5656, SPOT LL91Z & UI 11-77, SPOT TJ9ED.

1. MANDREL-

A.AA-CWR-O3030-42-9A

2. SLEEVES-

B.YY8800-RCW-I39090-66-F

B. SRM 55-00-11

2. MATERIALS-

A.COM3333, 848-0081 ONE COAT CORR INHIBITOR

(PREFERRED RATHER THAN APPLICATION OF –1 & -2)
W...

3. REMOVE THE PRESSURE SEAL BOX SECTION FOR ACCESS LOCATED FWD. OF STA 760 (REF. PG. 1` OF DIAGRAM) L.

4. LEAD: CHECK TO DETERMINE AT BOTH LH AND RH SIDES

WHETHER CRACH REPAIR WAS PREVIOUSLY INSTALLED. IF PREVIOUSLY REPAIRED, BY EITHER SMALL REPAIR OR LARGE REPAIR “NO”FURTHER ACTION IS REQUIRED ON THAT SIDE. (FASTENER HOLE REWORK OR INSPCTION) INITIAL BELOW:

A. LEFT SIDE

1._____ "NOT" REPAIRED, CONTINUE J/C.

2._____ REPAIRED, DELETE LEFT SIDE REWORK AND

SIGN. CHECK	SIGN. CHECK

AIRFRAME MAINTENANCE DEPARTMENT

		STATUS OF ITEMS BUT NOT SIGNED OFF
NAME		
FILE NO.		
SHIFT/DATE		
NAME		
FILE NO.		
SHIFT/DATE		
.NAME		
FILE NO		
SHIFT/DATE		

PLANE NO. Job Instruction Card SKILL CREW ZONE PHASE JOB NO. JOB SEQ
NO.

9876-56-45 WING-RIB UPR CHD @ BL70.5-RWK

11		230	RW	21212	
		ABC 1234			

88.0 262 REF **00-213**

INSP. ACCOM. BY COA. NO. COST **ATA** NO **11-00 456**

INSPECTION
ITEMS.

B.RIGHT
SIDE

1._____ "NOT" REPAIRED, CONTINUE J/
C.

2._____ REPAIRED, DELETE RIGHT SIDE REWORK
AND

INSPECTION
ITEMS.

5.REMOVE 6 FASTENERS SHOWN ON ATTACHMENT (EACH
SIDE)

W... A.LEFT
SIDE

W... B.RIGHT SIDE

6.CONDUCT A CLOSE VISUAL INSPECTION OF THE UPPER
RIB

CHORD RADIUS FOR CRACKS (SEE ON INB’D
SIDE)

...I A.LH CHORD LIST W/U’S, IF NONE, SO
STATE

_____

...I B.RH CHORD LIST W/U’S, IF NONE, SO
STATE

_____

7.EDDY CURRENT THE OPEN HOLES PER 727 NONDESTRUCTIVE
TEST

MANUAL, D6-48875, PART6, SUBJECT 51-00-00 FIG’S 1 &
4

(REF DIAGRAM SYMBOL 1 – 6
PLACES)

. ...I A.LH CHORD LIST W/U’S, IF NONE, SO
STATE

_____

...I B.RH CHORD LIST W/U’S, IF NONE, SO
STATE

_____

L... 8.IF CRACKS ARE FOUND, PROCESS W/U’S TO REAM TO 0.281
AND

RE-EDDYCURRENT. IF CRACKS ARE REMOVED, NO REPAIR
IS

REQUIRED. IF CRACKS PERSIST, PROCESS W/U’S TO
REPAIR

PER MM/OV 70-57-12-03. CHECK FOR APPROPRIATE DWG. NO'S

AND INITIAL APPROPRIATE SIDE(S) ON SFOEG RECORD CARD.

PG 02 BAA 01-01-98

SIGN. CHECK SIGN. CHECK

W6 AIRLINES

AIRFRAME MAINTENANCE DEPARTMENT

STATUS OF ITEMS BUT NOT SIGNED OFF

NAME		
FILE NO.		
SHIFT/DATE		
NAME		
FILE NO.		
SHIFT/DATE		

NAME		
FILE NO		
SHIFT/DATE		

PLANE NO. Job Instruction Card SKILL CREW ZONE PHASE JOB NO. JOB SEQ NO.

9876-56-45 WING-RIB UPR CHD @ BL70.5-RWK

11		230	RW	21212	
		ABC 1234			

88.0 262 REF **00-213**

INSP. ACCOM. BY COA. NO. COST **ATA** NO **53-00 456**

HAVE ANALYST DELETE REWORK ON SIDES REQUIRING REPAIR IN

ITEMS 9 & 10 AND ISSUE SNR CARDS 23284 THRU 23288 (LH)

AND/OR 23232 THRU 291189 (RH)

F... 9.IF 5/16 FASTENERS ARE INSTALLED, DELETE ITEMS 10 & 11.

NOTE:IF 5/16 INCH FASTENERS ARE INSTALLED, OMIT

FASTENER HOLE REWORK.

10.CLEARANCE TO REAM AND COLD WORK HOLES PROVIDING NO

CRACKS WERE INDICATED OR CLEANED UP AFTER REAMING TO

0.281 INCH DIA.

...I A.LEFT SIDE

...I B.RIGHT SIDE

11.REAM HOLES TO 0.3085 AND DEBURR BEFORE COLD WORK.

COLD WORK HOLES, FINISHED SIZE TO BE 0.3090 (+0.004 OR

-0.000) (REF SRM 51-30-10 “LOW INTERFERENCE”)

...CW... A.LEFT SIDE

...CW... B.RIGHT SIDE

12.INSTALL HI-LOKS PER APPLICABLE CODE ON DIAGRAM

...IW... A.LEFT
SIDE

...IW... B.RIGHT
SIDE

W... 13.RESTORE COM3030-3 CORROSION INHIBITOR AT REWORKED AREAS

WARNING-FOLLOW STANDARD DOCK CORROSION
INHIBITING

COMPOUND SAFETY PROCEDURES

14.REINSTALL AND SEAL PRESSURE SEAL BOX SECTION
REMOVED

FOR ACCESS FWD OF STA 760. (REF. PG. 1 OF
DIAGRAM)

NOTE:1) VERIFY ALL ITEMS PREVIOUS TO THIS ONE REQUIRING

SIGN.
CHECK

SIGN. CHECK

W6 AIRLINES

AIRFRAME MAINTENANCE DEPARTMENT

		STATUS OF ITEMS BUT NOT SIGNED OFF
NAME		
FILE NO.		
SHIFT/DATE		
NAME		
FILE NO.		
SHIFT/DATE		
NAME		
FILE NO.		
SHIFT/DATE		

PLANE NO. Job Instruction Card SKILL CREW ZONE PHASE JOB NO. JOB SEQ
NO.

9876-56-45 WING-RIB UPR CHD @ BL70.5-RWK

11		230	RW	21212	
		ABC 1234			

88.0 262 REF **00-213**

INSP. ACCOM. BY COA. NO. COST **ATA** NO **53-00 456**

INSPECTION BUY BACK HAVE BEEN
SOLD.

2) RESTORE SEALANT APPLICATION

...IW... A. W...
LH

...IW... B. W... RH

D... 15.DOCK ANALYST-CHECK FOR CONPLETION OF ALL ENTRIES
ABOVE

D... 16.DETACH AND ROUTE RECORD CARD TO XX210 IF REPAIR
(S)

WERE REQUIRED, OTHERWISE DESTROY RECORD CARD.