CAGE Code 4JTK8

CLEEN Oxide Ceramic Matrix Composite Exhaust Public Final Report

DOCUMENT NUMBER:	RELEASE/REVISION:	RELEASE/REVISION DATE:
D6-85091-04	NEW	December 14, 2015 For Document Release Use

FAA Continuous Lower Energy, Emissions and Noise (CLEEN) Technology Demonstration Program

OTA #: DTFAWA-10-C-00030

CONTENT OWNER:

Structural Technologies (9M-PW)

All revisions to this document must be approved by the content owner before release.

Approved for Public Release

Copyright © 2015 Boeing. All rights reserved.

Document Information

Original Release Date	Contract or CDRL Number (if required)
Dec 14, 2015	OTA DTFAWA-10-C-00030
Approved for Public Release	

Authorization for Release

AUTHORS**:**

Benson Black, Ronen Elkoby, Craig Frankel, William Keith, Leanne Lehman, Eric Nesbitt, Miklos Petervary, Thomas Pinney

CONCURRENCE:	Signature on File	9M-PW-EGBQ	Dec 14, 2015
	Craig Frankel - Project Lead	Org. Number	Date
CONCURRENCE:	Signature on File	9M-PW-EGDQ	Dec 14, 2015
	William Keith - Analysis Lead	Org. Number	Date
CONCURRENCE:	Signature on File	9M-MP-EYBC	Dec 14, 2015
	Leanne Lehman - M&P Lead	Org. Number	Date
CONCURRENCE:	Signature on File	66-CB-B370	Dec 14, 2015
	Eric Nesbitt - Acoustics Lead	Org. Number	Date
CONCURRENCE:	Signature on File	9M-PW-EGBQ	Dec 14, 2015
	Thomas Pinney - Design Lead	Org. Number	Date
CONCURRENCE:	Signature on File	66-CP-PCN8	Dec 14, 2015
	Robert Wright - BCA Propulsion	Org. Number	Date
APPROVAL:	Signature on File	9M-PW-EGBQ	Dec 14, 2015
	Miklos Petervary - Principal Investigator	Org. Number	Date
APPROVAL:	Signature on File	9M-PW-ECBY	Dec 14, 2015
	Craig Wilsey - Program Manager	Org. Number	Date
DOCUMENT RELEASE:		9M-ST-EUB0	Dec 14, 2015
		Org. Number	Date

RROI 15-00999-EOT

Approved for Public Release. Copyright © 2015 Boeing. All rights reserved.

Table of Contents

TABLE OF CONTENTS 3

LIST OF TABLES 4

LIST OF FIGURES 5

1.0 EXECUTIVE SUMMARY 6

2.0 INTRODUCTION 7

3.0 CMC TECHNOLOGY OVERVIEW 8

4.0 CMC NOZZLE PROJECT OVERVIEW 11
4.1 CLEEN OVERVIEW 11
4.2 OXIDE CMC NOZZLE PROJECT OVERVIEW 13
4.3 CMC EXHAUST SYSTEM DESIGN OVERVIEW 13
4.4 PARTNERS AND SUPPLIERS 15
4.5 CMC TECHNICAL RISK MANAGEMENT 15

5.0 TECHNOLOGY MATURATION 16
5.1 BUILDING BLOCK APPROACH 16
5.2 SUBSCALE TESTING 17
5.2.1 Forward Joint Element 17
5.2.2 Cylinder Test 18
5.2.3 Subcomponent Test 18
5.3 GROUND TEST DEMONSTRATION 19
5.4 FLIGHT-TEST DEMONSTRATION 20
5.4.1 Acoustic Measurements, Analysis and Predictions 21
5.5 DESIGN CYCLE 2 22
5.6 TECHNOLOGY TRANSITION 22

6.0 TECHNOLOGY ASSESSMENT 24
6.1 TECHNOLOGY DEMONSTRATIONS 24
6.2 TECHNICAL PERFORMANCE METRICS 24
6.3 SYSTEM LEVEL MODELING 24
6.4 BENEFITS ASSESSMENT 26

7.0 SUMMARY 28

ACRONYM LIST 29

Approved for Public Release. Copyright © 2015 Boeing. All rights reserved.

List of Tables

Table 6-1 – Horsepower and Bleed Modeling Inputs for Conventional and Electric Engines 25
Table 6-2 – System-Level Model Turbine Noise (EPNdB) for Various OPR 26

Approved for Public Release. Copyright © 2015 Boeing. All rights reserved.

List of Figures

Figure 3-1 – Trend of Increasing Engine Exhaust Gas Temperatures for Various Boeing Aircraft Engines 8
Figure 3-2 – Potential Application of CMCs to Commercial Nacelle Systems, Auxiliary Power Systems, and Exhaust Washed Airframe Structures 9
Figure 3-3 – Boeing's Ongoing Interest in Ceramics and Ceramic Composites Span Commercial and Defense Businesses 10
Figure 4-1 – Overview of Boeing CLEEN Program 12
Figure 4-2 – CLEEN CMC Nozzle Work Breakdown Structure 13
Figure 4-3 – Isometric View of CMC Exhaust System 14
Figure 4-4 – Section View of CMC Exhaust System, Features, and Surrounding Engine Hardware 14
Figure 5-1 – Building Block Approach Incrementally Reduces Risk Through Progression of Test Complexity 16
Figure 5-2 – Forward Joint Element Test 17
Figure 5-3 – CMC Cylinder 18
Figure 5-4 – Subcomponent Test in Dynamics Lab in Huntington Beach, CA 18
Figure 5-5 – Nozzle and Centerbody CMC Shells 19
Figure 5-6 – CMC Exhaust on T1000 Engine at NASA Stennis Rolls-Royce Test Pad 19
Figure 5-7 – CMC Ground Test Summary 20
Figure 5-8 – Summary of CMC Flight-Test Demonstration 21
Figure 5-9 – Expected Community Noise Benefit for Conventional Titanium and CMC Exhausts 22
Figure 5-10 – Boeing Skyline of Products and New Airplane Market Studies 23
Figure 6-1 – Temperature Limits for Metals and CMC 25
Figure 6-2 – Fuel-Burn Deltas for Baseline and MEA 26

Approved for Public Release. Copyright © 2015 Boeing. All rights reserved.

1.0 Executive Summary

The Continuous Lower Energy Emissions and Noise (CLEEN) Oxide Ceramic Matrix Composite (CMC) Exhaust Public Final Report highlights work performed to mature CMC exhaust technology under government industry partnership Other Transaction Agreement (OTA) DTFAWA-10-C-00030 from July 2010 through 2015. The report documents the building block approach used to incrementally reduce risk to enable technology readiness level 7 (TRL7) flight testing. This report also discusses the benefits of FAA CLEEN environmental objectives to reduce fuel consumption, emissions, and community noise. In addition, the report notes lessons learned that were incorporated in a second-generation exhaust design to accelerate the technology toward fleet adoption.

Key words: Ceramic Matrix Composite, CMC, Nozzle, Centerbody, Exhaust, FAA, CLEEN, Community Noise

Approved for Public Release. Copyright © 2015 Boeing. All rights reserved.

2.0 Introduction

In 2009, the FAA issued a request for proposal (RFP) for industry to partner on environmentally progressive aviation technologies. In June 2010, the FAA provided Boeing authority to proceed (ATP) to mature three technologies under CLEEN OTA DTFAWA-10-C-00030: Oxide-Oxide Ceramic Matrix Composite (CMC) Nozzle, Advanced Trailing Edges, and Biofuels. This report documents work performed to accelerate CMC Nozzle technology through 2015. Insight on the other technologies and a summary of Boeing's overall efforts are available in the FAA CLEEN Program Public Final Report.

CMC Nozzle endeavors under the FAA CLEEN Program accelerated maturation of CMCs for primary exhaust applications to provide lighter and quieter alternatives to metallic components that are limited by increasing engine exhaust temperatures, resulting in significant reductions in fuel consumption, CO_2 emissions, and community noise.

Efforts under CLEEN involved scaling-up CMC exhaust technology from an FAA/NASA TRL4 to TRL7 through a building block approach. The work included two design cycles. The first design cycle culminated in a hot-fire ground test and refurbishment for flight test of an oxide CMC primary nozzle and centerbody. The second design cycle, referred to as Design Cycle 2 (DC2), incorporated lessons learned to position the technology for transition to future aircraft. Both design cycles were anchored in coupon and element testing to reduce risk as the technology matured.

Boeing worked with the FAA and Georgia Institute of Technology (Georgia Tech), as well as industry partners Rolls-Royce, ATK-COIC, and Albany Engineered Composites (AEC) to advance CMC exhaust technology under CLEEN. Boeing also engaged several subcontractors to obtain materials, instrumentation, and metallic interface hardware.

The contents of this report were presented at annual CLEEN public consortiums.

Approved for Public Release. Copyright © 2015 Boeing. All rights reserved.

3.0 CMC Technology Overview

Increasing community noise restrictions and the pursuit of hotter, more efficient engines have effectively pushed current state-of-the-art (SOA) nacelle materials and structures to their performance limits. Figure 3-1 shows the trend of rising exhaust gas temperature over time for various engines used on Boeing aircraft. Today's modern engines are challenging the capability of titanium for use in acoustically treated primary exhaust nozzles. Alternatives include the use of superalloys that provide additional operating temperature margin but at the expense of up to 30% more weight. CMCs provide an enabling alternative. By virtue of their high specific strength and low weight coupled with high temperature performance, they exceed the performance of metals particularly when looking at temperatures above 1,300°F. CMCs become an enabler to providing acoustically treated high-temperature exhausts for future hotter, more efficient engines.

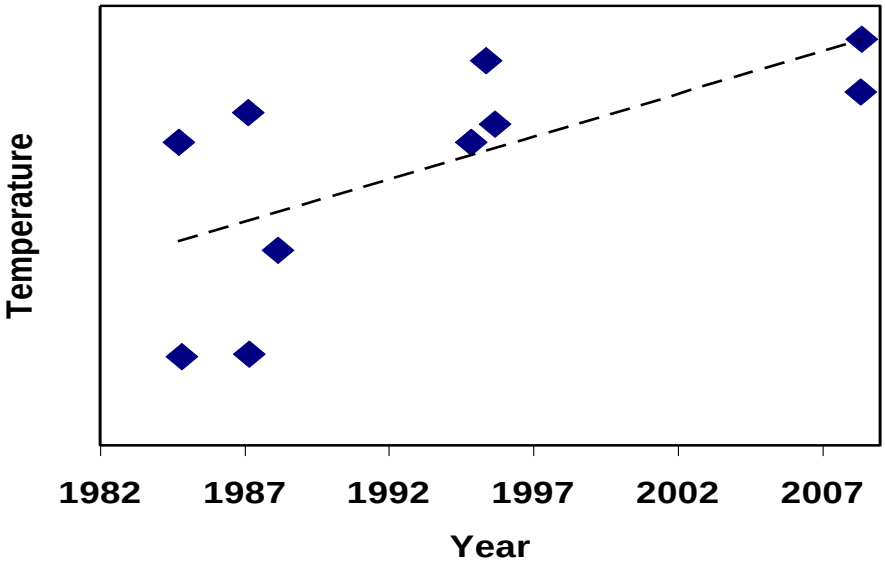

Figure 3-1 – Trend of Increasing Engine Exhaust Gas Temperatures for Various Boeing Aircraft Engines

CMCs are a composite material, similar to others like the familiar graphite/epoxy. The difference is that ceramic fibers reinforce a ceramic matrix rather than graphite fibers in an epoxy. The result is a ceramic material that is much tougher than traditional ceramics. The material behaves structurally more like wood than the familiar plate or tea cup, providing a viable structural material for high-temperature applications.

CMCs are generally categorized into two classes: non-oxides and oxides. Non-oxides are generally carbide or nitride ceramics. Examples include carbon fiber reinforced silicon carbide (C/SiC) and silicon carbide fiber reinforced silicon carbide (SiC/SiC). They are marked by high specific strength and stiffness with temperature performance beyond 2,400°F. However, as non-oxides, they are subject to oxidation at high temperatures in an oxidizing environment such as air. As such, they are utilized more frequently in the internal engine core, which generally runs fuel-rich (a reducing environment).

Approved for Public Release. Copyright © 2015 Boeing. All rights reserved.

The other class is oxide CMCs. These are ceramics that contain oxygen such as silica (SiO_2) and alumina (Al_2O_3). These materials are oxidatively stable in air at high temperatures because they are already oxidized and can therefore survive thousands of hours in extreme environment applications. Oxide CMC materials were selected for the primary exhaust for this reason. Specifically, the 3M Nextel 610 alumina fiber reinforcing an aluminosilicate matrix was selected for this application. It offered an off-the-shelf material form that best met the program's strength, environmental, and cost requirements. The form selected was a 2D composite laminated design, which can be fabricated in a manner similar to polymer matrix composites.

The engine selected for test in this program is the Rolls-Royce Trent 1000 engine, currently in service on the Boeing 787-8 and 787-9. This engine represents one of the most modern and efficient engines today, running at high operating temperatures and indicative of future engines to come. It also presented an ideal testbed for an acoustic liner evaluation. The Trent 1000 baseline utilizes an acoustically treated titanium exhaust. Through 787 development testing, the noise characteristics of the Trent 1000 were well characterized. This provided a clear baseline for comparison of the acoustically treated CLEEN Oxide CMC Nozzle.

Though focused on technology for oxide CMCs for primary exhaust applications, the program developed CMC data and experience facilitating ongoing trade studies for applications beyond the exhaust for commercial aircraft. These applications include other nacelle components, power systems, and exhaust washed airframe structures as shown in Figure 3-2. Figure 3-3 depicts Boeing's strong past and ongoing interest in ceramics and ceramic matrix composites.

- **Propulsion and auxiliary power unit engine systems**
- **Propulsion and power systems packaging**
- **Exhaust washed structures**

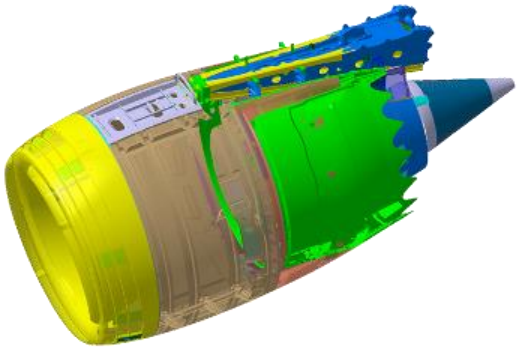

Figure 3-2 – Potential Application of CMCs to Commercial Nacelle Systems, Auxiliary Power Systems, and Exhaust Washed Airframe Structures

Approved for Public Release. Copyright © 2015 Boeing. All rights reserved.

Figure 3-3 – Boeing's Ongoing Interest in Ceramics and Ceramic Composites Span Commercial and Defense Businesses

CMC exhaust technology was successfully matured from FAA/NASA TRL4 to TRL7 flight testing through the building block approach described in section 5.0. Incremental building block progress, where design informed test needs and tests substantiated further scale-up, was fundamental to completing the work proposed under CLEEN. The results not only provided efficiencies for work under CLEEN, they position the technology for future fleet adoption, achieving CLEEN environmental objectives.

Boeing CLEEN technology maturation efforts also supported participation in working groups to update Volume 5 of the Composite Materials Handbook-17 (CMH-17) on CMCs. This handbook is expected to be an authoritative industry resource for technical information on composite materials and structures and will document industrywide best practices and standards to facilitate CMC certification and qualification.

Approved for Public Release. Copyright © 2015 Boeing. All rights reserved.

4.0 CMC Nozzle Project Overview

The following sections provide an overview of Boeing CMC Nozzle efforts under FAA CLEEN OTA DTFAWA-10-C-00030. The work was performed under a government and industry partnership that leveraged Boeing IRAD investments to accelerate ceramic matrix composite exhaust technology for environmental benefit. Additional CLEEN project-related information is available in FAA CLEEN Program Public Final Report D950-11492-2.

4.1 CLEEN Overview

Boeing proposed maturing Oxide-Oxide CMC Acoustic Nozzle technology in response to the FAA 2009 CLEEN competitive RFP. It was one of three technologies awarded to Boeing to pursue environmentally progressive technologies with industry partners. The objectives were to demonstrate and accelerate maturation of promising, energy efficient, clean, and quiet aircraft technologies.

Figure 4-1 shows the technologies advanced by Boeing under CLEEN. CLEEN CMC Nozzle efforts were performed between June 2010 and December 2015.

Approved for Public Release. Copyright © 2015 Boeing. All rights reserved.

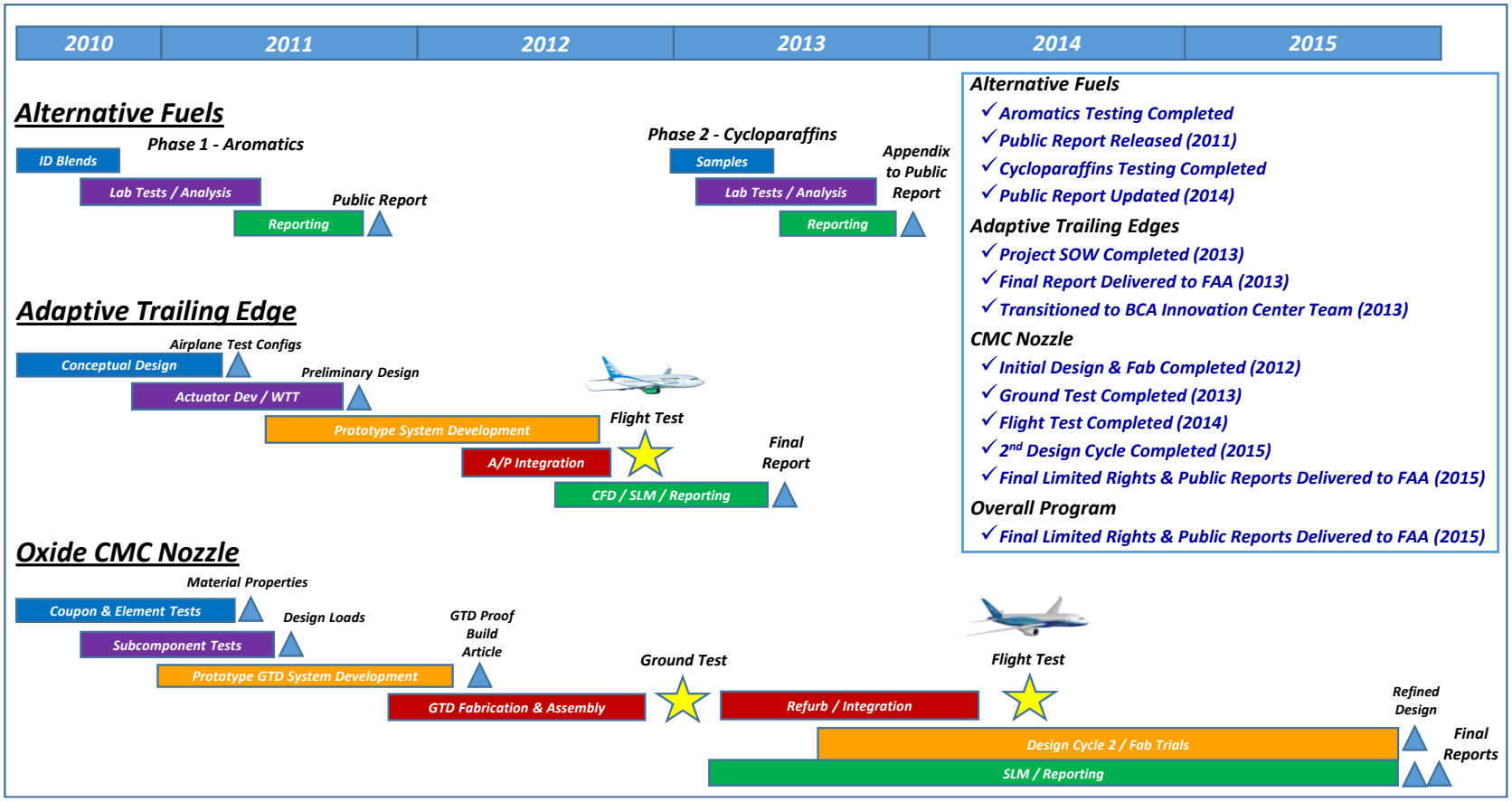

Figure 4-1 – Overview of Boeing CLEEN Program

Approved for Public Release. Copyright © 2015 Boeing. All rights reserved.

4.2 Oxide CMC Nozzle Project Overview

The Oxide CMC Nozzle project matured CMC exhaust technology from TRL4 to TRL7. The building block maturation approach described in section 5 was used to retire risk to accelerate the technology and to reduce risk for CLEEN project execution. The work included design and analysis informed by subscale and full-scale ground and flight testing to satisfy CLEEN objectives.

Integrated schedules with proactive earned value management were used to ensure the project was performed within cost and schedule constraints. The FAA received technical and programmatic status through monthly reports, at major reviews, and at CLEEN consortiums.

CMC Nozzle expenditures were collected according to the Work Breakdown Structure (WBS) shown in Figure 4-2. WBS elements 3.1 through 3.5 were established by the FAA's CLEEN RFP. WBS element 3.6 was added for best effort second-generation CMC exhaust maturation activities through a no-cost period of performance extension to further advance the technology. Additional CLEEN program WBS elements were employed to facilitate flight testing. Charge lines aligned with the WBS elements for earned value reporting and subtask codes were used to provide further fidelity to manage the project.

CMC Nozzle Work Breakdown Structure

WBS	Title	Work Element Description
WBS 3.1	Project Management	Management and integration including status reporting and risk management
WBS 3.2	Technology Maturation	Subscale fabrication and test, as well as fabrication and assy of full-scale nozzle and centerbody prototypes
WBS 3.3	Systems Engineering	Cross-functional design and analysis through flight test article refurbishment including major reviews
WBS 3.4	Technology Demonstration	Full-scale ground and flight test planning and execution
WBS 3.5	Technology Assessment	Ground and Flight Test assessments including System Level Modeling and reporting
WBS 3.6	Design Cycle 2	Second generation CMC exhaust detail design and analysis

Figure 4-2 – CLEEN CMC Nozzle Work Breakdown Structure

4.3 CMC Exhaust System Design Overview

The CLEEN Oxide CMC Nozzle project focused on accelerating technology to enable an exhaust system comprising a nozzle and centerbody. The following paragraphs provide an overview of the first-generation design CMC exhaust demonstrated during ground and flight testing on a Rolls-Royce Trent 1000 engine. The Trent 1000 best represents the thermal and acoustic exhaust environment of future aircraft. A second-generation design incorporating lessons learned from pathfinding activities, including flight test, is described in section 5.5.

The exhaust system creates an annular flow path for the hot engine core exhaust gases. The CMC technology demonstration centerbody and nozzle assemblies are similar in configuration. Both include a single-piece CMC shell. Each shell features an acoustic structural sandwich section (for noise abatement) transitioning to laminate. The centerbody assembly has a titanium aft cap mechanically fastened to the CMC. The aft

Approved for Public Release. Copyright © 2015 Boeing. All rights reserved.

cap provided a convenient inspection port during testing and simplified centerbody closeout. The nozzle assembly includes a nozzle fairing. The fairing provides an aerodynamic contour for cooler fan flow around the primary exhaust. It was titanium due to relatively low fan-flow temperatures and the availability of a retired test unit. Figure 4-3 shows an isometric view of the exhaust system model. Figure 4-4 shows a section view of the CMC exhaust and surrounding hardware.

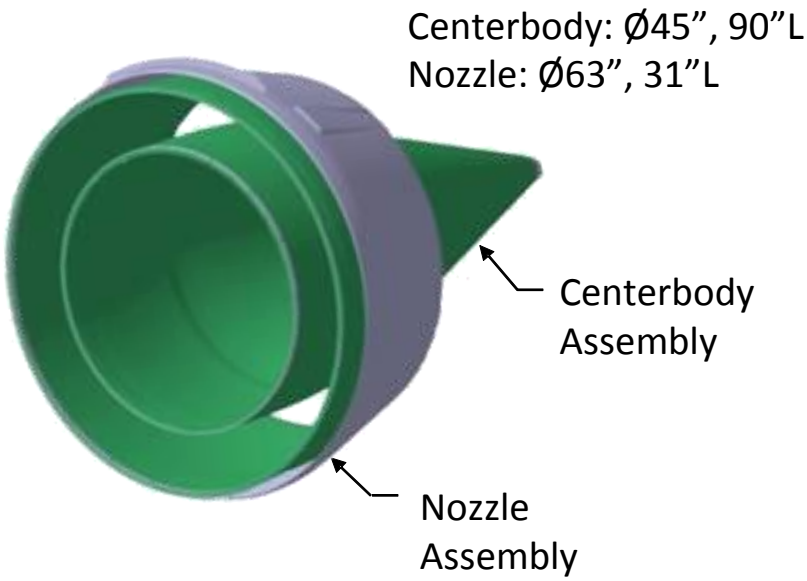

Figure 4-3 – Isometric View of CMC Exhaust System

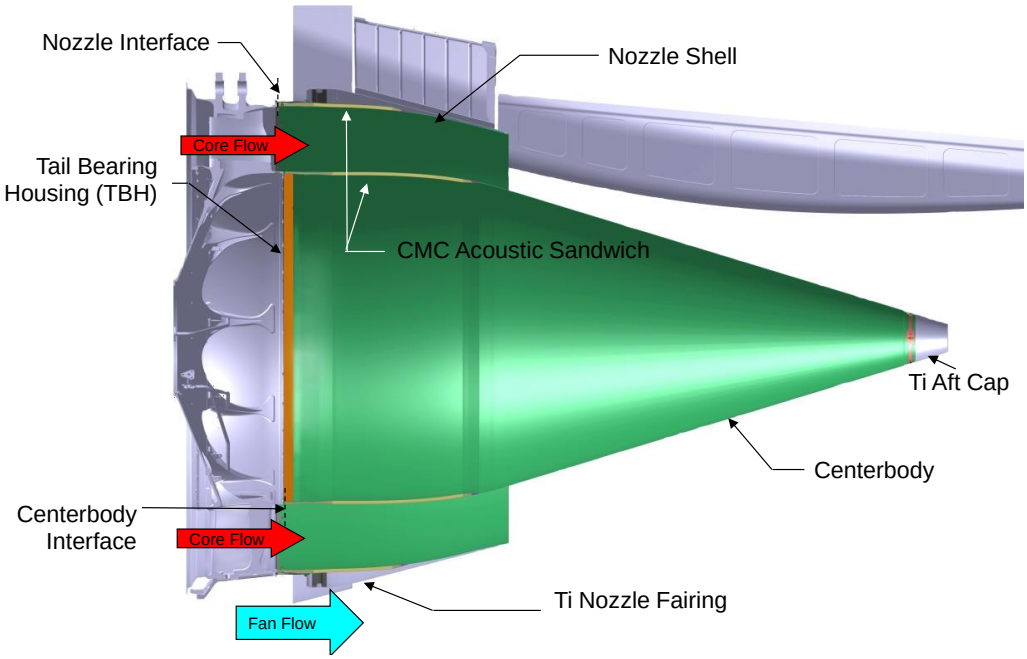

Figure 4-4 – Section View of CMC Exhaust System, Features, and Surrounding Engine Hardware

Approved for Public Release. Copyright © 2015 Boeing. All rights reserved.

4.4 Partners and Suppliers

Boeing Research & Technology (BR&T), Boeing Commercial Airplanes (BCA), and Boeing Test & Evaluation (BT&E) personnel contributed to CMC Nozzle technology maturation under CLEEN. BR&T led the effort, as well as performed design, analysis, materials and processing activities. BCA provided requirements for future aircraft as well as engineering personnel. BT&E performed subscale mechanical testing and flight testing, including obtaining community noise measurements. Boeing also engaged supplier partners, academia, and government agencies in a collaborative manner.

Key supplier partners were ATK-COIC, AEC, and Rolls-Royce. ATK-COIC and AEC provided in-kind services, as well as work performed under subcontract to Boeing. Rolls-Royce provided in-kind integration and resources. Boeing also subcontracted other hardware and testing services. In addition to the FAA, Boeing worked with the Air Force Research Laboratory (AFRL), NASA, and Georgia Tech.

4.5 CMC Technical Risk Management

Boeing proactively managed risk and opportunities associated with CLEEN CMC Nozzle technology maturation. Technical and programmatic risk items were identified and entered into the Boeing Opportunity, Risk, and Issue System (BORIS) for mitigation and tracking. This Boeing best practice addressed risks associated with technology maturation, as well as supported their reduction within CLEEN budget and schedule constraints.

The building block approach at the heart of risk reduction under CLEEN enabled the systemic advancement from fundamental validation to complex demonstrations, reducing technical risks. Further insight on technology maturation using a building block approach is provided in section 5.0. New technologies must be matured to a relatively low risk level to be considered for inclusion on airplane programs.

Approved for Public Release. Copyright © 2015 Boeing. All rights reserved.

5.0 Technology Maturation

The maturation of CMC technology for application into primary exhaust structures was achieved using a building block approach that included subscale testing, subcomponent testing in a simulated vibration environment, and full-scale engine ground and flight tests. Lessons learned from testing, in conjunction with maturity of design and analysis techniques and improved manufacturing, were incorporated into DC2, a second generation design.

5.1 Building Block Approach

A main tenet of the CLEEN program was to use a building block approach to incrementally reduce risk while raising the TRL with a progression of larger and more complex fabrication and tests (see Figure 5-1). Initial concept feasibility was supported by coupon testing that established basic physical and strength properties that enabled the assessment of preliminary designs. The data from these tests underpin trade studies and design maturity and provide substantiation for the assessment of structural margins. More complex element tests, generally defined by the integration of design features or complex loading, were conducted to assess particular features. A subcomponent vibration test representing the forward section of the centerbody was conducted to demonstrate fabrication at scale and the durability of the attachment concept in a relevant mechanical loading environment. Full-scale engine ground testing was conducted to further reduce risk and pave the way for a flight test that demonstrated CMC exhaust performance in the actual operating environment.

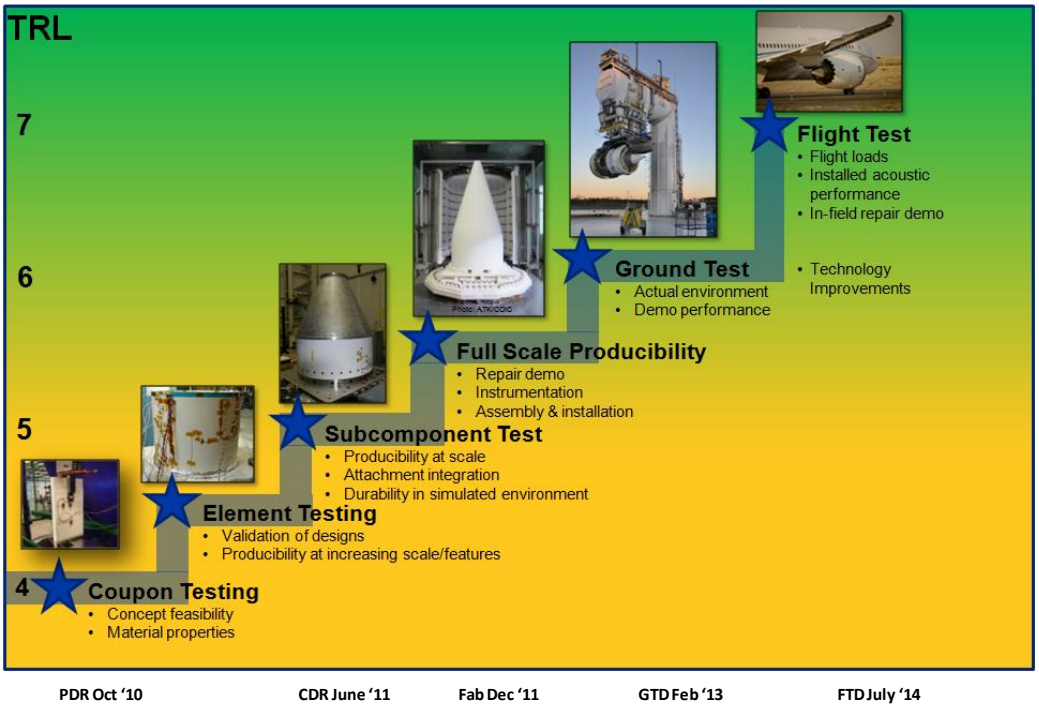

Figure 5-1 – Building Block Approach Incrementally Reduces Risk Through Progression of Test Complexity

Approved for Public Release. Copyright © 2015 Boeing. All rights reserved.

5.2 Subscale Testing

Extensive coupon, element, and subcomponent tests were conducted as part of the building block test program. These tests provided data on CMC structural and acoustic properties and design features to ensure the integrity of the design.

5.2.1 Forward Joint Element

An element test representing the forward joint in the centerbody was conducted to validate the design and improve understanding of the complex loading that occurs at the metal to CMC interface. This test article also served as a fabrication demonstration for the joint ramp and build-up area. Photographs of the test element and load fixtures are shown in Figure 5-2.

Figure 5-2 – Forward Joint Element Test

The assessment of the forward joint is challenging due to the interaction of combined shear forces and moments, preloading of the bushing and fastener through the thickness of the sandwich, and the non-linear behavior of the sandwich material. To address these challenges, a test element and corresponding test fixtures were designed to apply representative running forces and moments through a flat joint panel. Analyses were conducted on both the test geometry and the full-scale joint to verify that the forces and moments were reasonably matched.

Joint elements were tested to failure at room temperature and 1,000°F. The final element was fatigue tested at 1,000°F for 220,000 cycles at an accelerated-life load level, then loaded to failure in tension to demonstrate residual capability. The test results demonstrated twice the capability required.

Approved for Public Release. Copyright © 2015 Boeing. All rights reserved.

5.2.2 Cylinder Test

A cylinder element was designed to interrogate the ability of an early producibility demo to withstand stresses by imparting a temperature gradient that would load the structure in a fashion similar to the exhaust structure. The 24-in diameter test cylinder, shown in Figure 5-3, exceeded ultimate conditions, even with induced damage.

Figure 5-3 – CMC Cylinder

5.2.3 Subcomponent Test

The forward portion of the centerbody was fabricated and dynamically tested as a subcomponent to validate structural integrity. The article survived more than 100,000 hours of equivalent service life, as well as two fan-blade off shock load events followed by wind milling. The assembly, including a mass simulator of the aft portion of the centerbody, is shown in Figure 5-4.

Figure 5-4 – Subcomponent Test in Dynamics Lab in Huntington Beach, CA

Approved for Public Release. Copyright © 2015 Boeing. All rights reserved.

5.3 Ground Test Demonstration

A significant (TRL6) milestone toward validating the CMC primary exhaust system design was the completion of full-scale hot-fire testing of the acoustic nozzle (sleeve) and centerbody (plug) Ground Test Demonstrator (GTD) articles, which are shown in Figure 5-5.

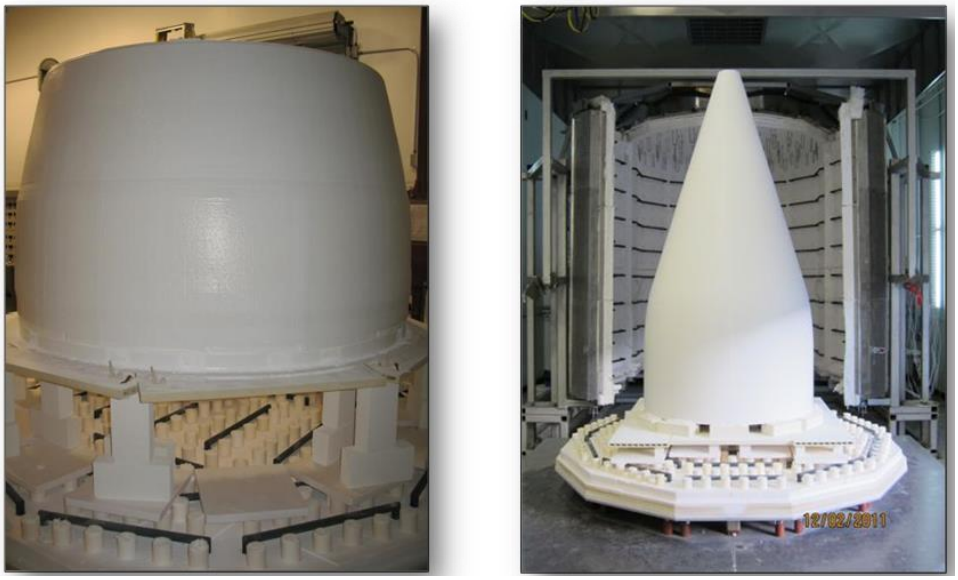

Images courtesy of ATK-COIC

Figure 5-5 – Nozzle and Centerbody CMC Shells

The ground test was conducted in collaboration with Rolls-Royce at their test stand at NASA Stennis Space Center, Mississippi, from December 2012 to February 2013. The GTD nozzle and centerbody were installed on a Trent 1000 engine as shown in Figure 5-6 and Figure 5-7.

Figure 5-6 – CMC Exhaust on T1000 Engine at NASA Stennis Rolls-Royce Test Pad

Approved for Public Release. Copyright © 2015 Boeing. All rights reserved.

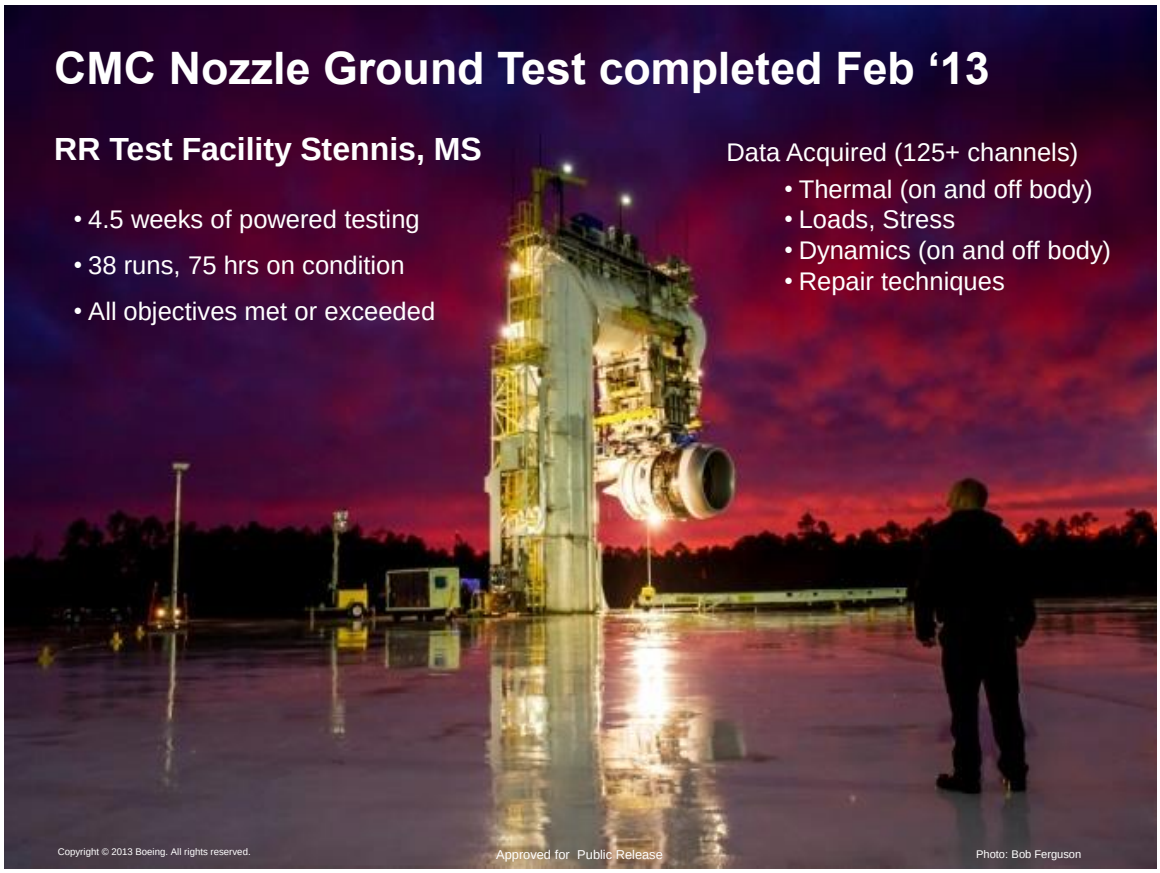

Figure 5-7 – CMC Ground Test Summary

5.4 Flight-Test Demonstration

FAA CLEEN flight testing and associated under-wing ground testing of an oxide CMC primary exhaust prototype were successfully completed on the ecoDemonstrator 787 in July 2014. This achievement matured the technology to NASA/FAA TRL7. Highlights of the CMC flight-test demonstration are shown in Figure 5-8.

The Ground Test Demonstration articles were refurbished and reused for the flight-test demonstration. As was the case for the GTD, the CMC exhaust system was fitted to a Rolls-Royce Trent 1000 engine. Flights originated from Boeing Field (BFI) and included fly-overs of a microphone array at Moses Lake, WA, in support of community noise testing.

The primary objectives of the CLEEN CMC flight-test program were to verify the installed acoustic and structural performance of the CMC exhaust. A secondary objective was to further validate the structural endurance by maximizing the time at flight conditions.

Approved for Public Release. Copyright © 2015 Boeing. All rights reserved.

Figure 5-8 – Summary of CMC Flight-Test Demonstration

CMC exhaust structural performance was demonstrated in a wide range of flight operations, significantly expanding the tested envelope. Structural integrity was verified after test conditions including engine starts, takeoff, climb, in-flight shutdowns and relights, high-g maneuvers, as well as thrust reverser actuation. Boundary conditions and structural analysis predictions were validated and differences were identified for future refinement. A pretest structural repair, as well as simulated field repairs performed well.

Flight-test data included community noise measurements, steady-state and transient ground and flight temperatures, including the response to thrust reverser actuation and in-flight engine shutdowns and relights. Vibration measurements and post-test inspections provided verification of structural integrity. Additional flights with a production titanium exhaust system were conducted to gather baseline noise data for comparison with the CMC exhaust.

5.4.1 Acoustic Measurements, Analysis and Predictions

The CLEEN CMC exhaust acoustic flight test provided an opportunity to successfully demonstrate community noise attenuation at a system level. Figure 5-9 summarizes the expected community noise benefit of the primary exhaust treatment comparing the conventional titanium acoustic exhaust against a CMC exhaust with equivalent acoustic area.

Approved for Public Release. Copyright © 2015 Boeing. All rights reserved.

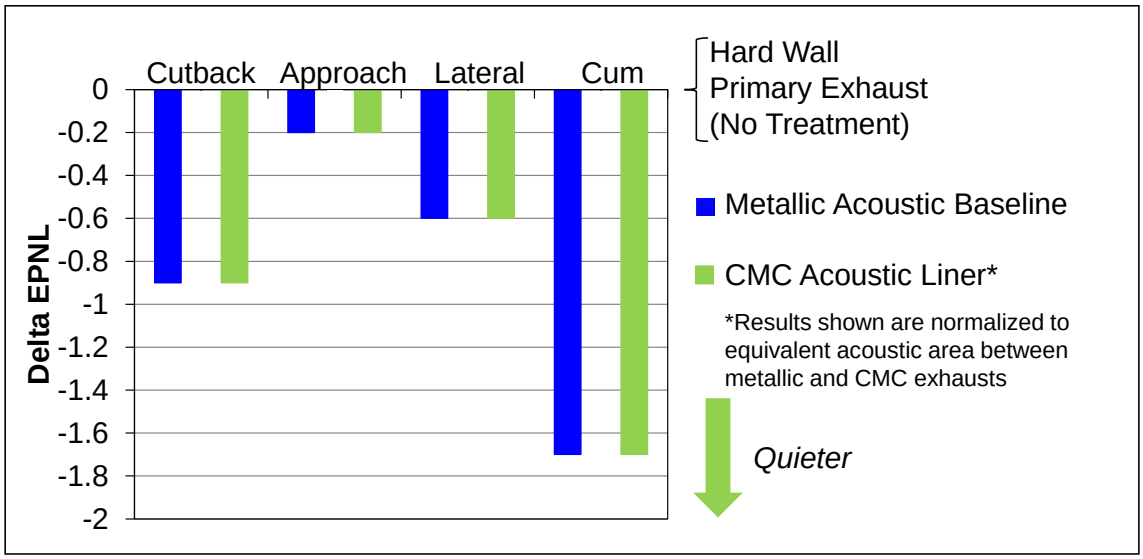

Figure 5-9 – Expected Community Noise Benefit for Conventional Titanium and CMC Exhausts

5.5 Design Cycle 2

Due to programmatic constraints, the prototype ground test hardware was refurbished for flight test instead of executing a redesign and build, as originally planned. As an alternative, a second-generation design effort was initiated and focused on incorporating lessons learned from ground and flight tests. A Preliminary Design Review (PDR) was conducted in March of 2014 and a Detailed Design Review (DDR) was conducted in August of 2015.

The objectives of DC2 were to improve the technical performance metrics of weight, noise, operational temperature capability, and component life with reduced cost components. A secondary objective of improving maintainability and operations was also included to further reduce risk for fleet adoption. These objectives were achieved through a multifaceted approach that included 1) incorporating lessons learned from testing to improve design features and remove conservatism from the design where appropriate, 2) refinement of design and improved analysis fidelity, and 3) reassessing manufacturing methods to be consistent with production-scale processes.

5.6 Technology Transition

Boeing continuously evaluates technologies for potential incorporation into products: retrofits, block-change improvements, derivatives, and new aircraft designs. Development and alignment of technologies is driven, in large part, by market needs that can fluctuate over time. As technologies are evaluated, their applicability to new and existing aircraft, type of aircraft class, and any performance interactions and interdependencies (positive or negative) are considered. Boeing addresses these market needs through new airplane studies. Figure 5-10 shows a timeline of Boeing commercial products.

Approved for Public Release. Copyright © 2015 Boeing. All rights reserved.

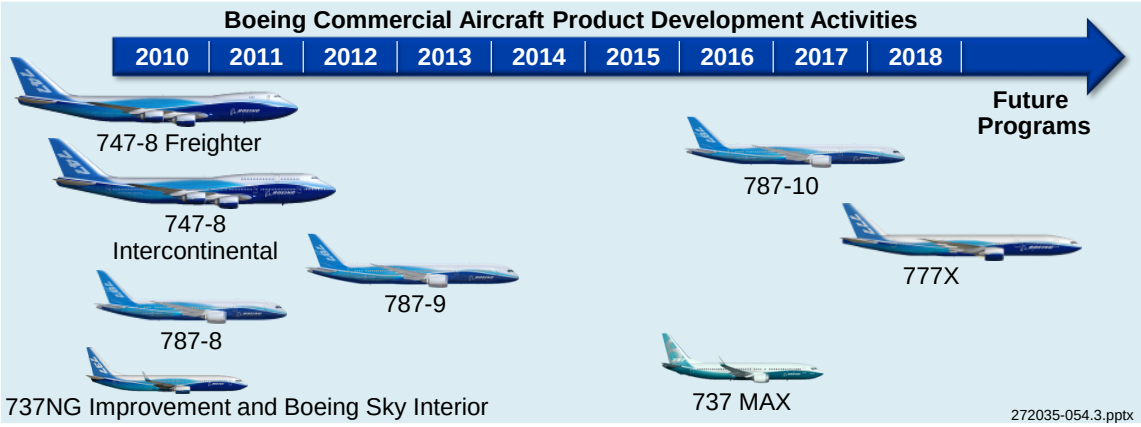

Figure 5-10 – Boeing Skyline of Products and New Airplane Market Studies

Boeing uses a disciplined, gated process to evaluate all technologies, internally or externally developed, for transition to Boeing products as part of this process. TRLs are linked to new product development activities early in their development.

The CLEEN Acoustic CMC Nozzle program is aligned with this process in relation to this transition pipeline. The effort has successfully demonstrated the CMC nozzle capability to TRL7. To achieve transition, additional technology factors must also be addressed. These include supply chain readiness (cost, rate, capacity, and quality) as well as sustainment and support technologies. Costs include both recurring unit cost and the non-recurring cost of supply chain development and qualification. DC2 resulted in a configuration that is projected to weigh and cost less than titanium with temperature performance beyond nickel-based superalloys. With this data available, CMCs are positioned for trade studies for future products and derivatives. Boeing continues to invest in development of CMCs to support future transition opportunities.

Approved for Public Release. Copyright © 2015 Boeing. All rights reserved.

6.0 Technology Assessment

6.1 Technology Demonstrations

Ground and flight-test technology demonstrations performed under CLEEN CMC WBS 3.4 are addressed in sections 5.3 and 5.4, respectively. Full-scale hot-fire ground testing matured the technology to TRL6. Flight testing on the ecoDemonstrator 787 advanced the CMC exhaust to TRL7.

6.2 Technical Performance Metrics

CMC exhaust maturation efforts have been guided by Technical Performance Metrics (TPMs) applicable to CLEEN fuel burn, CO_2 emissions, and community-noise reduction objectives. The CLEEN CMC exhaust TPMs provide actionable weight, temperature, life, and acoustic attenuation performance goals. Along with cost reduction targets, the TPMs were used to ensure CLEEN objectives were satisfied and to position the technology for transition to commercial aircraft. CLEEN TPMs were reviewed with the FAA at major design reviews and at the CLEEN Consortiums.

6.3 System Level Modeling

Under the FAA CLEEN program, Georgia Tech led a system-level modeling effort to assess the system-level impact (in terms of fuel consumption, emissions, and noise) of each of the various CLEEN technologies and projected fleet benefits. The assessments required the analytical incorporation of the technology into their Environmental Design Space (EDS) model. Throughout the process, Boeing supported Georgia Tech to facilitate incorporation of the CMC Nozzle technology into the EDS model and provide guidance as to the inputs and expected trends based on similar concurrent Boeing proprietary modeling efforts. The objective was consensus in output results and trends.

The CMC nozzle is an enabling technology. In addition to providing a weight savings over conventional metallics, the CMC nozzle enables higher engine cycle operating temperatures associated with higher overall pressure ratios (OPR) and movement toward More Electric Aircraft (MEA). The following is a summary of Georgia Tech's EDS modeling efforts and results.

Since the CMC nozzle enables higher cycle temperatures, Georgia Tech proposed an assessment that involved increasing the engine cycle exhaust temperature through increases in OPR. This results in a corresponding reduction in fuel consumption, which can be partially attributed to the CMC nozzle. While other technologies, such as high temperature compressor materials, would also be needed to significantly increase OPR, the CMC nozzle also reduces temperature constraints associated with advanced cycle technology. This process was applied to the EDS Large Twin Aisle aircraft (LTA, 300 passengers) since the ground and flight demonstrations were tested for a similar airplane size class.

Approved for Public Release. Copyright © 2015 Boeing. All rights reserved.

The fuel-burn system-level modeling was based on engine horsepower and bleed-level inputs from industry, which are denoted in Table 6-1. These parameters are important as future aircraft and engines are moving toward electric power architectures, which increase the power extraction from the engine. This, in turn, leads to higher exhaust temperatures. The higher temperature limits present a challenge to conventional titanium-based exhaust nozzles, and even for nickel-based superalloys at very high temperatures. In contrast, CMC is still viable at these high temperatures. The temperature limits for titanium, nickel-based superalloys (such as Inconel 718) and CMC are shown in Figure 6-1, to compare capability. The limits are shown for a hot-day condition, for both the conventional engines and an MEA, at an engine OPR of 40, 50, and 70. As noted in the figure, Inco 718 provides a higher temperature limit, but at the expense of added weight, and it may not provide enough temperature capability for very high OPR. Oxide CMC significantly reduces the temperature constraint for future growth, at a reduced weight compared to the metals. The capability to operate at higher exhaust temperatures (with acoustic treatment), coupled with an MEA, yields significant fuel efficiency benefits, which are illustrated in Figure 6-2.

Table 6-1 – Horsepower and Bleed Modeling Inputs for Conventional and Electric Engines

Variable	Conventional		MEA	
	@ Idle	@ Cruise	@ Idle	@ Cruise
HPX (hp)	375	250	750	625
Bleed (pps)	3.0	3.0	0.0	0.0

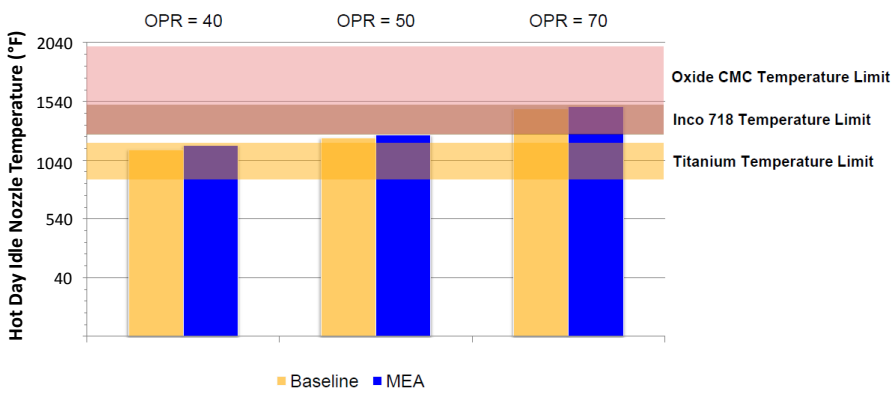

Figure 6-1 – Temperature Limits for Metals and CMC

Approved for Public Release. Copyright © 2015 Boeing. All rights reserved.

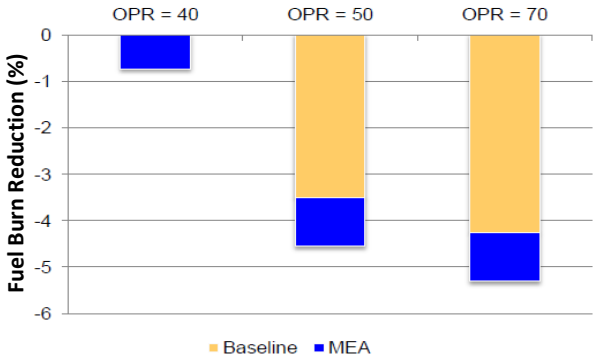

Figure 6-2 – Fuel-Burn Deltas for Baseline and MEA

The system-level noise modeling that Georgia Tech conducted was aimed at assessing the effect of the turbine noise (component) on the total airplane system noise level. The noise prediction tool used in this analysis was NASA's Aircraft Noise Prediction Program (ANOPP), and a representative twin-aisle aircraft engine was selected. At first, the existing ANOPP turbine noise prediction was calibrated spectrally, in collaboration with Boeing, to balance (relative ranking) turbine noise and the other engine noise sources. Then, the spectral difference in noise with and without a treated turbine was derived and adjusted based on technical guidance from Boeing. With calibrated noise models, system-level noise prediction was carried out with and without a treated turbine for the baseline engine and engines with low, medium, and high OPR. The absolute total aircraft system noise levels and the calculated beneficial noise reductions are provided in Table 6-2. Note that the baseline cumulative difference is 1.97 EPNdB, which is close to the 1.7 EPNdB calculated by Boeing. It is also noteworthy that the effect of turbine noise increases with OPR.

Table 6-2 – System-Level Model Turbine Noise (EPNdB) for Various OPR

Baseline			
	With LPT	Without LPT	Difference
Cutback	93.92	92.99	0.93
Approach	98.81	98.05	0.76
Sideline	97.91	97.63	0.28
Cumulative	290.64	288.67	1.97

Low OPR			
	With LPT	Without LPT	Difference
Cutback	95.32	94.32	1
Approach	98.3	97.54	0.76
Sideline	99.05	98.82	0.23
Cumulative	292.67	290.68	1.99

Med OPR			
	With LPT	Without LPT	Difference
Cutback	94.35	93.21	1.14
Approach	97.72	96.67	1.05
Sideline	97.19	96.92	0.27
Cumulative	289.26	286.8	2.46

High OPR			
	With LPT	Without LPT	Difference
Cutback	93.87	92.5	1.37
Approach	97.58	96.47	1.11
Sideline	96.31	95.81	0.5
Cumulative	287.76	284.78	2.98

6.4 Benefits Assessment

Modern aircraft engines have higher operating temperatures to achieve improved fuel efficiency and reduce emissions. These hotter temperatures, driven by increased OPR, have pushed current titanium components to their capability limits. Nickel-based superalloys offer increased temperature performance, but are up to 30% heavier than

Approved for Public Release. Copyright © 2015 Boeing. All rights reserved.

titanium. CMC technology is lighter than current metallic components and can last longer at higher temperatures. The program demonstrated a feasible design that could be up to 20% lighter than titanium. This component weight savings contributes to block fuel savings. Additional block fuel savings are also realized based on the potential for a lowered ground-idle thrust enabled by a CMC exhaust. As discussed in section 6.3 regarding the Georgia Tech CMC System Level Modeling, higher OPR engines operating at off-nominal conditions result in higher exhaust gas temperatures. As an example, ground idle as an off-nominal condition is used to generate power for onboard systems. In many cases, idle may be set higher than required to provide additional fan flow because of exhaust gas temperature limitations. The ability of CMCs to operate at higher temperatures and provide as-good or better community noise treatments while operating at those higher temperatures (beyond that of metals) enables engine operability at higher OPR. Cumulatively, these benefits can result in fuel savings up to 1.0% and up to 2.3 effective perceived noise in decibels (EPNdB) reduction—average for a fleet of single and twin-aisle aircraft with comparisons to a non-acoustically treated exhaust, which was precluded by operational temperatures. Boeing's fuel efficiency assessment is conservative relative to Georgia Tech's because Boeing uses existing engines with lower OPRs than projected in Figure 6-2.

Approved for Public Release. Copyright © 2015 Boeing. All rights reserved.

7.0 Summary

Oxide-Oxide CMC Nozzle maturation performed under the FAA CLEEN program has advanced this environmentally progressive technology toward fleet adoption. Progressing from coupon-level TRL4 through full-scale TRL7 flight testing is a significant accomplishment. It was achieved by executing a building block approach to incrementally maturing the technology under the CLEEN government and industry partnership. Through pooling resources, risk was reduced toward technology transition to commercial aircraft exhausts. The technical performance metrics of weight, life, temperature, and acoustic attenuation substantiate CLEEN fuel burn, CO_2 emissions, and community noise reduction objectives. Cost and operational improvements incorporated in Design Cycle 2 show the promise of this emerging technology as it is being assessed for incorporation on future commercial platforms. Efforts under CLEEN have moved the needle, demonstrating the art-of-the-possible and moving CMC exhaust toward becoming the state-of-the-art.

This demonstration was funded under a collaborative agreement with the Federal Aviation Administration (FAA) under the Continuous Lower Energy Emissions, and Noise (CLEEN) program. CLEEN is an open, competitively bid, cost-share program focused on accelerating new technologies that improve airplane fuel efficiency and decrease emissions and noise.

Boeing thanks the FAA, NASA, AFRL, and Georgia Tech; industry partners Albany Engineered Composites, ATK-COIC, and Rolls-Royce; and other valuable subcontractors for their contributions to the success of the program.

Approved for Public Release. Copyright © 2015 Boeing. All rights reserved.

Acronym List

AEC	Albany Engineered Composites
AFRL	Air Force Research Laboratory
ANOPP	Aircraft Noise Prediction Program
ATK-COIC	ATK Space Systems/COI Ceramics Inc. (company name)
ATP	Authority to Proceed
BCA	Boeing Commercial Airplanes
BFI	Boeing Field
BORIS	Boeing Opportunity, Risk, and Issue System
BR&T	Boeing Research & Technology
BT&E	Boeing Test & Evaluation
C/SiC	Carbon/Silicon Carbide
CLEEN	Continuous Lower Energy Emissions and Noise
CMC	Ceramic Matrix Composite
CMH-17	Composite Materials Handbook-17
DC2	Design Cycle 2
DDR	Detailed Design Review
EDS	Environmental Design Space
EGT	Engine Gas Temperatures
EPNdB	Effective Perceived Noise in Decibels
FAA	Federal Aviation Administration
GTD	Ground Test Demonstrator
IRAD	Internal Research and Development
LTA	Large Twin Aisle
L/H	Length/Height (measure of acoustic treatment area)
MEA	More Electric Aircraft
NASA	National Aeronautics and Space Administration
OPR	Overall Pressure Ratio
OTA	Other Transaction Agreement
PDR	Preliminary Design Review
RFP	Request for Proposal
RR	Rolls-Royce (abbreviation used in figures, only)
SiC/SiC	Silicon Carbide/Silicon Carbide
SOA	State of the Art
TPM	Technical Performance Metric
TRL	Technology Readiness Level
WBS	Work Breakdown Structure

Approved for Public Release. Copyright © 2015 Boeing. All rights reserved.