CLEEN II Short Inlet Ground Test Public Report

FAA Continuous Lower Energy, Emissions and Noise (CLEEN) Technology Demonstration Program

CONTRACT NUMBER

DTFAWA-15-A-80011 Amendment 0003

AUTHOR

Sho Sato

This report was prepared under Federal Aviation Administration (FAA) Other Transaction Agreement (OTA) DTFAWA-15-A-80011, Amend 0003, Continuous Lower Energy, Emissions and Noise II (CLEEN II) Technologies Development. The duration of the contract was from May 2017 through September 2018.

Approved for Public Release

Copyright © 2018 Boeing. All rights reserved.

Approved for Public Release. Copyright © 2018 Boeing. All rights reserved.

Acknowledgements

Boeing thanks the FAA and the Office of Environment and Energy (AEE), led by Levent Ileri, for providing the opportunity to participate in the CLEEN II program.

Boeing also thanks the CLEEN II Program FAA team, Chris Dorbian, Roxanna Moores and James Skalecky, for their keen interest and feedback provided on the test report.

This effort would have not been completed without the strong support from our team partners at Rolls-Royce plc and Rolls-Royce Stennis, lead by Dr. Giulio Zamboni. The Boeing team is grateful for their valuable contribution.

The Boeing CLEEN II short inlet ground test team would also like to thank the contributions of various Boeing internal stakeholders: Boeing Commercial Airplanes (BCA) Product Development, BCA Flight Sciences, BCA Propulsion Systems Division, BCA Propulsion South Carolina, and Boeing Research and Technology (BR&T) South Carolina.

Georgia Tech, led by Christopher Perullo, has provided key expertise in conducting a fleet wide impact analysis on the technology highlighted in the report, and the Boeing team is grateful for their contribution.

The Boeing CLEEN II program exemplified a great working relationship between academia, industry, and the government, all working together toward a common goal of technology maturation aimed at realizing environmental benefits.

Approved for Public Release. Copyright © 2018 Boeing. All rights reserved.

Table of Contents

List of Figures 4
1 Background & Objectives 5
1.1 Introduction 5
1.2 The Short Inlet Collaboration 6
1.3 CLEEN II Short Inlet Ground Test 6
2 Hardware Description 7
2.1 The Short and Baseline Inlets 7
2.2 Test Vehicle 7
3 Test Setup 8
3.1 Height Adjustable Ground Plane 9
3.2 Weather Instrumentation 10
3.3 Video Capture 10
4 Test Conditions and Procedures 11
4.1 Test Conditions 11
4.2 Test Procedures 11
4.3 Weather Limits 11
5 Test Results 12
5.1 General Aerodynamic Behavior of Inlets 12
5.2 Comparison of Short and Baseline Inlet 13
5.3 Effect of Ground Clearance 14
6 Conclusions 15
Acronym List 16

Approved for Public Release. Copyright © 2018 Boeing. All rights reserved.

List of Figures

Figure 1-1. Compact Nacelle Concept 5
Figure 1-2. Production and short inlet comparison 5
Figure 2-1. Short (left) and baseline (right) inlet hardware 7
Figure 3-1. 90º crosswind setup on Bed 60 for Trent 1000 engine with the short inlet 8
Figure 3-2. Short inlet installed on Trent 1000 engine 8
Figure 3-3. Set-up for 90º forced crosswind test 9
Figure 3-4. Set-up for 135º forced crosswind test 9
Figure 3-5. Ground clearance measurement 9
Figure 3-6. Stennis 60 Bed Arena Layout 10
Figure 5-1. Typical distortion level & total pressure contours as a function of fan speed Short inlet operating under crosswind 12
Figure 5-2. Rake total pressure contour, short (left) and baseline (right) inlet nominal ground clearance, low speed 13
Figure 5-3. Rake total pressure contour, short (left) and baseline (right) inlet nominal ground clearance, max design crosswind speed 13
Figure 5-4. Distortion level, short (red) and baseline (blue) inlet max design crosswind speed, nominal ground clearance 14
Figure 5-5. Rake total pressure contour, short inlet @ fan design speed, max blower speed, nominal (left), reduced (center) and lowest (right) ground clearance 14

Approved for Public Release. Copyright © 2018 Boeing. All rights reserved.

1 Background & Objectives

1.1 Introduction

The continual drive for increased aircraft fuel efficiency and lower aircraft noise has driven the designs of modern commercial turbofan engines towards higher bypass ratio (BPR) and lower fan pressure ratio (FPR) designs. The state-of-the-art ultra-high BPR, low FPR turbofan engines require a large engine diameter for a given thrust, which increases the contribution of engine and nacelle assembly to the overall drag and weight of the aircraft. For this reason, a tight and efficient integration of the large diameter engine to the airframe is critical in maximizing the performance of the aircraft system.

Boeing is currently conducting a comprehensive development program for a new nacelle architecture that optimizes the integration of low FPR (LFPR) turbofan engines with our aircraft, as shown in Figure 1-1. The initial phase of this development program is focused on creation of an inlet shorter than the production inlets used on Boeing 787 aircraft, as shown in Figure 1-2. This technology is being explored for future Boeing aircraft, and while the benefit depends on multiple factors, a fuel saving on the order of 1% is currently targeted through the weight and drag reduction provided by this technology. The project documented in this report focuses on the experimental demonstration of the aerodynamics of this short inlet, carried out in collaboration between Rolls-Royce and Boeing. Boeing is also conducting a broad range of acoustic, structural, material, and production system-related studies for this new architecture which are out of scope of this FAA funded program.

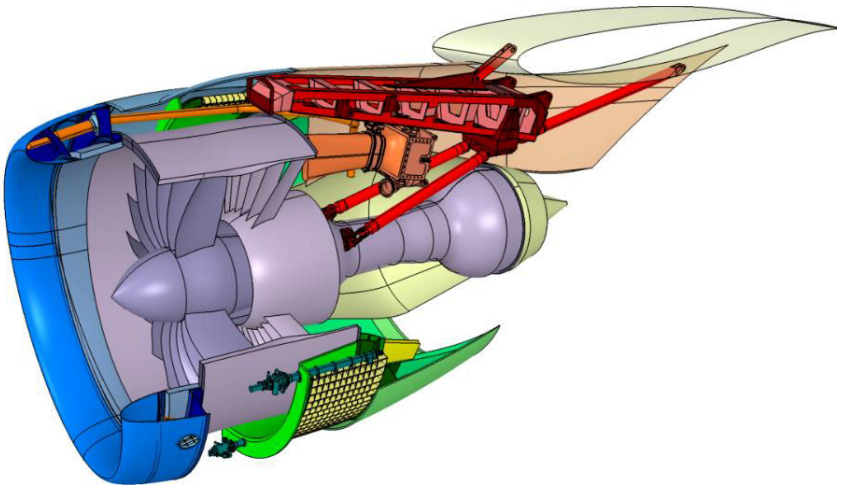

Figure 1-1. Compact Nacelle Concept

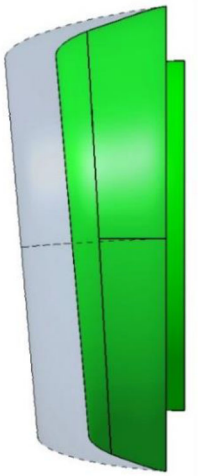

Figure 1-2. Production and short inlet comparison

Approved for Public Release. Copyright © 2018 Boeing. All rights reserved.

1.2 The Short Inlet Collaboration

To ensure the maximum benefit from a short inlet on a future engine and airplane, and to minimize detrimental impacts to engine performance, it is critical to understand the aerodynamic performance coupling between the short inlet and the next generation LFPR engine. Boeing and Rolls-Royce collaborated on this project to leverage each company's expertise in inlet design, airplane/engine integration, and engine/fan blade design. The two companies closely collaborated to obtain high-fidelity analysis and test data and evaluate the technologies prior to application. Boeing provided the inlet test hardware and Rolls-Royce provided test facilities, engine hardware and engine instrumentation.

1.3 CLEEN II Short Inlet Ground Test

The goal of this test campaign was to demonstrate the viability of short inlet technologies for future applications and obtain high quality data within a short inlet design space to calibrate Rolls-Royce and Boeing design and analytical tools and methods. The detailed design and build of the inlet also serves to provide insight to future integration issues of the short inlet hardware. Sufficient data was gathered during the test to ensure engine and inlet performance meet desired goals and fully assess differences between the two inlets in crosswind. Sufficient data was also gathered to assess the effect of each of the two inlets on fan vibration and fan stall in a crosswind environment.

The CLEEN II short inlet ground test, detailed in this report, comprised the aerodynamic testing of a short inlet designed for the Trent 1000 engine in crosswind conditions and comparing its aerodynamic performance against a baseline inlet that has the same aerolines as a Boeing 787 production-standard Trent 1000 inlet, depicted in Figure 1-2.

Operating an airplane on the ground with a crosswind is one of the most challenging conditions for operation of the aircraft engines and is one of the key operating conditions to demonstrate inlet/engine compatibility. As will be highlighted in this report, engines operating in crosswind conditions are subjected to significant flow distortion caused by both inlet separation and a ground vortex. This flow distortion causes an aeromechanical interaction between the inlet flowfield and the fan structure which increases fan blade stresses. For this reason, crosswind testing with a ground plane is required for both Part 25 (transport category airplane) and Part 33 (aircraft engine) airworthiness certification. This testing is done to show acceptable engine operating characteristics and to show that distortion does not cause vibration that is harmful to the engine. In addition to FAA certification requirements, demonstrating that the airplane can operate in crosswind provides value to airlines, as it allows the airplane to be operated more reliably over a wider range of operating conditions.

The ground test of the short and baseline inlets were conducted at the Rolls-Royce Crosswind Test Facility, located on the grounds of the NASA John C. Stennis Space Center. This report summarizes the testing activities conducted as part of the FAA CLEEN II program.

Approved for Public Release. Copyright © 2018 Boeing. All rights reserved.

2 Hardware Description

2.1 The Short and Baseline Inlets

As mentioned in Section 1.3, two inlets were tested during this test campaign: the baseline and short inlets, shown in Figure 2-1.

The baseline inlet is essentially the Boeing 787 production Trent 1000 inlet, modified to incorporate instrumentation such as total pressure rakes and static pressure taps along multiple streamwise cuts, and circumferential stations.

The short inlet was designed and built by Boeing for this test. The inlet incorporated static pressure taps in streamwise cuts, as well as in a circumferential stations similar to the instrumented baseline inlet. The inlet was designed to incorporate the same total pressure rakes used in the baseline inlet.

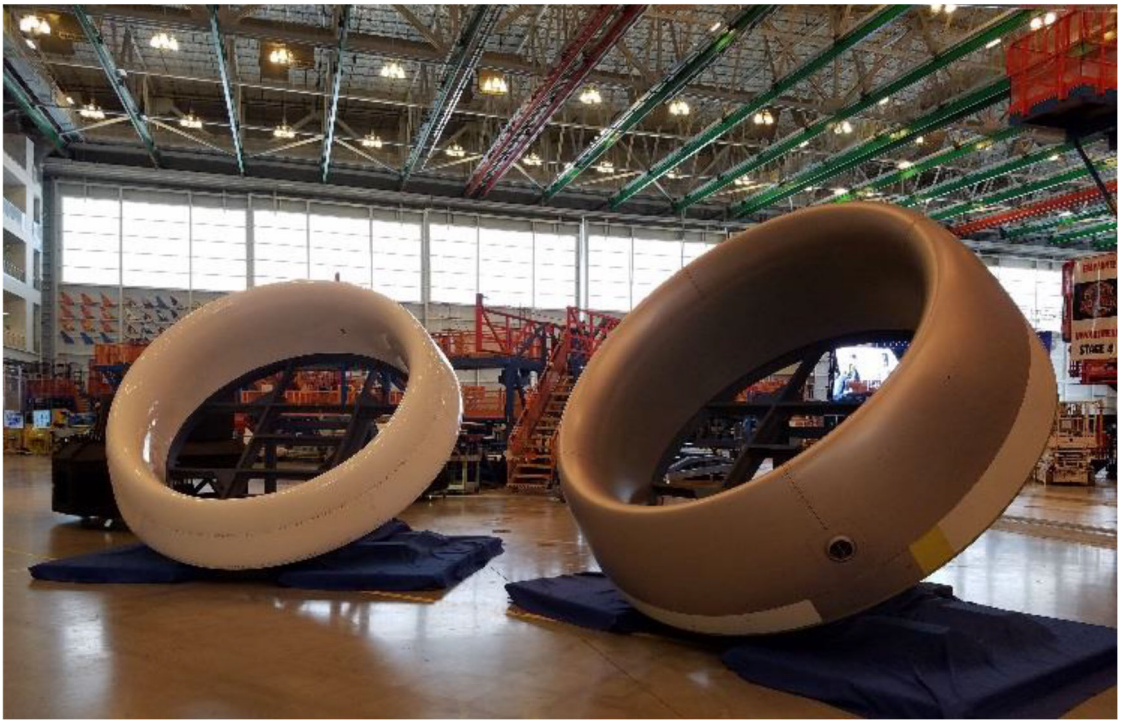

Figure 2-1. Short (left) and baseline (right) inlet hardware

2.2 Test Vehicle

The engine used for this test is a Trent 1000 Package C engine. The engine, previously used in other tests, had a significant amount of instrumentation already installed. For the purposes of the crosswind testing, the engine was configured with a nozzle specifically configured to achieve a fan operating condition representative of the production Trent 1000 engine installed on Boeing 787s.

Approved for Public Release. Copyright © 2018 Boeing. All rights reserved.

3 Test Setup

This chapter provides the description of the test setup and configuration used during this test campaign. The ground test was conducted at the Rolls-Royce Stennis test facility, on Bed 60. Figure 3-1 shows a notional test setup used during this test campaign. A large wind machine, shown on the right side of Figure 3-1 (blue), was used to generate simulated crosswinds. Figure 3-2 shows the short inlet installed on the test engine. Figure 3-3 and Figure 3-4 are illustrations of the complete test setup for the 90º and 135º crosswind tests, respectively. To save time, the 90° test setup (Figure 3-3) was used for ambient wind runs.

Figure 3-1. 90º crosswind setup on Bed 60 for Trent 1000 engine with the short inlet

Figure 3-2. Short inlet installed on Trent 1000 engine

Approved for Public Release. Copyright © 2018 Boeing. All rights reserved.

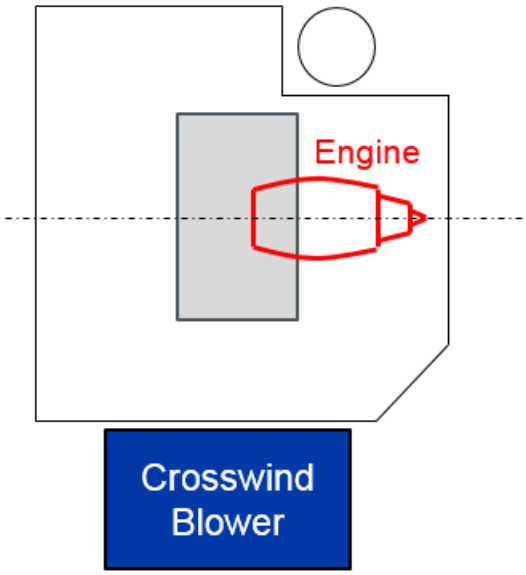

Figure 3-3. Set-up for 90º forced crosswind test

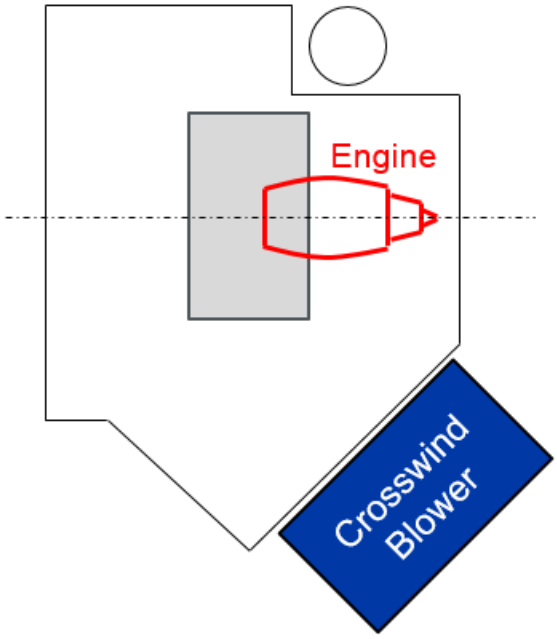

Figure 3-4. Set-up for 135º forced crosswind test

3.1 Height Adjustable Ground Plane

During the crosswind test, Rolls Royce's height-adjustable ground plane was used to obtain appropriate ground clearances. The testing was carried out at the nominal 787 Trent 1000 ground clearance, so that the ground plane was set at the exact distance underneath the engine that is representative of the ground clearance of the Trent 1000 engine on the 787 aircraft.

For the short inlet, the ground clearance was determined such that the distance between the engine centerline and the ground plane was the same as the baseline inlet. In addition to the nominal ground clearance testing, reduced ground clearance testing was also conducted to assess the impact of engine ground clearance to inlet aerodynamics and fan aeromechanics performance. Two additional ground clearances were tested. Figure 3-5 shows an example of ground clearance measurement conducted during the test campaign.

Figure 3-5. Ground clearance measurement

Approved for Public Release. Copyright © 2018 Boeing. All rights reserved.

3.2 Weather Instrumentation

The Stennis 60 Bed arena layout is illustrated in Figure 3-6. A fixed weather station (4-2) is located on the engine center line axis. This weather station was located at a sufficient distance from the engine and used to monitor ambient wind in real time whilst testing, where a transient record of the wind speed and direction were collected.

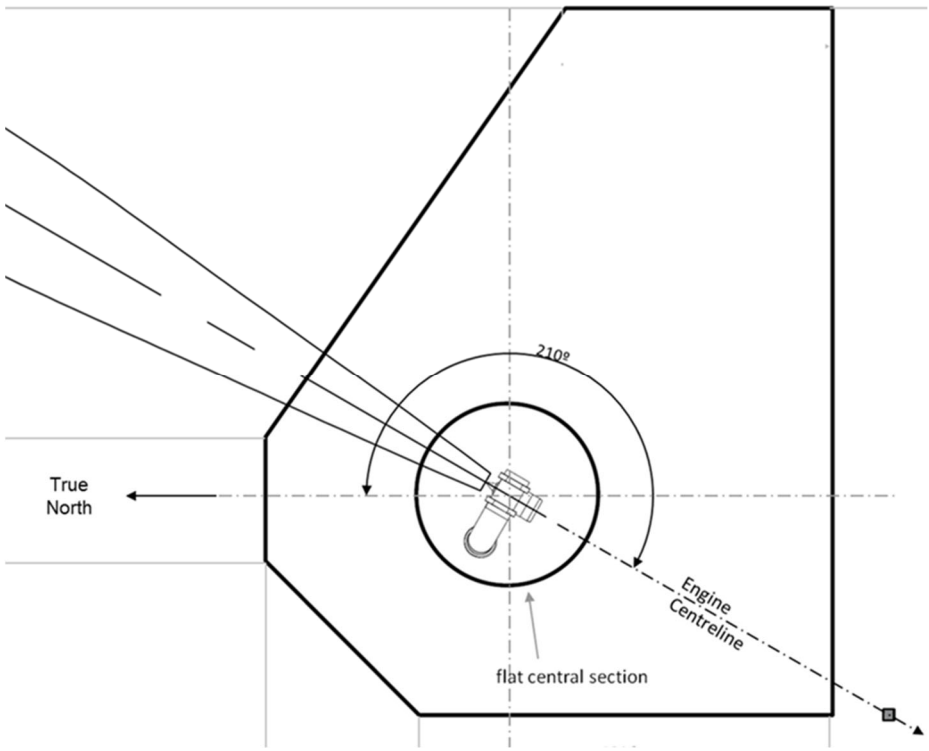

Figure 3-6. Stennis 60 Bed Arena Layout

3.3 Video Capture

Video cameras were used during the test to observe:

- Flow effects inside the inlet, using a camera in the head-on position looking directly into the engine. This camera was at engine centerline height.
- External flow field effects (mainly the ground vortex, which was visible during tests with a ground plane).

The videos were recorded using stand-alone equipment.

Approved for Public Release. Copyright © 2018 Boeing. All rights reserved.

4 Test Conditions and Procedures

4.1 Test Conditions

The crosswind test conditions included several transient maneuvers, such as acceleration/decelerations (accel/decels), and several steady-state conditions at different crosswind speeds, ground plane heights, crosswind angles, and power settings. Accel/decel conditions are a continuous advancement of the engine throttle from idle (or designated fan speed) to maximum fan speed at a given crosswind speed, and then a continuous reduction in throttle from maximum fan speed back to idle.

4.2 Test Procedures

The fully instrumented short and baseline inlet were tested in crosswind conditions over a wide range of ground clearances and crosswind directions. As this test explored the bounds of the inlet and engine performance, a staged approach was used to ensure the test was safely conducted.

During the test at 90-degree crosswind (Figure 3-3), both inlets showed acceptable fan stress levels up to the lowest ground clearance. In order to explore the limits of the inlet and engine operating conditions, the crosswind angle was increased to 135 degrees (Figure 3-4). During this test, the ground plane was set to nominal and the crosswind speeds were varied from zero to the maximum speed allowed for quartering tailwind.

4.3 Weather Limits

It was essential, both for engine safety and to obtain high quality data, to carry out the outdoor tests under controlled conditions. Specific weather limits were established to ensure that the test could be carried out safely, and quality data could be gathered.

In order to protect the instrumentation, no testing was allowed in visible precipitation. Furthermore, a compound criterion (combination of temperature and humidity) was used to avoid excessive condensation effects in the inlet.

Ambient wind limits were established for all natural wind, 90° and 135° crosswind tests. The limits reflect the need to avoid strong natural wind, excessive gusting and other conditions that would compromise test fidelity. During testing, the ambient wind speed and direction were monitored in real-time.

Approved for Public Release. Copyright © 2018 Boeing. All rights reserved.

5 Test Results

5.1 General Aerodynamic Behavior of Inlets

In comparing the aerodynamic behavior of the short and baseline inlet, it is important to first describe the general aerodynamic behavior of inlets operating under crosswind. Figure 5-1 illustrates the typical behavior of the short inlet operating in 90° forced crosswind (direct crosswind). The lines in the plots show the variation of inlet distortion level as a function of fan corrected speed, while the contour plots illustrate the distribution of the total pressure measured by the radial rakes at two representative fan corrected speeds. The inlet distortion level increases when the inlet sees a localized drop in total pressure, and is therefore useful in identifying the existence of separation and/or vortex ingestion by the inlet. The plot shows the distortion level increasing steadily up, indicating that the inlet starts out separated at low fan speed and continues to be separated until the distortion level drops. This is also illustrated by the low total pressure region on the windward side (right side) on the left contour plot. In general, the inlet starts out separated at low power for most crosswind speeds, as the engine is not pulling the air sufficiently for the flow to negotiate the turn around the inlet lip on the windward side. As the engine speed is increased, the fan becomes powerful enough to "pull" the flow around the inlet and the flow remains attached up to the fan face. This can be seen by the sharp drop in the inlet distortion level, as well as the right total pressure contour plot showing no sign of separation on the windward side. In the following section, the aerodynamic behavior of the short and baseline inlets will be compared at low and design fan speeds for the maximum design crosswind speed for the two inlets.

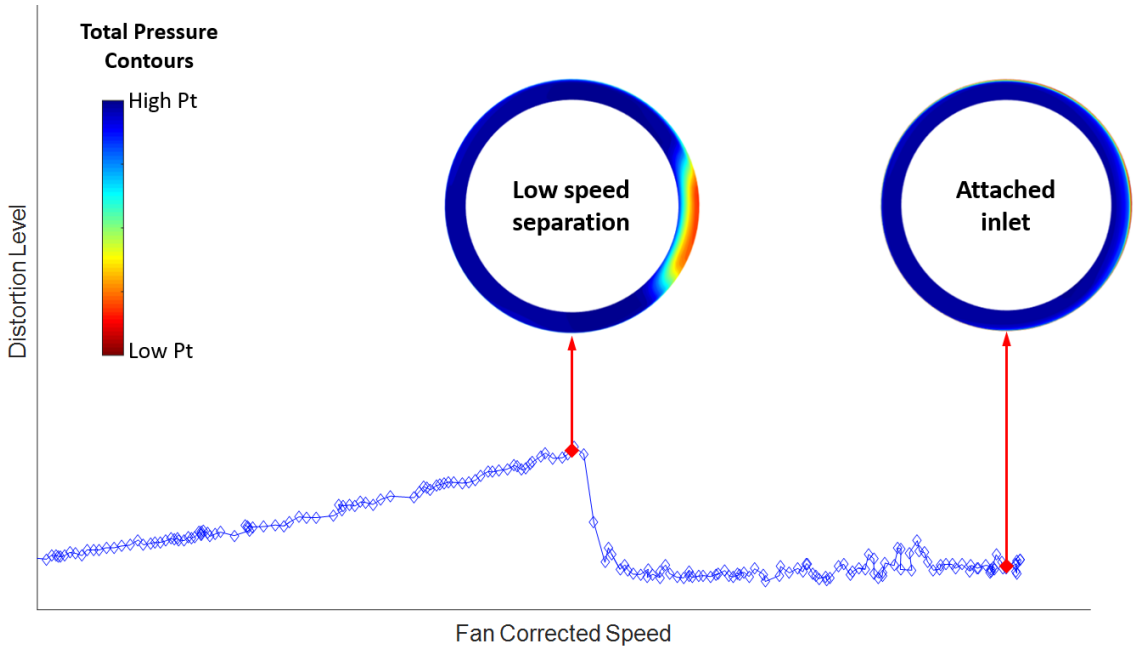

Figure 5-1. Typical distortion level & total pressure contours as a function of fan speed
Short inlet operating under crosswind

Approved for Public Release. Copyright © 2018 Boeing. All rights reserved.

5.2 Comparison of Short and Baseline Inlet

Figure 5-2 and Figure 5-3 show the rake total pressure contour for the short inlet (left) and the baseline inlet (right), operating at low fan speed (Figure 5-2) and fan design speed (Figure 5-3) respectively. The data shown was taken at the nominal ground clearance, for the maximum design crosswind speed intended for both inlets. As shown in the data, both inlets start out separated at low speed but have re-attached at design fan speed, as depicted by the lack of low total pressure region in Figure 5-3. This confirms that both inlets performed to their design intent.

Figure 5-4 shows the distortion level for the short inlet (red) and the baseline inlet (blue), at maximum inlet design crosswind speed. The two inlets exhibit similar behaviors, with minor variation of distortion level between the two inlets, confirming that the performance of the short inlet is in-line with the baseline inlet. With that said, it is interesting to see that the distortion level at low fan speed is consistently higher for the short inlet, while the distortion level at high power after re-attachment is higher for the baseline inlet.

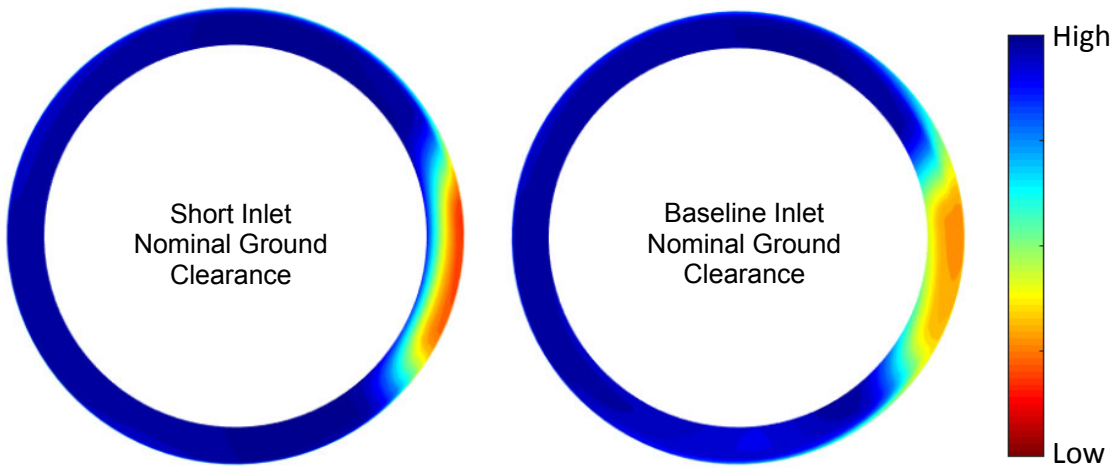

Figure 5-2. Rake total pressure contour, short (left) and baseline (right) inlet nominal ground clearance, low speed

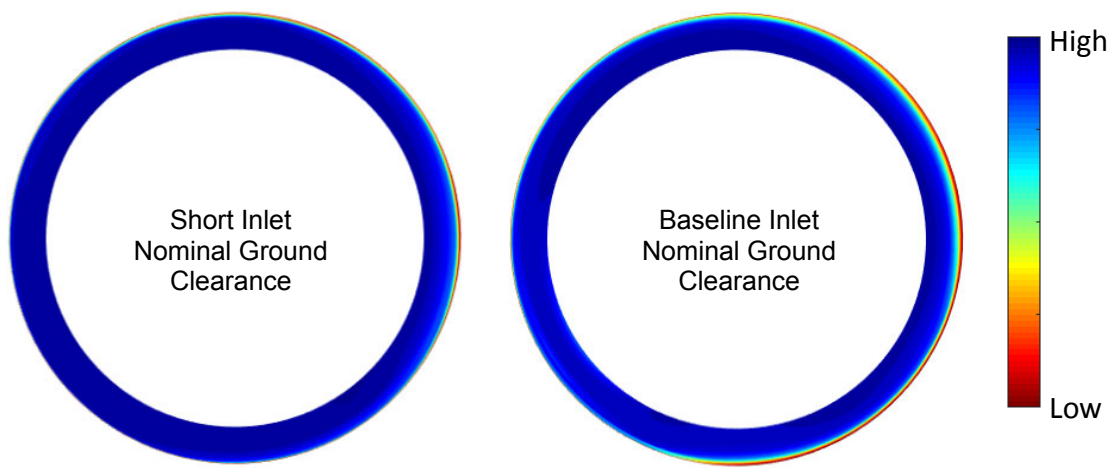

Figure 5-3. Rake total pressure contour, short (left) and baseline (right) inlet nominal ground clearance, max design crosswind speed

Approved for Public Release. Copyright © 2018 Boeing. All rights reserved.

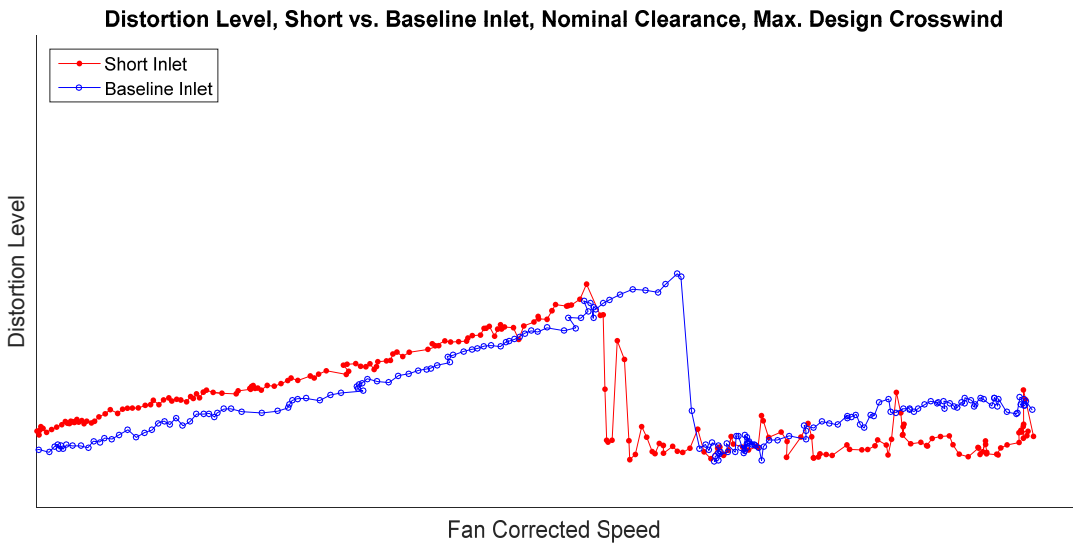

Figure 5-4. Distortion level, short (red) and baseline (blue) inlet max design crosswind speed, nominal ground clearance

From the standpoint of fan aeromechanics, the test results show that most of the resonant responses were similar between the short inlet and the baseline inlet. In most cases, the difference in measured vibration levels between the baseline and short inlet are similar to the differences seen from test-to-test scatter, and the maximum measured stress values which would be used to calculate blade integrity were also very similar.

5.3 Effect of Ground Clearance

This section describes the effect of the ground clearance on the inlet aerodynamic performance. While there is scatter in the data, the general trend showed the degradation of inlet separation performance for both inlets at the lowest ground clearance. Figure 5-5 shows the comparison of the time averaged high speed separation pattern of the short inlet at max blower speed for the three ground clearances tests. While no significant difference can be seen between ”nominal” and “reduced”, there is a noticeable difference in the size of the separation bubble at the ”lowest” ground clearance.

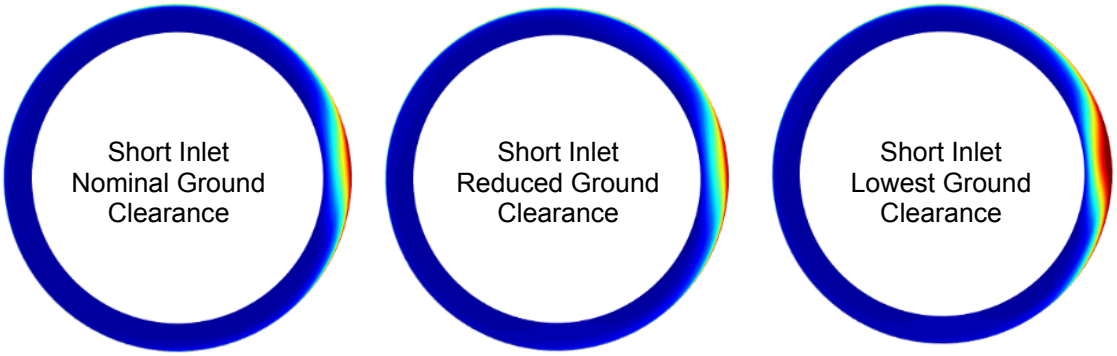

Figure 5-5. Rake total pressure contour, short inlet @ fan design speed, max blower speed, nominal (left), reduced (center) and lowest (right) ground clearance

Approved for Public Release. Copyright © 2018 Boeing. All rights reserved.

6 Conclusions

The ground crosswind test of the short and baseline inlets was conducted successfully and valuable information has been collected to reduce the risk associated with this technology.

From the perspective of the inlet aerodynamic performance, the short inlet performed to the design intent. The ground clearance had a small impact on the inlet aerodynamics as the ground clearance was lowered. While no significant differences were seen between the nominal ground clearance and the reduced ground clearance tested, the smallest ground clearance showed worse inlet separation characteristics compared to nominal. The study of fan blade vibration resonances across a range of engine speeds and flow regimes has shown that they are only affected slightly by the short inlet. In most cases, the difference in measured vibration levels between the baseline and short inlet are similar to the differences seen from test-to-test scatter.

This technology is being explored for future Boeing aircraft, and while the benefit depends on multiple factors, a fuel saving on the order of 1% is currently targeted through the weight and drag reduction provided by this technology.

Approved for Public Release. Copyright © 2018 Boeing. All rights reserved.

Acronym List

BPR	By-pass Ratio
FPR	Fan Pressure Ratio
LFPR	Low Fan Pressure Ratio

Approved for Public Release. Copyright © 2018 Boeing. All rights reserved.