GE
Aviation

CLEEN II MESTANG
Final Report

FAA CLEEN II

MESTANG Final Report – Public Version

30 September 2020

Publication No. YV4129
Deliverable in Response to Government OTA No. DTFAWA-15-A-80013

Levent Ileri, Program Manager
Federal Aviation Administration
800 Independence Avenue, S.W.,
Washington, DC 20591

Submitted by: GE Aviation
111 River Park Drive, Dayton
OH 45409
CAGE Code: 07639

Technical Contact: Samir Dey
937-694-4960
Samir.Dey@ge.com

Program Manager: Venkatesh Saligrama
937-415-0204
Venkatesh.Saligrama@ge.com

TABLE OF CONTENTS

1 INTRODUCTION 6
2 BACKGROUND AND GOALS 7
3 SYSTEM DEVELOPMENT 8
4 AIRCRAFT LEVEL MODEL 11
5 DYNAMIC MODEL 13
6 LRU DESIGN AND TESTING 14
7 INTEGRATION & SYSTEM TESTING 18
8 CONCLUSION 25

LIST OF TABLES

Table 1-1 – Acronyms and Abbreviations 6
Table 7-1 – Steady State Operating Conditions 24

TABLE OF FIGURES

Figure 3-1 – 300 kW Aircraft Architecture 8
Figure 4-1 – Breakdown of System Impact on Fuel Savings (500 NM, Icing Conditions) 11
Figure 6-1 – HPSG generator 14
Figure 6-2 – PID diagram of HPSG generator cooling 15
Figure 6-3 – HPSG Component Testing 15
Figure 6-4 – PCU Assembly 16
Figure 6-5 – Heat Sink with fans 16
Figure 6-6 – 150kW SGMC Prototype 17
Figure 7-1 – Test Cell Setup 18
Figure 7-2 – PDP Schematic 19
Figure 7-3 – PDPIB & DAQ Rack 19
Figure 7-4 – Hydraulic Cart 20
Figure 7-5 – Scavenge Cart 21
Figure 7-6 – SGMC Control Panel 21
Figure 7-7 – HPSG/ECS Sensor Box 22
Figure 7-8 – Neptune Load bank 22
Figure 7-9 – HPSG and PCU Open Loop Test block diagram 23

1 INTRODUCTION

1.1 Scope

This data item compiles the Final Report for the CLEEN II MESTANG system.

1.2 Acronyms and Abbreviations

The acronyms and abbreviations shown in *Table 1-1* are used within this document.

Table 1-1 – Acronyms and Abbreviations

Acronym	Meaning
CPL	Constant Power Load
CAI	Cowl Anti Ice
DAQ	Data Acquisition
DC	Direct Current
ECS	Environmental Control System
EPB	External DC Power Source Circuit Breaker
GCB	Generator Circuit Breaker
GCU	Generator Control Unit
HPSG	High Pressure Spool Starter/ Generator
IDG	Integrated Drive Generator
LC	Load Contactor
LPS	Low Pressure Spool
LP SRC	Low Pressure Source
MEA	More Electric Aircraft
MESTANG	More Electric System and Technologies for Aircraft in the Next Generation
OEW	Operational Empty Weight
PCU	Power Conversion Unit
PDP	Power Distribution Panel
POR	Point of Regulation
RL	Resistive Load Bank
RTD	Resistance Temperature Detector
SFC	Specific Fuel Consumption
SGMC	Starter/ Generator/ Motor Controller
TRU	Transformer Rectifier Unit
WAI	Wing Anti Ice

2 BACKGROUND AND GOALS

2.1 BACKGROUND

The Federal Aviation Administration is seeking to establish an effort, on a cost share basis, to develop continuous lower energy, emissions and noise (CLEEN) II technologies for civil subsonic jet airplanes to help achieve the Next Generation Air Transportation System (NextGen) goals to increase airspace system capacity by reducing significant community noise and air quality emissions impacts in absolute terms and limit or reduce aviation greenhouse gas emissions impacts on the global climate. The CLEEN II program is focused on reducing current levels of aircraft noise, air quality and greenhouse gas emissions, and energy use, and advancing alternative fuels for aviation use. The focus of this effort is to: (I) mature previously conceived noise, emissions and fuel burn reduction technologies from Technology Readiness Levels (TRL) 5-6 to enable industry to expedite introduction of these technologies into current and future aircraft and engines, and (2) assess the benefits and advance the development and introduction of alternative "drop in" fuels for Aviation, with particular focus on renewable options, including blends.

2.2 Customer Objectives

More Electric Systems and Technologies for Aircraft in the Next Generation (MESTANG), is an integrated aircraft power system designed to support future “more-electric” aircraft architectures that reduce fuel burn by up to 3 percent for single-aisle aircraft while improving performance at equivalent cost

2.3 Definition:

MESTANG lab demonstration program integrates key General Electric Aviation Systems technologies into a dual channel, split, 300 kW Electric Power Generation System for Next-Generation Narrow-Body aircraft.

2.4 MESTANG Goals and Objectives

The main objectives of the MESTANG lab demonstration program is to integrate key General Electric Aviation Systems (GEAS) technologies into a dual channel, split, 300 kW (150kW per channel), Electric Power Generation System (EPGS). This represents one half of a 600 kW More Electric Aircraft (MEA) Electric Power Generation System. The voltage of the 300kW EPGS will be described as ±270 Vdc when the positive or negative power conductors are referred to ground or neutral and will be described as 540 Vdc when the power conductors are referred to each other. All loads are connected between the 540 Vdc power conductors.

- Prove ±270 VDC primary power system feasibility through lab demonstration and modeling
- 150kW ±270 VDC High Pressure Spool Starter / Generator (HPSG), including Power Conversion Unit (PCU)
- Demonstrate all-SiC based Starter / Generator / Motor Controller (SGMC)
- Demonstrate dual spool equivalent power extraction
- Prove up to 3% fuel savings by performing aircraft + engine + power system aircraft modeling
- Limited TRL 6 rating by 2020 at EPISCENTER

3 SYSTEM DEVELOPMENT

3.1 System Block Diagram

Figure 3-1 represents outline diagram of 300 kW of Electrical power generation system which represents one half of the MESTANG 600 kW More Electric Aircraft (MEA) power generation system.

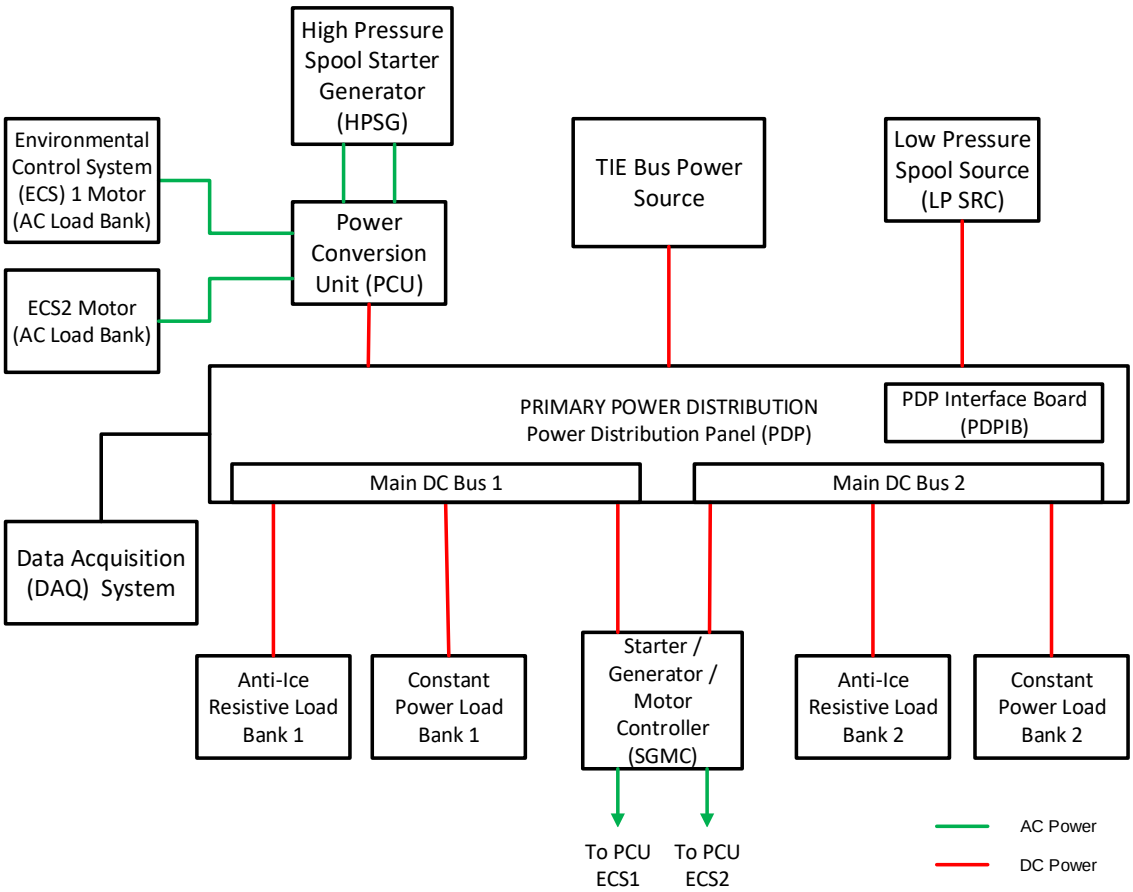

Figure 3-1 – 300 kW Aircraft Architecture

Since the EPS system is symmetric and split isolated for the left- and right- side channel, a 300 KW single-sided architecture is used for the key MESTANG demonstration architecture components.

- The MESTANG EPGS shall extract mechanical power from both the Low-Pressure Spool (LPS) and the High-Pressure Spool (HPS) of the engine, then convert it to (+/-270) 540 V DC electric power.
- Each of the LPS and HPS channels shall be capable of providing 150 kW of (+/-270) 540V DC power at its associated output terminal.

The MESTANG EPGS consists of the following components within the system under test:

- 150 kW High Pressure Spool DC Starter/ Generator (HPDCSG)
- Starter/Generator Motor Controller (SGMC)
- Standard Aviation Electromechanical DC Contactor
- Electromechanical 3-Phase AC Switch
- GE Technology DC Circuit Breaker (DCCB)
- DC Main BUS 1
- DC Main BUS 2
- TIE Bus

- Power Distribution Panel (PDP)
- PDP Interface Board
- Power Conversion Unit (PCU)
- DC Power Feeders
- AC Power Feeders

The MESTANG EPGS testing is supported by the following components external to the system under test:

- 150 kVA Low Pressure Spool DC Power Source (LP SRC)
- SWITCH & STATUS PANEL
- External DC Power Source
- ECS Motor 1 (ECS1)
- ECS Motor 2 (ECS2)
- Resistive Load Bank (RL1)
- Constant Power Load Bank (CPL1)
- Resistive Load Bank (RL2)
- Constant Power Load Bank (CPL2)

3.1.1 System Operation

MESTANG EPGS operation is divided into four major functions after initialization, which are summarized as follows:

Initialize
Upon receiving 28 Vdc aircraft power, the SGMC initializes, then awaits commands to perform system operations.

Engine Start
The SGMC receives a command to Start the engine. The SGMC positions SW1 and SW2 as needed to provide AC Start power to the HPSG.

Generate Power
The SGMC produces 540 Vdc power when the HPSG shaft speed is in the proper speed range, automatically.

Bus Controller Operation
The SGMC is the System Bus Controller, applying 540 Vdc power as commanded. The SGMC also applies AC power to ECS1 and ECS2 when commanded.

Faults / Protections
Upon detection of a fault condition, the MESTANG EPGS is able to take the actions under SGMC control for protection.

3.1.2 System States, Modes, and Transitions:

The MESTANG System can be in one of three states: OFF State, OPERATIONAL State, or FAULT State. Upon entering the OPERATIONAL State, the System enters INITIALIZE Mode. Upon successful completion of INITIALIZE Mode, the System simultaneously enters three Modes: PROTECTION Mode, BUS CONTROLLER Mode, and IDLE Mode. Failure to successfully complete INITIALIZE Mode results in the System to enter the FAULT State.

3.1.3 System Modes

The MESTANG System can be in the Modes described below. It is possible for the MESTANG System to be in several Modes simultaneously.

- INITIALIZE Mode: Upon entering INITIALIZE Mode, the MESTANG System SGMC powers up and prepares for system operation. Upon successful completion of INITIALIZE Mode, the MESTANG System enters three modes: PROTECTION Mode, BUS CONTROLLER Mode, and IDLE Mode.
- IDLE Mode: In IDLE Mode, the MESTANG System is providing BUS CONTROLLER Mode and PROTECTION Mode functions. In IDLE Mode, the MESTANG System is awaiting instructions to provide START, ECS OPERATION, and GENERATION Mode functions.
- START Mode: The MESTANG System enters START Mode when commanded and the HPSG speed is in the proper starting range. In START Mode, the MESTANG System configures the PDP to the Start Engine Mode. The MESTANG System then provides the starting torque and power at the output shaft of the HPSG, as described in the following paragraphs. Upon completion of Start Mode, the MESTANG System automatically transitions to IDLE Mode.

4 AIRCRAFT LEVEL MODEL

The purpose of the aircraft level model is to evaluate the benefits of a More Electric Aircraft as part of the CLEEN II project and the associated results. Two aircraft have been modeled, as follows:

- A Baseline Aircraft: A 'traditional' aircraft, with several bleed air/pneumatic systems.
- A More Electric Aircraft: A next generation 'More Electric Aircraft' (MEA) with electric systems replacing some of the bleed air systems.

These models are used to assess differences in Specific Fuel Consumption (SFC) between the two aircraft.
The modeling effort focuses on the following systems, which differ between the two aircraft as follows:

- Anti-Icing Systems. The Nacelle Cowl Anti Icing (CAI) System provides ice protection for the engine cowl (nacelle) inlet and is pneumatically powered on both aircraft. The Wing Anti-Ice (WAI) system, providing protection of the wing leading edges, is pneumatically powered on the baseline aircraft but electrically powered on the MEA.
- Environmental Control Systems. The Environmental Control System (ECS) is pneumatically powered on the baseline aircraft, but electrically powered on the MEA.
- Electrical Systems. The primary Electrical System is based on 115VAC on the baseline aircraft, but +/- 270VDC on the MEA.
- Propulsion Systems. Both aircraft are based same engine to allow a meaningful comparison of the two aircraft systems. The baseline aircraft engine has a single main electrical generator, whereas MEA engine has two main electrical generators; one driven from the high-pressure spool and the other from the low-pressure spool.

4.1 Summary Breakdown of Fuel Savings

Based on the analysis, the fuel savings can be summarized to show the contribution of ECS, WAI and Dual-Spool system changes and the weight and drag impact

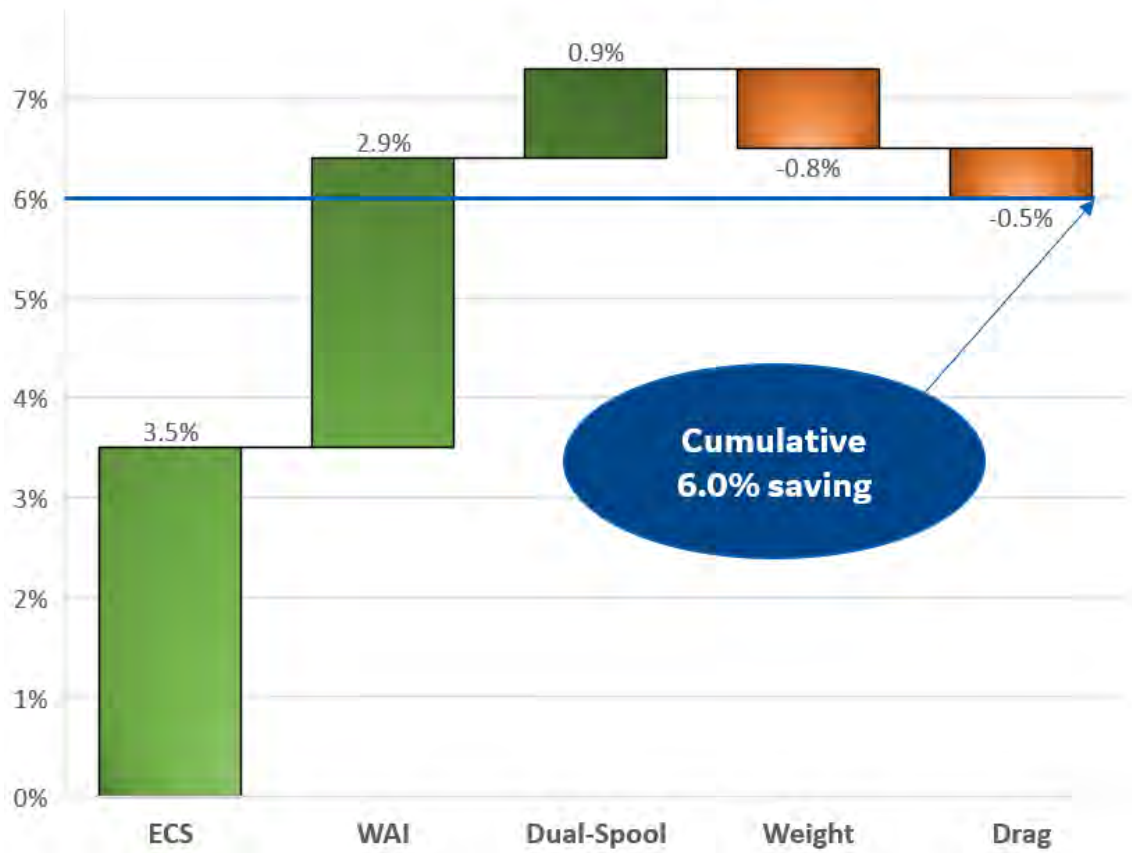

Figure 4-1 – Breakdown of System Impact on Fuel Savings (500 NM, Icing Conditions)

4.2 Summary of Findings and Discussion Points

Results presented are based on the standard Pace-generated flight profile. Results would differ with a different profile (e.g. more gradual rate of climb/descent).

- Extracting Power from Shaft rather than compressor bleed results in higher fuel efficiency.
- Extracting Power from LP spool rather than HP spool results in higher fuel efficiency during engine-idle operations.
- Engine-Idle cases provide most significant savings
- Savings are Significantly Lower During Cruise
- Fuel savings will increase if MEA weight is reduced – e.g. accepting a lower estimate or offsetting weight gains.

4.3 Further Advantages of More Electric Aircraft

The modeling work is focused on assessing the benefits of a More Electric architecture on fuel consumption. However, there are other potential benefits of changing from bleed-based to electric systems. This section simply provides a summary of other areas which may benefit from a more electric architecture.

- Reliability
- Built-In Test and Maintainability
- Composite inlet lip skin and improved aerodynamic performance.
- Emissions
- Cabin Air Quality
- More efficient engine design due to elimination of bleed air.

5 DYNAMIC MODEL

5.1 System Model Overview

The CLEEN II MESTANG systems dynamic simulation is focused mainly on the HPSG and the PCU, and the development of the control laws for the SGMC. Models of the HPSG and PCU as well as controllers for the different mode of operation were developed and executed using PLECS Block set in MATLAB Simulink.

5.2 Model Design Descriptions

This section contains a brief description of the different parts of the dynamic model that were developed, namely:

- HPSG Circuit
- PCU Circuit
- Generator Mode Controller
- Starter Mode Controller

5.2.1 HPSG Circuit

The HPSG circuit model is comprised of the models of the following physical components:

- Exciter machine
- Full-wave rotating rectifier
- Main machine

5.2.2 PCU Circuit

The PCU is needed to convert the AC to DC power

5.2.3 Generator Mode Controller

When the HPSG is in Generator mode, only one controller is required. The Voltage Controller is a customized block in PLECS that host the control algorithm and provides the gate signal to the PLECS MOSFET blocks that model the Exciter Inverter circuit and regulates the DC bus voltage as desired.

5.2.4 Starter Mode Controller

When the HPSG is in Starter mode, two controllers are required. The Exciter Current Controller is a customized block in PLECS that host one part of the control algorithm and provides the gate signal to the PLECS MOSFET blocks that model the Exciter Inverter circuit and produces the desired Exciter current as the speed of the HPSG increases. The Main Current Controller is also a customized block in PLECS that host the other part of the control algorithm and provides the gate signal to the PLECS MOSFET blocks that model the Main Inverter circuit, and produces the desired starter current to the main machine as the speed of the HPSG increases as well as the generated torque.

5.3 Model Verification and Validation

The dynamic model is verified by comparing the results of the simulation in MATLAB Simulink with the results from the FEA model and by test.

6 LRU DESIGN AND TESTING

6.1 High Pressure Spool Starter/ Generator (HPSG)

The 150 kW High Pressure Spool Starter/ Generator (HPSG) produces AC power when acting as a generator and consumes AC power when acting as a starter. The HPSG generator's rating was computed based on the power factor and losses in the PCU to meet the power requirements at POR.

6.1.1 HPSG Detail Design

The HPSG is three stage Generator with main stage, exciter stage and PMG stage.

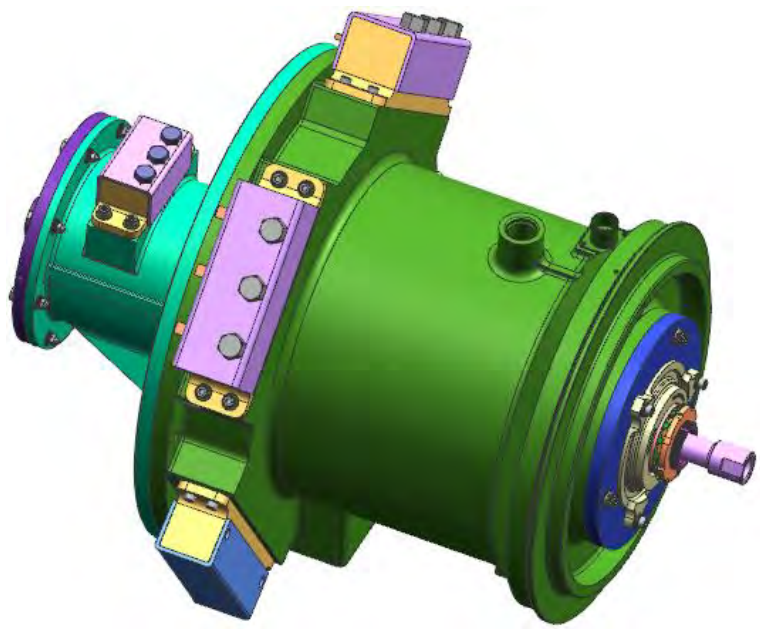

Figure 6-1 – HPSG generator

6.1.2 Cooling System

The thermal stress on the electrical machines is created by the losses dissipated in the system which will heat different components of the machine, like windings, rotor cages, magnets, and they must get dissipated in an efficient manner though efficient, low cost cooling design. The cooling design is expected to minimize and control temperatures the overall system consisting of various components to maintain for its long life, durability and safety operation.

The cooling oil pats are designed in the stator and the rotor to ensure cooling of the all the windings, electromagnetic cores, rectifier and the bearings. Once the oil cooled the critical heat generation path, the hot oil is collected back to tank using oil adopters and manifolds.

The PID diagram of the oil system for generator operation is given in *Figure 6-2*.

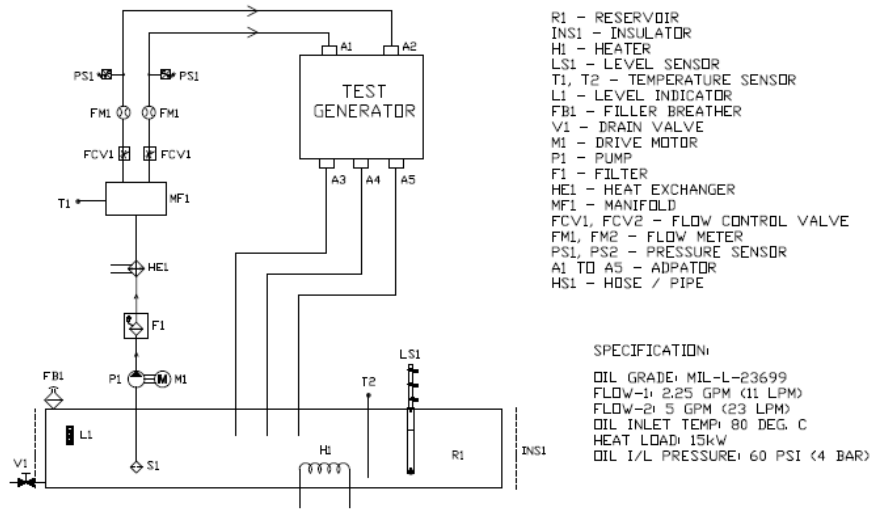

Figure 6-2 – PID diagram of HPSG generator cooling

6.1.3 HPSG Thermal and Structural Analysis

FE analysis of all the components and subassemblies were done to satisfy operating conditions at all corner points with satisfactory safety margins.

6.1.4 HPSG Component Testing

Open loop load testing is done on HPSG to check electrical performance and mechanical integrity. HPSG showed stable mechanical performance with full load.

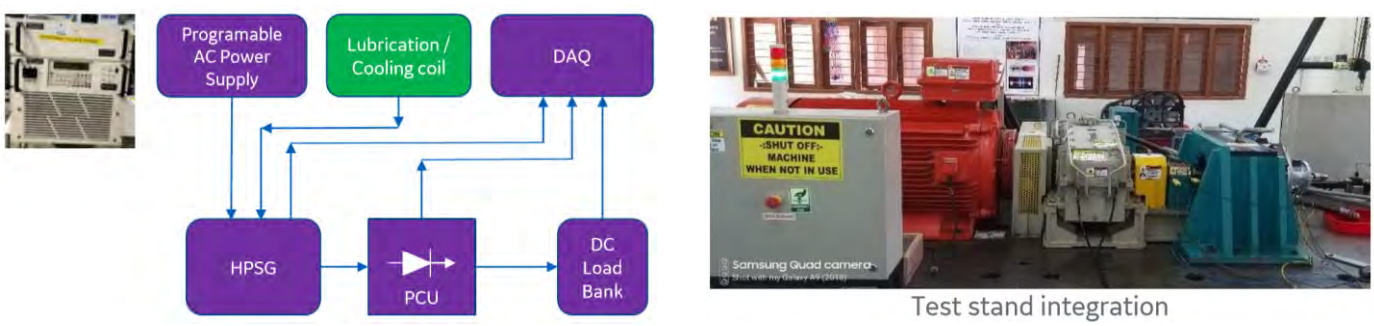

Figure 6-3 – HPSG Component Testing

6.2 Power Conversion Unit (PCU)

Power Conversion Unit (PCU) is a downstream component of HPSG in HPDCSG. It converts the AC voltage from HPSG/INV to a DC voltage.

6.2.1 PCU Mechanical Design and Packaging

The PCU circuit is packaged inside a enclose and designed to meet the mechanical and thermal requirements. The assembly as shown in the *Figure 6-4* consists of following parts and has the following major parts

1. Enclosure
2. Heat Sink
3. Fan
4. Electronic Components

Figure 6-4 – PCU Assembly

6.2.1.1 Enclosure

Enclosure is aluminum box which contains all the PCU devices and it has two compartments top and bottom. Both the compartments are separated by aluminum sheet. Top compartment contains two transfer switches and bottom compartments has rest of all the PCU components. The enclosure also carries six AC connectors, two DC connectors and five connectors for instrumentation.

6.2.1.2 Heat Sink

PCU has aluminum bonded fins type heat sink for cooling the Electronics components. To enhance the cooling, four fans are directly fastened on the heat sink as shown. All the heat dissipating devises are mounted on the heat sinks. It also has three RTDs for temperature measurement.

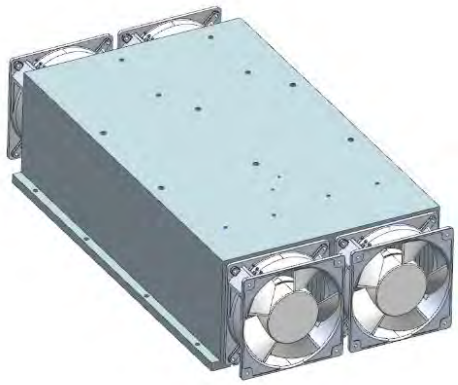

Figure 6-5 – Heat Sink with fans

6.2.2 PCU Thermal Management and Analysis

PCU is designed to meet the temperature limits on each component. A details thermal analysis is done using Ansys ICEPAK. It is ensured that the maximum temperature from thermal analysis is not exceeding the limiting temperature of the diode junction temperature, switch casing, inductor cores and winding insulation.

6.3 Starter Generator Motor Controller (SGMC)

As the main DC and AC electrical power converter in CLEEN II MESTANG electrical system, the Starter/Generator Motor Controller (SGMC) has below major four functions:

- Start the 150kW electrical machine, High Spool Starter Generator (HPSG), by converting +/-270Vdc bus DC power to AC power.
- Drive the Environment Control System (ECS), two separate channel PM machine, by converting +/-270Vdc bus DC power to AC power.

- Control HPSG exciter, by exciting and regulating HPSG's excitation field, for a 150kW +/-270Vdc power generation.
- Provide power bus main contactor control for the lab demonstration system, including High Speed DC Contactors, standard aviation electromechanical DC contactors, and the AC switches.

6.3.1 SGMC Overview and Specification

SGMC is a 150kW DC/AC inverter. The SGMC prototype's picture and its specifications are listed below.

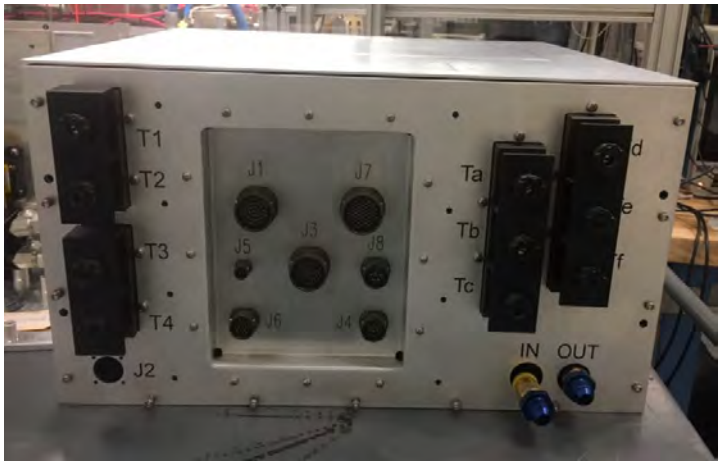

Figure 6-6 – 150kW SGMC Prototype

6.3.2 SGMC Mechanical Design

The SMGC unit is a high-power density and production intent TRL-5 level design. Therefore, each component mechanical design and their packaging have been designed as compact and dense as possible.

The main power stage takes a significant portion of SGMC total weight and size and is also the main path conducting 150kW power flow under a starter working mode. Therefore, the power stage component packaging and layout not only drive SGMC system density, but also determine the SGMC's thermal, EMI and even power output performances.

6.3.3 SGMC Hardware Validation Testing

Before SGMC and HPSG system integration, all SGMC hardware has gone through necessary validation testing. There were three major subsystem tests: 1) CCA integration testing 2) 150kW dual channel power stage power testing, and 3) Exciter Inverter Generation Control Testing.

7 INTEGRATION & SYSTEM TESTING

7.1 Objective

The functional requirements for the CLEEN II MESTANG are defined by the System Requirements section. The objective of system testing is to meet the functional and performance requirements defined in System Requirements section. By performing requirements-based testing, the various verification matrices outlined in this plan show verification evidence.

7.1.1 Integration Control

Mentor-graphics Capital tool environment is used to design and manage the logical connectivity designs (signals), and physical wiring designs (wires & harness) for the integration of Sub-systems and test equipment. It Provides platform level electrical design and visualization, helping early stage platform layout, which allows to inspect difficulties in sub-system and equipment installation and serves better handling for changes in Integration design and maintenance.

7.2 Test Cell Set-up

The MESTANG system LRU's and associated test equipment were installed in Test Cell at the GE Aviation EPISCenter in Dayton, OH. The *Figure 7-1* shows the layout of the LRU's and Test Equipment within the test cell and the control room as well as the basic types of interconnections for hydraulic oil, AC and DC power.

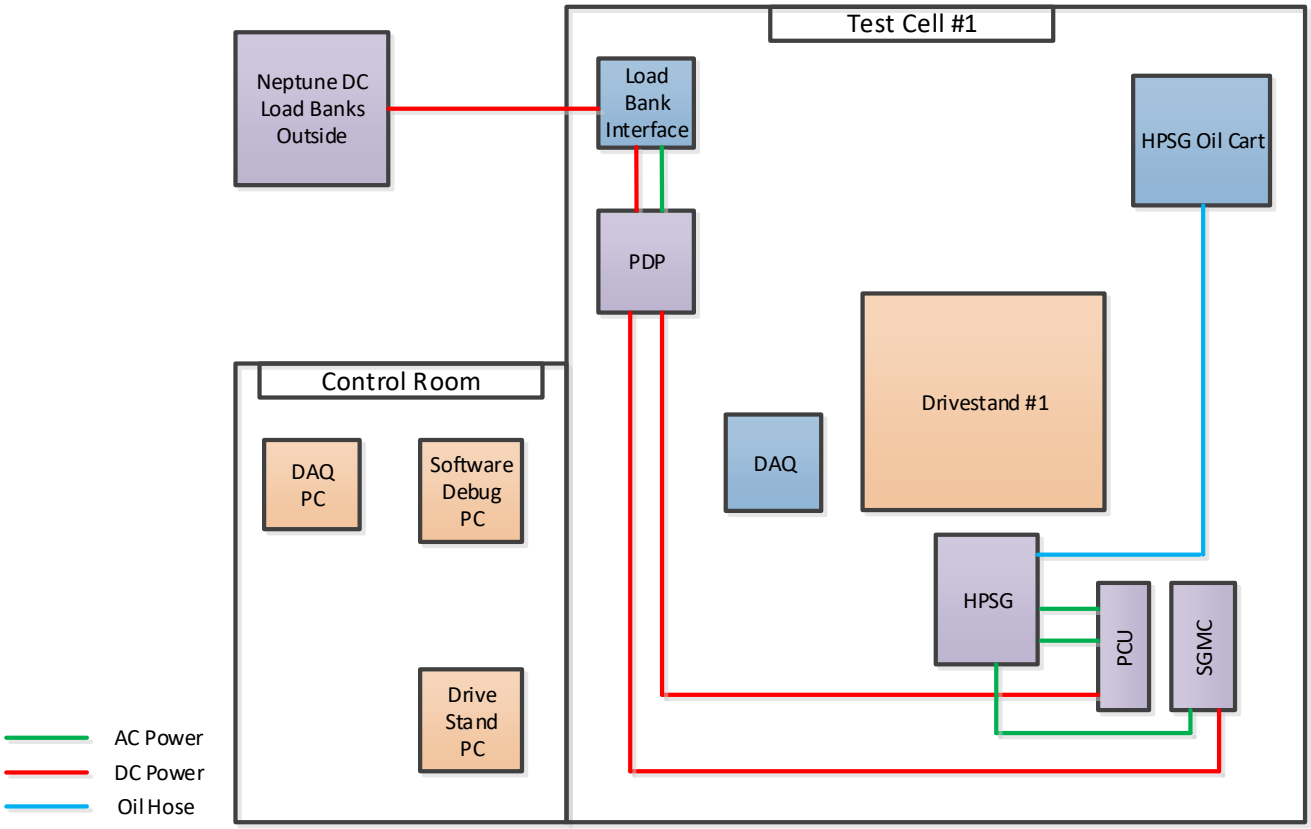

Figure 7-1 – Test Cell Setup

7.3 Test Equipment Set-up

7.3.1 Power Distribution Panel

The Power Distribution Panel (PDP) contains the following devices: PDP Interface Board (PDPIB), High Speed DC Contactors, the Electromechanical DC Contactors, DC Main BUS 1, DC Main BUS 2, and the TIE Bus. These contactors

allow the MESTANG system power flow to several load banks or power transfer from SGMC to HPSG to perform engine start function.

PDP Interface circuit board has a CAN communication interface to the SGMC. It provides actuation and status circuits for Electromechanical DC Contactor, Electromechanical 3-Phase AC Switches, and DCCB hybrid circuit breakers. Control of these switches and contactors can also be achieved manually using GUI on the Data Acquisition system.

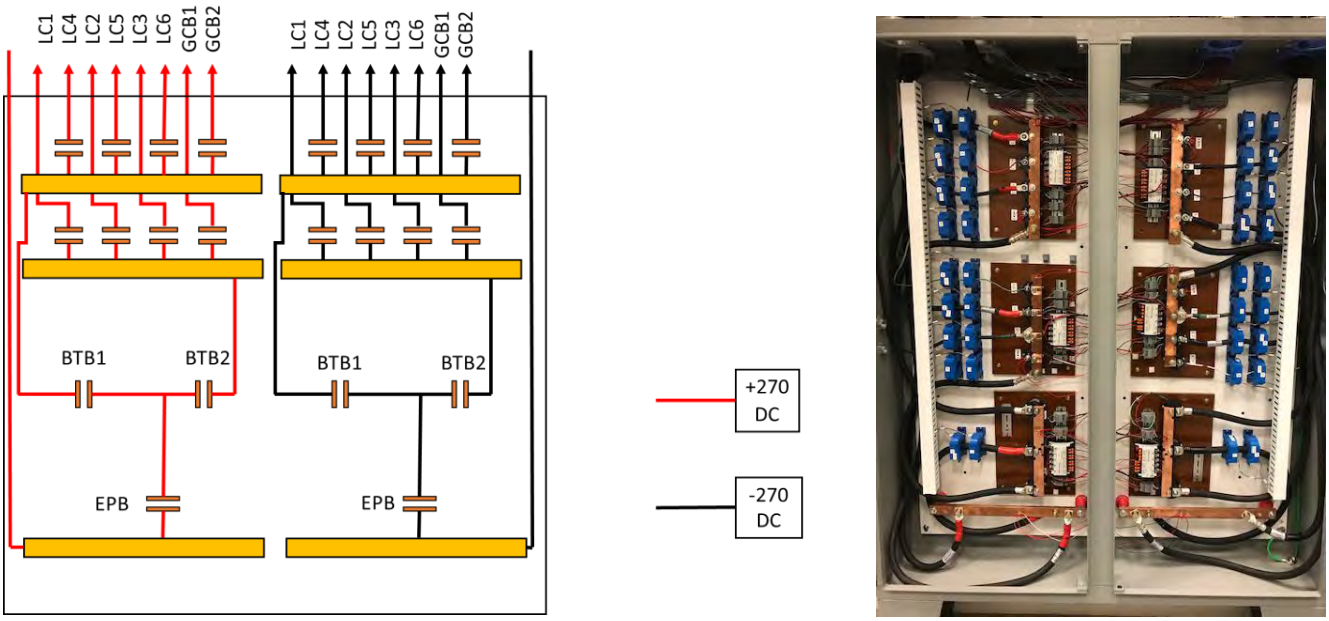

Figure 7-2 – PDP Schematic

7.3.2 Power Distribution Panel Interface Board & Data Acquisition Test Rack

The Power Distribution Panel Interface Board (PDPIB) & Data Acquisition System (DAQ) are built on the National Instruments PXI computer.

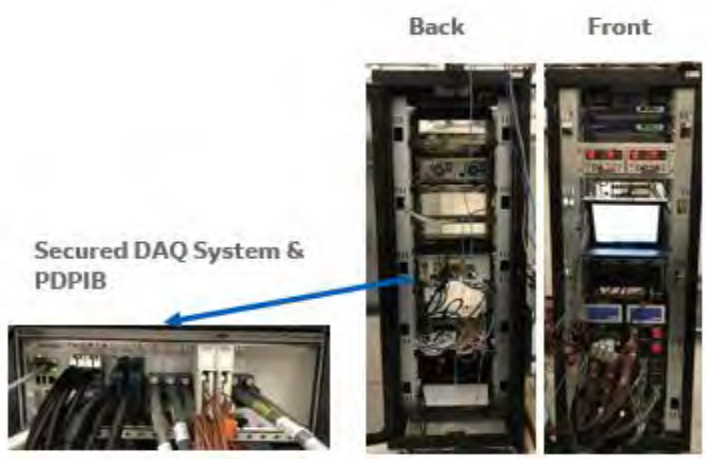

Figure 7-3 – PDPIB & DAQ Rack

7.3.2.1 Power Distribution Panel Interface Board

PDPIB Provides Actuation for Electromechanical DC Contactor in PDP, Electromechanical 3-Phase AC Switches in PCU which are controlled by SGMC. And provide feedback on Status of Contactor/Switches to SGMC. Capable of communicating with SGMC through CAN communication interface for Power flow control.

7.3.2.2 Data Acquisition System

The MESTANG Data Acquisition rack contains National Instruments PXI system designed to monitor and control the MESTANG system. The rack also contains various power supplies to provide control power for the bus system and excitation for instrumentation sensors. The rack utilizes a custom LabVIEW Graphical User Interface (GUI) developed by the Automation team at GE's EPISCenter site. The GUI allows the user to view live data in the system as well as control the follow of power through the bus system.
The National Instruments PXI chassis contains the I/O modules used to monitor and control the MESTANG system.

7.3.3 Hydraulic System

A hydraulic oil cart is used to supply conditioned oil to the stator cooling jacket and rotor cavity and bearings of the HPSG simultaneously. These oils flows are controlled independently using separate variable speed pumps fed from the same reservoir. Pressure is monitored at the oil cart and the HPSG to maintain a limitation The Data Acquisition system measures the oil flow rate, temperature and pressure of the oil before it enters the stator and rotor independently as well as the return oil temperature. After cooling or lubricating the HPSG, the oil becomes unpressurised and falls into a collection tank where it is pumped back to the oil cart. *Figure 7-5* shows the collection tank and pump. This oil returns into a heat exchanger on the oil cart to be cooled if needed before entering the reservoir where it is heated if needed and pumped back to the HPSG.

Figure 7-4 – Hydraulic Cart

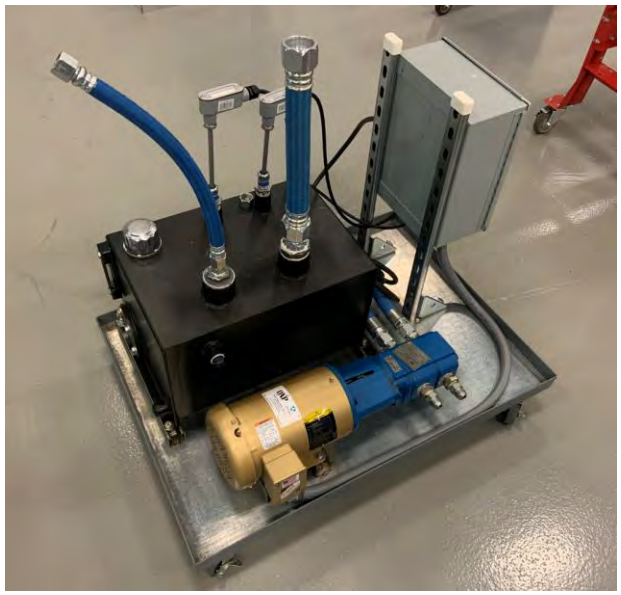

Figure 7-5 – Scavenge Cart

7.3.4 SGMC Control Panel

SGMC Control Panel consists of manual switches to control HPSG Starter mode, Generator modes, ECS loads and Emergency stop for the system.
It also contains LED lights to indicates fault flags raised during HPSG or System operation and faults in ECS loads.

Figure 7-6 – SGMC Control Panel

7.3.5 HPSG/ ECS Sensor Box

There are two sensor boxes built each for:

- Instrumentation of AC High power signals from HPSG to PCU, and Exciter power signals to HPSG
- Instrumentation of AC High power signals from PCU to ECS.

Each sensor box contains the circuitry for measuring the voltage and current values. It also contains circuitry for measuring the voltage and current values which is used for instrumenting the Exciter power signals to HPSG in the case of HPSG Sensor box.
These two sensor boxes send the sensor signals to Data Acquisition System, so that the voltage and current values can be monitored on GUI for testing and for data recording.

Figure 7-7 – HPSG/ECS Sensor Box

7.3.6 Loads

The MESTANG system utilizes a load bank to provide the capability to fully load the HPSG in generation mode. The load bank is rated to 300kW in either 270VDC or 540VDC configuration. The 300kW rating can be achieved in steps as small as 5kW. These steps can be added or subtracted such that any load between 5 and 300 kW can be achieved in 5 kW increments. The load bank is controllable remotely by an operator in the control room. Our load bank is shown *Figure 7-8*.

Figure 7-8 – Neptune Load bank

7.3.7 Automatic System Protection Circuit

In order to protect the system in case of a problem, an automatic safety relay was implemented into the HPSG excitation circuit. The safety relay was integrated with the Data Acquisition system to break excitation should any limit of a measured value be surpassed. These values can be selected in the Data Acquisition system and have their limits set depending on the expectations of test being run. Typical values that are monitored during testing include:

- Over/Under output Voltage and Current of the HPSG
- HPSG Over/Under speed

- Bearing and Stator Temperature
- Oil Supply and Return Temperature
- Oil Flow Loss
- Oil Over Pressure
- Vibration

The relay can also be opened manually by the test director should they see any value approaching limits or a dangerous situation developing.

7.4 HPSG and PCU Open Loop Testing

To verify full functionality of the HPSG it is connected to the PCU and the rest open loop system as shown in *Figure 7-9* "Open Loop" testing refers to HPSG and PCU testing without the aid of controller action. Hence in open loop configuration, the HPSG is manually excited using a AC power supply where the excitation voltage is adjusted by a Technician to maintain a constant output from the main.

In "Closed Loop" configuration the SGMC is integrated to the test, whose control algorithm automatically senses load on the HPSG and adjusts the HPSG excitation through SGMC inverters to maintain a constant output.

The below *Figure 7-9* shows the Open Loop Test block diagram. The AC output from HPSG is transferred to PCU via HPSG Sensor box. The Rectified DC output from PCU is connected to Power Distribution panel, which intern supplies power to DC loads.

HPSG Sensor box is used for instrumentation whose output is connected to Data Acquisition system (DAQ), to measure the performance of the HPSG.

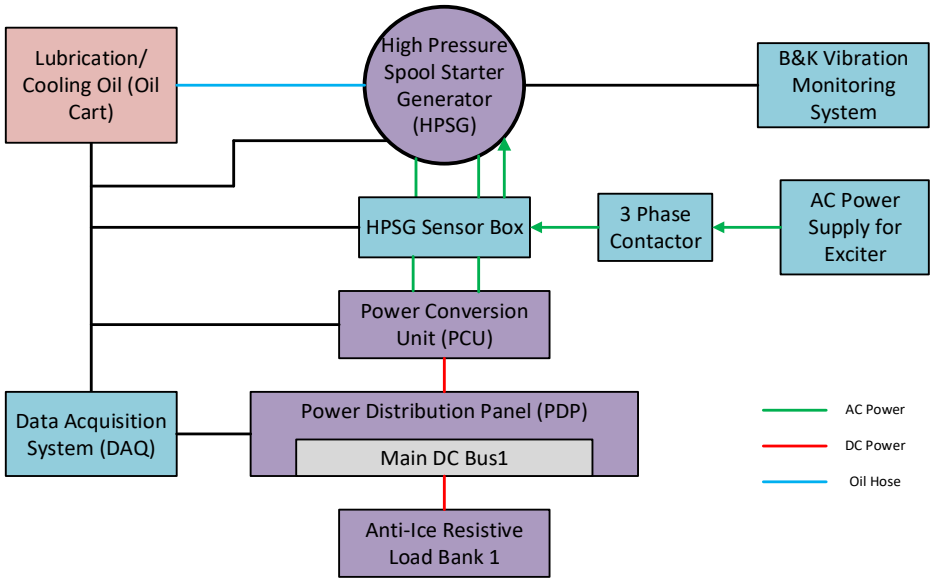

Figure 7-9 – HPSG and PCU Open Loop Test block diagram

7.5 RESULTS

MESTANG EPGS in Generator mode was the focus of the system integration testing and the test results described throughout this section are mainly for that configuration.

- Steady State Testing
- Transients Testing

7.5.1 Steady State Testing

The steady state operating conditions listed in *Table 7-1* were conducted. The output voltage was nicely regulated to (+/-270) 540 Vdc at the different loads, and all the monitored data such as windings temperatures; oil flow; temperature and pressure; vibration level; electrical voltages and currents were within limit.

Table 7-1 – Steady State Operating Conditions

Step	Load (kW)
1	0
2	40
3	60
4	80
5	100
6	120
7	150

7.5.2 Transients Testing

The transients operating conditions were conducted. The system was capable of sustaining the different load transitions and all the monitored data such as windings temperatures; oil flow, temperature and pressure; vibration level; electrical voltages and currents were within limit. Particularly, the captured DC bus voltage data was post-processed in MATLAB and compared with the Transients Specification in from the Systems Development to verify it's within the transient limit.

8 CONCLUSION

The fuel consumption analysis conducted for MEA aircraft is 6% less compared to the Baseline aircraft as per the aircraft model analysis.

- Simulation performed to show MEA technology is feasible
- Prototype design for component, sub-system, and/or system to be used for TRL5-6 testing environment completed
- Component, sub-system and/or system represent behavior in an operational environment representative of full scale
- Design drawings drafted for system incorporating finalized system requirements such that it supports prototype creation with fidelity to meet TRL6 testing requirements
- Representative System or prototype demonstrated in a laboratory environment
- Test results verify performance predictions for simulated operational environment Operating limits for components/Subsystems/applications determined
- Relationships between components and subsystems understood and satisfactory component, sub-component &/or system integration demonstrated
- Individual components, modules, subsystems tested to verify that the components, module, sub-systems and/or functions work together
- Prototypes have been tested in a relevant environment under simulated conditions and scaling issues, if any, identified and rationalize
- Prototype able to demonstrate all features and of eventual final product in a simulated operational environment