U.S. Department of Transportation
Federal Aviation Administration

Swedish Biofuel Performance Evaluation

Continuous Lower Energy, Emissions and Noise (CLEEN) Program

Submitted by Pratt & Whitney

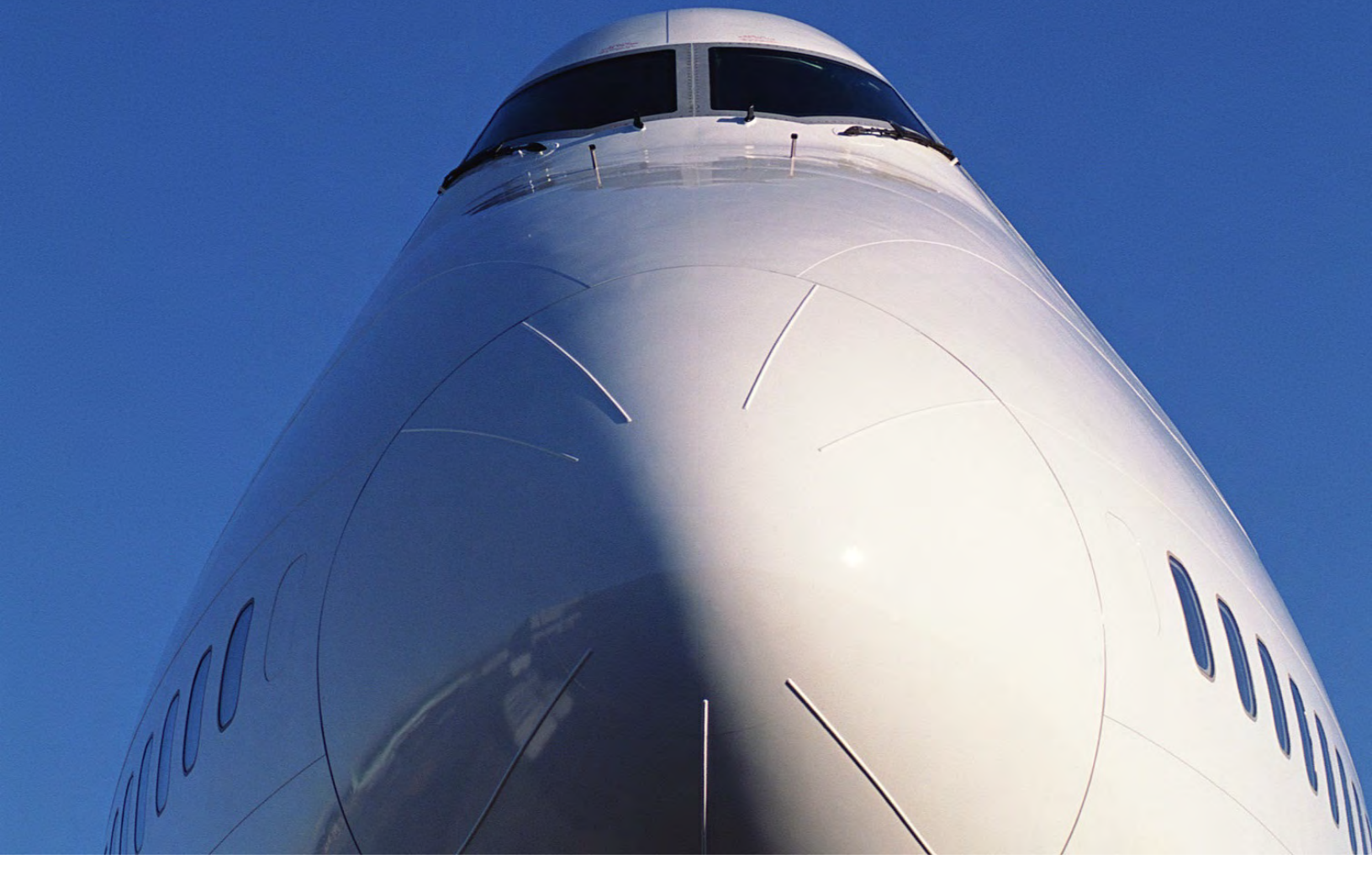

The Continuous Lower Energy, Emissions and Noise (CLEEN) Program is a Federal Aviation Administration NextGen effort to accelerate development of environmentally promising aircraft technologies and sustainable alternative fuels. The CLEEN Program is managed by the FAA's Office of Environment and Energy.

The report presented herein is the final report deliverable submitted by Pratt & Whitney for a project conducted under the CLEEN Program to Swedish BioFuel Performance Evaluation This project was conducted under FAA other transaction agreement (OTA) DTFAWA-10-C-00041. This is report is report number DOT/FAA/AEE/2016-05 by the FAA's Office of Environment and Energy.

FR-27652-4
20 May 2016

CONTINUOUS LOWER ENERGY, EMISSIONS, AND NOISE (CLEEN)

SWEDISH BIOFUEL PERFORMANCE EVALUATION

Prepared for
Federal Aviation Administration
AJA-482 Exec & Manage Supp Team
800 Independence Ave, SW
Washington DC 20591

Prepared under
Contract No. DTFAWA-10-C-00041

In Response to
CDRL No. 15

Prepared by
United Technologies Corporation
Pratt & Whitney
400 Main Street
East Hartford, CT 06118

EXPORT NOTICE

THIS DOCUMENT HAS BEEN PUBLICLY RELEASED AND IS NOT SUBJECT TO THE EAR OR ITAR

Pratt & Whitney
A United Technologies Company

Published by Business Operations Technical Writing

CONTENTS

Section		*Page*
1.	INTRODUCTION	1-1
2.	SUMMARY RESULTS	2-1
3.	CONCLUSION	3-1
4.	APPLICABLE DOCUMENTS	4-1
4.1	Hamilton Sundstrand Documents	4-1
4.2	Other Documents	4-1
5.	SCOPE	5-1
5.1	Fuel Injector Spray Characterization Test	5-1
5.2	Combustor Performance Rig Test	5-1
6.	FUELS	6-1
7.	TEST CELL SETUP	7-1
7.1	Combustor Rig Test	7-1
7.2	Fuel Nozzle Spray Test	7-3
8.	RESULTS	8-1
8.1	Combustor Rig Test	8-1
8.1.1	Pattern Factor	8-1
8.1.2	Lean Blowout	8-2
8.1.3	Gaseous Emissions	8-3
8.1.4	Lightoff	8-4
8.2	Fuel Nozzle Spray Test	8-7
8.2.1	Mean Droplet Size (D_{32}) — Line of Sight Measurement	8-7
8.2.2	Patternation	8-7
8.2.3	Sector Uniformity Index	8-9
8.2.4	Radial Fuel Distribution	8-11
8.2.5	PDI Results	8-11

THIS DOCUMENT HAS BEEN PUBLICLY RELEASED AND IS NOT SUBJECT TO THE EAR OR ITAR

FIGURES

Figure		*Page*
7-1.	Combustor Rig Test Cell Setup	7-1
7-2.	Cold Fuel Setup	7-2
7-3.	Schematic for Cold Fuel System	7-2
7-4.	Schematic of Installed Ejector for Ignition Mapping	7-2
7-5.	Schematic of Cell 6 Fuel Controls — Cold Fuel System	7-3
7-6.	Detailed Schematic Around Fuel Spray Rig	7-4
8-1.	Pattern Factor at All Test Condition	8-2
8-2.	Thermal Pattern Factor at All Test Conditions	8-2
8-3.	LBO F/A at Three Altitudes	8-3
8-4.	Emission Index NOx at Selected Conditions	8-4
8-5.	EI for CO at Selected Conditions	8-4
8-6.	EI for UHC at Selected Conditions	8-5
8-7.	SN at Selected Conditions	8-5
8-8.	Ignition Map at SL	8-6
8-9.	Ignition Map at 25,000 ft	8-6
8-10.	Ignition Map at 41,000 ft	8-7
8-11.	Fuel Droplet SMD Measurements	8-8
8-12.	Ice Built Up Near Injector Tip	8-8
8-13.	Cone Angle Definition	8-9
8-14.	Comparison of Spray Cone Angle θ_{90} (Degrees) With Ambient Fuel Temperature	8-9
8-15.	Comparison of Spray Cone Angle θ_{peak} (Degrees) With Ambient Fuel Temperature	8-10
8-16.	Schematic of a Patternator Sector	8-10
8-17.	Ambient Temperature SUI	8-10

THIS DOCUMENT HAS BEEN PUBLICLY RELEASED AND IS NOT SUBJECT TO THE EAR OR ITAR

TABLES

Table		*Page*
5-1.	Fuel Injector Spray Characterization Test Matrix	5-1
7-1.	Combustor Rig Test Conditions	7-1
7-2.	Test Plan	7-3

THIS DOCUMENT HAS BEEN PUBLICLY RELEASED AND IS NOT SUBJECT TO THE EAR OR ITAR

TERMS AND ACRONYMS

A

AFRL	Air Force Research Laboratory
ANE	Average New Engine
APU	Auxiliary Power Unit
ASTM	American Society for Testing and Materials
ATJ-SKA	Alcohol-to-Jet Synthetic Kerosene Containing Aromatics (LansaTech/Swedish Biofuels)

C

CLEEN	Continuous Lower Energy, Emissions, and Noise
CO	Carbon Monoxide
CO_2	Carbon Dioxide

D

DOD	Department of Defense

E

EI	Emissions Index

F

F/A	Fuel-to-Air Ratio
FAA	Federal Aviation Administration
ft	Feet (1 ft = 0.305 m)

I

ICAO	International Civil Aviation Organization
IP	Intellectual Property

J

JBTS	Jet Burner Test Stand

L

LBO	Lean Blowout

M

MaxGen	Maximum Generator Load
MES	Main Engine Start
MFD	Minimum Fully Deteriorated Engine

N

NO_x	Oxides of Nitrogen
NTO	No Technical Objection

O

OEM	Original Equipment Manufacturer

THIS DOCUMENT HAS BEEN PUBLICLY RELEASED AND IS NOT SUBJECT TO THE EAR OR ITAR

P

P&W	Pratt & Whitney
PDI	Particle Doppler Interferometry
PF	Pattern Factor
psi	Pounds per Square Inch
PWAP	Pratt & Whitney AeroPower

S

SL	Sea Level
SMD	Sauter Mean Diameter
SN	Smoke Number
STD	Standard Day
SUI	Sector Uniformity Index

T

T_3	Combustor Inlet Temperature

U

UHC	Unburned Hydrocarbon
UTRC	United Technologies Research Center

THIS DOCUMENT HAS BEEN PUBLICLY RELEASED AND IS NOT SUBJECT TO THE EAR OR ITAR

1. INTRODUCTION

This project was performed in support of the Federal Aviation Administration's (FAA's) Continuous Lower Energy, Emissions, and Noise (CLEEN) program. The objective of the program was to develop sufficient information to permit the issuance of a *No Technical Objection (NTO)* by Pratt & Whitney (P&W) to allow use of a 50/50 blend of Swedish Alcohol-to-Jet Synthetic Kerosene Containing Aromatics (ATJ-SKA) fuel and JP-8.

The project scope includes generation of data that can be used in an American Society for Testing and Materials (ASTM) Research Report as part of the ATJ-SKA evaluation and approval process. The evaluation and approval of ATJ-SKA is an ongoing effort by the engine and airplane original equipment manufacturers (OEMs), FAA, Department of Defense (DOD), and ASTM International. The test program included fuel injector spray characterizations and combustor performance rig tests. An existing combustor rig was used for this project that is similar in configuration to that of an auxiliary power unit (APU) with a 500 to 700 hp range and an annular reverse-flow combustor.

THIS DOCUMENT HAS BEEN PUBLICLY RELEASED AND IS NOT SUBJECT TO THE EAR OR ITAR

2. SUMMARY RESULTS

No significant difference in performance was observed in the combustor tests when comparing the 50/50 ATJ-SKA/JP-8 fuel blend to that of baseline Jet A and JP-8 fuels. Performance metrics included temperature distributions, radial profiles, and pattern factors (PFs) at combustor exit. Test result variations observed from the tests are considered to be within the measurement precision.

The combustor rig tests also showed that no significant difference in the emission levels measured for the three fuels. Emissions measured include NO_x, CO, and UHC and smoke number (SN). The variations in these indices are considered to be within the normal measurement precision.

The combustor rig ignition tests were conducted at both ambient and cold fuel temperatures and at sea level (SL); 25,000 ft; and 41,000 ft. The results show that the three fuels have similar ignition performances.

The spray quality characterizations tests were performed at ambient air temperature with both ambient and cold temperature fuels. Three fuels/fluids were tested: 50/50 ATJ-SKA/JP-8 blend, JP-8, and 7024 Type II Calibration fluid. The 7024 Type II fluid simulates Jet A behavior at ambient temperature. It is concluded that the 50/50 ATJ-SKA/JP-8 blend, JP-8, and Type II fluid all show similar spray qualities at ambient air temperature condition. Spray characterizations of cold fuels (JP-8 and 50/50 ATJ-SKA/JP-8 blend) at ambient air temperature are compromised due to significant ice buildup near injector tip, and are not included.

THIS DOCUMENT HAS BEEN PUBLICLY RELEASED AND IS NOT SUBJECT TO THE EAR OR ITAR

3. CONCLUSION

The combustor rig and fuel spray characterizations tests show that the 50/50 Swedish Biofuels ATJ-SKA/JP-8 blend behaves similarly to the JP-8 and Jet A baseline fuels. Therefore, P&W AeroPower (PWAP) has no technical objections to the use of a 50/50 ATJ-SKA/JP-8 fuel blend.

It should be noted that PWAP did not perform any evaluation on what the long-term impact would be on engine component lives. This investigation would require hardware review after several hundred hours of continuous APU operation using this fuel.

THIS DOCUMENT HAS BEEN PUBLICLY RELEASED AND IS NOT SUBJECT TO THE EAR OR ITAR

4. APPLICABLE DOCUMENTS

The following documents form a part of this report to the extent specified herein. Unless listed by date as a particular issue, the issue in effect on the date of this report shall be applicable. In the event of conflict between documents referenced herein and the contents of this procedure, the contents of this procedure shall be a superseding requirement.

4.1 HAMILTON SUNDSTRAND DOCUMENTS

EPS271-10	Combustor Rig Configuration
SB No. 2016	Pratt & Whitney Service Bulletin

4.2 OTHER DOCUMENTS

ASTM D1655	Standard Specification for Aviation Turbine Fuels
ASTM D4054	Standard Practice for Qualification and Approval of New Aviation Turbine Fuels and Fuel Additives
ARP1179	Aircraft Gas Turbine Engine Exhaust Smoke Measurement
ARP1256	Procedure for the Continuous Sampling and Measurement of Gaseous Emissions from Aircraft Turbine Engines
ARP1533	Procedure for the Calculation of Gaseous Emissions From Aircraft Turbine Engines

THIS DOCUMENT HAS BEEN PUBLICLY RELEASED AND IS NOT SUBJECT TO THE EAR OR ITAR

5. SCOPE

The T-62T-46LC-1 APU was developed by PWAP in the late 1990s. It is flight-essential equipment for Saab aircraft applications. The combustion system consists of an annular reverse flow combustor with a combination of pressure-atomized pilot and airblast main fuel injectors.

The test program included spray characterizations of production quality pilot fuel injectors and fuel system components, conducted on a combustor rig. Fuels used included a baseline JP-8, a 50/50 ATJ-SKA/JP-8 blend, Jet-A, and a calibration fluid (7024). These tests were conducted at the United Technologies Research Center (UTRC) in East Hartford, Connecticut.

The baseline JP-8 fuel and the 50/50 ATJ-SKA/JP-8 blend were provided by the Air Force Research Laboratory (AFRL). 300 gallons of each fuel were shipped directly to UTRC from AFRL.

5.1 FUEL INJECTOR SPRAY CHARACTERIZATION TEST

Spray characterization tests of the pilot injector was performed at ambient air temperature with the fuels and/or fluids and fuel temperatures detailed in ***Table 5-1***.

Table 5-1. *Fuel Injector Spray Characterization Test Matrix*

Fuel/Fluids	*Fuel at Ambient*	*Fuel at -40 ºC (-40 ºF)*
JP-8	✓	✓
50/50 ATJ-SKA/JP-8 Blend	✓	✓
7024 Type II Calibration Fluid	✓	-
Viscor	✓	-

5.2 COMBUSTOR PERFORMANCE RIG TEST

The combustor rig performance tests consist of two major areas:

- Performance test at normal operating conditions
- Cold temperature fuel ignition test.

An existing PWAP APU combustor rig was used for the rig testing. This combustion system is similar to that of the T-62T-46LC-1, and conclusions regarding the system behavior can be applied to the T-62T-46LC-1. The use of this rig reduced program cost and supported the testing schedule.

Combustor performance testing was conducted for nine conditions covering altitudes from SL to 41,000 ft, engine loads from no load, maximum generator load (MaxGen only), and main engine start (MES). Combustor pattern factors, radial profiles, and emissions were measured for JP-8, ATJ-SKA/JP8 fuel blend, and Jet-A fuels. Combustor lean blowout (LBO) fuel/air ratio was determined at two altitudes for lean stability performance. The test fuels were at ambient temperature.

Ignition tests were conducted over a range of conditions covering altitudes from SL to 41,000 ft with both ambient and cold fuel (-40 ºC) temperatures. During the test, combustor inlet air flowrate was set to simulate low-speed engine airflow conditions. Fuel was then introduced at different fuel pressures through the pilot injectors. Lean ignition limit was determined when the pilot fuel pressure was low enough to cause no lights or significantly delayed lights at the given airflow conditions.

THIS DOCUMENT HAS BEEN PUBLICLY RELEASED AND IS NOT SUBJECT TO THE EAR OR ITAR

6. FUELS

A 50/50 ATJ-SKA/JP-8 blend was investigated. Baseline fuels included JP-8 and Jet A.

THIS DOCUMENT HAS BEEN PUBLICLY RELEASED AND IS NOT SUBJECT TO THE EAR OR ITAR

7. TEST CELL SETUP

7.1 COMBUSTOR RIG TEST

Tests were performed at UTRC in East Hartford, Connecticut. The combustor test rig was set up in Test Cell 5 at the Jet Burner Test Stand (JBTS). ***Figure 7-1*** shows the setup in the test cell. Nine test conditions are summarized in ***Table 7-1***.

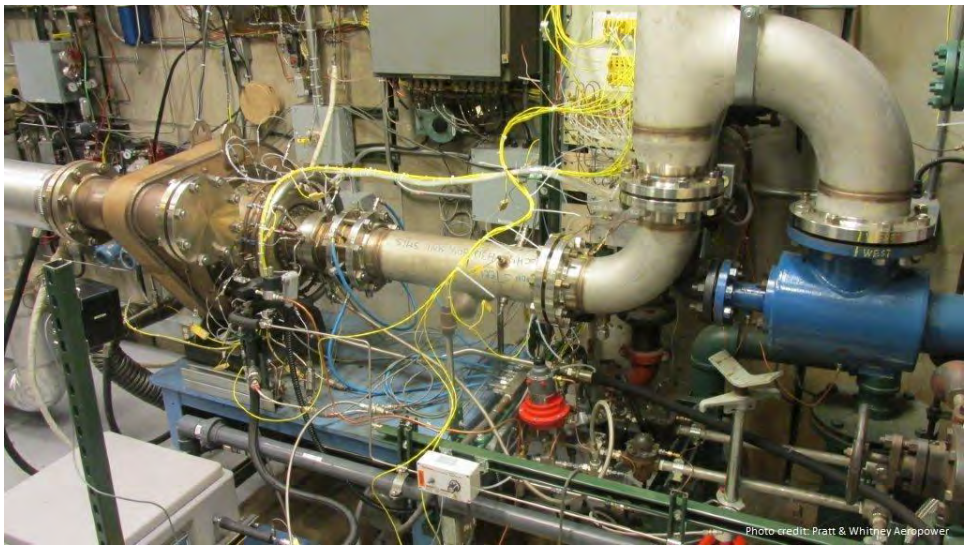

Figure 7-1. *Combustor Rig Test Cell Setup*

Table 7-1. *Combustor Rig Test Conditions*

	No. 1	***No. 2***	***No. 3a***	***No. 4***	***No. 5***	***No. 6b***	***No. 7***	***No. 9***	***No. 10A***
Engine Condition	ANE	ANE	MFD	ANE	ANE	MFD	ANE	MFD	MFD
Day	Cold	STD	STD	Hot	STD	Cold	Hot	Hot	Hot
Altitude	SL	SL	SL	20,000 ft	20,000 ft	20,000 ft	40,000 ft	40,000 ft	40,000 ft
Ambient Temperature (ºF)	-69	59	59	51	-12	-90.5	-6	-6	-6
Engine Load	NL	MaxGen only	MES	NL	MaxGen only	MES (reduced F/A)	NL	NL	MaxGen (red. F/A)

Abbreviations used in ***Table 7-1*** are defined in the Terms and Acronyms list in the front matter of this report. Note that MES refers to a condition of reduced fuel-to-air ratio (F/A). This condition was selected due to a concern that actual flame temperatures may damage the thermal couples and rig hardware. A similar condition was selected for MaxGen.

The fuels were chilled down to -40°F (-40°C) for cold fuel ignition and spray characterization tests. For this purpose, fuel was routed through a chiller filled with dry ice. The setup for chilling down the fuels is shown in ***Figure 7-2***. A schematic of this setup is shown in ***Figure 7-3***.

It was necessary to install an ejector at the exhaust flange for ignition tests at altitude conditions where the ambient pressure is sub-atmospheric. The same is true for steady state operation at really high altitudes. A schematic for this setup is shown in ***Figure 7-4***.

Figure 7-2. *Cold Fuel Setup*

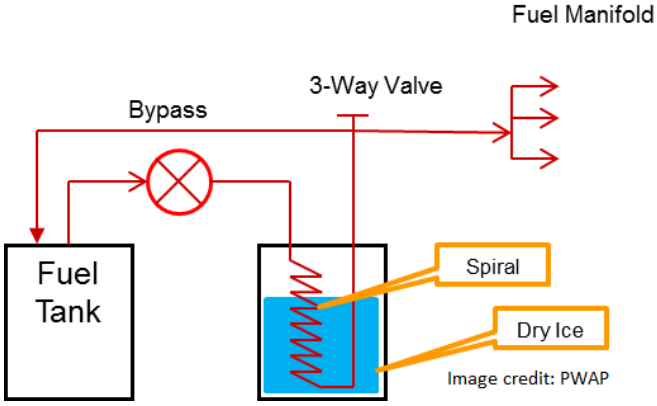

Figure 7-3. *Schematic for Cold Fuel System*

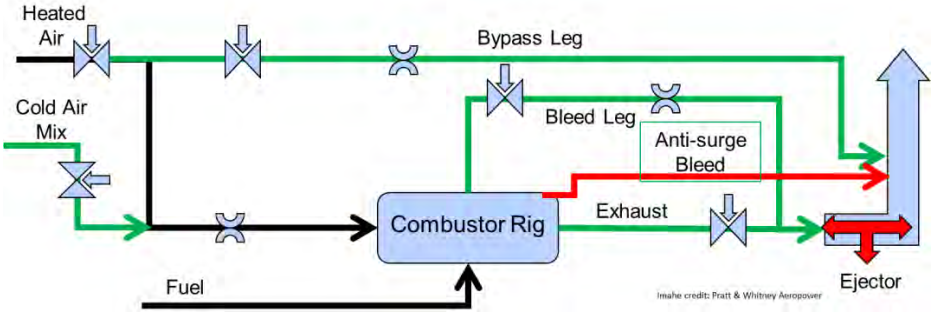

Figure 7-4. *Schematic of Installed Ejector for Ignition Mapping*

7.2 FUEL NOZZLE SPRAY TEST

Spray quality characterization tests of the pilot injector were conducted at ambient air temperature using both ambient and cold fuels (-40°C [-40°F]). The spray test plan is shown in ***Table 7-2***.

Droplet size measurement (Malvern), patternation, and particle doppler interferometry (PDI) measurements for spray quality were performed at 1.1 in. from the nozzle tip. Fuel injection pressure varied from 100 to 400 psi. Cold fuel spray was only tested at 200 psi.

A schematic of a spray rig setup with fuel control is shown in ***Figures 7-5*** and ***7-6***. During a spray test, a fuel pump drew fuel from a fuel drum at ambient temperature, and pumped it through filter, valves, and a flow meter. In

Table 7-2. *Test Plan*

Test ID	Injector	Fluid	Temperature	Test	Pressure
1	1	JP-8	Ambient	PDI	200
2	1	ATJ Blend	Ambient	PDI	200
3	1	7024 Type II	Ambient	PDI	200
4	1	Viscor	Ambient	PDI	200
6	1	JP-8	-40	PDI	200
7	1	ATJ Blend	-40	PDI	200
9	1	JP-8	Ambient	Patternation	200
10	1	ATJ Blend	Ambient	Patternation	200
11	1	7024 Type II	Ambient	Patternation	200
12	1	Viscor	Ambient	Patternation	200
14	1	JP-8	-40	Patternation	200
15	1	ATJ Blend	-40	Patternation	200
14	1	JP-8	Ambient	Malvern	200
15	1	ATJ Blend	Ambient	Malvern	200
16	1	7024 Type II	Ambient	Malvern	200
17	1	Viscor	Ambient	Malvern	200
19	1	JP-8	-40	Malvern	200
20	1	ATJ Blend	-40	Malvern	200
22	1	JP-8	Ambient	Malvern	100
23	1	ATJ Blend	Ambient	Malvern	100
24	1	7024 Type II	Ambient	Malvern	100
25	1	Viscor	Ambient	Malvern	100
27	1	JP-8	Ambient	Malvern	300
28	1	ATJ Blend	Ambient	Malvern	300
29	1	7024 Type II	Ambient	Malvern	300
30	1	Viscor	Ambient	Malvern	300
32	1	JP-8	Ambient	Malvern	400
33	1	ATJ Blend	Ambient	Malvern	400
34	1	7024 Type II	Ambient	Malvern	400
35	1	Viscor	Ambient	Malvern	400

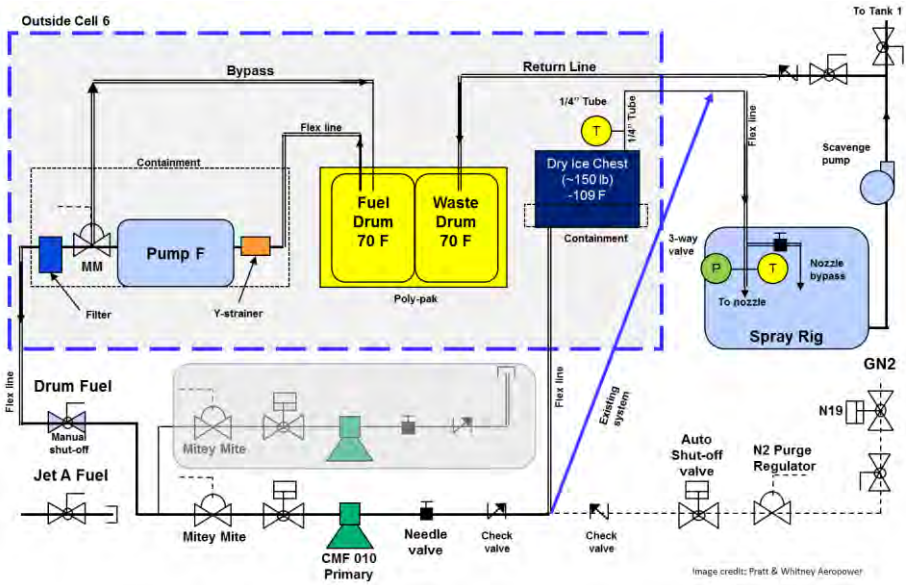

Figure 7-5. *Schematic of Cell 6 Fuel Controls — Cold Fuel System*

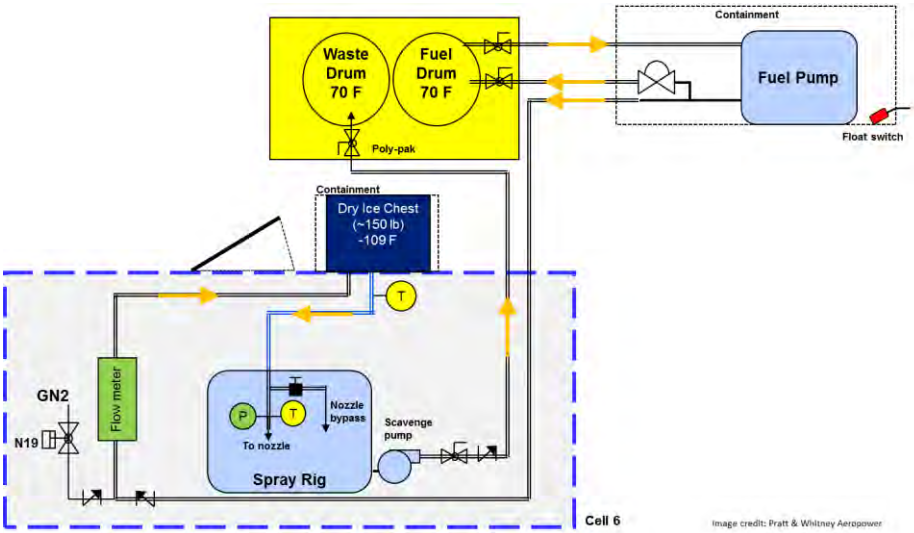

Figure 7-6. *Detailed Schematic Around Fuel Spray Rig*

the case of the ambient fuel spray test, fuel went through injector and sprayed into air. For the cold fuel spray test, an ice-cooled chiller was installed before the injector to minimize the heat transfer to the cold fuel. The lines to the fuel injectors were insulated. The air temperature was at ambient during the spray tests. Ideally, the air should have been cooled to the same cold temperature as the cold fuel to prevent water condensation and ice buildup. This was not feasible, due to the limitations of the facility and cost.

8. RESULTS

Results of combustor performance and spray quality characterization are discussed in this section. The combustor rig test included measuring temperature distribution; determining radial profile (not included in this report due to IP concerns) and pattern factor at the exit of the combustor; measuring gaseous NO_x, CO, and UHC emission levels as well as SNs; and determining LBO F/A and lightoff domain boundaries. Three fuels were used: JP-8, Jet A, and 50/50 ATJ-SKA/JP-8 blend. Ignition maps were determined at SL; 25,000 ft; and 41,000 ft.

8.1 COMBUSTOR RIG TEST

Before combustor performance testing was conducted, the rig was first checked out for any potential issues (mechanical or instrumentation) using fuel from a facility fuel tank. Any problematic areas identified in this step were fixed before proceeding to the measurement. To heat up the air to a required combustor inlet temperature (T_3), it takes approximately 30 minutes to achieve and stabilize the required temperature value. This is also the case when transitioning from one condition to another (e.g., from NL to MES). This would be a problem if using the 50/50 ATJ-SKA/JP-8 blend fuel in this process due to its limited quantity. To circumvent this problem, the fuel supply to the injector was designed to switch back and forth between the facility fuel tank (about 6,000 gallons of Jet A) and an accumulator, which holds about 90 gallons of fuel. Jet A fuel from facility tank was used during the time period required to reach temperature and stabilize. After the test temperature was achieved and stabilized, the fuel supply was switched to the accumulator and normal measurement steps were followed. Gas temperature was measured using 10 thermocouples radially stacked on two rotating arms 180 degrees apart. The rotating arms perform a 180-degree traverse during measurement and record a temperature value every 3 degrees of rotation. Data recorded in this way can be used to generate temperature contours and radial profiles (i.e., circumferential average value at each radial location). These data reductions provide different ways of understanding the combustion process within the combustor.

8.1.1 Pattern Factor

PF is a value that is used to quantify a hot spot in terms of overall temperature rise at the combustor exit. Equation No. 1 defines PF. T_{4ave}–T_{3ave} is the overall combustor temperature rise due to the burning of fuel. T_{4max} is the measured maximum gas temperature at the combustor exit.

$$PF = \frac{T_{4max} - T_{4avg}}{T_{4avg} - T_{3avg}} \qquad \textit{Equation 1}$$

Figure 8-1 shows the PF comparisons of Jet A, JP-8, and the 50/50 ATJ-SKA/JP-8 blend. The actual data values have been normalized to protect company proprietary information. PF values for the ATJ-SKA/JP-8 blend were obtained at all nine conditions. Those of Jet A and JP-8 were obtained only at seven and six of nine conditions, respectively. However, where a comparison between ATJ-SKA/JP-8 blend and a baseline fuel is available, it can be seen that the blended fuel has a very similar PF value with that of the baseline fuel.

Temperature contours and radial profiles of the three fuels were also compared, but are not included in the report for IP reasons. The comparison showed that those contours and profiles are nearly identical at the measured conditions. No significant differences can be seen.

A thermal pattern factor is another frequently used PF quantity, and is defined by Equation No. 2.

$$PF = \frac{T_{4max} - T_{4\,thermo}}{T_{4\,thermo} - T_{3avg}} \qquad \textit{Equation 2}$$

In this equation, instead of using a measured T4ave, a thermodynamic temperature value T4 thermo is used. This value is calculated as the adiabatic temperature rise at a given F/A and combustor inlet air temperature T3ave.

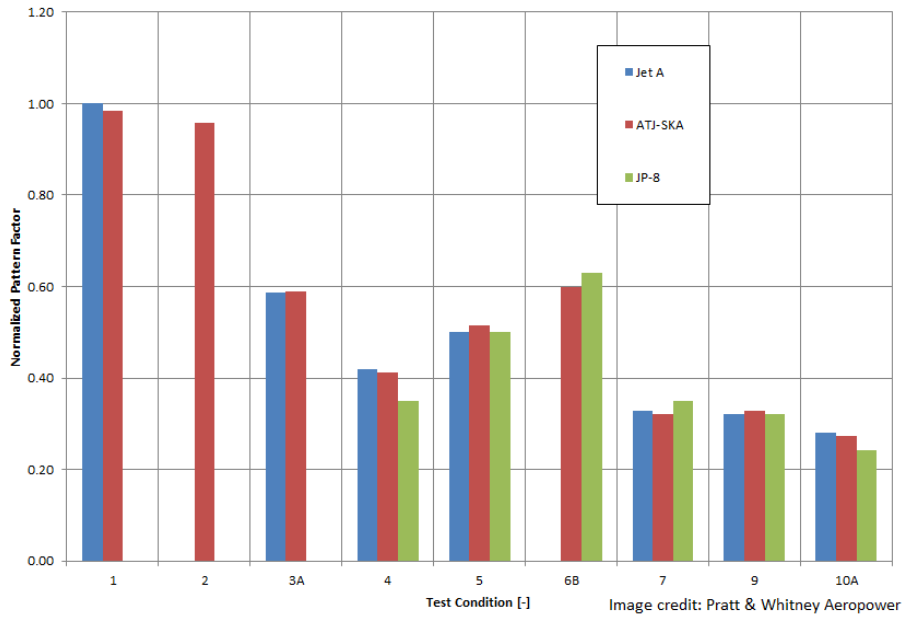

Figure 8-1. *Pattern Factor at All Test Condition*

The comparison of the thermal PF values of the three test fuels is shown in ***Figure 8-2***. As with the regular patter factor, the ATJ-SKA/JP-8 fuel blend has similar values with baseline Jet A and JP-8 fuels.

8.1.2 Lean Blowout

LBO is the F/A at the lean limit of combustion, below which combustion is not sustainable. During a rig test, the LBO F/A is established by setting an airflow rate and slowly reducing the fuel flow (or fuel pressure) until a significant temperature drop is observed. This means that the flame in the combustor is extinguished. The lower the LBO F/A, the wider stability margin a combustor has at its lean boundary. ***Figure 8-3*** compares the LBO F/A of the three tested fuels at three altitudes. The LBO F/A of the ATJ-SKA/JP-8 fuel blend was measured at SL; 20,000; and 40,000 feet. JP-8 was measured at 20,000 and 40,000 feet. Jet A was measured at SL only. As there is not a big difference between JP-8 and Jet A fuels, we concluded that the ATJ-SKA/JP-8 fuel blend has similar LBO performance to that of Jet A and/or JP-8 at all three altitudes.

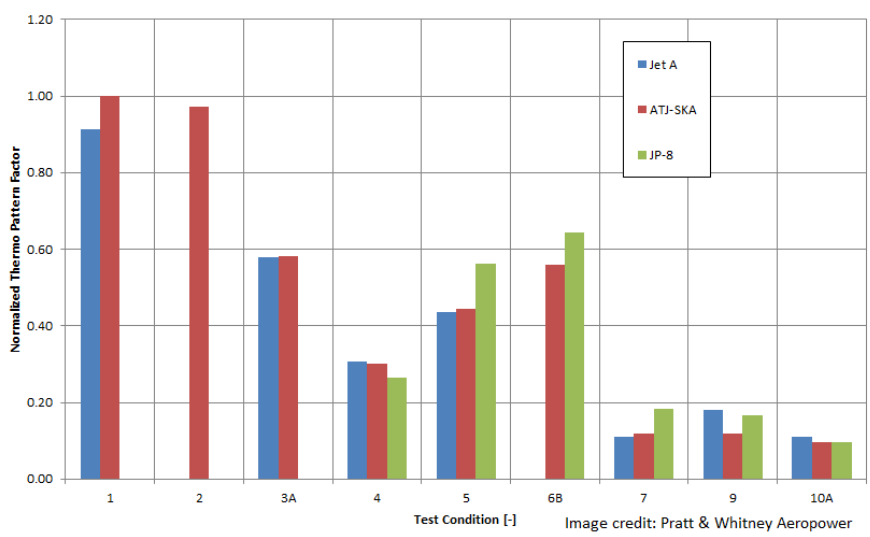

Figure 8-2. *Thermal Pattern Factor at All Test Conditions*

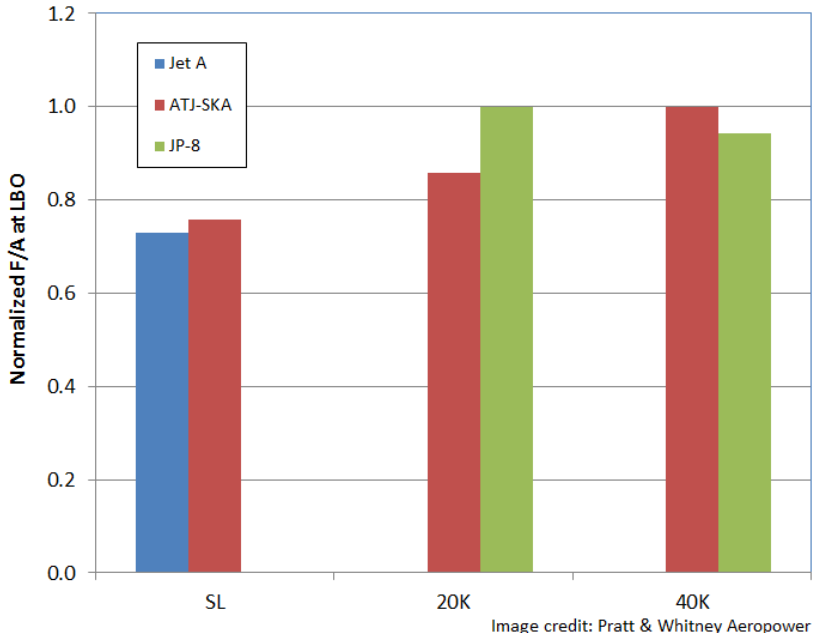

Figure 8-3. *LBO F/A at Three Altitudes*

8.1.3 Gaseous Emissions

Gaseous emissions are closely related to droplet evaporation, fuel vapor and air mixing, combustion kinetics, and other processes in the combustor. The measured gaseous emissions are presented as Emission Indices (EIs) of carbon dioxide (CO_2), CO, NO_x, UHC, and SN. The measurement procedure followed the standard International Civil Aviation Organization (ICAO) Annex 16, ARP1256 for CO_2, CO, NO_x, and UHC. The raw data was converted to emission index (EI) following ARP1533 standard procedure. The measurement of the smoke number followed standard procedure ARP1179. A smaller emission index value and smoke number indicates cleaner combustion. To protect company proprietary information all data have been normalized.

During emission measurement tests, the emission equipment was not functioning properly for Conditions 1, 2, and 3 when using JP-8 fuel. For these test conditions no emission data is available. The gaseous emission level measurements of the 50/50 ATJ-SKA/JP-8 fuel blend yielded insignificant differences compared to the two baseline fuels. A comparison of emissions for each pollutant is presented in ***Figures 8-4*** through ***8-6***.

Nitrogen Oxides (NO_x) Emissions

Results of the NO_x measurements are shown in ***Figure 8-4***. NO_x emission of the ATJ-SKA/JP-8 blend is measured at all nine conditions. Jet A and JP-8 were measured at conditions four and three, respectively. The NO_x emission of the ATJ-SKA fuel blend is at the same level as Jet A and JP-8. We concluded that the ATJ-SKA/JP-8 blend has similar NO_x emissions as the baseline fuels.

Carbon Monoxide Emissions

Figure 8-5 shows the CO emission measurement. It can be seen that the ATJ-SKA/JP-8 fuel blend has a similar EI to that of Jet A and JP-8 fuels.

Unburned Hydrocarbon (UHC) Emissions

Figure 8-6 shows the measured unburned hydrocarbon fuels. At Condition 1, Jet A fuel has a significantly higher UHC emission than that of the ATJ-SKA/JP-8 fuel blend. Considering the CO emission comparison between Jet A and the 50/50 ATJ-SKA/JP-8 blended fuel, it is possible that the blended fuel has a much lower emission than the baseline fuel at this same condition. Unfortunately, this cannot be confirmed since JP-8 fuel was not measured at this specific condition. Excluding condition 1, we can conclude that the blend fuel has similar UHC emission levels as the baseline fuels.

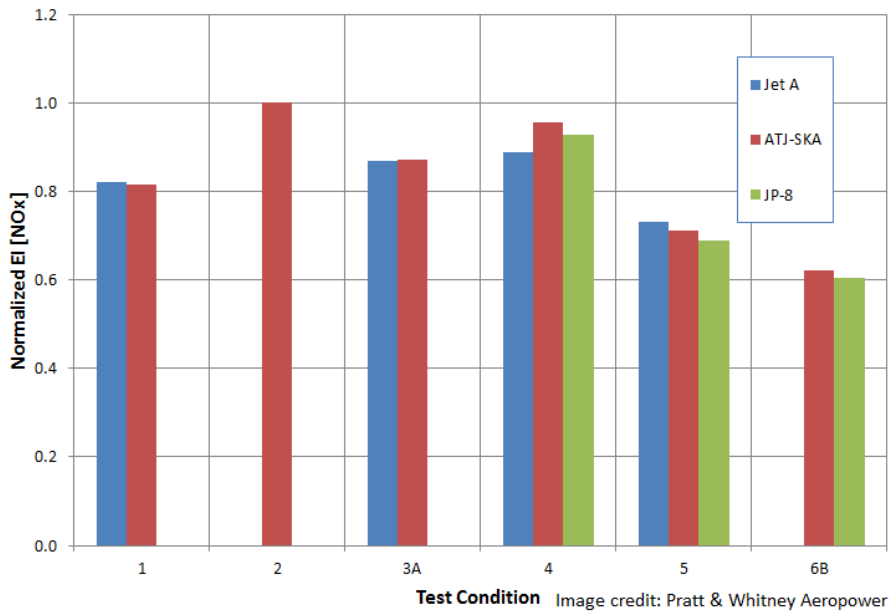

Figure 8-4. *Emission Index NO_x at Selected Conditions*

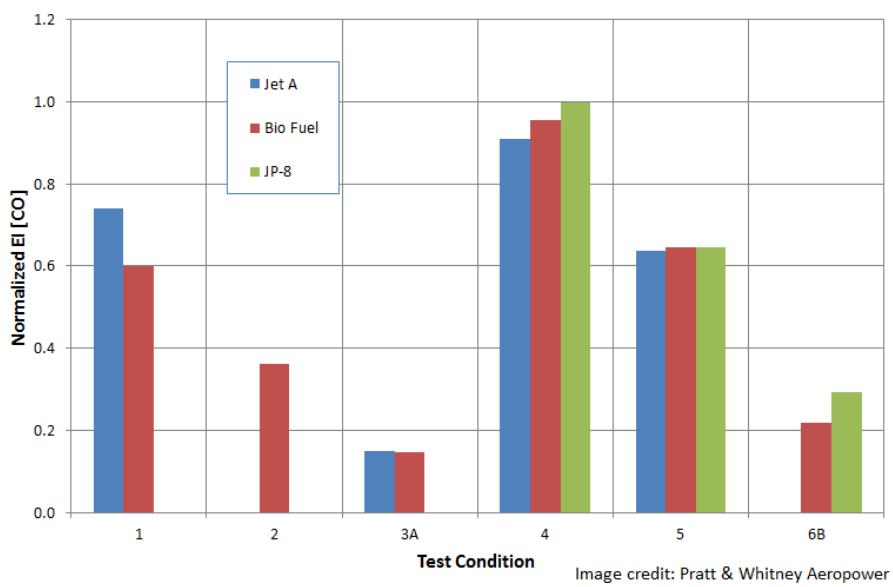

Figure 8-5. *EI for CO at Selected Conditions*

Smoke Number

SN is defined as the reflectivity of a filter paper after a certain amount of exhaust gases has flowed through it. SN has been measured at four conditions for all three fuels. As can be seen from ***Figure 8-7***, the smoke number measured for the ATJ-SKA/JP-8 fuel blend is consistently less compared to either of the baseline fuels.

8.1.4 Lightoff

Ignition tests were conducted at three altitudes using fuels at both ambient and cold temperatures (-40ºC/ -40°F). During the test, combustor inlet airflow was set to simulate a low-speed engine airflow condition. Fuel was then introduced at different injection pressures through the pilot injectors. A lean ignition limit is determined when the pilot fuel pressure is low enough to cause no-lights or significantly delayed lights at the given airflow conditions.

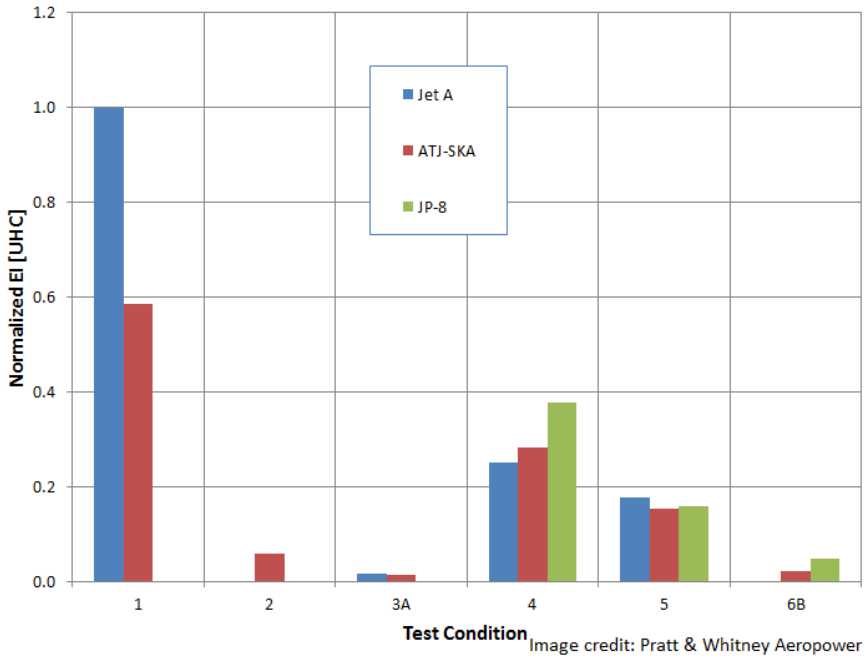

Figure 8-6. *EI for UHC at Selected Conditions*

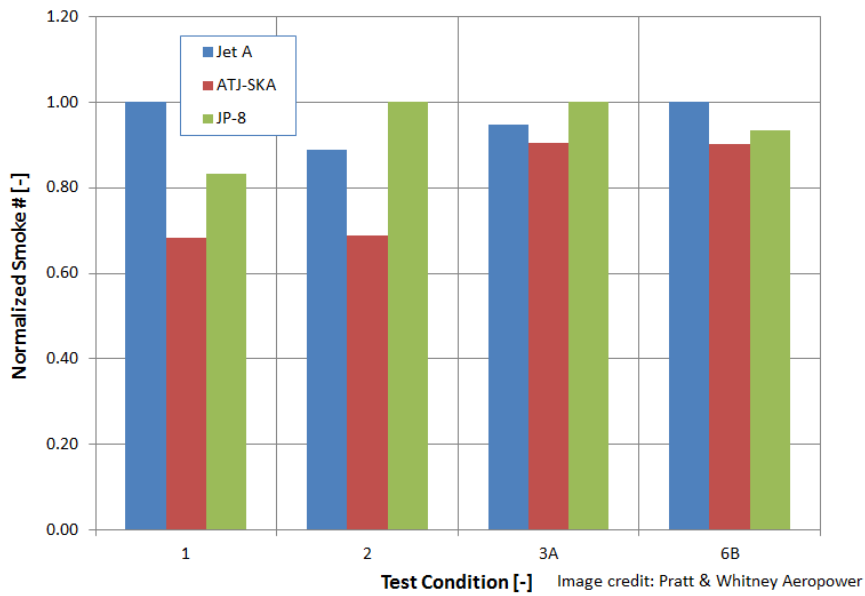

Figure 8-7. *SN at Selected Conditions*

Ignition maps are determined by identifying domains of *lightoff* and *no-light* data points for different fuel and air flows at a given altitude condition. Ignition maps are generally presented as fuel flowrate versus combustor reference velocity. For proprietary information reasons, all data have been normalized.

Figure 8-8 shows lightoff and no-light data points for the 50/50 ATJ-SKA/JP-8 blend, JP-8, and Jet A fuels at SL. A green solid symbol represents a successful lightoff and a red open symbol represents a no-light. Generally, for a given air velocity, the lower the fuel flowrate that a combustor can light off successfully, the better ignition capability of the combustor. For a given fuel flowrate, a higher air velocity yielding a successful lightoff, the better the ignition capability is of the combustor.

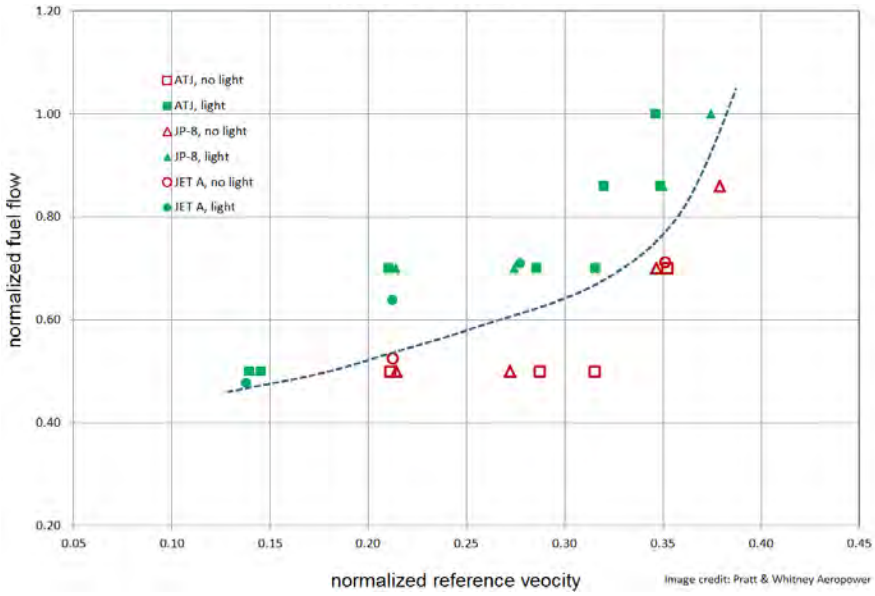

Figure 8-8. *Ignition Map at SL*

To identify the ignition boundary of a fuel, one can draw an imaginary curve to separate the lightoff and no-light data points as is shown in ***Figure 8-8***. As can be seen, this same curve also separates lightoff and no-light data points for JP-8 and ATJ-SKA blend fuels. This implies that the three fuels have similar boundaries. Therefore, we conclude that the ATJ-SKA/JP-8 blend fuel has similar ignition capability with baseline fuels (Jet A and JP-8) at SL.

The ignition map of the three fuels at 25,000 ft is shown in ***Figure 8-9***. As with the ignition map at SL, if one draws a curve to separate lightoff and no-light data points for Jet A fuel, it will also separate the lightoff and no-light data points for the other two fuels. In this particular case, there are some slight crossovers of points (i.e., one fuel's success lightoff points fall into another fuel's failed domain). These slight crossovers occur only in the vicinity of the boundary curve, and may be attributed to the accuracy of the measurement.

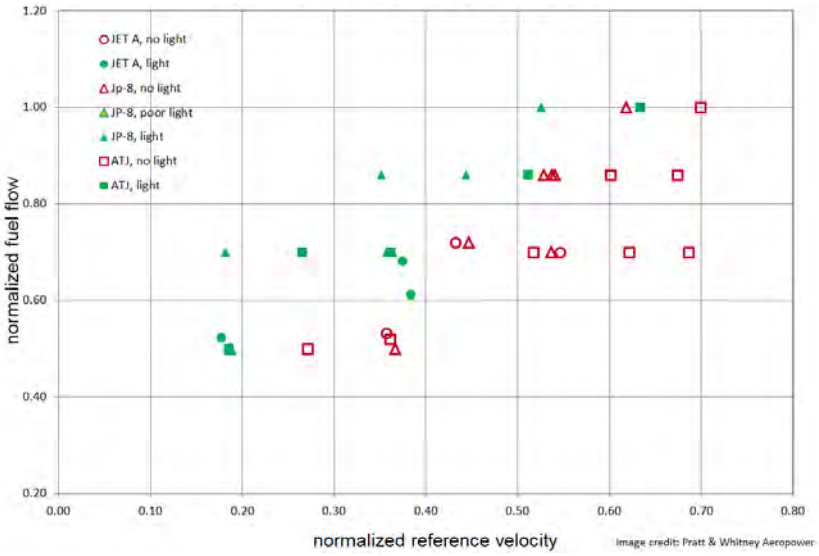

Figure 8-9. *Ignition Map at 25,000 ft*

Figure 8-10 shows a similar ignition map at 41,000 ft. All three fuels have poor lightoff performance at this altitude. Although there are very few data points, there are no conditions that appear to overlap. Based on this data, we concluded that the three fuels have a similar ignition performance at 41,000 ft, and the ATJ-SKA/JP-8 fuel blend has a similar ignition performance to that of baseline fuels at all three altitudes.

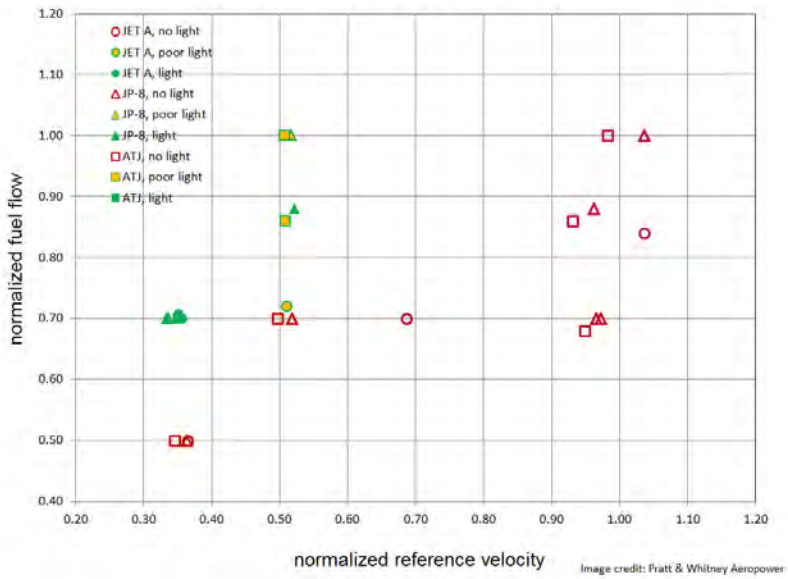

Figure 8-10. *Ignition Map at 41,000 ft*

8.2 FUEL NOZZLE SPRAY TEST

The purpose of a fuel spray test is to determine its quality by a measuring few key metrics. These include cone angle, mean droplet size and velocity, flow uniformity, and radial and circumferential distributions of flow.

8.2.1 Mean Droplet Size (D_{32}) — Line of Sight Measurement

The mean droplet size of a spray is measured by a method called Line of Sight. The mean diameter is usually presented as D_{32}. This diameter (D_{32}) is also called Sauter Mean Diameter (SMD), which gauges how fast, on average, droplets in a spray evaporate. A spray with a larger SMD will take a longer time to evaporate. A droplet with a diameter the same as the SMD of a spray has the same volume/surface area ratio as that of the spray.

The variations of SMD as a function of fuel injection pressure for the ATJ-SKA blend, the JP-8 fuel and a 7024 Type II calibration fluid are shown in ***Figure 8-11***. The calibration fluid simulates Jet A's spray behavior closely at ambient temperature. A higher injection pressure produces more fine fuel droplets; therefore, a smaller SMD for the spray. These spray tests were conducted at ambient fuel temperatures and ambient air temperatures. ***Figure 8-11*** shows that the three fuels have similar mean droplet size at four different injection pressures.

8.2.2 Patternation

The patternation test measures spray cone angles, and radial and circumferential droplet flow distributions. Traditionally, during such a test a round patternator is placed under the injector tip at a specified distance to collect fuel. The patternator is usually divided into many cells to record fuel droplet locations. With newer technology, fuel droplet concentrations are measured on a plane at 1.1 in. away from injector tip, no collector is necessary. The tests included patternation measurements for three fuels/fluids (JP-8, the ATJ-SKA/JP-8 fuel blend, and 7024 Type II) at ambient and -40°F (-40°C) fuel temperatures. Both ambient and cold fuel tests were to be performed at an ambient air temperature.

During cold fuel testing, water condensation on the injector body caused ice to build up near the injector tip as shown in ***Figure 8-12***. The ice accumulation compromised the test results for the spray cone angle, flowrate, and

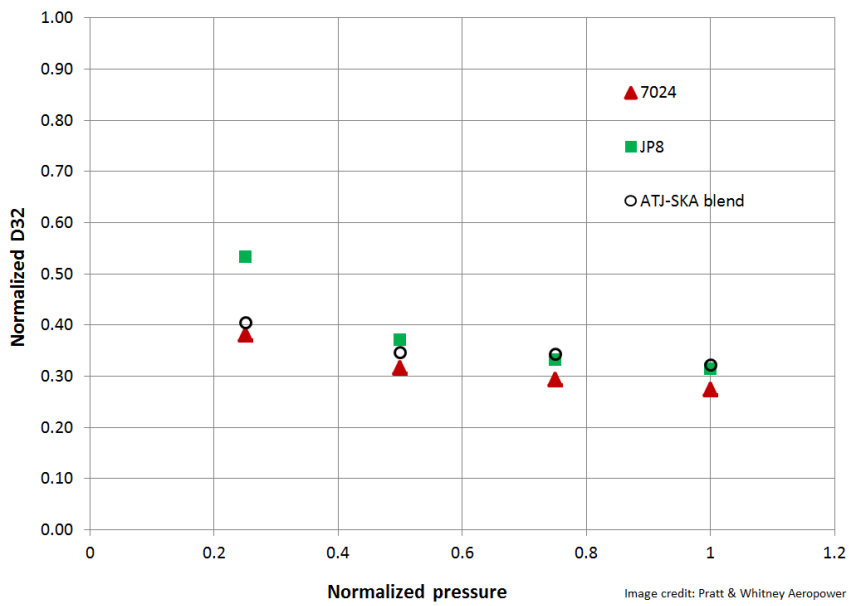

Figure 8-11. *Fuel Droplet SMD Measurements*

Figure 8-12. *Ice Built Up Near Injector Tip*

the radial and circumferential droplet flow distributions. Consequently, the cold spray results are not included in this report.

Figure 8-13 shows a schematic of a spray cone forming at the injector tip and its radial fuel volume flow distribution. Quantities of interests are the angles θ_{90} (degrees) and θ_{peak} (degrees), which are defined in Equation No. 3 below. θ_{peak} (degrees) is the angle where the fuel droplet flowrate peaks in the whole fuel spray, and θ_{90} (degrees) is the angle which includes 90 percent of fuel volume flow of the spray. These quantities are calculated from a measurement of r_{90} (a radius which includes 90 percent of its total volume flow) and r_{peak} (a radius at which fuel flowrate is highest).

For the fuel injector used in the test, $r_f = 0$ and H = 1.1 in.

$$\theta_{peak}(\text{deg}) = \frac{360}{\pi} tan^{-1}\left(\frac{r_{peak} - r_f}{H}\right) \qquad \theta_{90}(\text{deg}) = \frac{360}{\pi} tan^{-1}\left(\frac{r_{90} - r_f}{H}\right) \quad \textit{Equation 3}$$

Figure 8-14 shows the measured cone angle θ_{90} (degrees) of the three fuels (JP-8, the 50/50 ATJ-SKA blend, 7024 calibration fluid) at ambient temperature. It can be seen that the cone angles of the three fuels agree reasonably well with each other. A similar conclusion can be reached for peak cone angles θ_{peak} (degrees) (***Figure 8-15***).

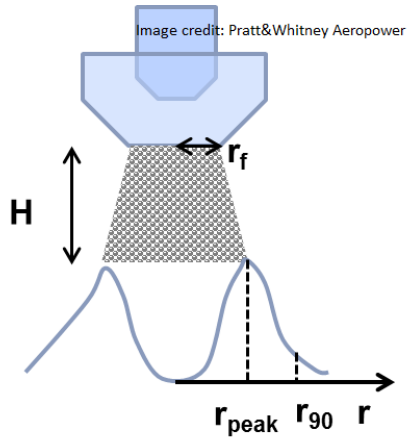

Figure 8-13. *Cone Angle Definition*

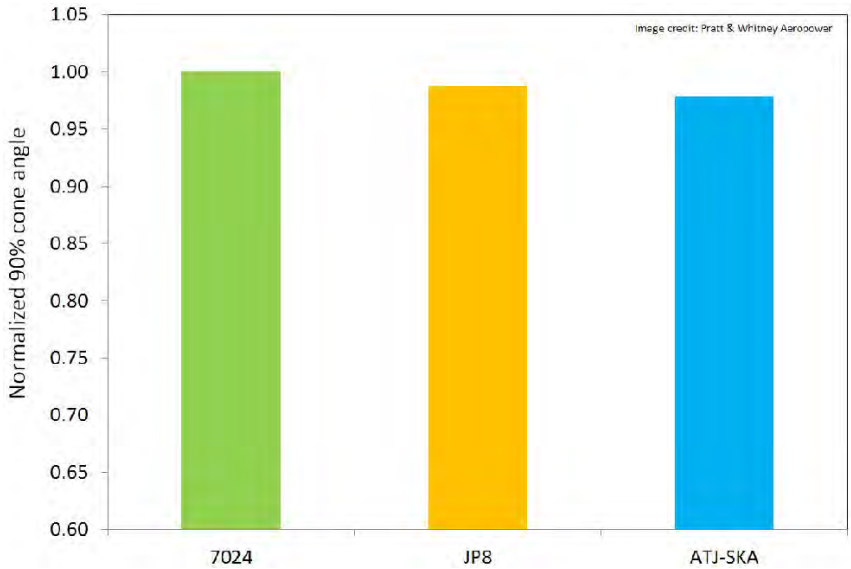

Figure 8-14. *Comparison of Spray Cone Angle θ_{90} (Degrees) With Ambient Fuel Temperature*

8.2.3 Sector Uniformity Index

The Sector Uniformity Index (SUI) of the spray is defined in Equation No. 4. ***Figure 8-16*** shows a sketch of a typical patternator sector and the circumferential variation of the measured sectorial fuel amount. After the fuel is measured from the patternator, the minimun, maximum and average values can be determined. In Equation No. 4, the variable X_s is defined as the percentage of fuel in any single sector (all annuli) of an n circumferential sector patternator. SUI is calculated as the ratio of the standard deviation of variable X_s to its mean value.

$$SUI = \frac{\sqrt{\frac{\sum(X_s - \overline{X})^2}{n-1}}}{\overline{X}} \times 100 \qquad \textit{Equation 4}$$

The smaller the value of SUI, the more uniform is the circumferential distribution of fuel spray. In this test, the fuel collector is divided into eight sectors.

Figure 8-17 shows the normalized SUI of two fuels and a calibration fluid (7024). The ATJ-SKA blended fuel has a similar SUI as the Jet A fuel (7024 fluid), but both of these fuels have a larger SUI index than JP-8. The 7024 calibration fluid closely simulates Jet A and JP-8 fuel properties, however, the difference in SUI between Jet A and

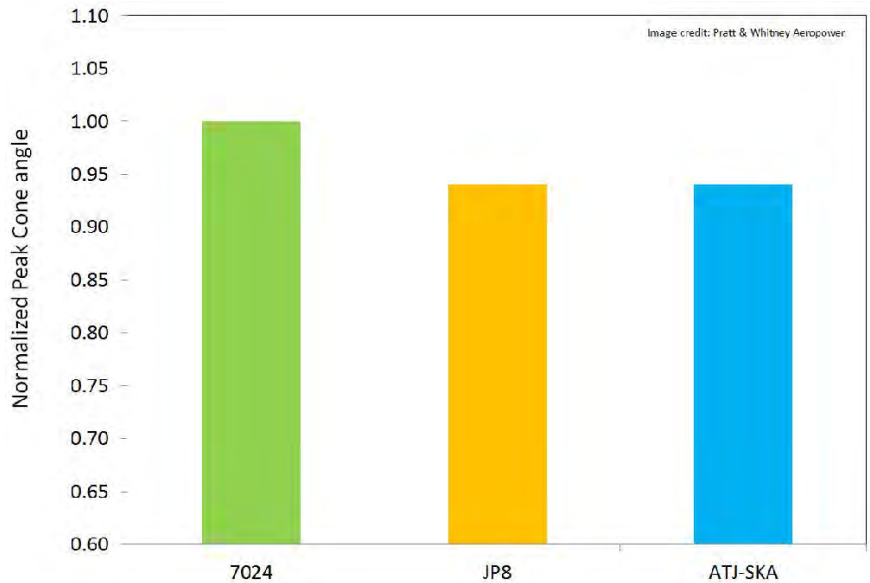

Figure 8-15. *Comparison of Spray Cone Angle* θ_{peak} *(Degrees) With Ambient Fuel Temperature*

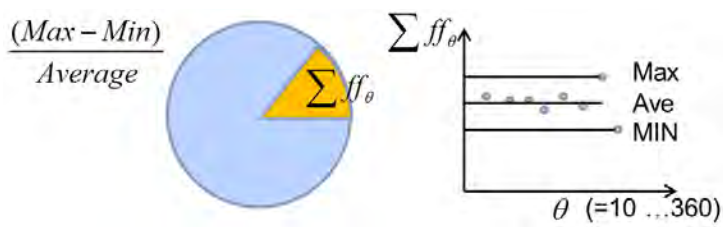

Figure 8-16. *Schematic of a Patternator Sector*

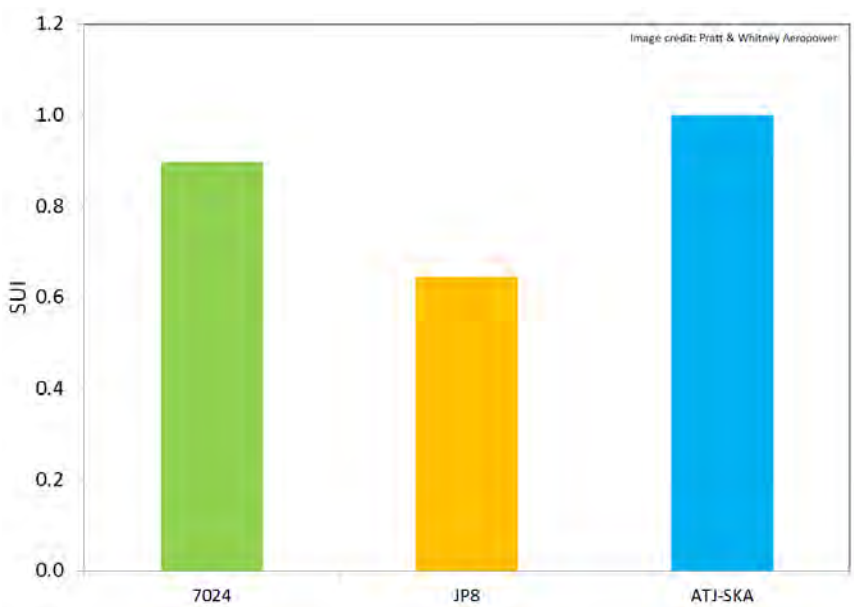

Figure 8-17. *Ambient Temperature SUI*

JP-8 is significant. It is possible that the SUI index is sensitive to this method of measurement. A further investigation would be needed to determine what caused this difference.

8.2.4 Radial Fuel Distribution

Radial fuel flow distribution is obtained by averaging the fuel flow in the circumferential direction at each radial location. The result is a radial distribution of droplet flowrate of the spray. The distribution is usually reported as a function of radius of a normalized quantity, be it a mass or a volume flowrate of fuels. Due to intellectual property (IP) considerations, the plots are not included in this report. However, after comparing the radial distributions of the three fuels, we concluded that the 50/50 ATJ-SKA/JP-8 fuel blend has a similar radial distribution as the Jet A and JP-8 baseline fuels.

8.2.5 PDI Results

PDI measurement is used to characterize liquid spray by focusing a laser beam to a fixed point, and collecting data from a sample of about 10,000 droplets before moving to another point. The results are line distributions of droplet velocity and mean droplet size (D_{32}). Usually, this line distribution is presented as a radial distribution (there is no circumferential averaging). Due to IP concerns, the radial distributions are not included in this report. However, we concluded that at ambient temperatures the 50/50 ATJ-SKA/JP-8 blend has a similar radial droplet velocity and droplet size distributions to those of the baseline fuels.

THIS DOCUMENT HAS BEEN PUBLICLY RELEASED AND IS NOT SUBJECT TO THE EAR OR ITAR