Honeywell CLEEN Program

Eric Blatt

FAA CLEEN Consortium

21-15032-1A

November 2, 2011

Honeywell

Agenda

- Preliminary Design
- CLEEN Technologies
  - Turbine Technologies
  - Compressor Technologies
  - Alternative Fuels
- Schedule
- Summary

Preliminary Design

CLEEN Preliminary Design – Agenda

- Optimization Approach
- Optimization Results
- CLEEN Configuration
- Aircraft Mission Analysis

Honeywell CLEEN Cycle Influences

- System integration study, focused on infusing technologies to reduce mission fuel burn
- Technologies focus on engine core, increasing Compressor and Turbine temperature capability (T3 and T4) to enable reductions in aircraft mission fuel burn
- Core Compressor – T3 Capability
  - Enables higher cycle Overall Pressure Ratio (OPR) leading to improved TSFC
- Core Turbine – T4 Capability
  - Required for HPT to drive increased OPR
  - Offers improved core power density, thereby reducing weight and enabling cycle efficiency

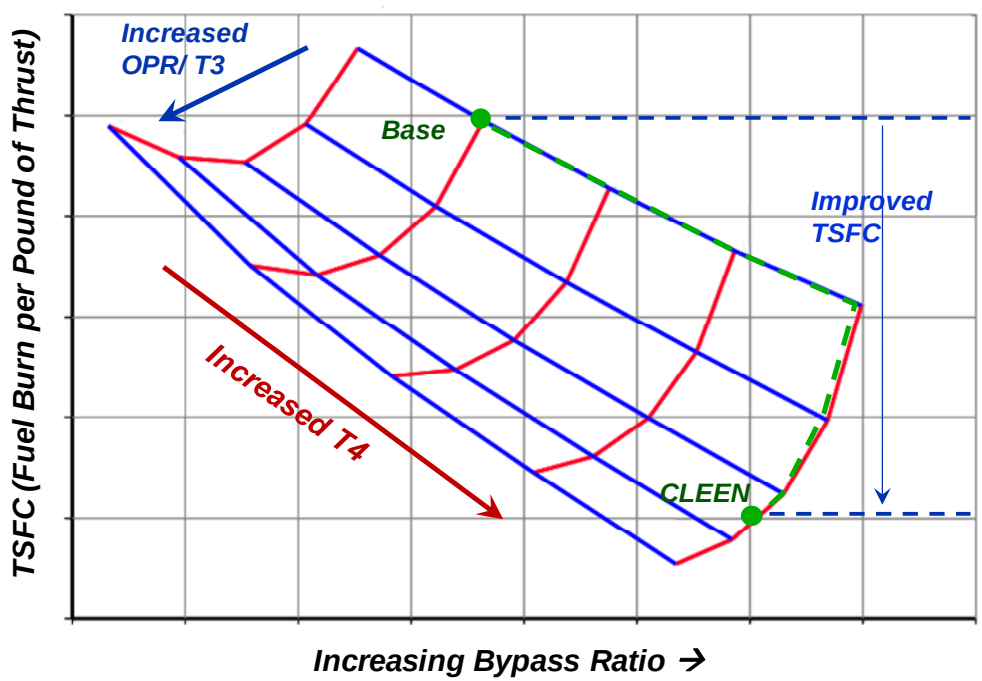

T3 and T4 Increase Enables Reduced Fuel Consumption

CLEEN Cycle Optimization Tool

- **Cycle optimization tool utilized to establish CLEEN cycle**
- **CLEEN engine cycle includes CLEEN and Honeywell technologies**
- **Aircraft Mission Fuel Burn optimization drove the CLEEN cycle relative to the Baseline engine architecture to include:**
  - Increased fan diameter and bypass ratio
  - Increased cycle pressure ratio to utilize T3 technologies
  - Smaller engine core taking power density benefit of T4.1 technologies

CLEEN Cycle

CLEEN Technologies →

Honeywell Technologies →

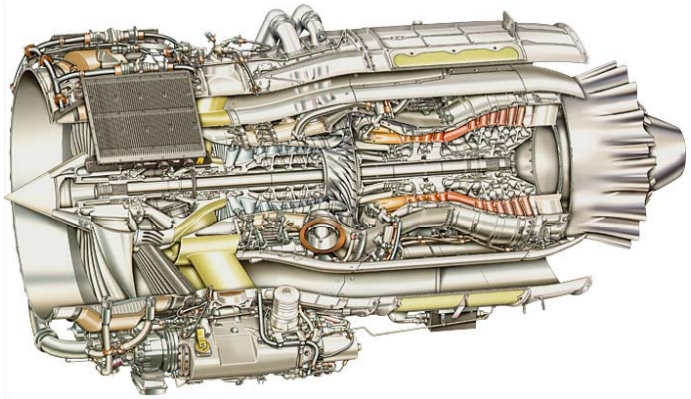

Technologies Enable Optimization to CLEEN Goals

CLEEN: Optimization Results

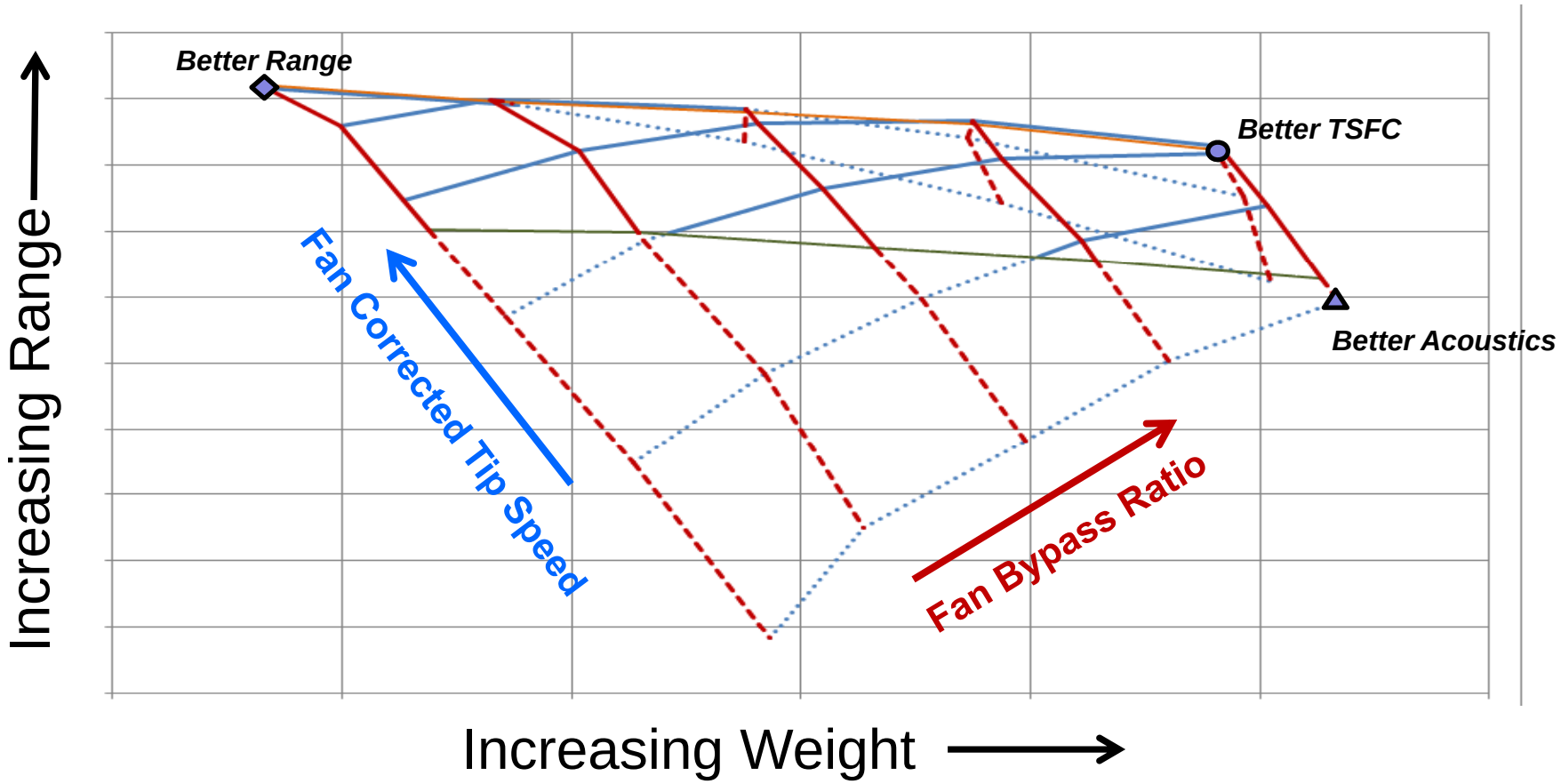

CLEEN Cycle Selection Is a Balance of Range, TSFC and Acoustics

CLEEN Cycle Aircraft Mission Analysis

- Engine Benefits
  - Increased bypass ratio without impacting Thrust/Weight
  - Significant reduction in engine specific fuel consumption
  - Technology infusion reduces engine weight
- Fuel Burn Benefits
  - Large reduction in fuel burn from engine performance
  - Nacelle size increase from larger fan has minimal impact on fuel burn
  - Engine weight benefit more than offsets the nacelle size impact

Engine	Delta
Bypass Ratio	70%
Thrust / Weight	6%
TSFC	-12.9%
Engine Weight Benefit	-5.9%

Fuel Burn Benefit	Delta
Engine Performance	-14.2%
Engine Weight	-0.6%

Total Mission Fuel Burn Benefit	-14.8%

CLEEN Shows 14.8 Percent Fuel Burn Improvement

Honeywell CLEEN Technologies

Honeywell CLEEN Technologies

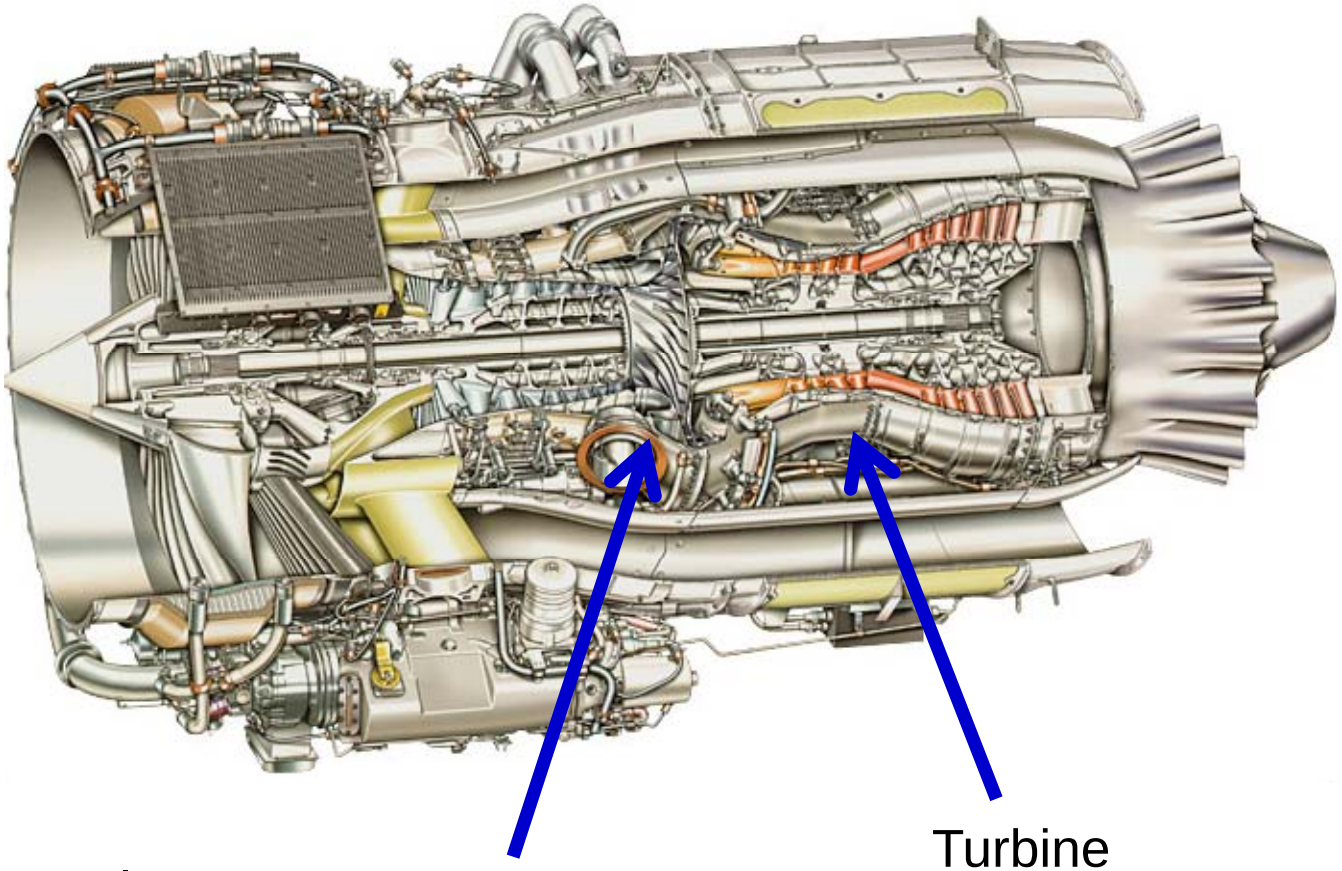

Alternative Fuels
- 100% Bio Based

Compressor
- High T3 impeller

Turbine
- Low Leakage Air-Air Seals
- Advanced Materials

Turbine Advanced Materials

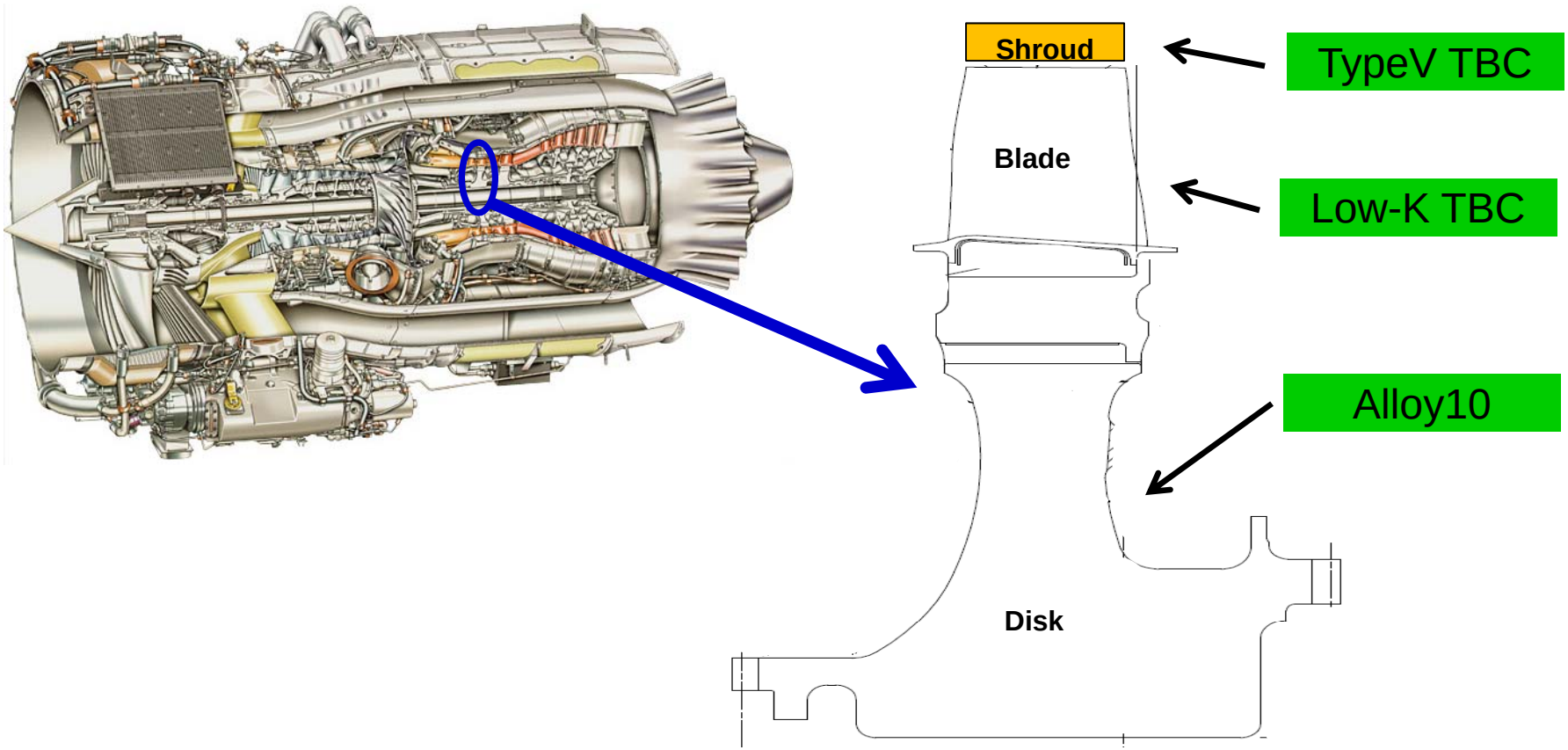

Advanced Materials Enable Higher Turbine Temperature

Advanced Disk Material

Advanced Turbine Disk Material

- CLEEN Program Alloy10 disk material is applied to the HPT disks
- Alloy10 is a Nickel-based superalloy with improved properties enabling higher turbine temperature

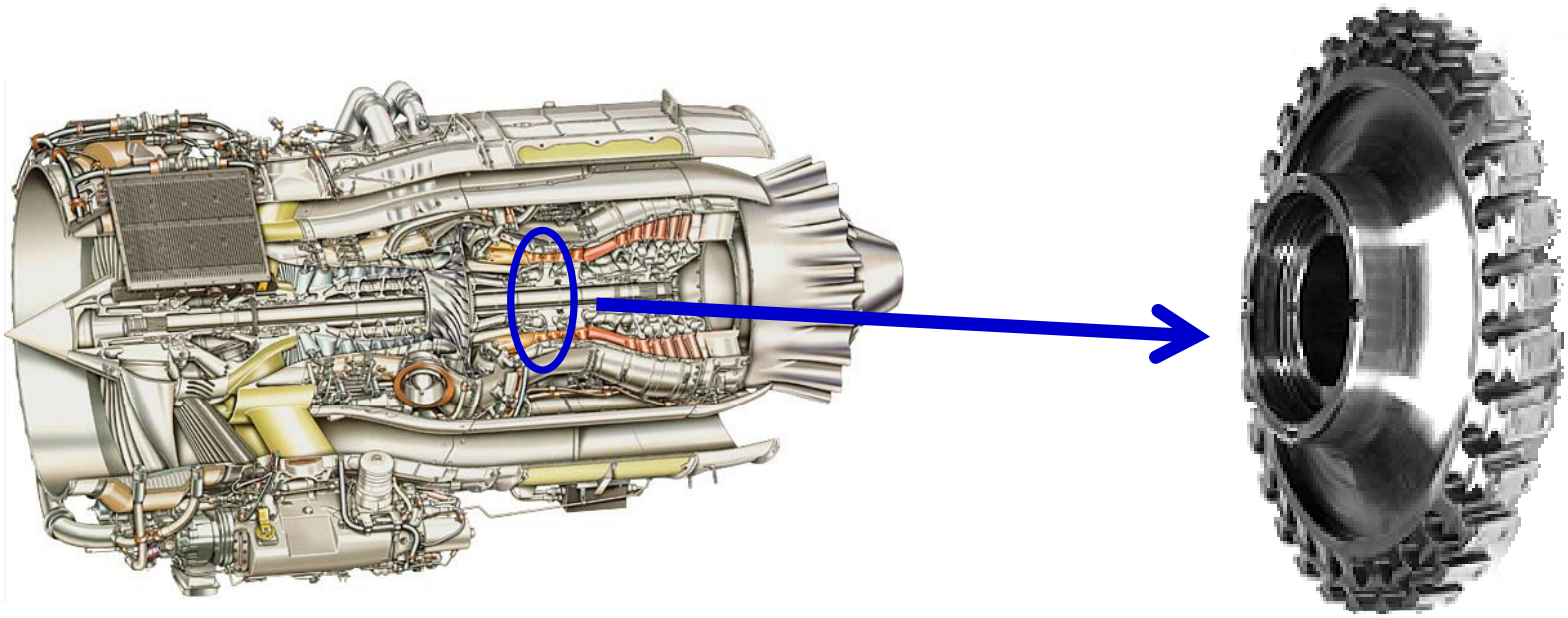

Advanced Turbine Disk Material

- Alloy10 matured to TRL5 in CLEEN Program for propulsion application
- HPT Alloy10 turbine disks have completed engine endurance test
- Alloy10 HPT disks will continue engine endurance testing

Low-K Thermal Barrier Coating

Low-K Thermal Barrier Coating – HPT Turbine Airfoil

- CLEEN Program Low-K TBC is applied to the HPT blade airfoil surface
- Increased temperature capability and low thermal conductivity enabling higher turbine temperatures, less cooling flow, higher power density
- Applied with Electron Beam Physical Vapor Deposition process

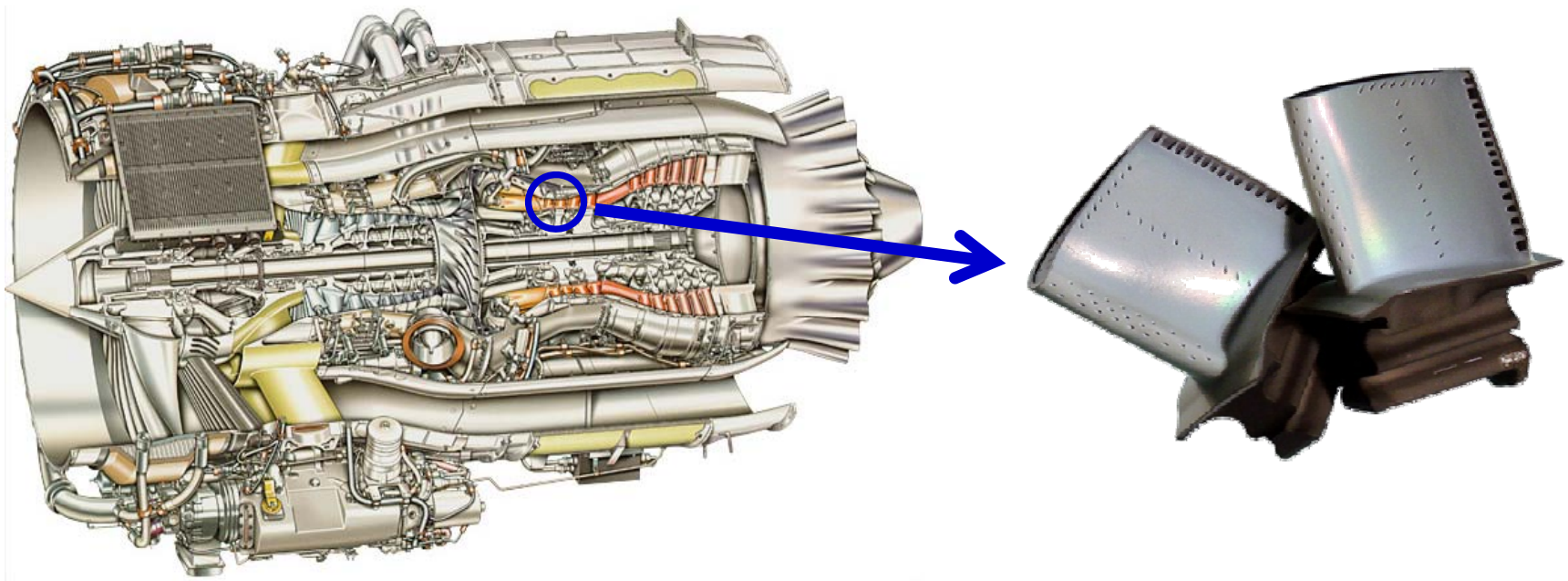

Low-K Thermal Barrier Coating

- Millions of Gas Turbine Engine components operate with Standard TBCs
  - Military, Commercial and Private
  - Air, Ground and Marine
  - Propulsion and Power
  - Rotating and Stationary

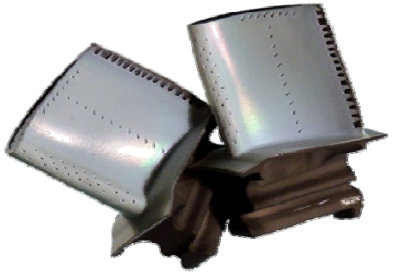

- Low Conductivity (Low-K) Nanolaminate TBCs provides superior heat protection compared to standard TBCs:
  - Lower total cost of ownership
  - Longer component life
  - Higher power density
  - Lower fuel consumption

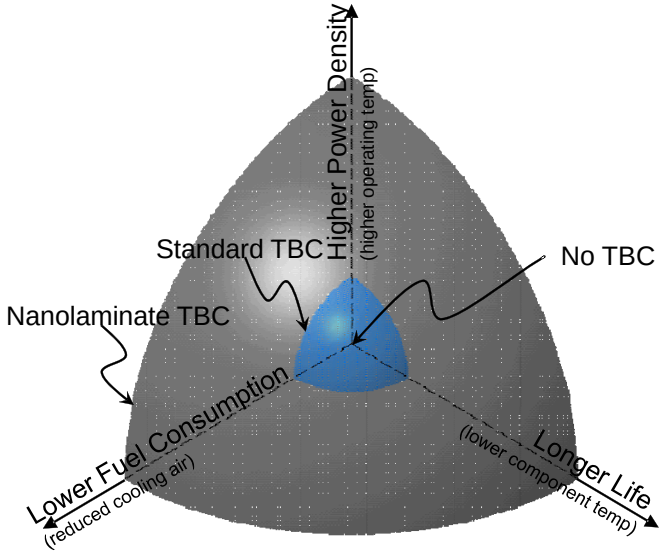

‘Nano’ Phase Boundaries Reduce Conductivity

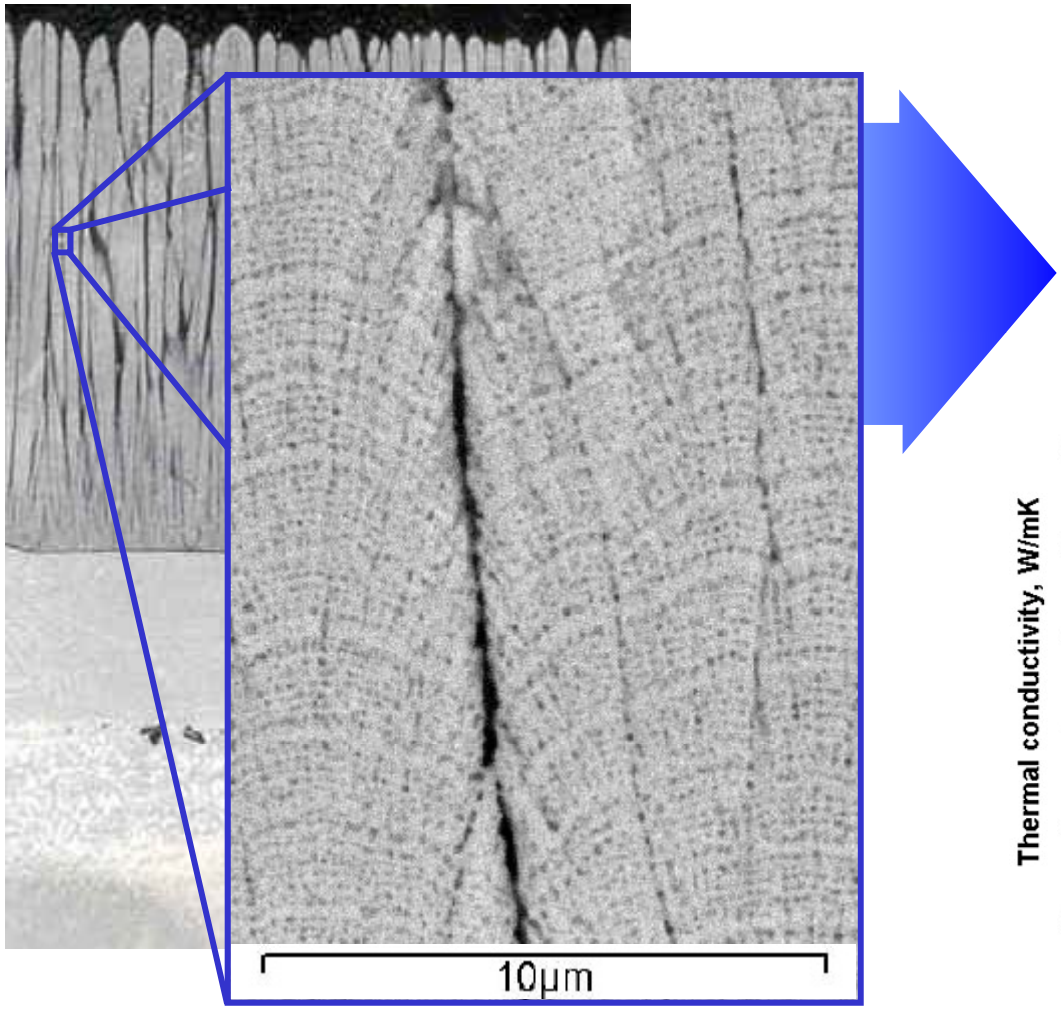

Layered nanoparticle phase boundaries are introduced to provide *Ultra-Low Thermal Conductivity*

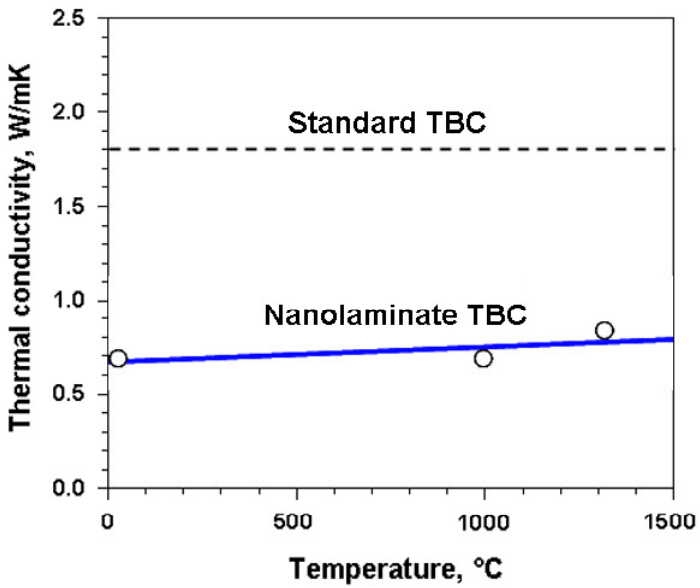

TypeV Thermal Barrier Coating

TypeV Thermal Barrier Coating - HPT1 Tip Shroud

- TypeV TBC has increased temperature capability and low thermal conductivity enabling higher turbine temperatures
- Applied with Plasma Spray Process

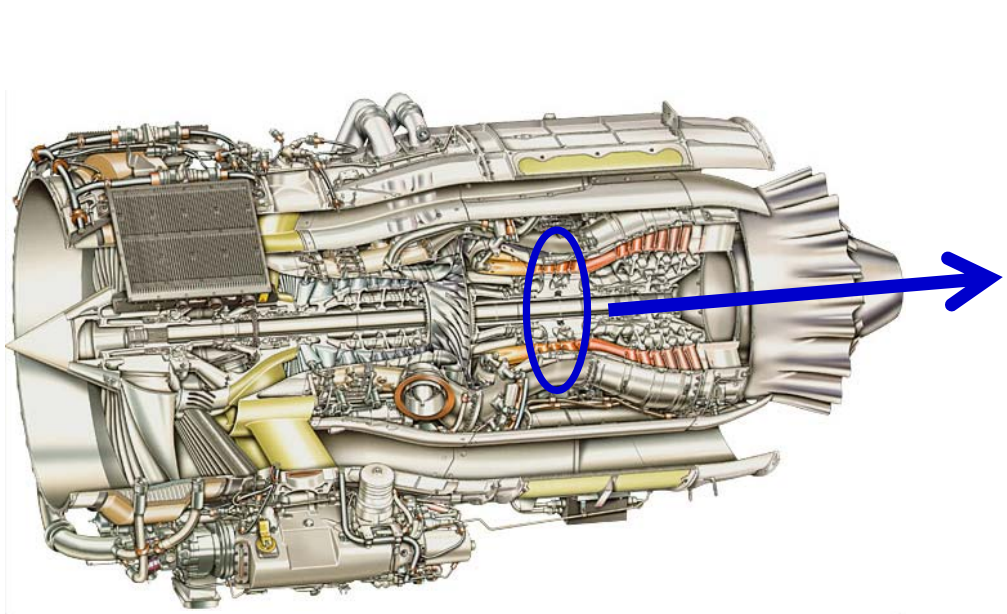

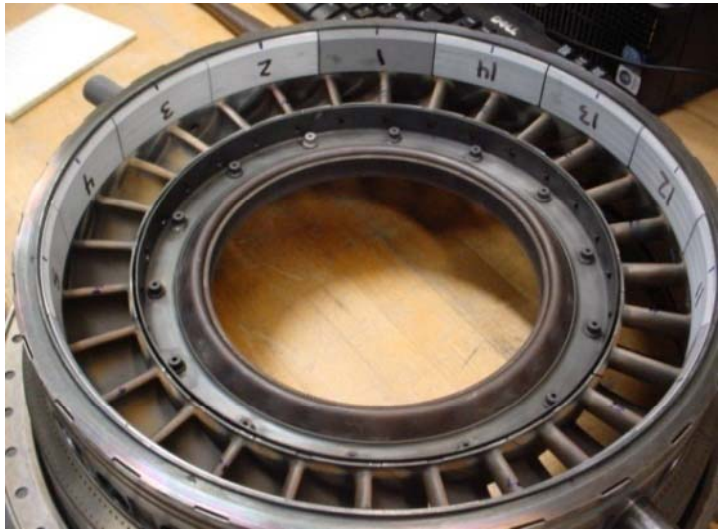

TypeV Thermal Barrier Coating - HPT1 Tip Shroud

- Matured to TRL4
- Measured Thermal Conductivity
- Completed thermal stability tests
- Developed “Configured” specimen test
- Completed multiple engine endurance tests with base substrate. Additional endurance tests planned with alternate substrate

Low Leakage Air-Air Seals

Low Leakage Air-Air Seals

- CLEEN Air-Air seal developed for the HPT cooling circuit. Seals high pressure cavity air on the rotating shaft.
- Enable improved control of engine secondary flows.
- Benefits high delta pressure locations; improves engine cycle efficiency

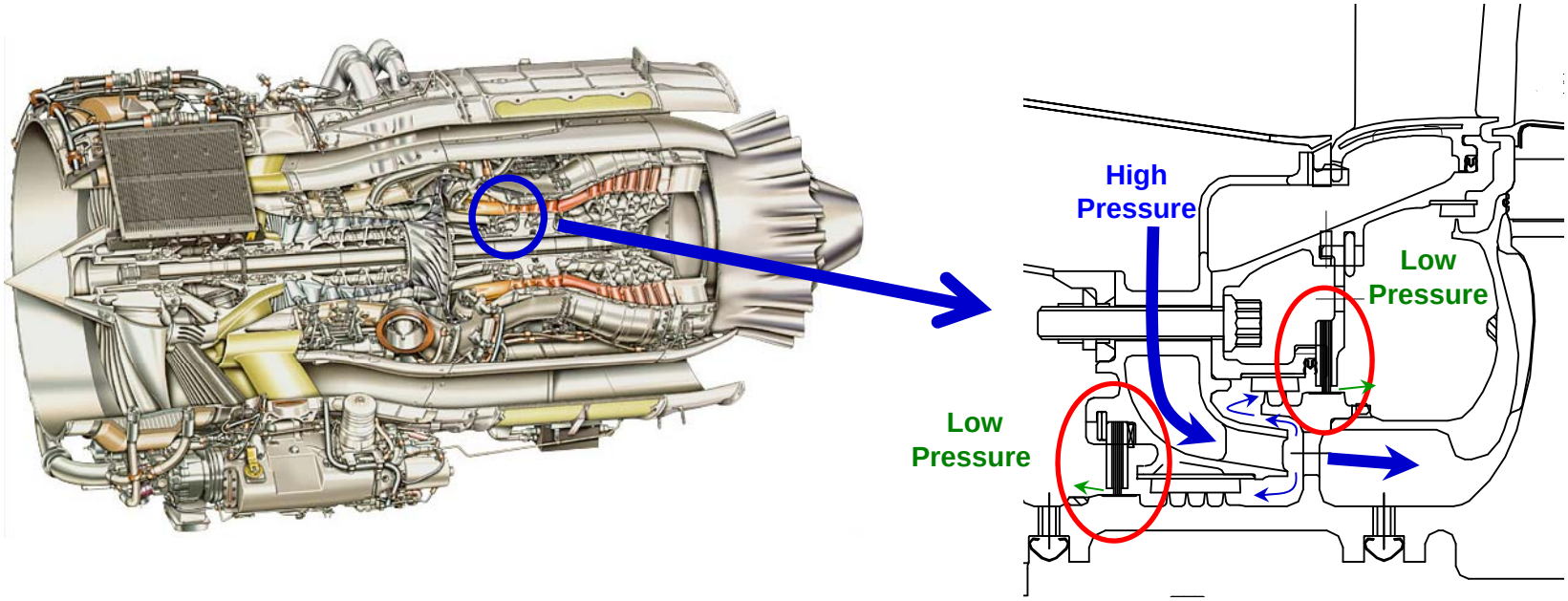

Low Leakage Air-Air Seals

- Rig test completed (TRL5)
- 70% leakage flow reduction
- ΔP capability demonstrated to 20% greater than required
- Leakage flow reduction constant over engine operating range

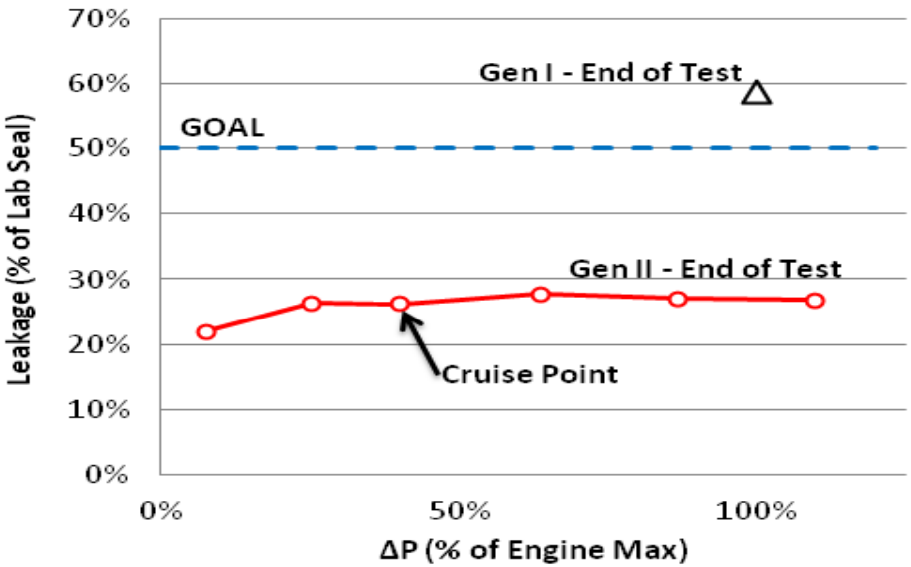

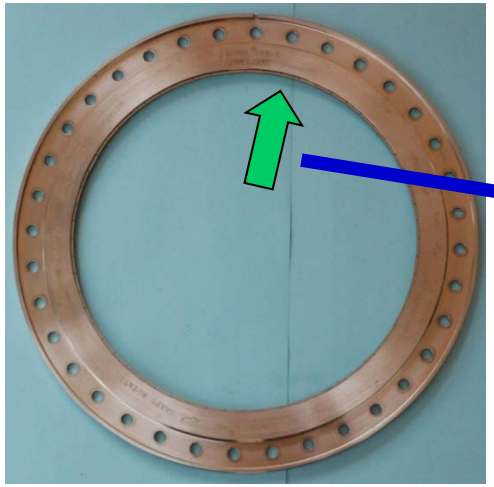

View of seal contact surface “fingers”

High T3 Impeller

High T3 Impeller

- CLEEN High T3 impeller utilize Alloy10 disk material
  - Overall Pressure Ratio (OPR) increase
  - Compressor Temperature increase
  - Specific Fuel Consumption decrease (from OPR)

Impeller – Alloy10

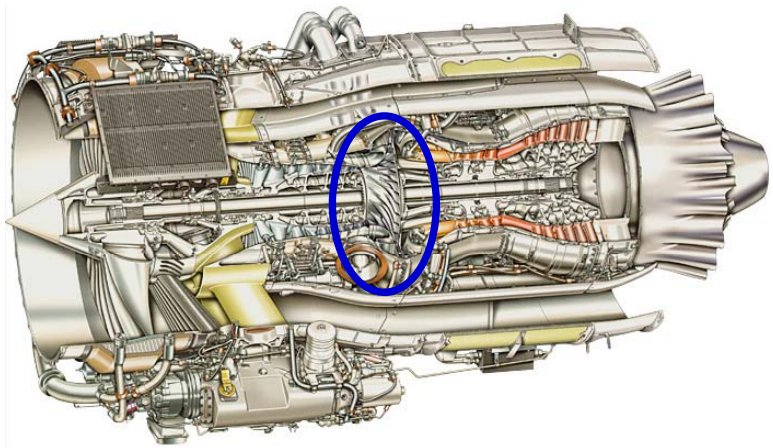

- Increasing engine performance requirements are driving the need for higher temperature material

  Desired material properties:
  - Burst margin (high tensile strength)
  - Fatigue resistant
  - Good creep resistance: Material must be able to withstand high stresses and high temperatures

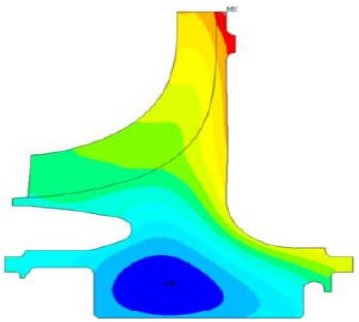

Temperature

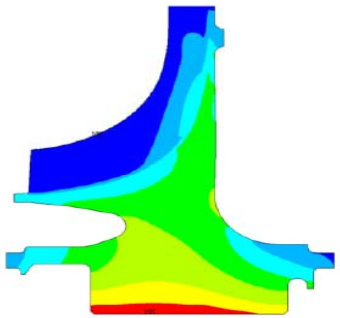

Stress

High T3 Impeller (Cont)

- Preliminary Aero and mechanical design complete
- Detailed design in-process
- Plan for core engine and full engine tests

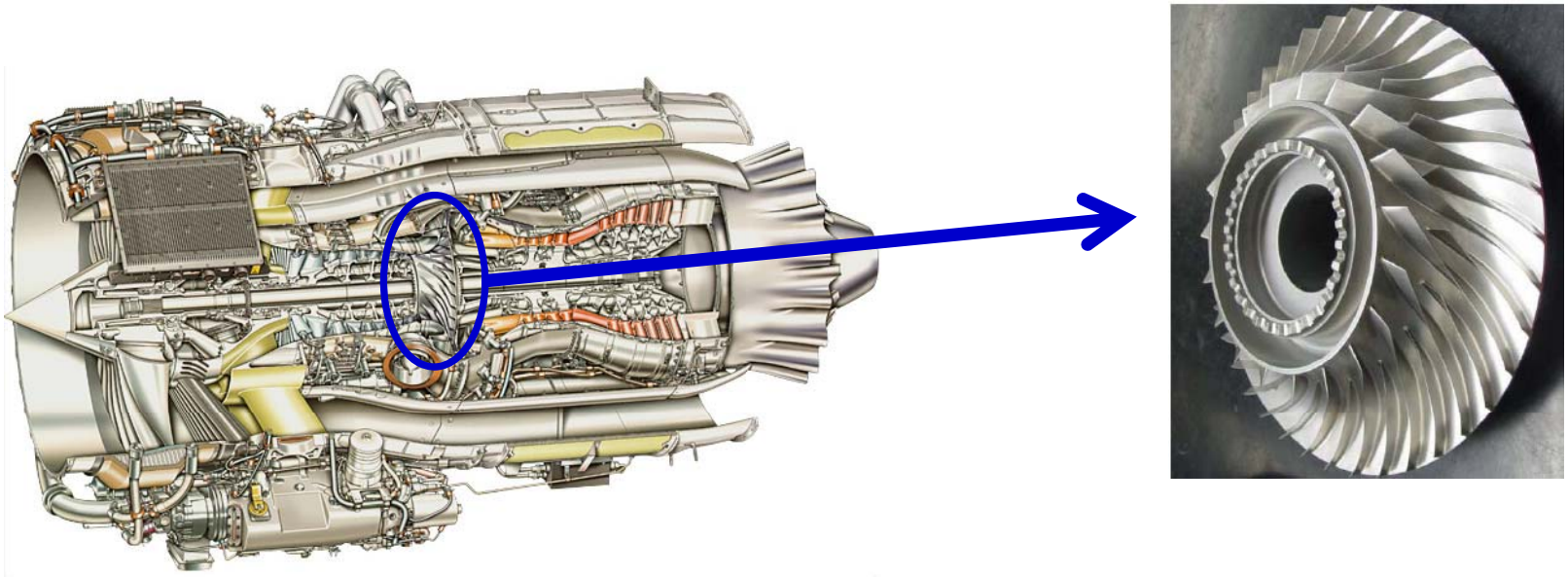

Alternative Fuels

Synthetic Renewable Fuels

- Evaluate a synthetic fuel produced from renewable feedstock
  - ‘Drop-in’ solution
  - Minimum aromatic content for seal swell and lubricity
  - Component, engine, and flight test evaluations
- Assess the environmental impact, cost/benefit, and sustainability
- Develop a production transition strategy, including input to ASTM and OEMs

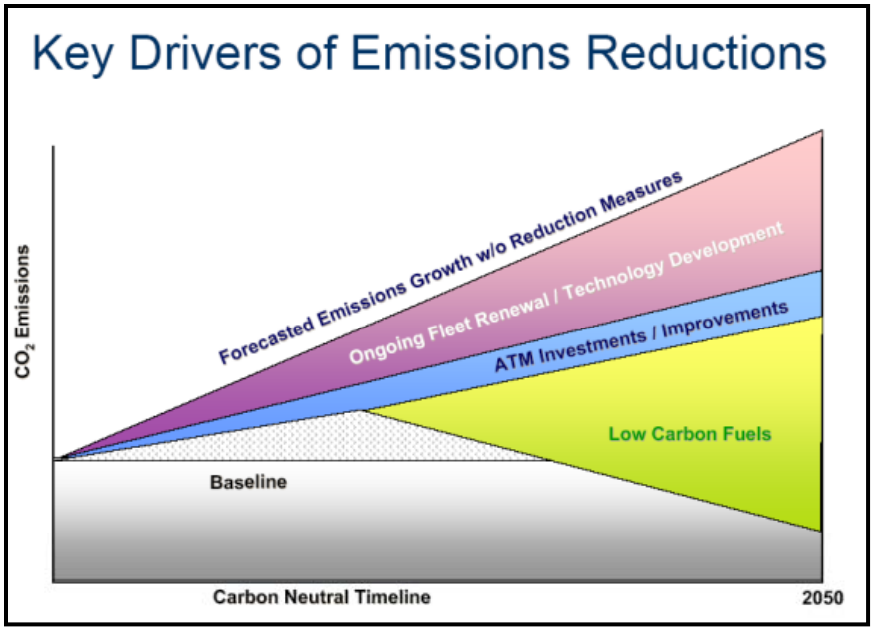

Accomplishments to Date

- Commercially available aromatic blend identified for early program evaluations
- Enabled ASTM approval of 50/50 biofuel through testing and committee participation
  - Honeywell atomizer plugging re-test showed no low-temperature issues with reprocessed fuel
- MIT LCA and Cost/Benefit modeling initiated
- HRJ-SPK fuel procured to support similarity testing

CLEEN Schedule and Summary

Honeywell CLEEN Schedule

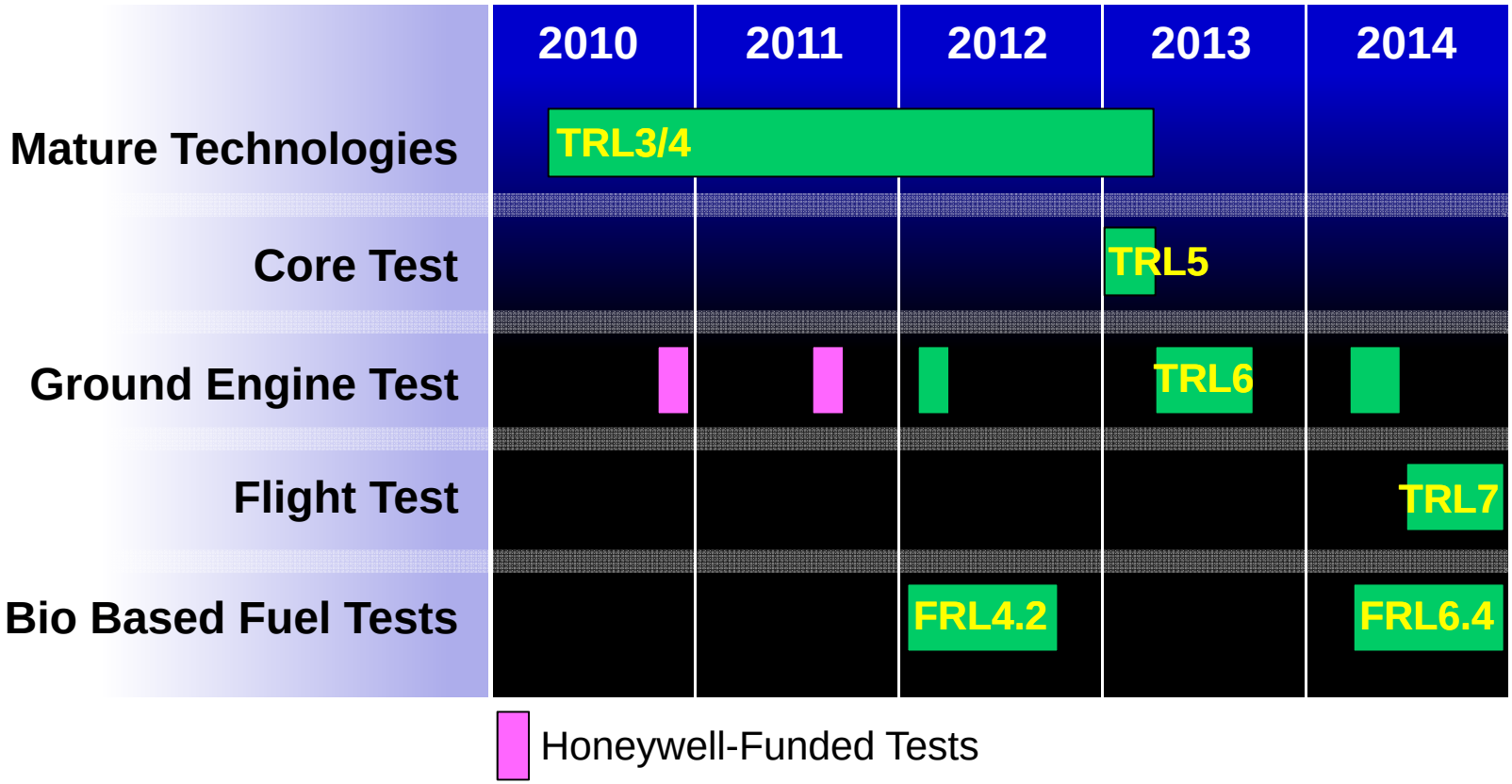

Summary

- Honeywell CLEEN Program
  - Aligned with FAA Goals
  - Program includes Turbine, Compressor and Alternative Fuel Technologies
  - Significant progress achieved in maturing CLEEN technologies

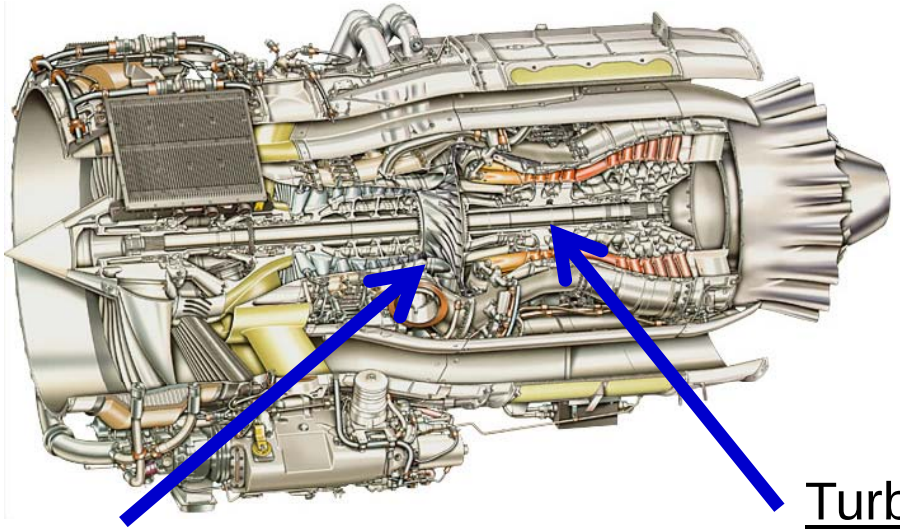

Alternative Fuels
- 100% Bio Based

Turbine
- Low Leakage Air-Air Seals
- Advanced Materials

Compressor
- High T3 impeller