November 20, 2013

Honeywell CLEEN Program
FAA CLEEN Consortium

Honeywell

Agenda

- Honeywell CLEEN Technologies
- Alternative Fuels MIT Phase 1& 2 LCA

Honeywell CLEEN Technologies

Honeywell

Honeywell CLEEN Technologies

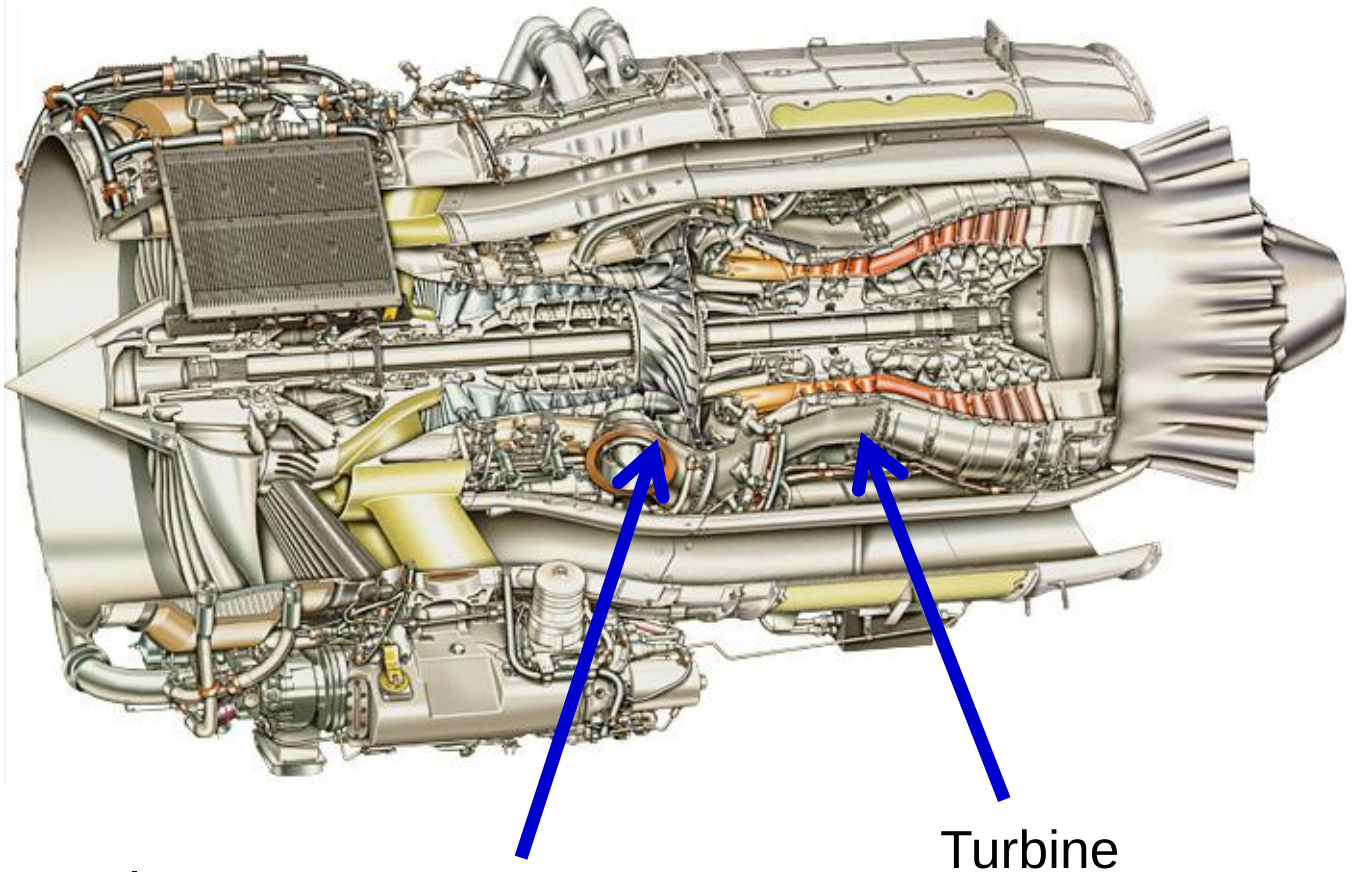

<u>Alternative Fuels</u>
o 100% Bio Based

<u>Compressor</u>
o High T3 impeller

<u>Turbine</u>
o Low Leakage Air-Air Seals
o Advanced Materials

Alloy10 Turbine Disk Material

- Alloy10 HPT disc material matured to TRL6

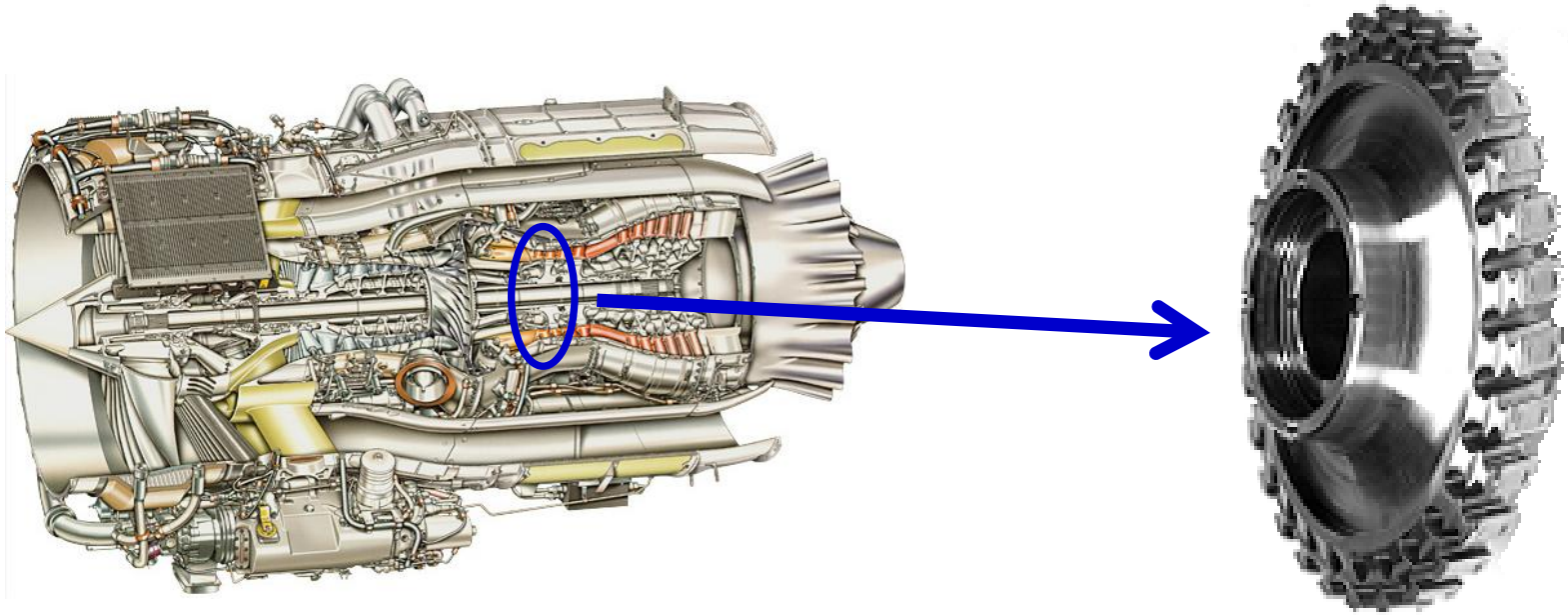

High T3 Impeller

- Aero, mechanical & detailed design complete
- Hardware procured for rig tests (waiting for one piece)
- Core Engine Test planned for 2014

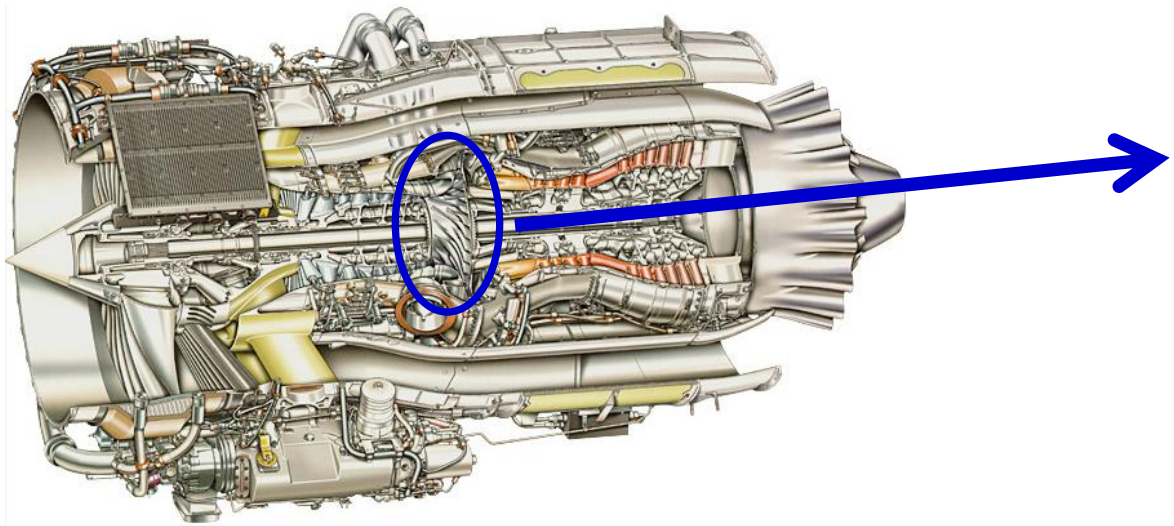

Low Leakage Air-Air Seals

- Completed Rig & Engine performance tests – Seals met CLEEN performance goals
- TRL6 Engine Test planned for early 2014

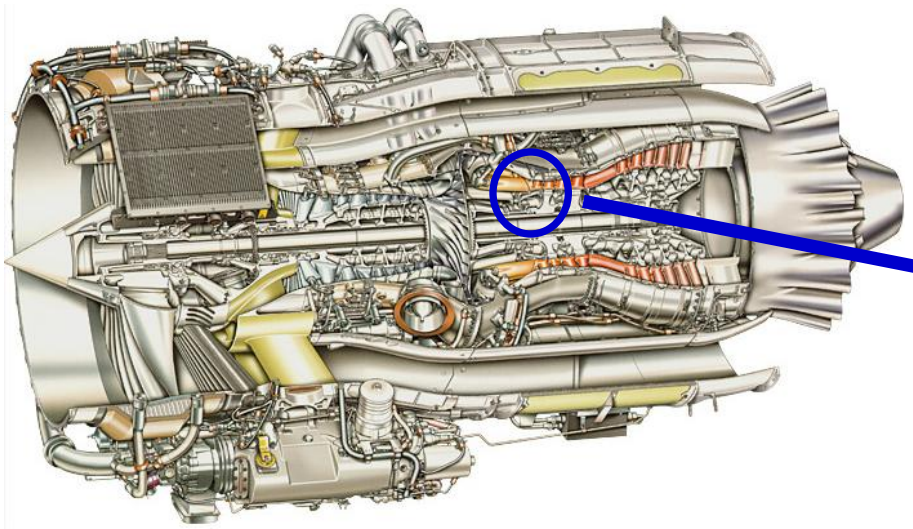

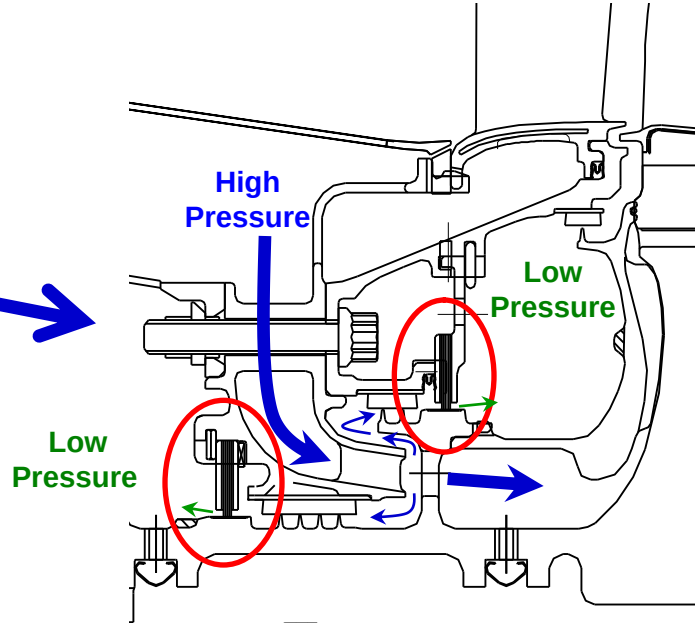

TypeV Thermal Barrier Coating - HPT1 Tip Shroud

- One of the compositions being developed matured to TRL6 (with baseline substrate)
- TRL6 Engine Test planned early 2014 (with alternative substrate material)

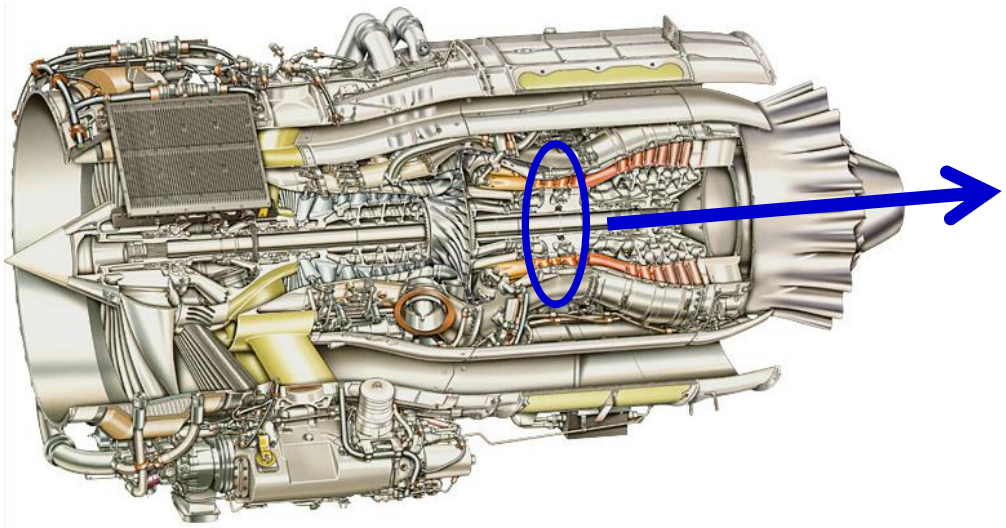

Low-K Thermal Barrier Coating - HPT Turbine Airfoil

- Thermal conductivity meets programs goals
- Rig tests have demonstrated life that exceeds CLEEN program goals
- TRL6 Engine Test planned 2014

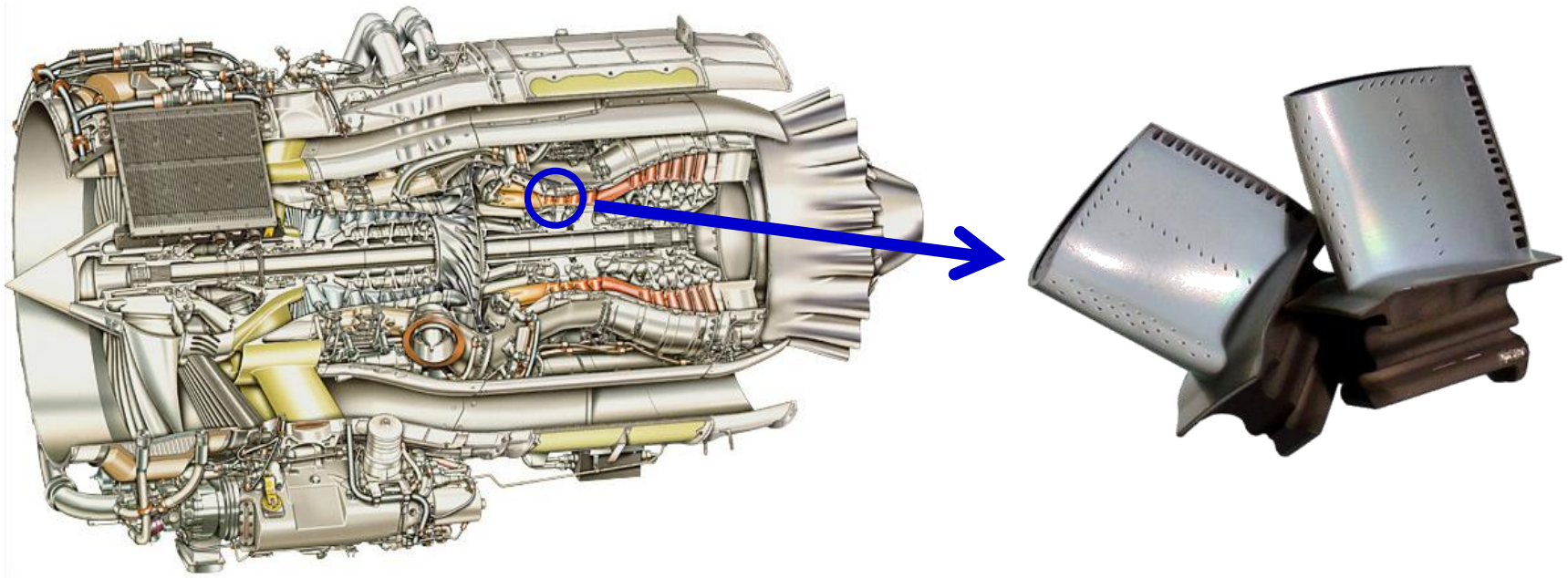

Alternative Fuels

- Completed baseline seal swell & wear test
- Completed MIT Phase 1 & Phase 2 LCA
  - To be discussed in subsequent presentation

Honeywell CLEEN Schedule

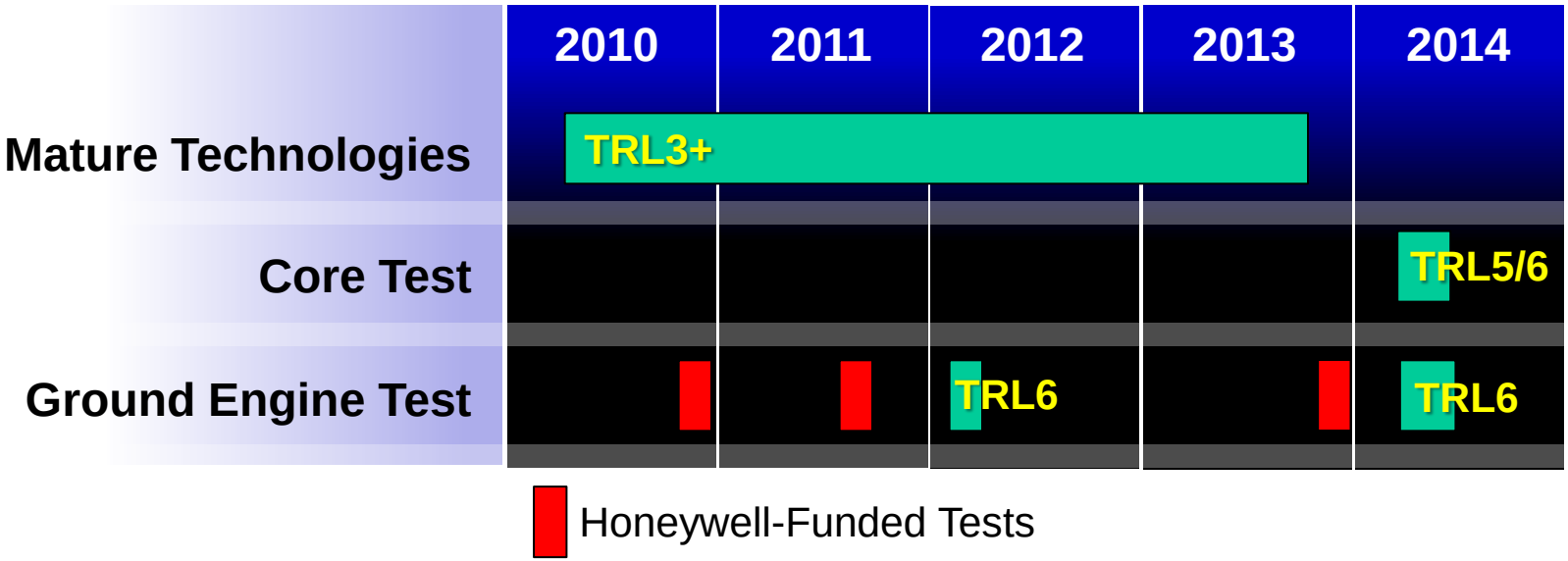

Alternative Fuels

MIT Phase 1 & Phase 2 LCA

Dr. Robert Malina

Honeywell

Laboratory for Aviation and the Environment
Massachusetts Institute of Technology

Environmental Sustainability of Fully Synthetic Jet Fuel Production

Robert Malina – presenting joint work with:
Hakan Olcay, Gonca Seber & Steven Barrett (all MIT)
Tom Kalnes (UOP LLC, A Honeywell Company)
Paul Yankowich & Tony Keeton (Honeywell Aerospace Division)

Background and Objectives

- *Synthetic paraffinic kerosene* (SPK) has been approved by ASTM to be blended up to 50% with conventional jet fuel. Higher blends not approved due to lack of aromatics in SPK

- Blending an SPK fuel with *hydrotreated depolymerized cellulosic jet fuel* (HDCJ), which contains aromatics, offer the potential to obtain a *fully synthetic jet fuel* (FSJF) purely from renewable feedstocks

- In the study we quantify **lifecycle greenhouse gas emissions** (GHG) of different FSJF obtained by blending *hydroprocessed esters and fatty acids* (HEFA) jet fuel from camelina and tallow, with HDCJ from forest/sawmill residues and sugarcane bagasse

Focus of phase I and phase II

- **Phase I**
  - Investigation of different feedstocks in terms of sustainability and downselection of feedstocks to be used for GHG lifecycle analysis (LCA)
  - First-order LCA for blend of HEFA jet from **camelina**, and of HDCJ from **forest/sawmill residues**

- **Phase II**
  - **Refinement** of LCA results by analyzing impacts of different co-product allocation rules and different technology options
  - Addition of **two feedstocks** to the GHG analysis:
    - **Tallow** (for HEFA jet)
    - **Sugarcane bagasse** (for HDCJ)

Feedstock-to-jet fuel pathways considered

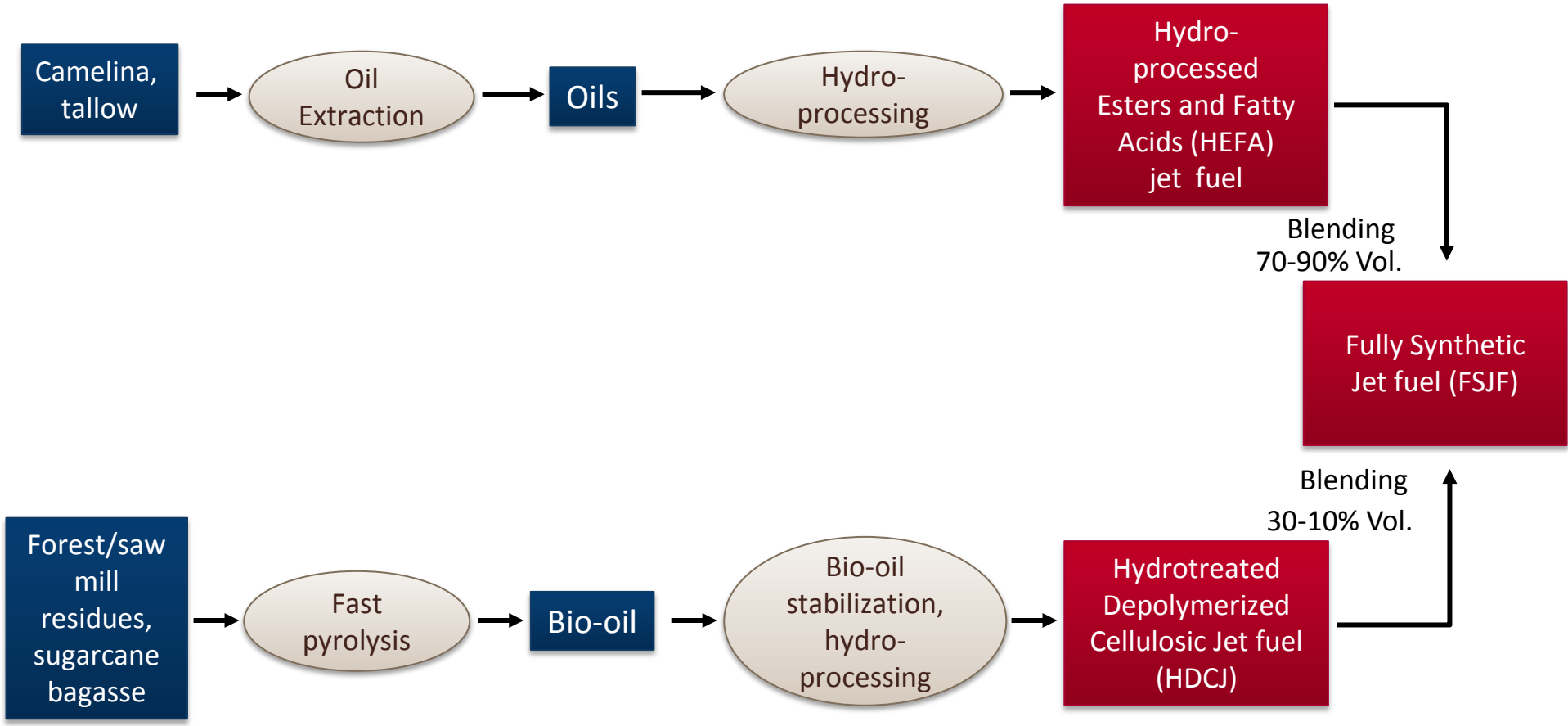

Approach of phase I

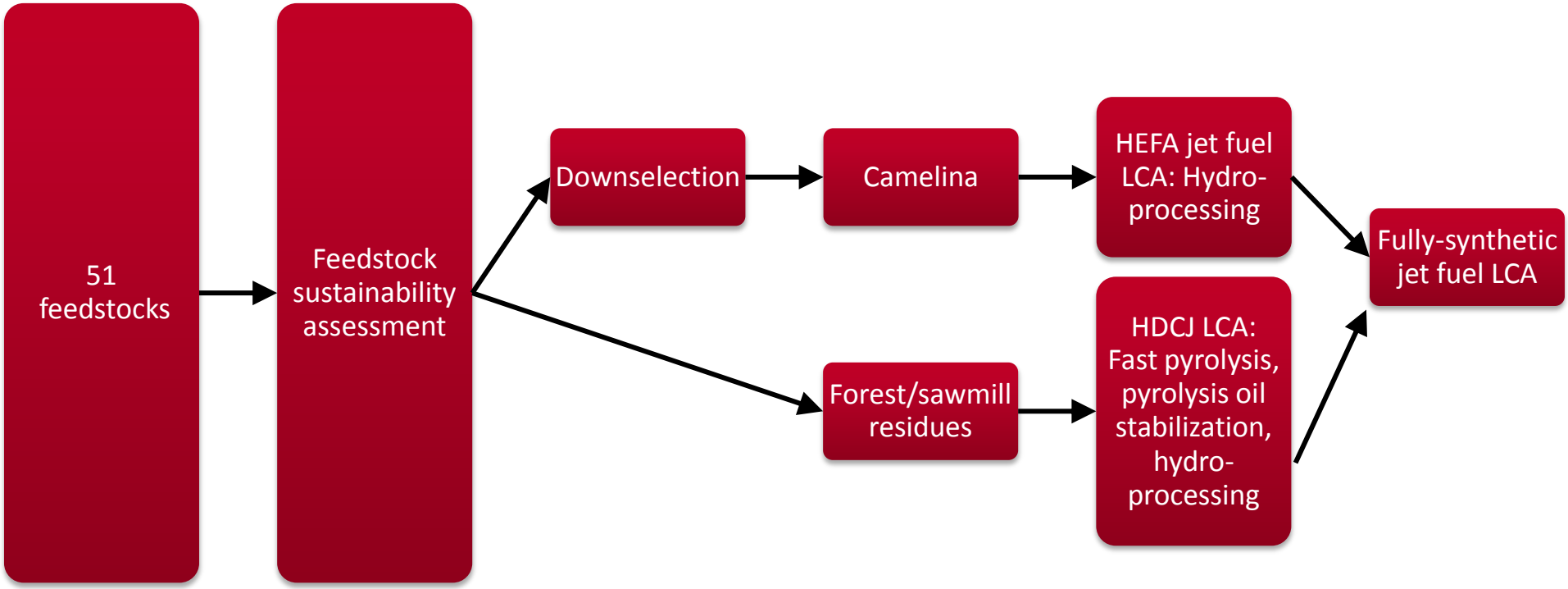

Additional Scope of phase II

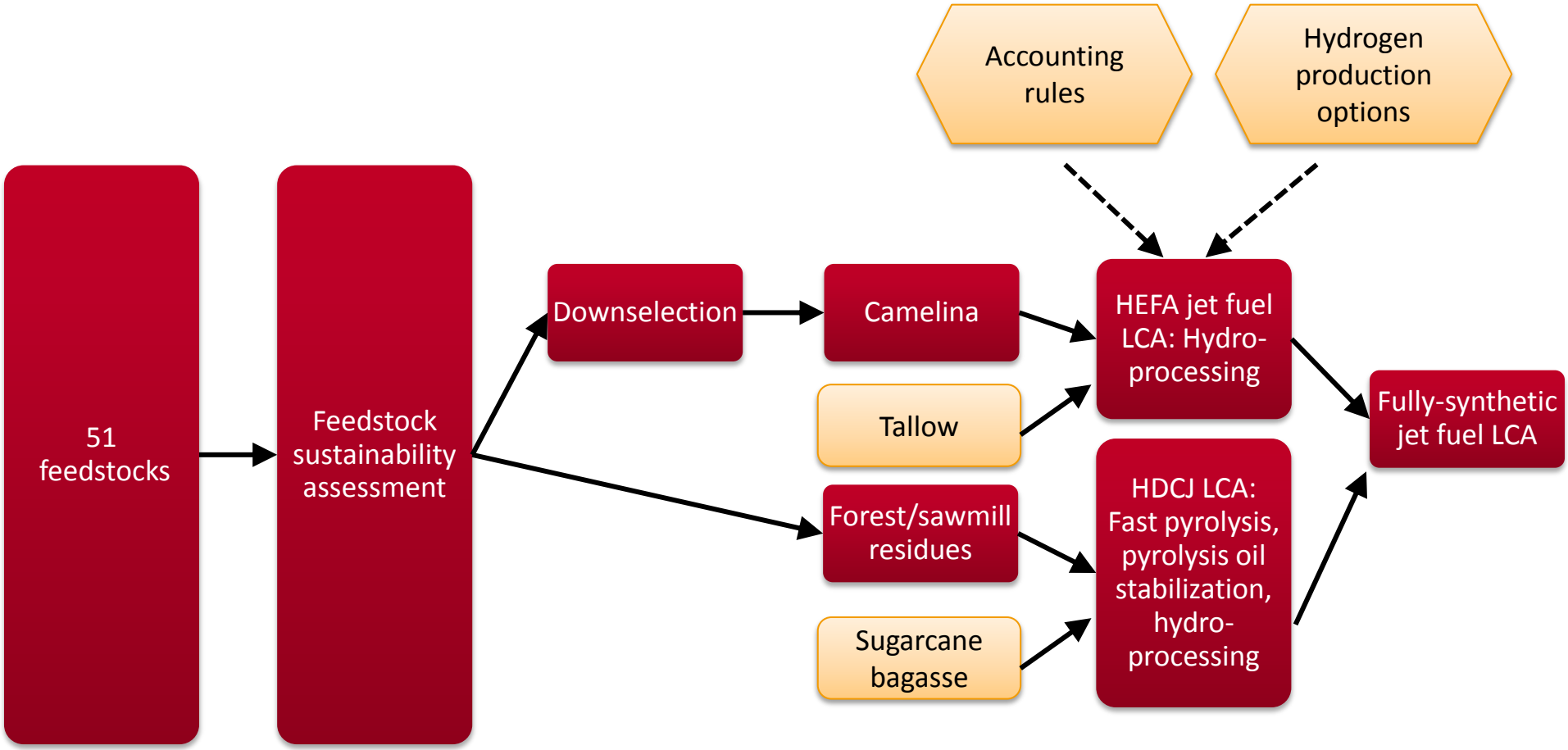

Sustainability assessment & downselection of feedstocks

- **51 HEFA- and HDCJ-eligible feedstocks considered overall**
- **Sustainability assessment carried out for all feedstocks based on a broad set of metrics developed**
  - To capture sustainability from environmental, economic and societal perspectives, including 'readiness' of feedstock in terms of deployment
- **Downselection for HEFA feedstock based on metrics**
  - Aim: To select <u>one</u> feasible choice as a HEFA feedstock for Phase I
- **Camelina chosen as HEFA feedstock after mutual agreement between MIT and UOP:** Relatively well-researched feedstock, rotation crop which can grow on fallow land, no direct competition with food etc.
- **Forest/sawmill residues taken as HDCJ feedstock, as already agreed in Statement of Work for Phase I**

Lifecycle GHG emissions from renewable fuels

For all feedstocks-to-fuel pathways under consideration we carried out a 'well-to-wake' analysis of greenhouse gas emissions involving the following steps

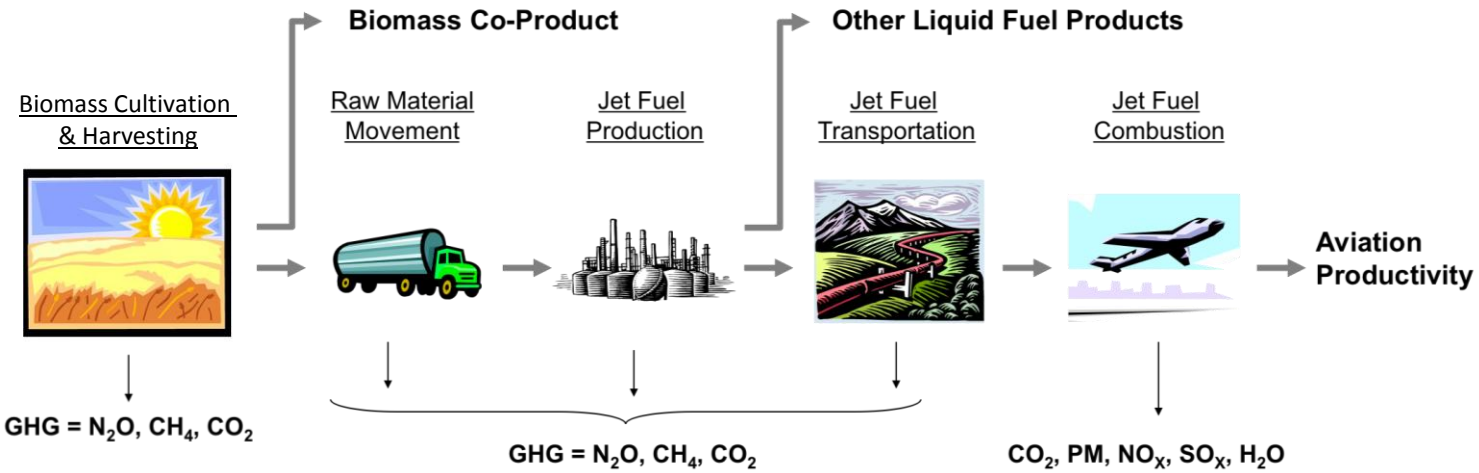

(Schematic adapted from PARTNER Project 28 report, Summer 2010)

LCA challenges

- **Co-product allocation**
  - For fuel co-products: Energy-content based approach
  - For upstream co-products, market-based allocation except for sawmill residues where mass allocation is used, and for sugarcane bagasse vs. sugar where system expansion is used
  - Sensitivity of results to co-product allocation rules is explored for HEFA cases

- **Data quality**
  - Use of UOP proprietary data for fuel production step in case of HDCJ
  - HEFA production step data taken from process simulation documented in Pearlson (2011) and Pearlson, Hileman, Wollersheim (2013)
  - Other lifecycle steps modeled in GREET1.2011, GREET1.2012rev2, and SimaPro 7.3.3 – model result comparisons have been performed where applicable

LCA challenges

- **Data variability and uncertainty**
  - Introduction of different emission cases that capture a range of potential outcomes, driven by, for example, different farming practices, rendering practices and hydrogen sources

- **Emissions from land-use change**
  - Camelina can grow on fallow land: No negative change in land use induced if grown on this type of land
  - Tallow is a by-product of the meat production industry: No effect of tallow HEFA product on amount of cattle raised
  - Residues (sawmill residues & sugarcane bagasse) are treated as not inducing land-use change

- **Conventional jet fuel reference emissions**
  - Taken from Stratton, Wong, Hileman (2010): 87.5gCO_2e/MJ of jet fuel (Range: 80.7-109.3 gCO_2e/MJ)

Main modeling inputs (1/5)

- Material inputs and outputs for camelina HEFA jet were taken from the open literature . They were used to augment the GREET framework.

Farming and HEFA: Material and energy inputs that differ in the three emission cases studied (per kg seed).

	Units	Low	Base	High
Potassium chloride, as K_2O	kg	0.0033	0.0169	0.01
Thomas meal, as P_2O_5	kg	0.005	0.0253	0.015
Urea, as N	kg	0.0249	0.0169	0.037
Diesel, low-sulfur	Btu	320.4	1630.5	965.3
Hydrogen source		Catalytic reforming of petroleum-derived naphtha	Steam reforming of HEFA-derived naphtha and light ends	Natural gas steam reforming

Farming and extraction: Material and energy inputs that are common for the three emission cases studied.

Processes	Inputs	Values	Units
Camelina Farming	Herbicide	0.0017	kg/kg seed
Camelina Oil Extraction	Natural gas	675	Btu/lb oil
	Electricity	46	
	Hexane	45	
Fuel Production[1]	Natural gas	4.9	lb/100 lb oil
	Electricity	9400	Btu/100 lb oil
	Hydrogen	4.0	lb/100 lb oil

[1] Max. fuel

Main modeling inputs (2/5)

- Material inputs and outputs for tallow HEFA jet were taken from the open literature . They were used to augment the GREET framework.

Rendering: Material and energy inputs that differ in the three emission cases studied (per lb oil).

	Units	Low	Base	High
Natural gas	Btu	2360	3606	4956
Electricity	Btu	245	271	671

HEFA: Material and energy inputs that are common for the three emission cases studied.

Processes	Inputs	Values	Units
Max jet	Natural gas[1]	3215	Btu/lb tallow
	Electricity	94	
Max distillate	Natural gas[1]	2100	
	Electricity	94	

[1]Hydrogen source: Natural gas steam reforming. Value includes natural gas required for hydrogen production.

Main modeling inputs (3/5)

- Material Inputs and outputs for HDCJ production were provided by UOP. This information was used to augment GREET.

Material and Energy Inputs	Values	Units
Feedstock	confidential	kg
Ethanol		
Sulfuric acid		
Sodium hydroxide		
Sodium chloride		
Natural gas		Btu
Electricity		

Outputs	Amount (kg)
HDCJ	confidential
Renewable LPG	
Renewable gasoline	
Renewable diesel	
Renewable solid fuel	
Steam	

Main modeling inputs (4/5)

Transportation assumptions HEFA jet[1]

	Mode	Share[1]	Fuel Type	Mileage
Seed Transportation	Truck	100%	Diesel	100
Oil Transportation	Rail	100%	Diesel	1243
	Truck	100%	Diesel	75
Jet Fuel Transportation	Truck	63%	Diesel	50
	Barge	8%	Residual oil	520
	Rail	29%	Diesel	800
Jet Fuel Distribution	Truck	100%	Diesel	30

[1]Weight-based share of a feedstock that relies on a certain transportation mode. The total can, therefore, exceed 100% as a certain amount of feedstock can be moved from location to location by different transportation modes until its final destination.

Main modeling inputs (5/5)

Transportation assumptions HDCJ

	Mode	Share[1]	Fuel Type	Mileage
Sawmill residues				
To pyrolysis plant	Truck	100%	Diesel	31.1
Ethanol				
To bulk center	Barge	40%	Residual oil	520
	Rail	40%	Diesel	800
	Truck	20%	Diesel	80
To plant	Truck	100%	Diesel	30
Sulfuric acid				
To bulk center	Ocean tanker	60%	Residual oil	1500
	Barge	50%	Residual oil	400
	Rail	50%	Diesel	750
Sodium chloride				
To bulk center	Ocean tanker	60%	Residual oil	5200
	Barge	50%	Residual oil	400
	Rail	50%	Diesel	750
Stabilized pyrolysis oil				
To conversion plant	Truck	100%	Diesel	62.1
HDCJ				
To jet fuel terminal	Truck	100%	Diesel	62.1

[1] Weight-based share of a feedstock that relies on a certain transportation mode. The total can, therefore, exceed 100% as a certain amount of feedstock can be moved from location to location by different transportation modes until its final destination.

Camelina: Results and sensitivity to emission accounting methods

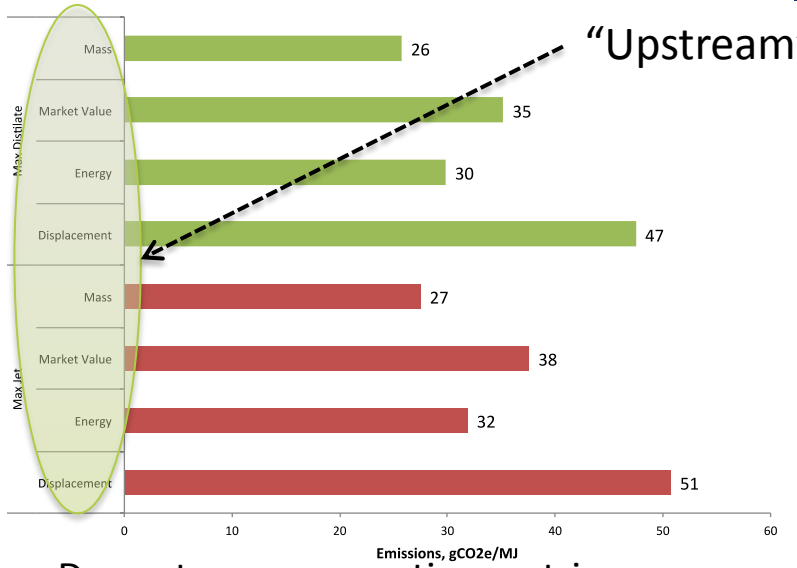

Downstream accounting metric: energy

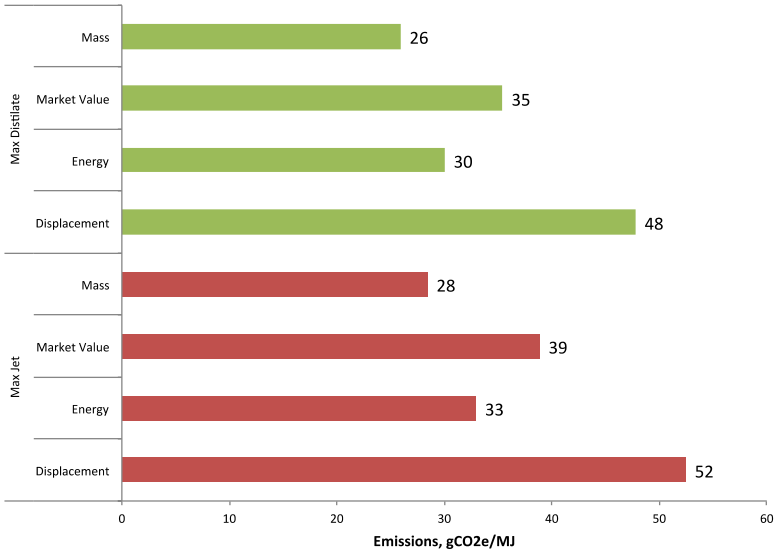

Downstream accounting metric: mass

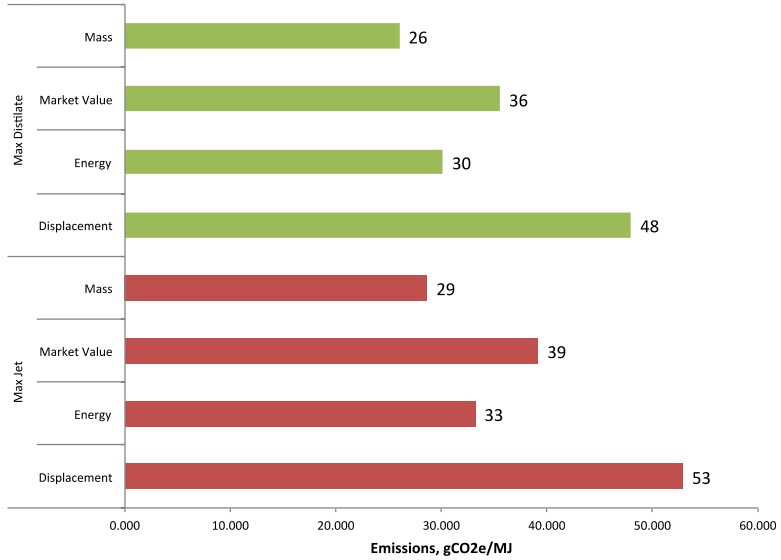

Downstream accounting metric: market

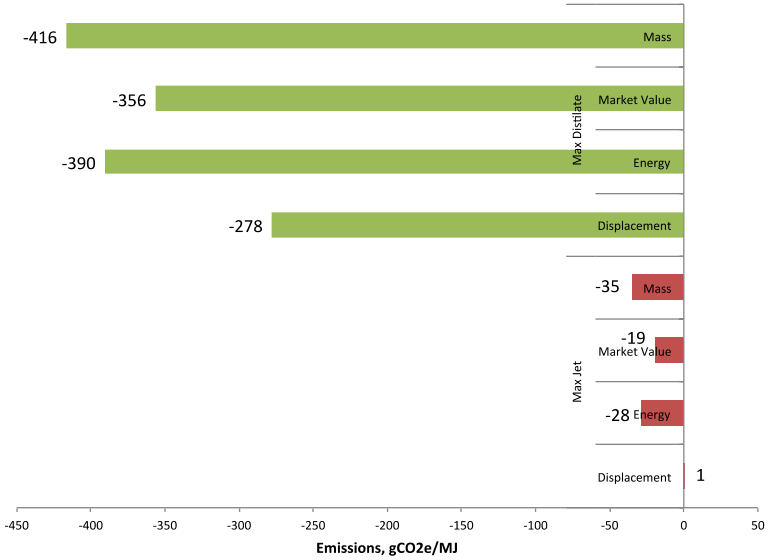

Downstream accounting metric: displacement

Tallow: Results and sensitivity to allocation rule and accounting tool

Tallow HEFA example

"Upstream" accounting rule

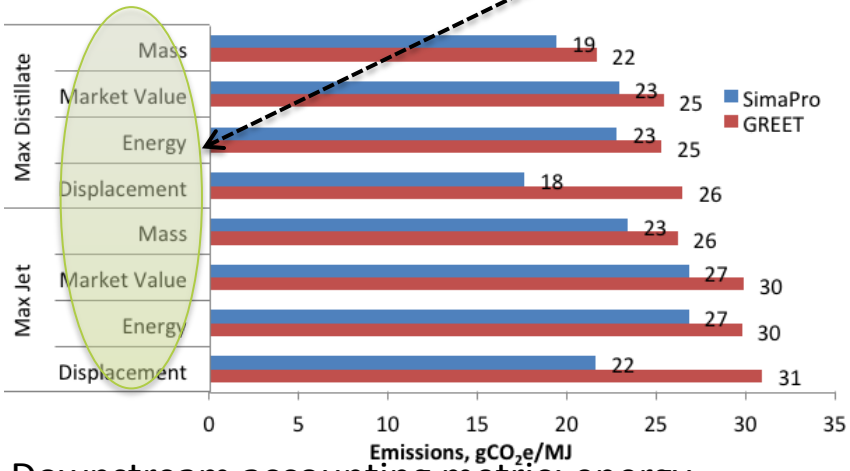

Downstream accounting metric: energy

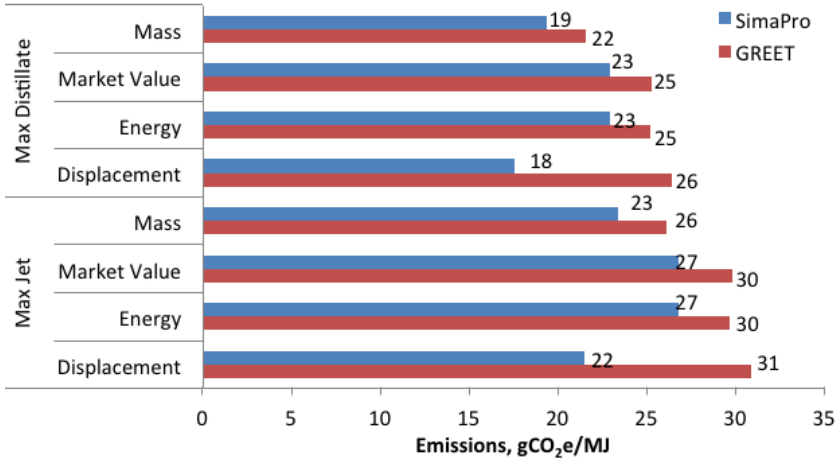

Downstream accounting metric: mass

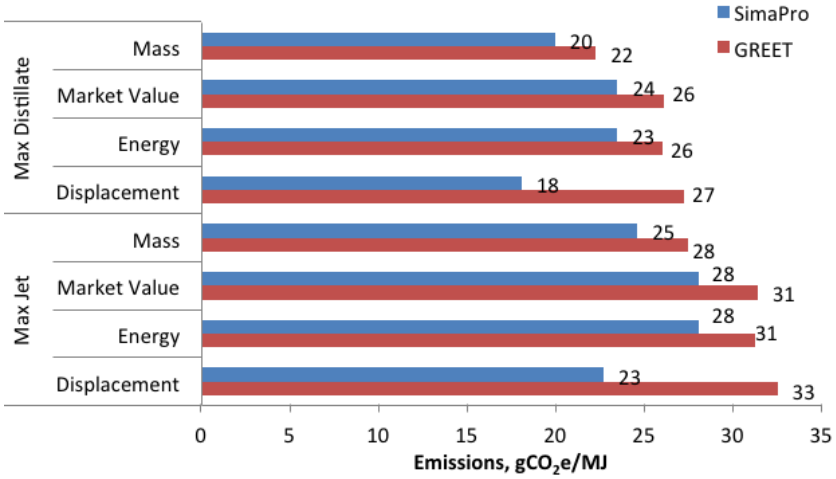

Downstream accounting metric: market

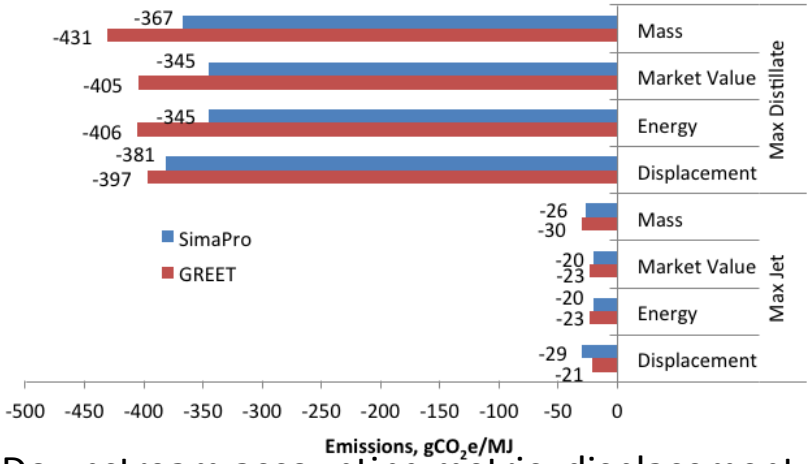

Downstream accounting metric: displacement

Sensitivity to changes in relative market prices

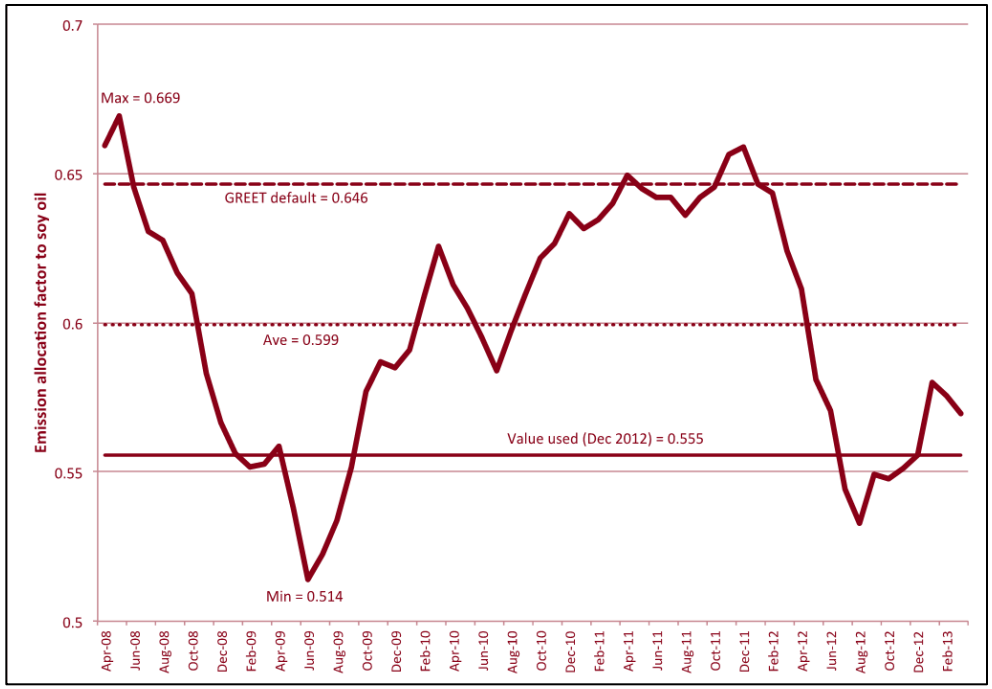

Change in market-based allocation factor for soy oil with fluctuation in the 5-year market prices of soy oil and soybean meal.
Lines – full line: factor used as default in analyses (Dec. 2012), dotted line: 5-year averaged allocation factor, dashed line: default GREET factor.

Factor	GHG emissions (gCO2e/MJ)
Max	43.4
GREET	42.2
Ave	39.8
Used	37.5
Min	35.4

Change in HEFA jet fuel GHG emissions based on market-based allocation factors outlined on the left

Impact of different hydrogen sources

- Scenario I: Natural gas steam reforming (accounted for in LCA)
  -> Use of GREET1_2011 default assumptions
- Scenario II: Catalytic reforming of petroleum-derived naphtha into gasoline
  -> Data provided by UOP
- Scenario III: Steam reforming of HEFA-derived naphtha and light ends
  -> Modeled in project

Lifecycle GHG emissions of camelina HEFA with different hydrogen scenarios[1]

Emissions (g/MJ_{jet})	Scenario I	Scenario II	Scenario III
GHGs (gCO_2e/MJ)	**39.5**	**28.8**	**31.9**

[1]Upstream and downstream accounting metric: Energy

HDCJ: GHG emissions results and breakdown

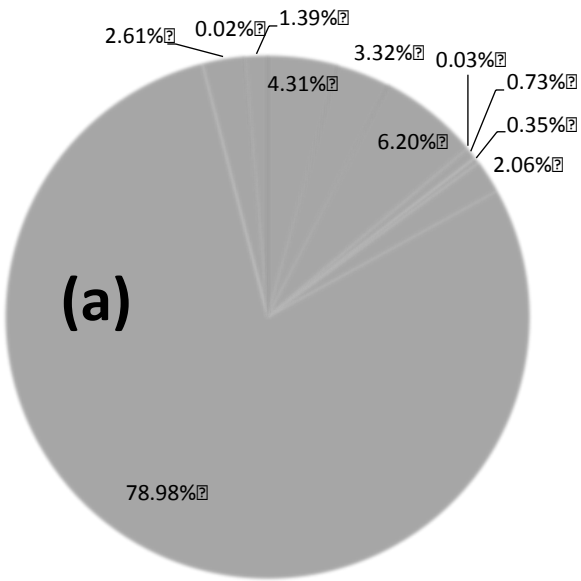

Residue collection
Residue transportation
Corn ethanol
Sulfuric acid
Sodium hydroxide
Sodium chloride
Stabilized pyrolysis oil transportation
Fuel production
Landfill
Wastewater treatment
Kerosene transportation

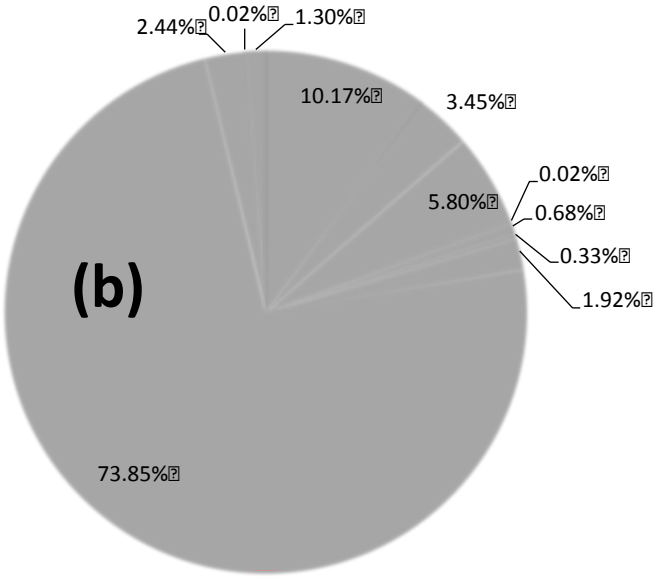

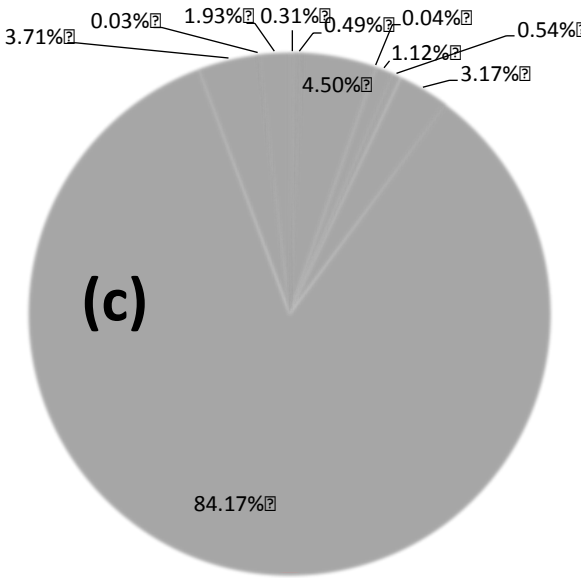

Displacement discredit
Bagasse transportation
Sugarcane ethanol
Sulfuric acid
Sodium hydroxide
Sodium chloride
Stabilized pyrolysis oil transportation
Fuel production
Landfill
Wastewater treatment
Kerosene transportation

(a) Forest residues, 37.7 gCO2e/MJ
(b) Sawmill residues, 40.3 gCO2e/MJ
(c) Sugarcane bagasse, 27.1 gCO2e/MJ

HDCJ: System expansion

Case I: Independent systems

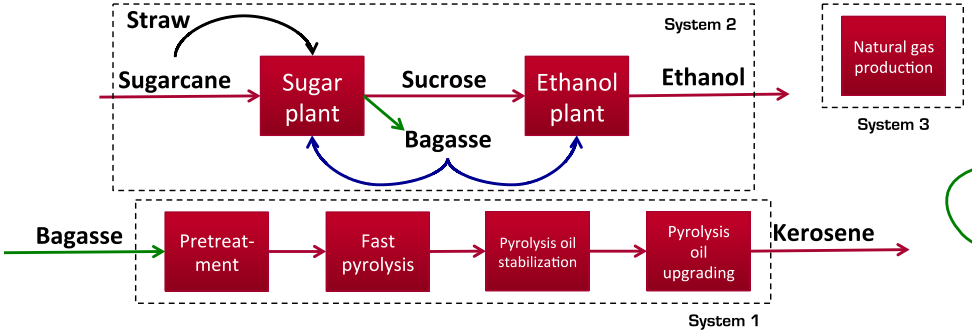

Case II: Combined systems

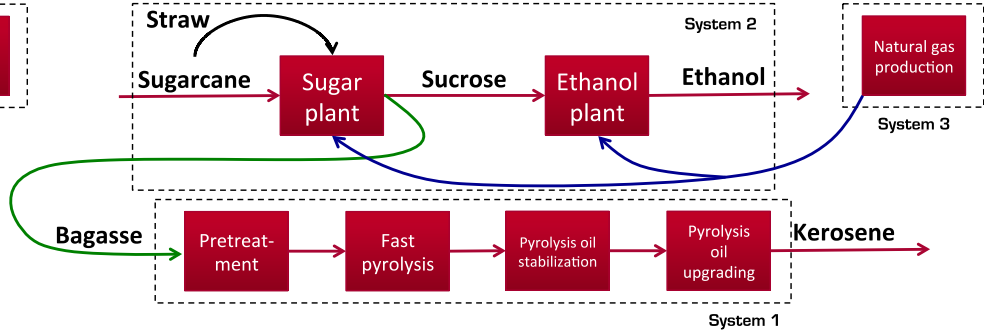

- Combined system: When bagasse is used as a feedstock for kerosene production, it is assumed to no longer be available for steam and electricity generation in sugar and ethanol plants
- Natural gas assumed to satisfy the energy needs of sugar and ethanol plants instead
- That is, natural gas displaces bagasse, which results in higher carbon footprints
- Increase in overall carbon footprint due to this displacement is reflected to kerosene as a “discredit”

Summary

- The total GHG emissions from producing an FSJF based on the HEFA base emission scenarios and optimal HEFA production scheme have been found to vary between **25.6 and 36.8 gCO_2e/MJ.** This "base range" corresponds to **57.9-70.7% GHG reductions** compared to conventional jet fuel.

- When all the emission scenarios are considered along with different HEFA production schemes, the range is **21.8-47.8 gCO2e/MJ** (i.e. 45.4-75.1% GHG reduction).

- Overall, we **expect** all the FSJFs considered in this study **to qualify** under the **Renewable Fuels Standard** (RFS2) since the base range satisfies the 50% GHG reduction criterion compared to a conventional jet fuel baseline.

Laboratory for Aviation and the Environment

Massachusetts Institute of Technology

Dr. Robert Malina

rmalina@mit.edu

Website: LAE.MIT.EDU

Twitter: @MIT_LAE