COTS/CRS Program Update
FAA Commercial Space Transportation Conference
February 6, 2013

Frank L. Culbertson, Jr.
Executive Vice President
General Manager
Advanced Programs Group

Cygnus Overview

- **The Cygnus vehicle is comprised of two major modules -**

  - **<u>Service Module (SM)</u>**
    - Heritage: Orbital GEO and LEO missions
    - Power Generation: 2 Fixed Wing Solar Arrays,
    - Power Output: 3.5 kW (sun-pointed)
    - Propellant: Dual-mode
    - Compatible with Antares

  - **<u>Pressurized Cargo Module (PCM)</u>**
    - Heritage: Multi-Purpose Logistics Module (ISS); ATV
    - Total Payload Mass: 2,000 kg, 2700 kg
    - Pressurized Volume: 18.7 m3, 27 m3
    - Berthing at ISS: Node 2 Common Berthing Mechanism

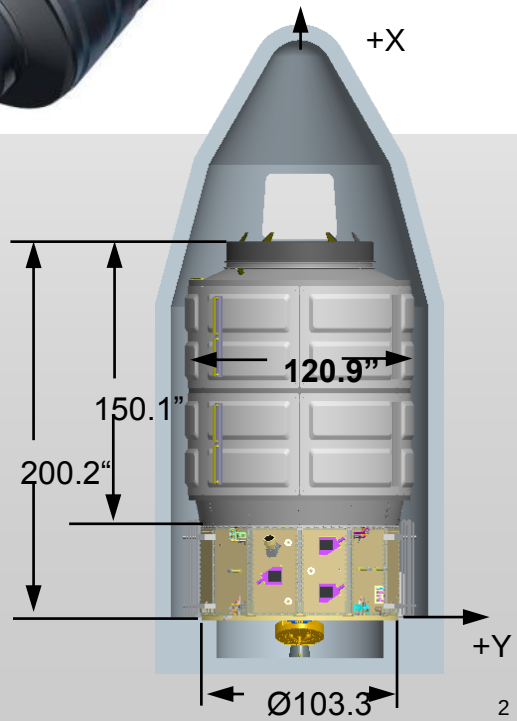

Cygnus Service Modules in Final Assembly and Test

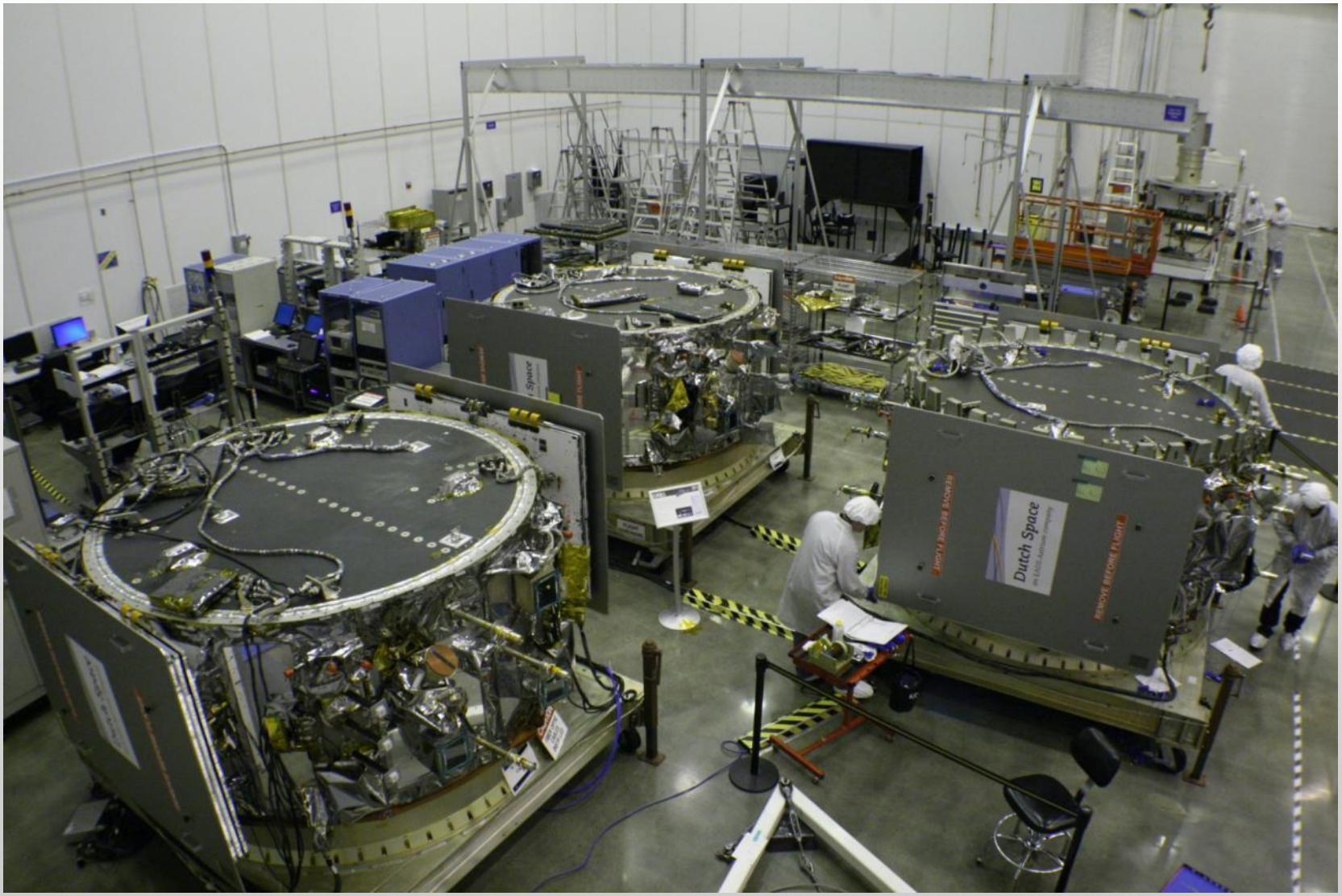

Cygnus Service Module in Test Chambers at Dulles

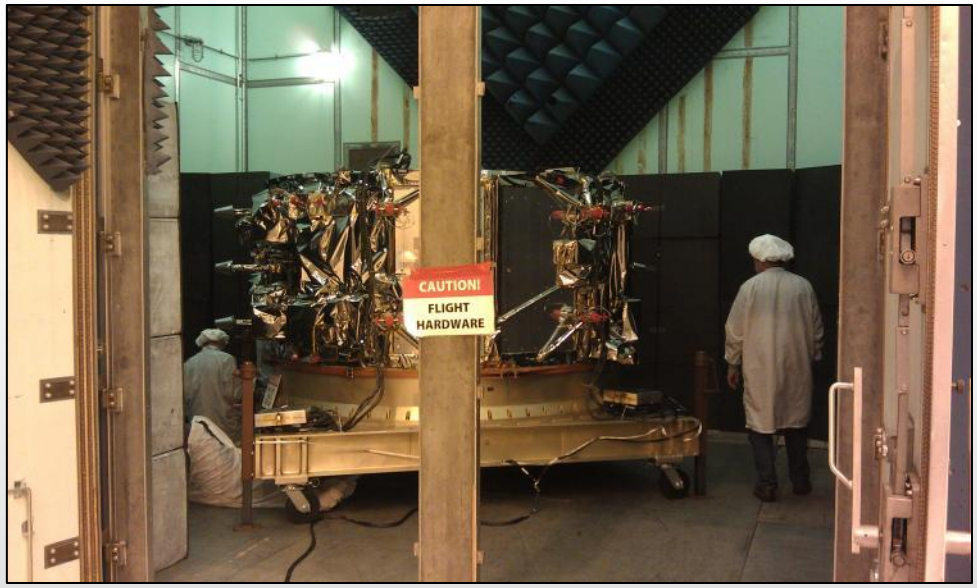

Enhanced Cygnus

Standard Cygnus

Enhanced Cygnus

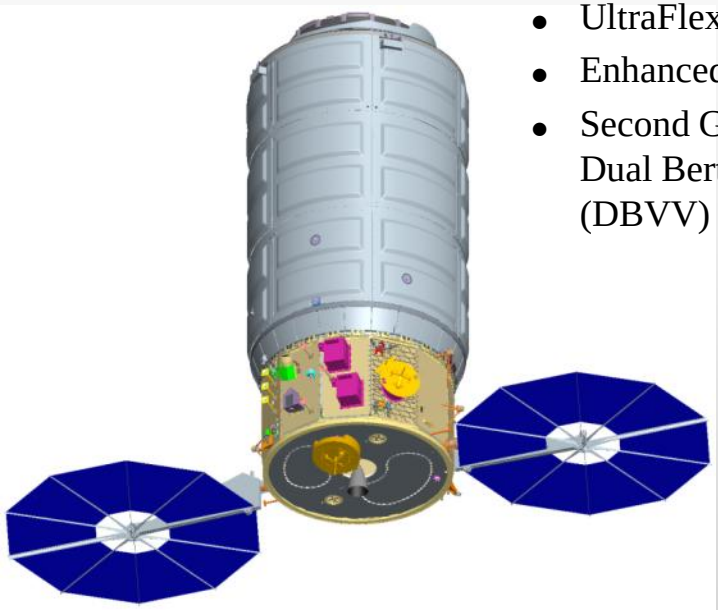

- Redesigned Structure
- UltraFlex Solar Array
- Enhanced PCM
- Second Grapple Fixture For Dual Berthed Visiting Vehicle (DBVV) Capability

- Cygnus Will Implement A Larger PCM and Design Improvements To Achieve Significant Increase In Cargo Mass Capability (Cygnus Performance Enhancement Program (CPEP)
- Changes Will Be Implemented On Orb-4 Through Orb-8

Four PCM's in the Clean Room at TAS-I

Demo Mission PCM Cargo Loading at Wallops

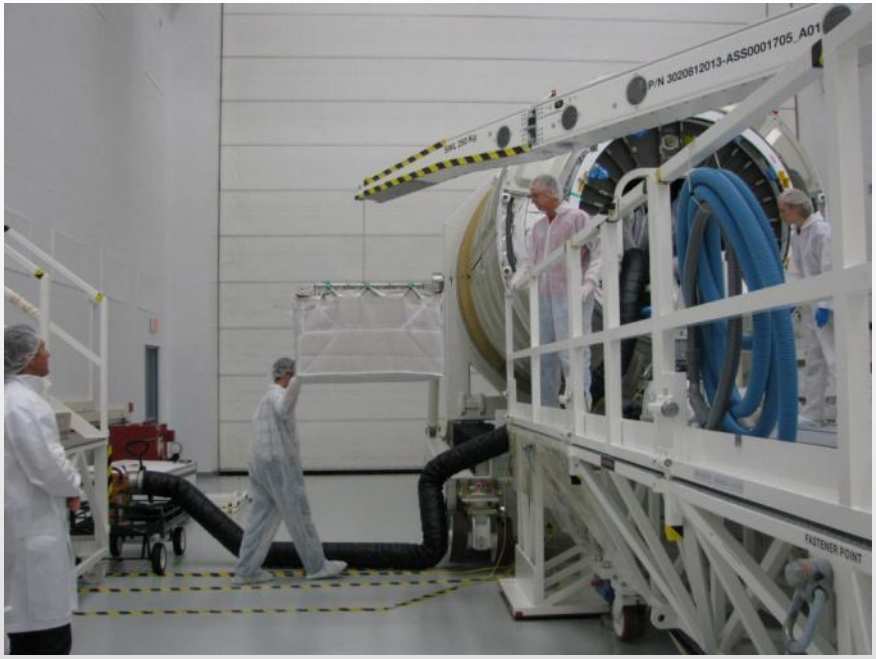

Antares Overview

Designed to Provide Versatile, Cost-effective Access to Space for Medium-Class Payloads

Currently Under Contract to Support NASA International Space Station (ISS) Re-supply Missions

PAYLOAD FAIRING
- 3.9 meter diameter by 9.9 meter envelope
- Composite Construction
- Non-contaminating Separation Systems

STAGE 2
- ATK CASTOR® 30/30B Solid Motor with Active Thrust Vectoring
- Orbital MACH avionics module
- Cold-gas 3-axis Attitude Control System

STAGE 1
- Liquid Oxygen/RP-1 fueled
- Two AJ26 engines with independent thrust vectoring
- 3.9 meter booster derived from heritage Zenit design

Antares and Cygnus Evolution

Demo, Orb-1,Orb-2

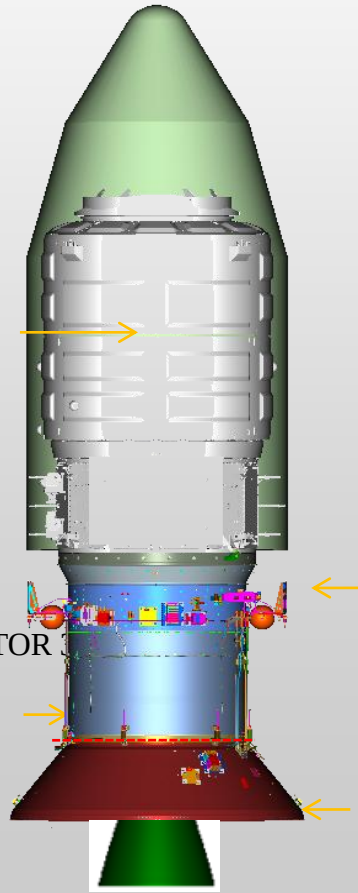

Orb-3

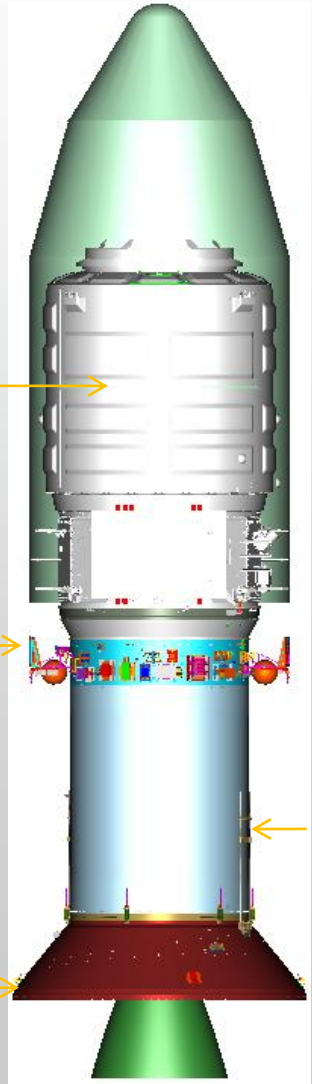

Orb-4-8

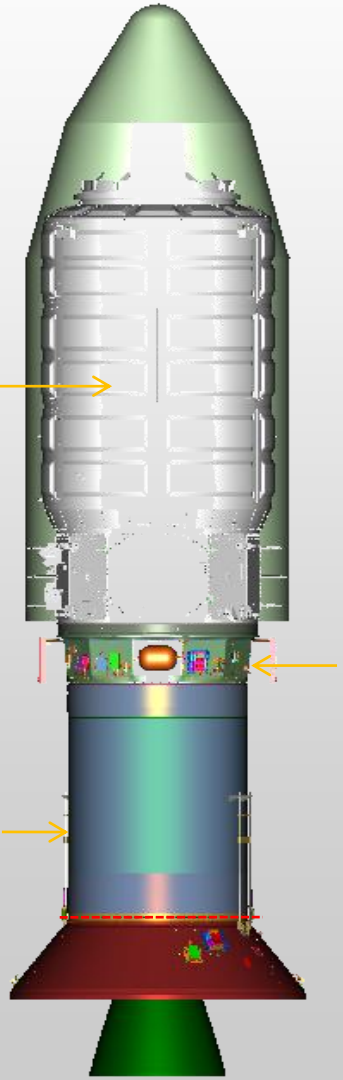

Antares Hardware Progress

Orbital
Innovation You Can Count On®

Booster

Hot Fire, Test Flight, and Cygnus Demo Boosters Being Processed @ Wallops

CRS Launch Cores Delivered

ORB-1 Launch Booster Tankage Complete

Main Engine System

- ✓1st Seven Engines Successfully Hot-fire Tested @ Stennis
- ✓ 1st Six Engines Delivered to Wallops
- ✓Hot Fire Test Engines Integrated into Engine Section

Upper Stack

- ✓Upper Stack & Cygnus Pathfinder Complete
- ✓Upper Stack Integration @ Wallops
- ✓Avionics Testing Complete

Wallops Launch Site Progress

Orbital
Innovation You Can Count On®

Horizontal Integration Facility Complete

Launch Pad Completed

- ✓Ramp & Flame Trench Complete
- ✓Tanks Installed
- ✓Deluge Tower Complete
- ✓Final Verification Underway

Infrastructure In-Place

- ✓ Ground Support Equipment and Rocket Transporter Delivered
- ✓Transporter Erector Launcher Tested

Wallops Launch Pad Completed

Antares Core Rollout for Launch Pad Hot Fire

Antares Launch Pad Fit Check

Antares First Stage During Fueling Test

First 2 Antares Flight Vehicles in Processing at Wallops HIF

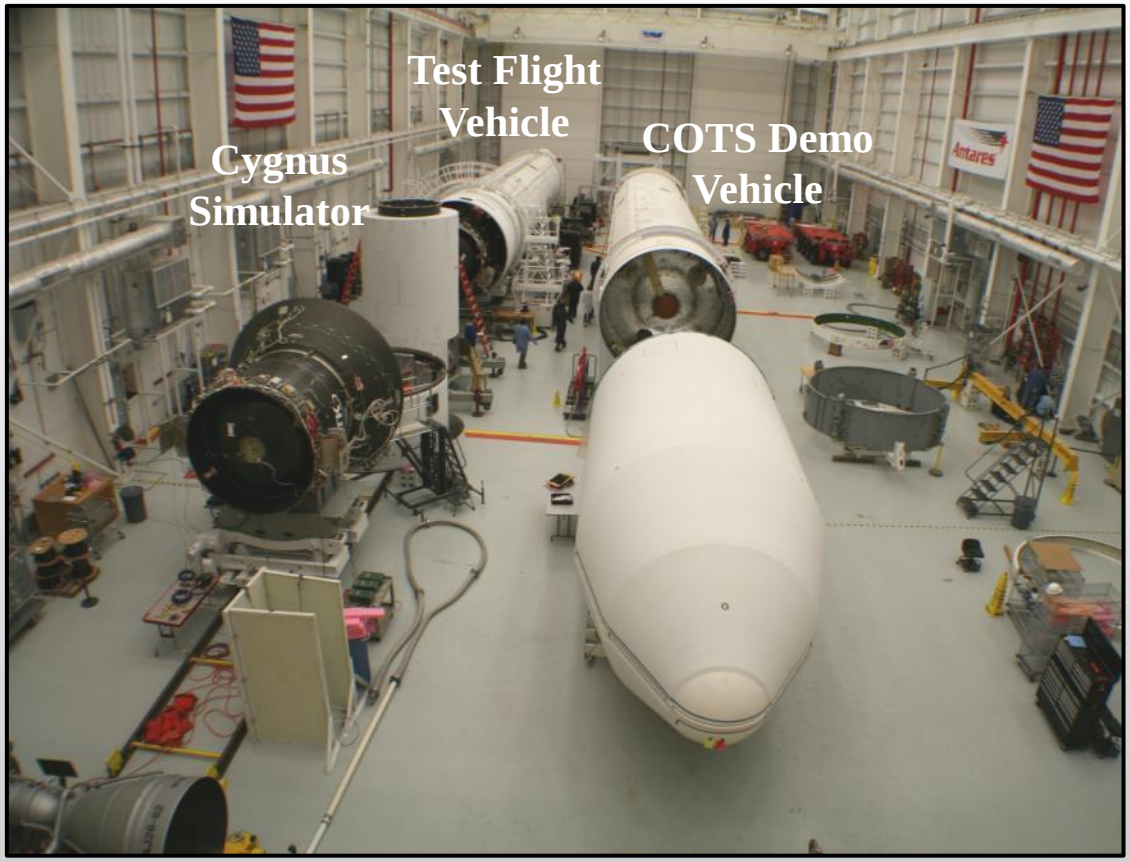

E12 Engine Test Firing At Stennis Test Center

Summary

- **Wallops Flight Facility Spacecraft And Launch Preparation Capabilities Are Essentially Complete**
- **Cygnus Demonstration Flight PCM And GSE At Wallops Are Ready For Flight Cargo**
- **Cygnus Demonstration Flight Service Module Complete At Dulles Ready To Ship To Wallops**
- **Antares Ready For Hot Fire Test In February And Maiden Flight In March 2013**
- **Joint Software Testing To Accommodate New ISS Software On Track For February 2013**
- **Verification And Safety Reviews For The COTS Demonstration Mission Are On Track**
- **COTS Demo Flight Will Be Ready for a Late Spring Mission to the ISS**
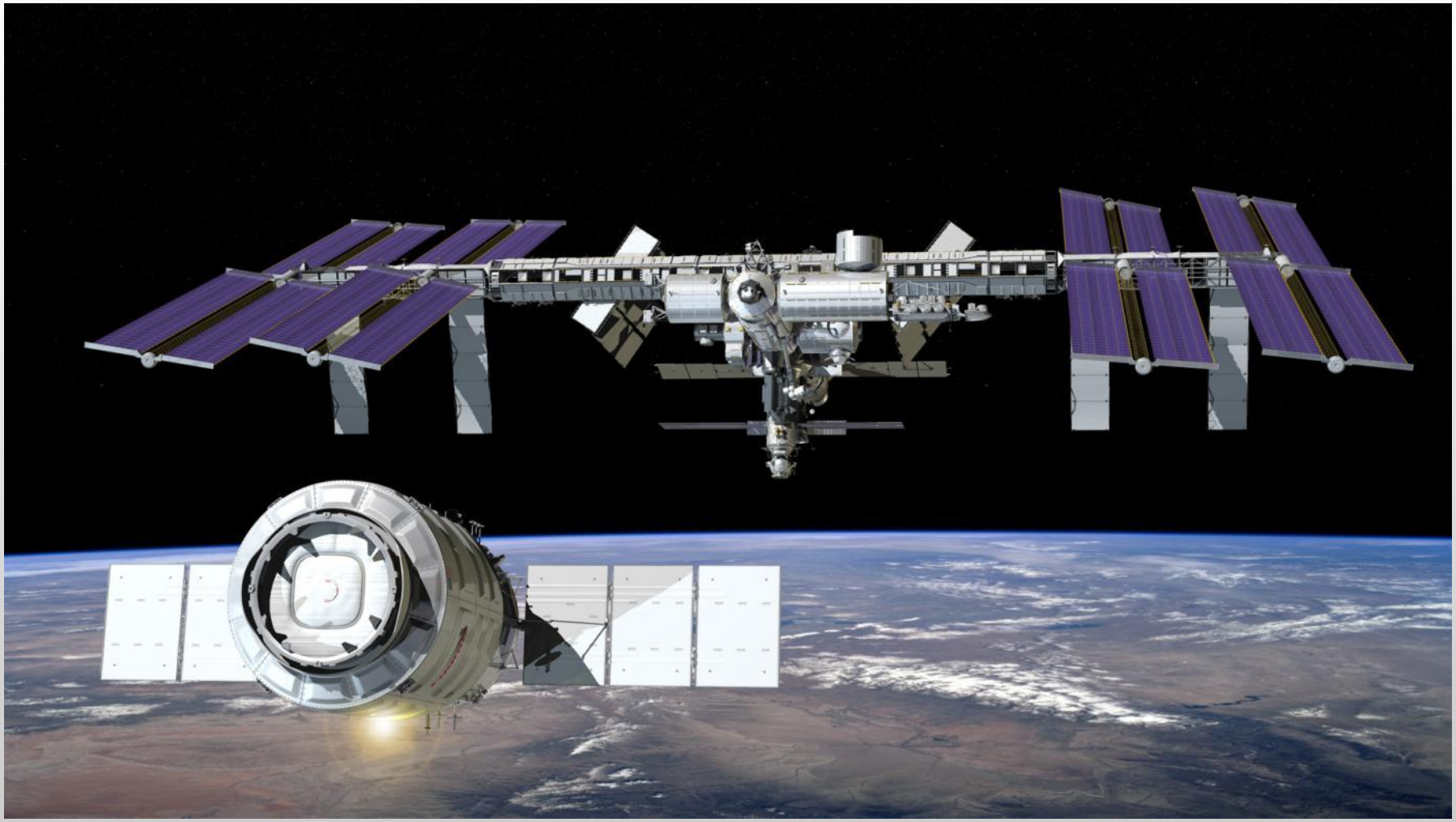
Thank You