RNAV (RNP) Z RWY 8L
HARTSFIELD/JACKSON ATLANTA INTL (ATL)

APP CRS	Rwy ldg	8800
095°	TDZE	1015
	Apt Elev	1026

RNP AR APCH - GPS.

For uncompensated Baro-VNAV systems, procedure NA below -5°C or above 54°C. For inop ALS, increase RNP 0.15 all Cats RVR to 5500. Simultaneous approach authorized. Arrival from BOLND NA during simultaneous triple approaches.

ALSF-2

MISSED APPROACH: Climb to 1500 then climbing left turn to 3500 direct TROYS and hold.

D-ATIS	ATLANTA	ATLANTA TOWER					ALL	GND CON			ALL
ARR 119.65	APP CON	8L-26R	8R-26L	9L-27R	9R-27L	10-28	RWYS	(8L-26R,8R-26L)	(9L-27R,9R-27L)	10-28	RWYS
DEP 125.55	127.9 379.9	119.1	125.325	123.85	119.3	119.5	254.4	121.9	121.75	121.65	254.4

CLNC DEL 118.1 | CPDLC

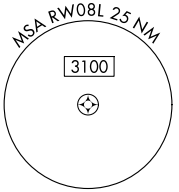

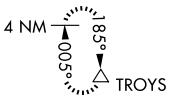

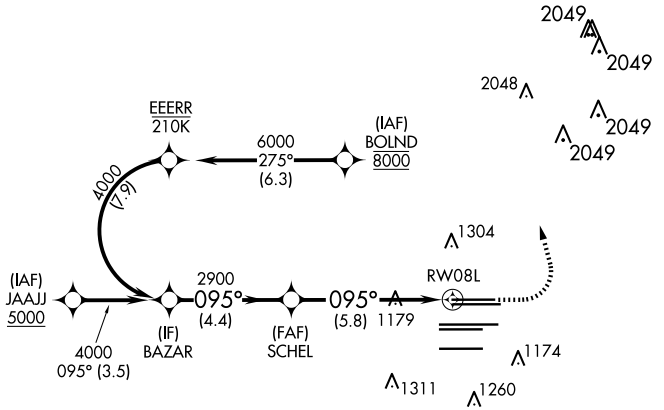

ELEV 1026 | D | TDZE 1015

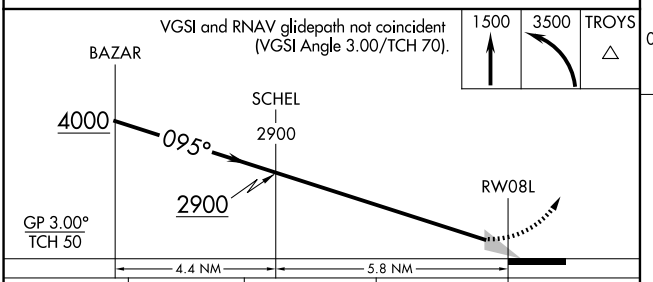

CATEGORY	A	B	C	D
RNP 0.15 DA	1380/35	365 (400-⅝)		
RNP 0.30 DA	1458/45	443 (500-⅞)		

AUTHORIZATION REQUIRED

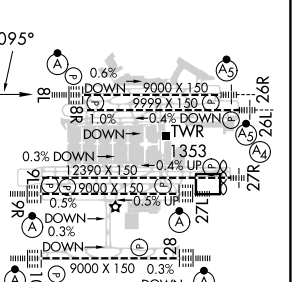

HIRL all Rwys
TDZ/CL Rwys 8L, 9R, 10, 26R, 27L and 28

SE-4, 20 MAR 2025 to 17 APR 2025

SE-4, 20 MAR 2025 to 17 APR 2025