ILS or LOC RWY 31
MINERAL WELLS RGNL (MWL)

LOC/DME I-VMH	APP CRS	Rwy ldg	5596
109.55	310°	TDZE	974
Chan 32 (Y)		Apt Elev	974

DME required.

NA Circling to Rwy 17-35 NA at night.
Autopilot coupled approach NA below 1500.

MISSED APPROACH: Climb to 1600 then climbing left turn to 3000 direct MQP VORTAC and hold.

ASOS	FORT WORTH CENTER	UNICOM
135.075	127.0 360.6	122.725 (CTAF) L

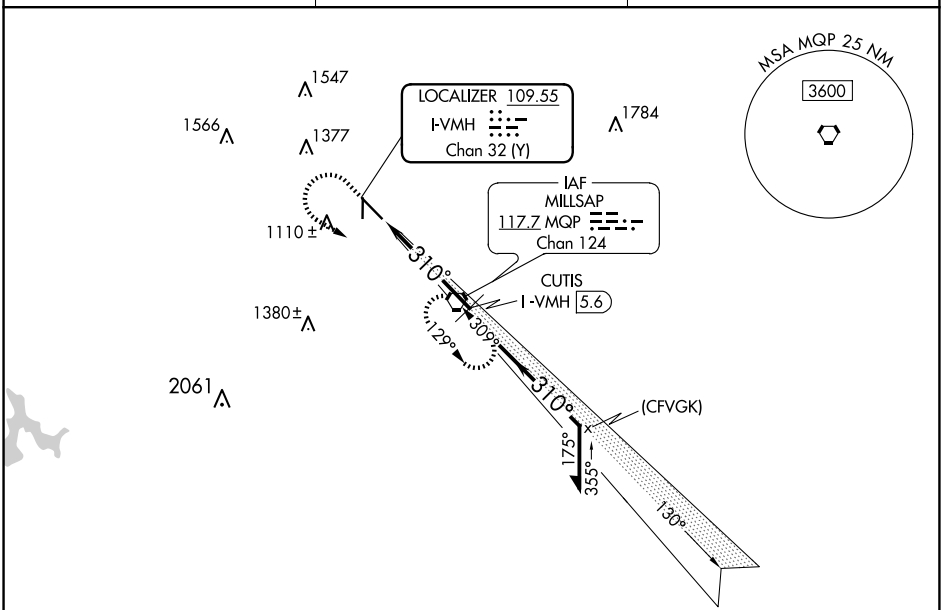

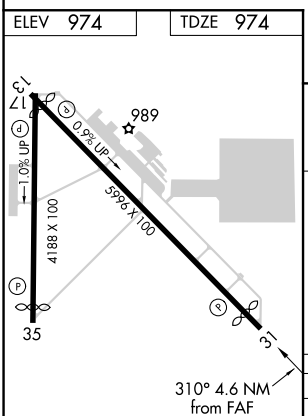

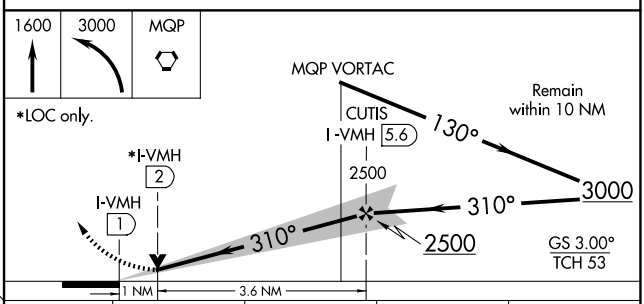

CATEGORY	A	B	C	D
S-ILS 31	1174-¾ 200 (200-¾)			
S-LOC 31	1340-1 366 (400-1)			
C CIRCLING	1420-1 446 (500-1)	1460-1 486 (500-1)	1740-2¼ 766 (800-2¼)	1740-2½ 766 (800-2½)

MIRL Rwys 13-31 and 17-35 L

SC-2, 17 APR 2025 to 15 MAY 2025