WAAS CH 56238 W27A	APP CRS 275°	Rwy ldg 4300 TDZE 976 Apt Elev 990

RNAV (GPS) RWY 27
ROBEN-HOOD (RQB)

RNP APCH - GPS.

Circling Rwy 32 NA at night. For uncompensated Baro-VNAV systems, LNAV/VNAV NA below -16°C or above 54°C.

MISSED APPROACH: Climb to 2900 direct HUSHU and hold.

AWOS-3P	MINNEAPOLIS CENTER	UNICOM
125.875	120.85 322.35	122.8 (CTAF) L

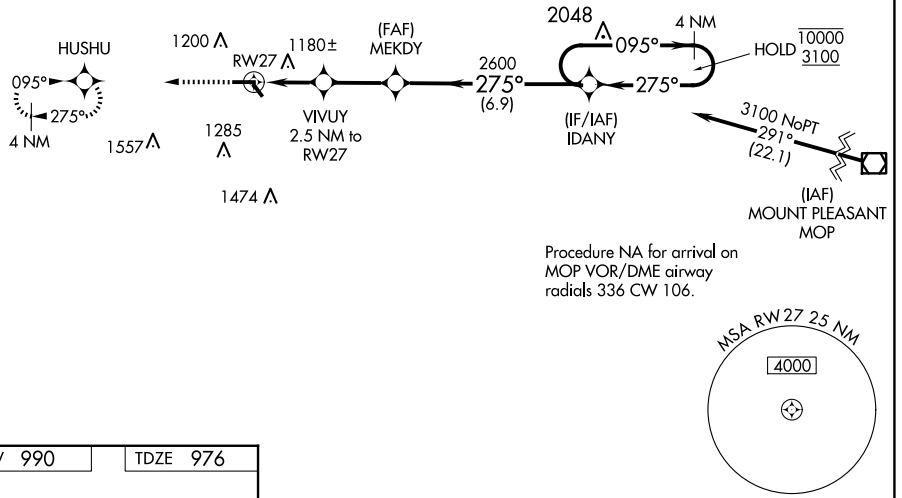

ELEV 990	TDZE 976

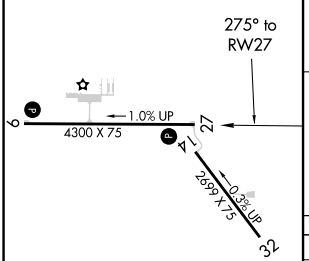

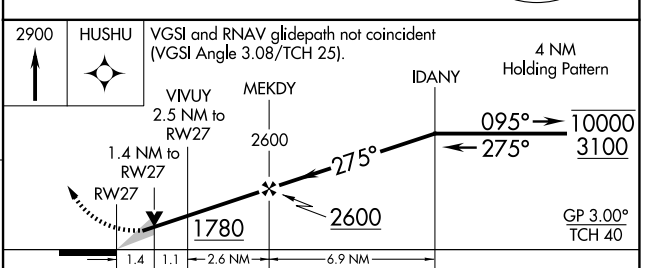

CATEGORY	A	B	C	D
LPV DA	1176-1 200 (200-1)			
LNAV/VNAV DA	1540-1⅝ 564 (600-1⅝)			
LNAV MDA	1440-1 464 (500-1)		1440-1⅜ 464 (500-1⅜)	
C CIRCLING	1500-1 510 (600-1)	1560-1 570 (600-1)	1700-2 710 (800-2)	1860-2¾ 870 (900-2¾)

REIL Rwys 9 and 27 L
MIRL Rwys 9-27 and 14-32 L

EC-1, 17 APR 2025 to 15 MAY 2025
EC-1, 17 APR 2025 to 15 MAY 2025