RNAV (GPS) RWY 26

MORIARTY MUNI (ØEØ)

WAAS CH 40039 W26A	APP CRS 259°	Rwy ldg 7702 TDZE 6193 Apt Elev 6204

RNP APCH - GPS.

For uncompensated Baro-VNAV systems, LNAV/VNAV NA below -27°C or above 54°C. Circling Rwy 17, 35 NA at night.

MISSED APPROACH: Climb to 9700 direct RIDSE and hold, continue climb-in-hold to 9700.

AWOS-3	ALBUQUERQUE CENTER	CTAF
118.05	133.65 284.6	122.9 L

Procedure NA for arrival on OTO VOR airway radials 035 CW 150.

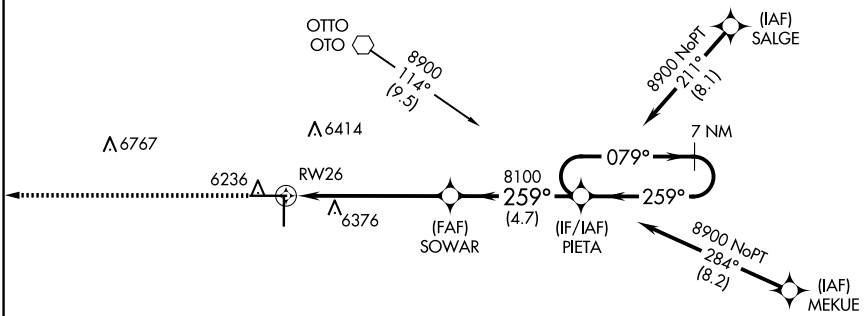

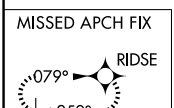

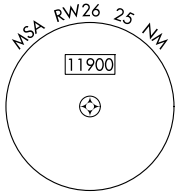

7565

ELEV 6204 TDZE 6193

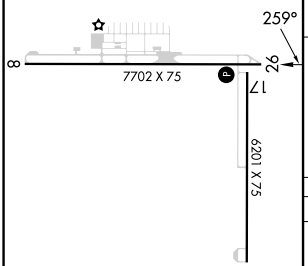

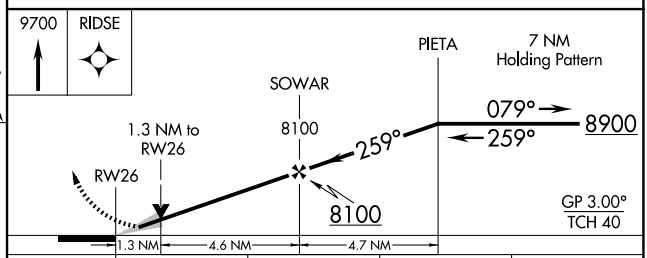

CATEGORY	A	B	C	D
LPV DA	6443-⅞ 250 (300-⅞)			NA
LNAV/VNAV DA	6443-⅞ 250 (300-⅞)			NA
LNAV MDA	6640-1 447 (500-1)		6640-1⅜ 447 (500-1⅜)	NA
C CIRCLING	6660-1 456 (500-1)	6680-1 476 (500-1)	6780-1½ 576 (600-1½)	NA

MIRL Rwy 8-26 L

SW-1, 12 JUN 2025 to 10 JUL 2025
SW-1, 12 JUN 2025 to 10 JUL 2025