APP CRS	Rwy ldg	4000
275°	TDZE	786
	Apt Elev	787

RNAV (GPS) RWY 27
VAN WERT COUNTY (VNW)

RNP APCH - GPS.

Circling NA to Rwys 18 and 36. Procedure NA at night. Rwy 27 helicopter visibility reduction below 1 SM NA.

MISSED APPROACH: Climbing right turn to 3000 direct DRIFF and hold.

AWOS-3	FORT WAYNE APP CON	UNICOM
125.175	127.2 284.6	123.0 (CTAF) L

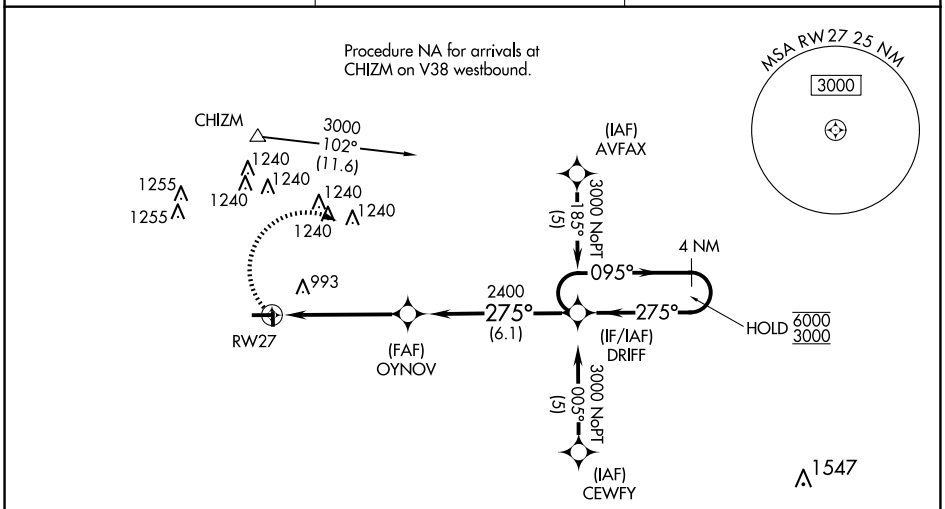

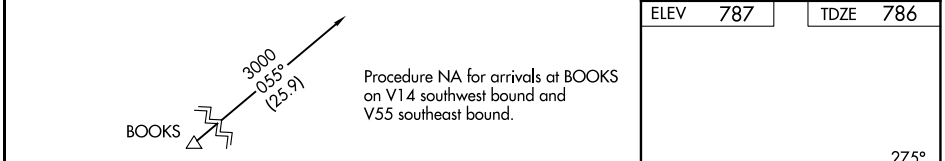

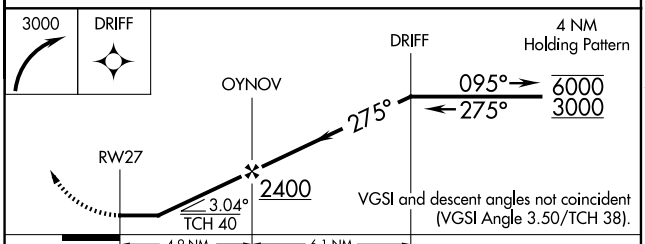

ELEV 787	TDZE 786

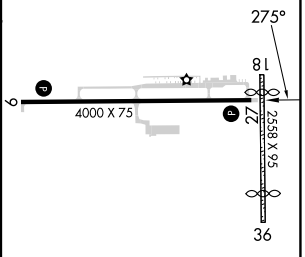

CATEGORY	A	B	C	D
LNAV MDA	1280-1	494 (500-1)	1280-1⅜ 494 (500-1⅜)	1280-1½ 494 (500-1½)
C CIRCLING	1340-1	553 (600-1)	1340-1½ 553 (600-1½)	1600-2¾ 813 (900-2¾)

MIRL Rwy 9-27 L
REIL Rwys 9 and 27 L

EC-2, 12 JUN 2025 to 10 JUL 2025
EC-2, 12 JUN 2025 to 10 JUL 2025