VOR/DME SYI	APP CRS	Rwy Ldg 5504
113.55	016°	TDZE 801
Chan 82 (Y)		Apt Elev 801

VOR RWY 36
BOMAR FLD/SHELBYVILLE MUNI (SYI)

DME required.

When local altimeter setting not received, use Tullahoma altimeter setting and increase all MDAs 80 feet, and S-36 Cat C/D visibility ¼ SM.
VDP NA when using Tullahoma altimeter setting.

MISSED APPROACH: Climb to 2000 then climbing left turn to 3000 direct SYI VOR/DME and hold.

AWOS-3	NASHVILLE APP CON	UNICOM
119.275	118.4 360.7	122.8 (CTAF) L

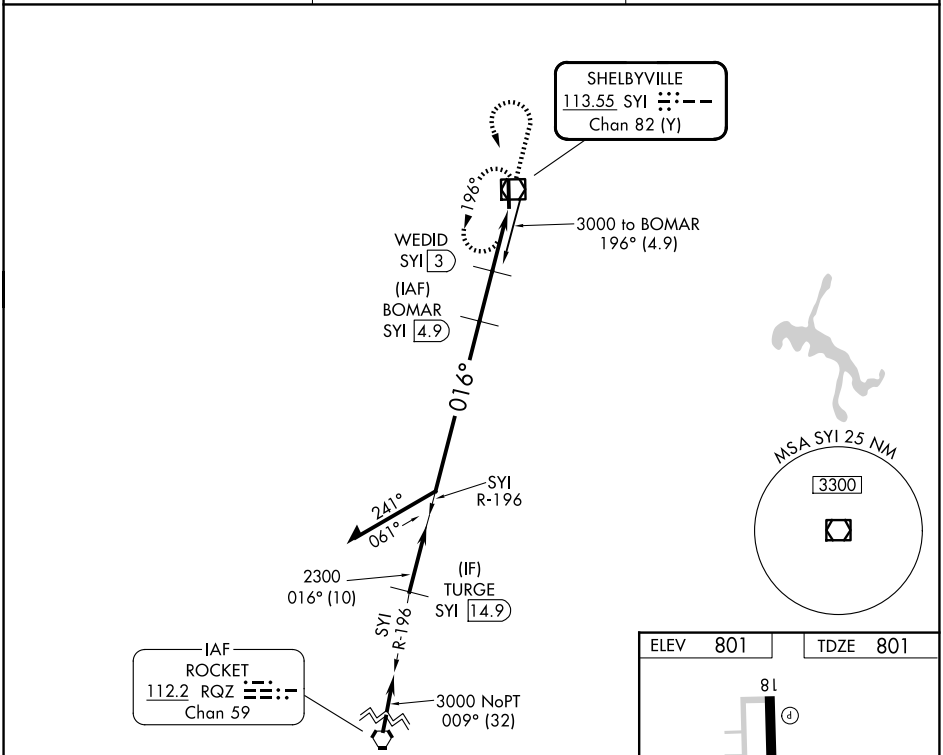

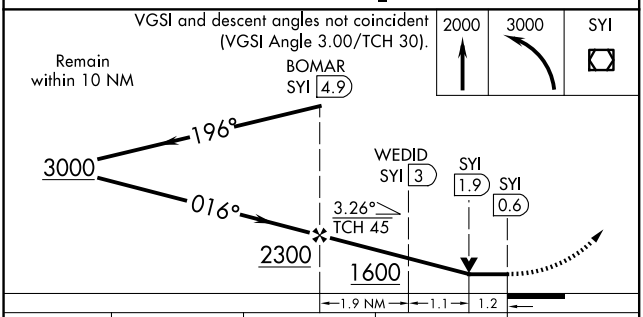

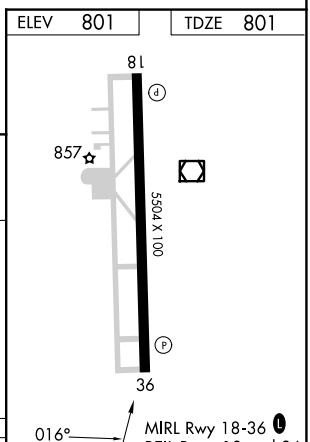

CATEGORY	A	B	C	D
S-36	1220-1 419 (500-1)		1220-1⅛ 419 (500-1⅛)	
CIRCLING	1260-1 459 (500-1)	1420-1 619 (700-1)	1780-3 979 (1000-3)	

FAF to MAP 4.2 NM

Knots	60	90	120	150	180
Min:Sec	4:12	2:48	2:06	1:41	1:24

SE-1, 04 SEP 2025 to 02 OCT 2025

SE-1, 04 SEP 2025 to 02 OCT 2025