WAAS CH 45842 W21A	APP CRS 210°	Rwy ldg 3800 TDZE 800 Apt Elev 800

RNAV (GPS) RWY 21
FORT ATKINSON MUNI (61C)

RNP APCH.

NA

Rwy 21 helicopter visibility reduction below ¾ SM NA. Use Watertown altimeter setting; when not received use Southern Wisconsin Rgnl altimeter setting and increase all MDA 20 feet, increase LP Cat C visibility ⅛ SM.

MISSED APPROACH: Climb to 3000 direct CIPOM and hold.

RYV AWOS-3	MADISON APP CON *	CTAF
119.975	120.1 350.3	122.9 L

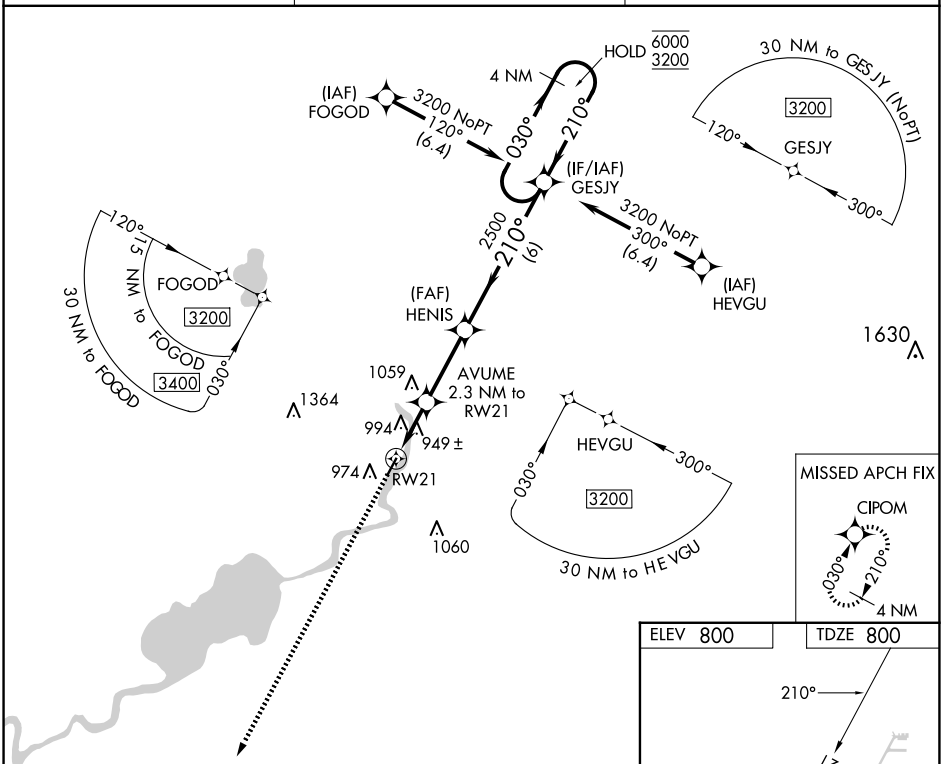

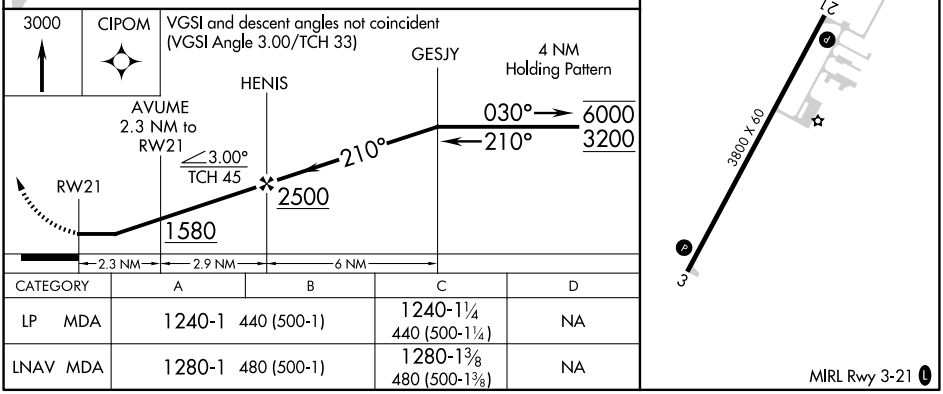

CATEGORY	A	B	C	D
LP MDA	1240-1 440 (500-1)		1240-1¼ 440 (500-1¼)	NA
LNAV MDA	1280-1 480 (500-1)		1280-1⅜ 480 (500-1⅜)	NA

EC-3, 04 SEP 2025 to 02 OCT 2025
EC-3, 04 SEP 2025 to 02 OCT 2025