KILNS FIVE DEPARTURE (RNAV)

(KILNS5.KILNS) 21MAR24

LANCASTER, SOUTH CAROLINA
LANCASTER COUNTY-MC WHIRTER FLD (LKR)

CHARLOTTE DEP CON
120.05 307.8
AWOS-3
120.825
GCO
121.725
UNICOM (CTAF)
122.725

RNAV 1 - DME/DME/IRU or GPS.
RADAR required.

TOP ALTITUDE: 3000

NOTE: For turbojets only.
NOTE: Transponder code will be issued via PDC or Charlotte CLNC DEL.
NOTE: Upon reaching 10000 MSL, accelerate to and maintain 280K, if unable advise ATC.
NOTE: If unable to accept climb rates, advise ATC on initial contact.

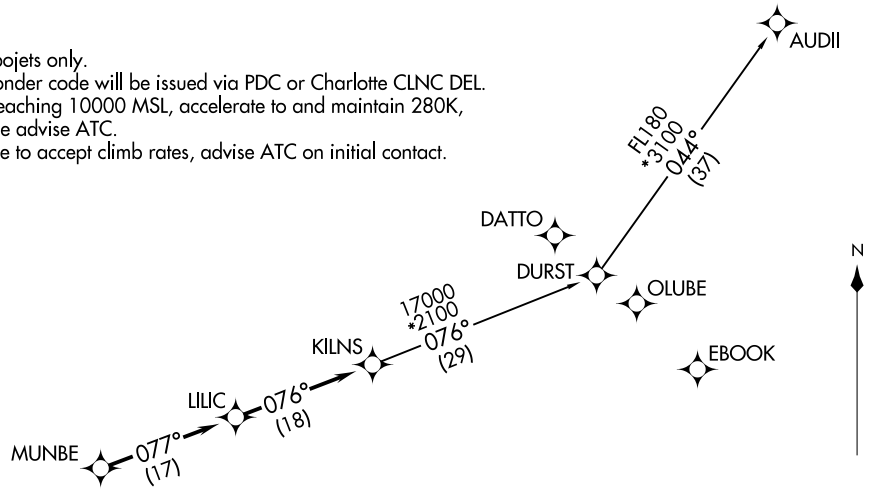

TAKEOFF MINIMUMS
Rwys 6, 24: Standard.

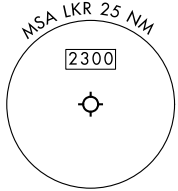

DEPARTURE ROUTE DESCRIPTION

Climb on heading assigned by ATC, on RADAR vectors to MUNBE, then on depicted route to KILNS, then on AUDII Transition. Maintain 3000. Expect clearance to filed altitude within 10 minutes after departure.

AUDII TRANSITION (KILNS5.AUDII)

NOTE: Chart not to scale.

(KILNS5.KILNS) 24081
KILNS FIVE DEPARTURE (RNAV)
AL-5853 (FAA)
LANCASTER COUNTY-MC WHIRTER FLD (LKR)
LANCASTER, SOUTH CAROLINA