| APP CRS | Rwy Ldg | 8012 |
|---|---|---|
| 076° | TDZE | 729 |
| | Apt Elev | 729 |

# RNAV (RNP) Y RWY 7R
## GENERAL MITCHELL INTL (MKE)

RF required. RNP AR APCH.

For uncompensated Baro-VNAV systems, procedure NA below -20°C or above 54°C. For inop ALS, increase RNP 0.10 all Cats visibility to 1¼ . For inop ALS, increase RNP 0.15 all Cats visibility to 1⅝ . For inop ALS, increase RNP 0.30 all Cats visibility 1¾ .

MALSR

MISSED APPROACH: Climb to 3700 on the RNAV missed approach route to PROOT and hold.

| D-ATIS | MILWAUKEE APP CON | MILWAUKEE TOWER | GND CON | CLNC DEL | CPDLC |
|---|---|---|---|---|---|
| 126.4 | 126.5 307.0 | 124.575 269.05 | 121.8 263.125 | 120.8 | |

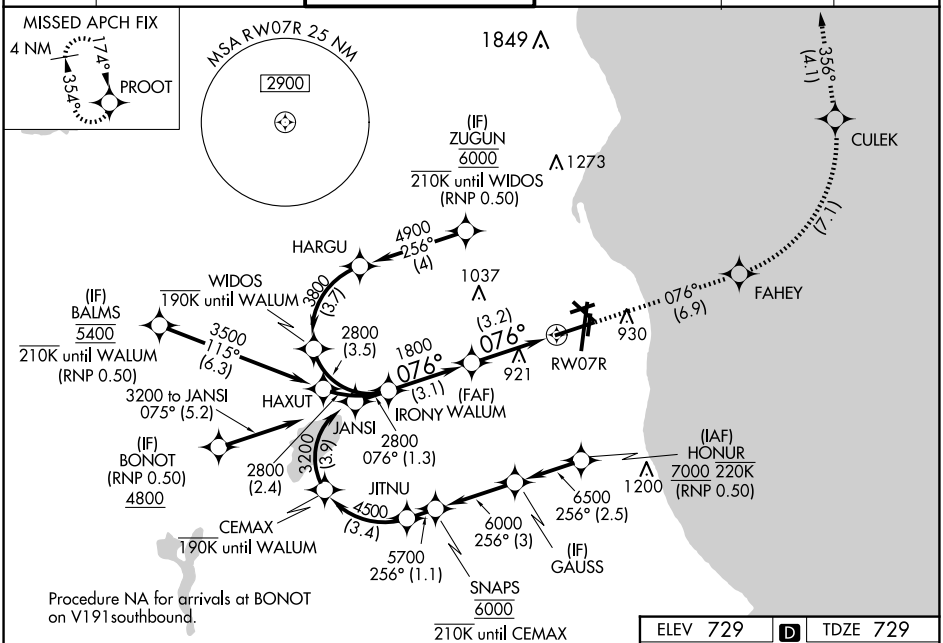


Procedure NA for arrivals at BONOT on V191southbound.

See planview for multiple IF locations.

| 3700 | FAHEY | | CULEK | | PROOT |
|---|---|---|---|---|---|
| tr 076° | | | | tr 356° | |

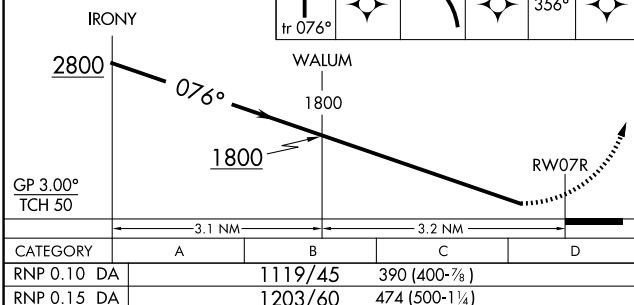


| CATEGORY | A | B | C | D |
|---|---|---|---|---|
| RNP 0.10 DA | 1119/45 | 390 (400-⅞ ) | | |
| RNP 0.15 DA | 1203/60 | 474 (500-1¼) | | |
| RNP 0.30 DA | 1255-1⅜ | 526 (600-1⅜) | | |

AUTHORIZATION REQUIRED

ELEV 729 D TDZE 729

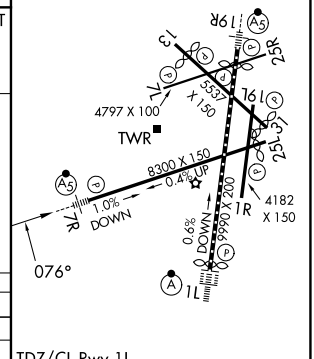


TDZ/CL Rwy 1L
REIL Rwys 1R, 7L, 13, 25L, 25R, and 31
HIRL Rwys 1L-19R and 7R-25L
MIRL Rwys 1R-19L, 13-31 and 7L-25R

EC-3, 30 OCT 2025 to 27 NOV 2025

EC-3, 30 OCT 2025 to 27 NOV 2025