LOC/DME I-JHW	APP CRS	Rwy ldg	5300
109.7	249°	TDZE	1721
Chan 34		Apt Elev	1723

ILS or LOC RWY 25
CHAUTAUQUA COUNTY/JAMESTOWN (JHW)

Circling to Rwy 13/31 NA at night. Autopilot coupled approach NA below 2420. VDP NA with Dunkirk altimeter setting. Cat D SI NA when using Dunkirk altimeter. When local altimeter setting not received, use Dunkirk altimeter setting and increase S-ILS 25 DA to 2161 and all MDA 200 feet; increase S-ILS 25 all Cats visibility ¾ mile; increase S-LOC 25 Cats A and B visibility to ¾, Circling Cats A and B 1¼ , increase S-LOC 25 Cats C and D visibility to 2, Circling Cats C visibility 2¾ and D visibility 3, DIPRE fix minimums increase S-LOC 25 Cats C and D visibility 1⅛ , and Circling Cats C visibility 2 and Cat D visibility 2¾ mile. For inoperative MALSR when using Dunkirk altimeter setting, increase S-ILS 25 all Cats visibility 1⅜ mile. VDP NA when using Dunkirk altimeter setting.

NA

MALSR

MISSED APPROACH: Climb to 2420 then climbing right turn to 3800 on heading 125° and I-JHW LOC course NE to KRAUS INT/ I-JHW 6.6 DME and hold.

AWOS-3PT	BUFFALO APP CON ★	UNICOM
118.425	126.05	122.975 (CTAF) L

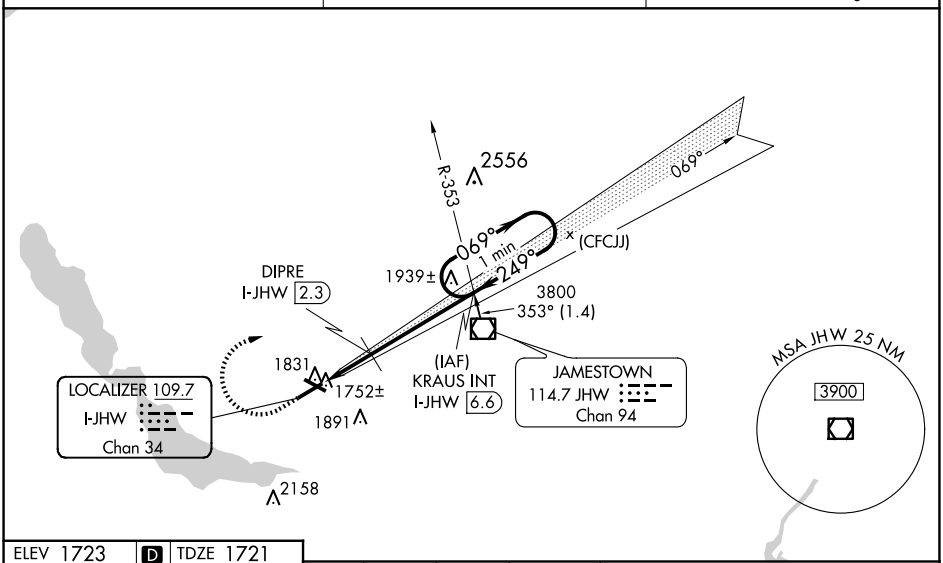

ELEV 1723 D TDZE 1721

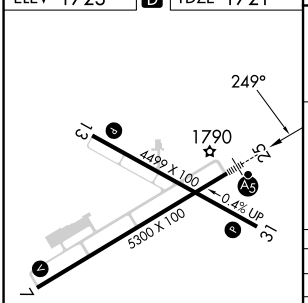

REIL Rwy 31 L
MIRL Rwy 13-31 L
HIRL Rwy 7-25 L

FAF to MAP 6.4 NM					
Knots	60	90	120	150	180
Min:Sec	6:23	4:15	3:11	2:33	2:08

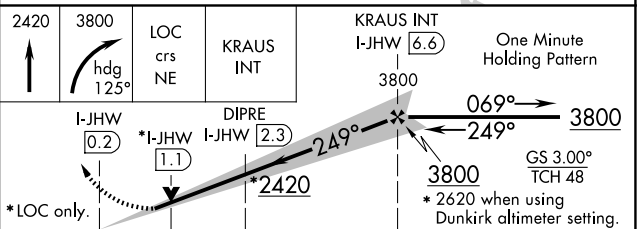

CATEGORY	A	B	C	D
S-ILS 25	1971-½ 250 (300-½)			
S-LOC 25	2420-½ 699 (700-½)		2420-1½ 699 (700-1½)	
C CIRCLING	2420-1 697 (700-1)		2420-2 697 (700-2)	2420-2¼ 697 (700-2¼)
DIPRE FIX MINIMUMS (DME REQUIRED)				
S-LOC 25	2080-½ 359 (400-½)		2080-⅝ 359 (400-⅝)	
C CIRCLING	2200-1 477 (500-1)		2260-1½ 537 (600-1½)	2340-2 617 (700-2)

NE-2, 30 OCT 2025 to 27 NOV 2025