VORTAC OCN 115.3 Chan 100	APP CRS 096°	Rwy Ldg N/A TDZE N/A Apt Elev 28

VOR-A

BOB MAXWELL MEML AIRFIELD (OKB)

Rwy 7 helicopter visibility reduction below 1 SM NA. Circling Rwy 7 NA at night. When local altimeter setting not received, use CRQ altimeter setting and increase all MDAs 60 feet.

MISSED APPROACH: Climbing left turn to 5600 on heading 030° and on OCN VORTAC R-083 to VISTA INT and hold, continue climb-in-hold to 5600.

ASOS	SOCAL APP CON	UNICOM
127.8	127.3 323.0	122.725 (CTAF) L

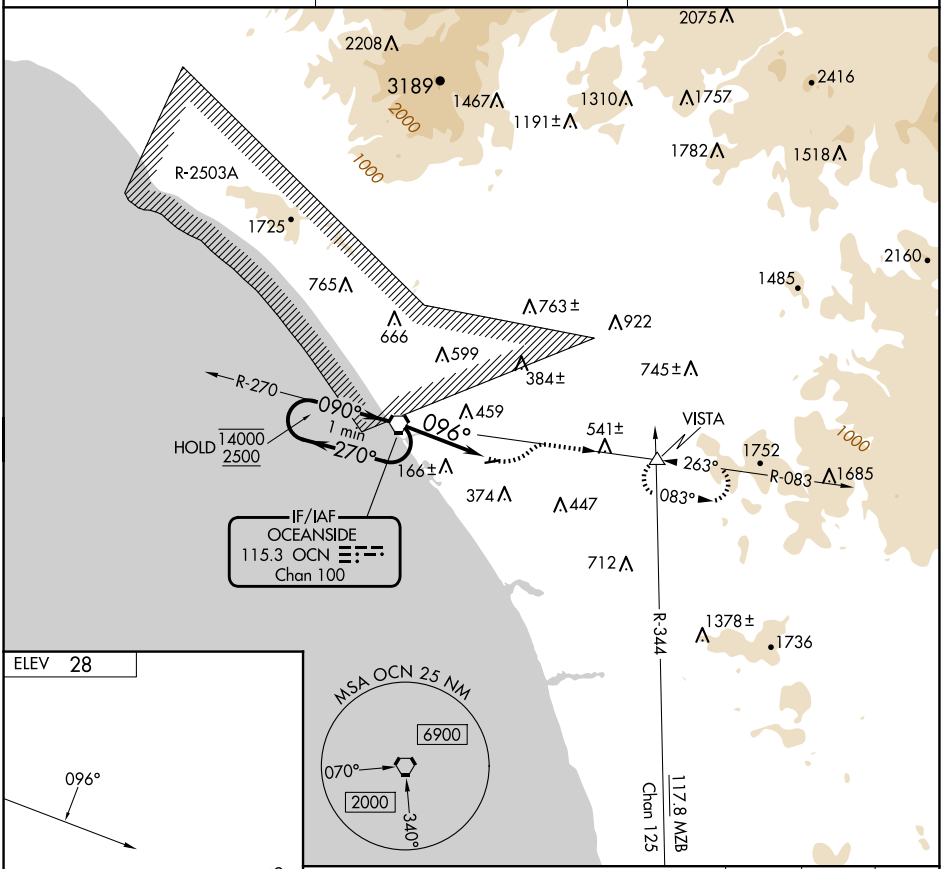

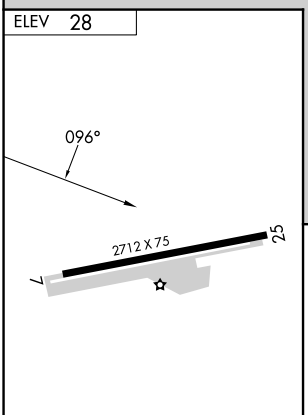

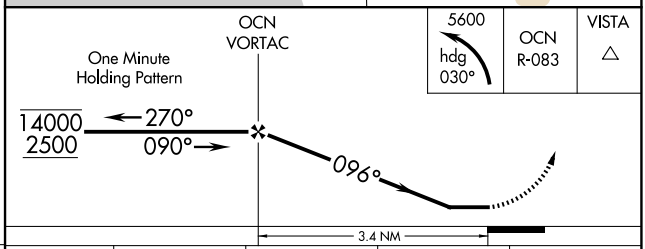

FAF to MAP 3.4 NM					
Knots	60	90	120	150	180
Min:Sec	3:24	2:16	1:42	1:21	1:08

CATEGORY	A	B	C	D
CIRCLING	980-1¼ 952 (1000-1¼)	980-1½ 952 (1000-1½)	NA	

SW-3, 30 OCT 2025 to 27 NOV 2025