ATIS
135.575 269.9
GND CON
121.6 275.8
ELLINGTON TOWER
126.05 253.5
HOUSTON DEP CON
134.45 284.0

NOTE: RNAV 1.
NOTE: RADAR required.
NOTE: ATC assigned only.
NOTE: DME/DME/IRU or GPS required.
NOTE: For non-GPS equipped aircraft, LCH, LLA, TBD, and LEV DME's must be operational.

TOP ALTITUDE: ASSIGNED BY ATC

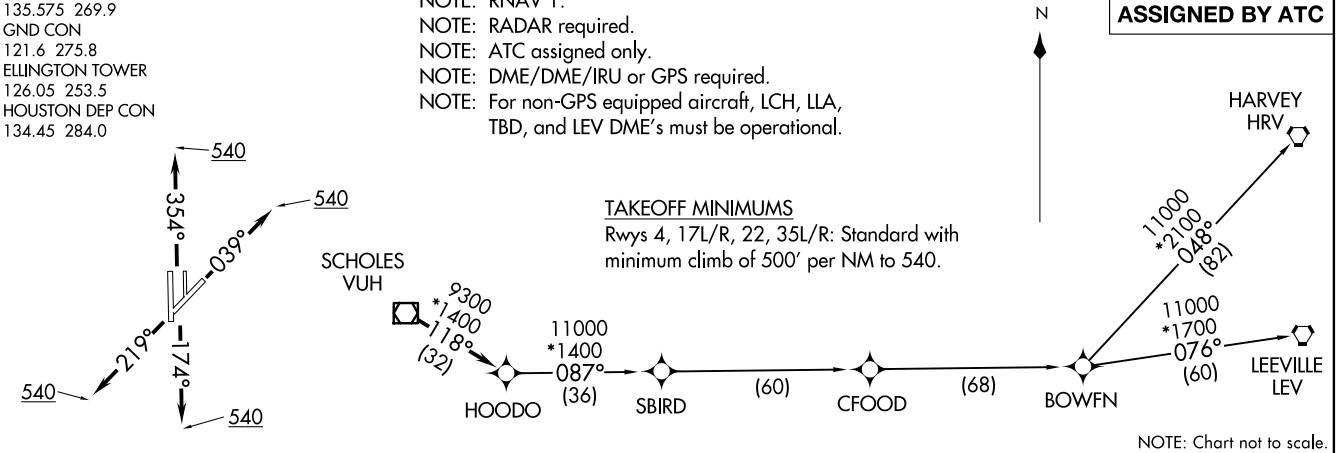

TAKEOFF MINIMUMS
Rwys 4, 17L/R, 22, 35L/R: Standard with minimum climb of 500' per NM to 540.

NOTE: Chart not to scale.

DEPARTURE ROUTE DESCRIPTION

TAKEOFF RUNWAY 4: Climb on heading 039° to 540, for RADAR vectors to VUH VOR/DME, thence . . . .
TAKEOFF RUNWAYS 17L/R: Climb on heading 174° to 540, for RADAR vectors to VUH VOR/DME, thence . . . .
TAKEOFF RUNWAY 22: Climb on heading 219° to 540, for RADAR vectors to VUH VOR/DME, thence . . . .
TAKEOFF RUNWAYS 35L/R: Climb on heading 354° to 540, for RADAR vectors to VUH VOR/DME, thence . . . .

. . . . on track 118° to HOODO, then on (transition). Maintain ATC assigned altitude.
Expect filed altitude 10 minutes after departure.

BOWFN TRANSITION (HOODO7.BOWFN)
CFOOD TRANSITION (HOODO7.CFOOD)
HARVEY TRANSITION (HOODO7.HRV)
LEEVILLE TRANSITION (HOODO7.LEV)
SBIRD TRANSITION (HOODO7.SBIRD)