25331

ILS RWY 23 (SA CAT I)
TRI-CITIES (TRI)

LOC I-TRI	APP CRS	Rwy Ldg	8000
109.9	230°	TDZE	1518
		Apt Elev	1519

ADF or RADAR required.

Requires specific OPSPEC, MSPEC, or LOA approval and use of HUD to DH. CAUTION: Air traffic control tower 1634 feet MSL located 940 feet right of runway centerline 357 feet from runway threshold. Procedure NA when tower closed.

ALSF-2

MISSED APPROACH: Climb to 3800 direct BOOIE LOM/ RADAR and hold.

ATIS	TRI-CITY APP CON ★	TRI-CITY TOWER ★	GND CON	UNICOM
118.25	134.425 349.0	119.5 (CTAF) 257.8	121.7 348.6	122.95

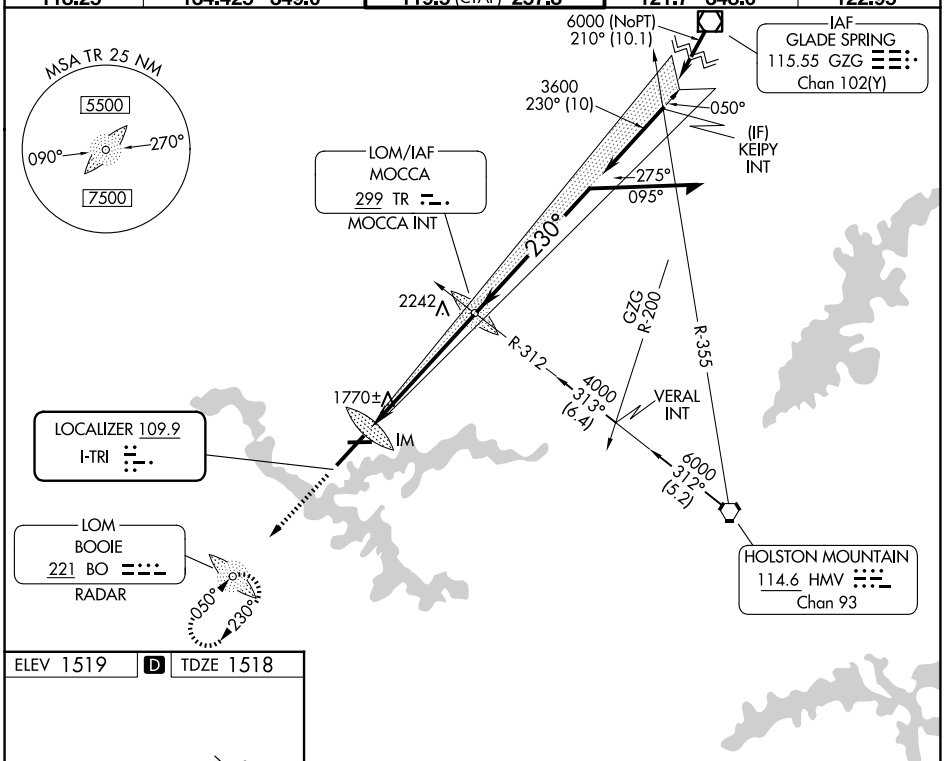

ELEV 1519 | D | TDZE 1518

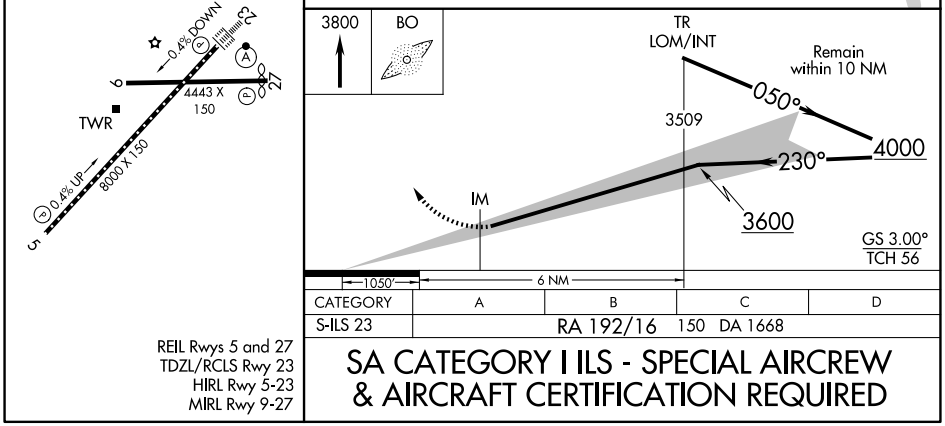

CATEGORY	A	B	C	D
S-ILS 23	RA 192/16 150 DA 1668			

REIL Rwys 5 and 27
TDZL/RCLS Rwy 23
HIRL Rwy 5-23
MIRL Rwy 9-27

SA CATEGORY I ILS - SPECIAL AIRCREW & AIRCRAFT CERTIFICATION REQUIRED

SE-1, 25 DEC 2025 to 22 JAN 2026

SE-1, 25 DEC 2025 to 22 JAN 2026