SUMTER, SOUTH CAROLINA

HI-TACAN Z RWY 22R

TACAN SSC Chan 38	APCH CRS 222°		22R	22L
		Rwy ldg	10,014	8014
		TDZE	240	235
		Arpt Elev	241	241

[USAF] SHAW AFB (KSSC)

RADAR required when R-6002 active.

* When ALS inop, increase vis to 1½ miles.
** When ALS inop, increase vis to 1⅜ miles.

ALSF-1

MISSED APPROACH: Climbing to 2000, intercept SSC TACAN R-223 to PINIE and hold.

ATIS★	APP CON★	TOWER★	GND CON
132.125 270.1	125.4 318.1	126.65 254.25	126.1 275.8

USAF Only: When Rwy 4L VGSI inop, circling to Rwy 4L at night requires approval from MAJCOM director of Ops or equivalent. Terrain 242′ MSL, 200′ prior to threshold.

USAF Only: When VGSI inop, sidestep to Rwy 22L, circling to Rwy 22L at night requires approval from MAJCOM Director of Ops or equivalent. Terrain 239′ MSL, 200′ prior to threshold, 200′ right of course.

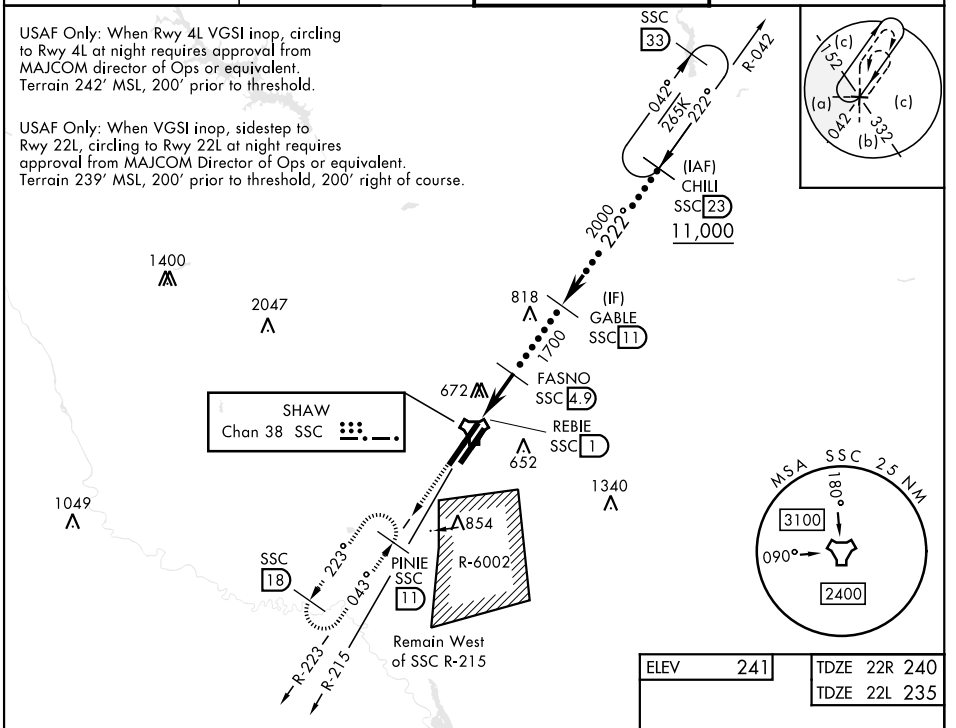

EMERG SAFE ALT 100 NM 3800

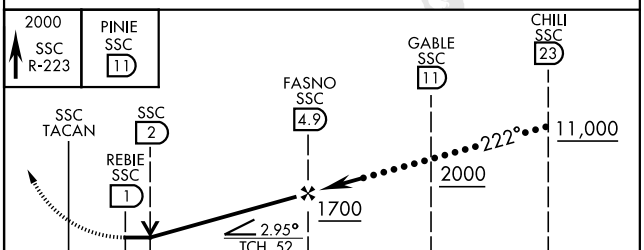

CATEGORY	C	D	E
S-22R*	760/55 520 (600-1)		
SIDESTEP 22L**	760/55 505 (600-1)		
CIRCLING	1000-2¼ 759 (800-2¼)	1000-2½ 759 (800-2½)	1000-2¾ 759 (800-2¾)

ELEV 241	TDZE 22R 240
	TDZE 22L 235

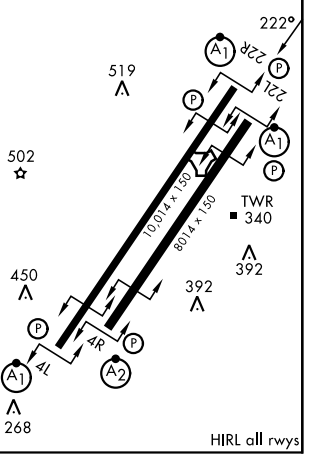

SE-2, 19 MAR 2026 to 16 APR 2026

SE-2, 19 MAR 2026 to 16 APR 2026