TOP ALTITUDE: ASSIGNED BY ATC

RNAV 1 - DME/DME/IRU or GPS.
RADAR required for non-GPS equipped aircraft.
RADAR required.

TAKEOFF MINIMUMS
Rwys 16, 34: Standard.

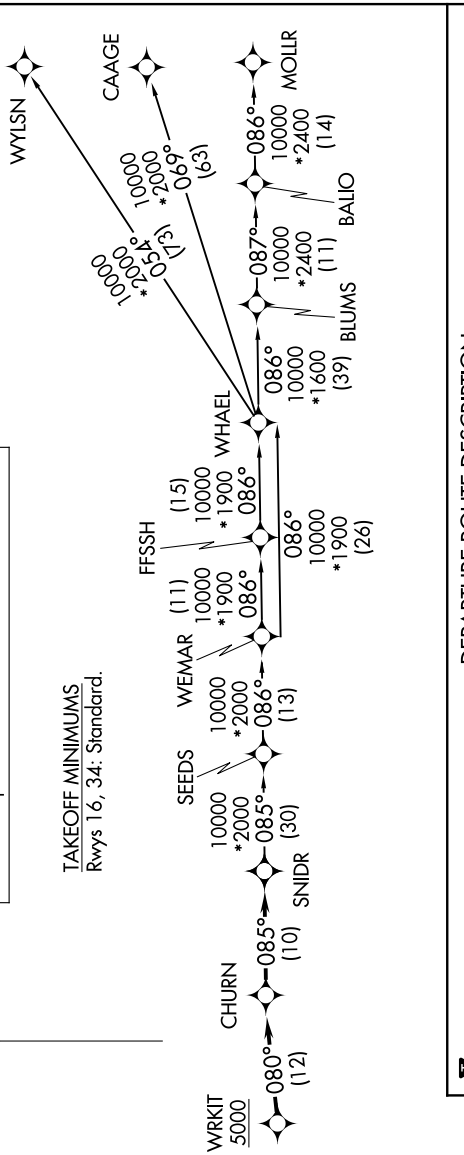

SAN ANTONIO DEP CON
125.7 290.225
CLNC DEL
121.375

DEPARTURE ROUTE DESCRIPTION

TAKEOFF RUNWAY 16: Climb on heading 157° or as assigned by ATC, for vectors to WRKIT, thence. . .
TAKEOFF RUNWAY 34: Climb on heading 337° or as assigned by ATC, for vectors to WRKIT, thence. . .

. . .on track 080° to CHURN, then on track 085° to SNIDR. Expect filed altitude 10 minutes after departure.

BLUMS TRANSITION (SNIDR2.BLUMS)
CAAGE TRANSITION (SNIDR2.CAAGE)
FFSSH TRANSITION (SNIDR2.FFSSH)
MOLLR TRANSITION (SNIDR2.MOLLR)
SEEDS TRANSITION (SNIDR2.SEEDS)
WEMAR TRANSITION (SNIDR2.WEMAR)
WHAEL TRANSITION (SNIDR2.WHAEL)
WYLSN TRANSITION (SNIDR2.WYLSN)

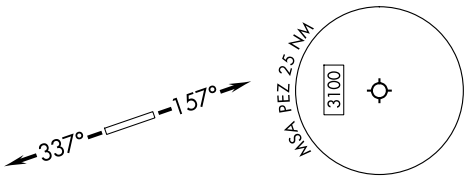

NOTE: Chart not to scale.