KNIGHTS FOUR DEPARTURE

GASTONIA MUNI (AKH)
GASTONIA, NORTH CAROLINA

CHARLOTTE DEP CON
120.05 257.2
ASOS
135.725
CLNC DEL
127.2

RADAR and DME required.

TOP ALTITUDE: 3000

TAKEOFF MINIMUMS
Rwys 3, 21: Standard.

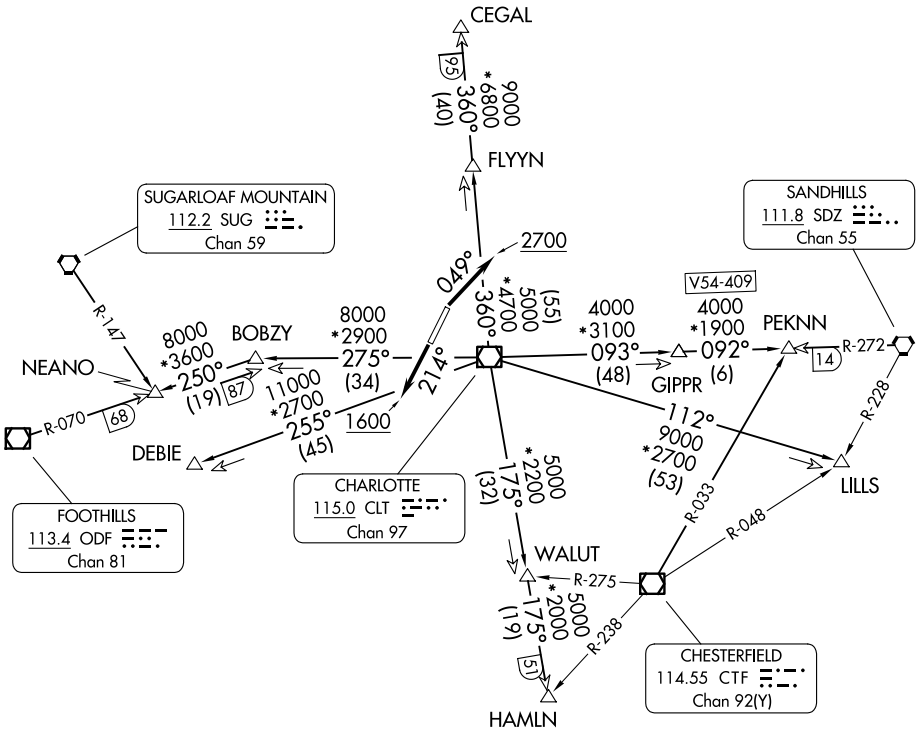

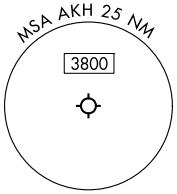

NOTE: Props only.
NOTE: Turboprops: Operate in a manner that will result in best forward speed and climb rate.
NOTE: Transponder code will be issued via Charlotte clearance delivery.

(CONTINUED ON FOLLOWING PAGE)

NOTE: Chart not to scale.

SE-2, 11 JUN 2026 to 09 JUL 2026
SE-2, 11 JUN 2026 to 09 JUL 2026