TULSA ONE DEPARTURE

TULSA DEP CON
124.0 338.3
D-ATIS
124.9 377.2
CLNC DEL
134.05 284.7
TULSA TOWER
118.7 257.8 (Rwy 18R-36L)
121.2 310.8 (Rwys 8-26, 18L-36R)

RADAR required.

TOP ALTITUDE: 15000

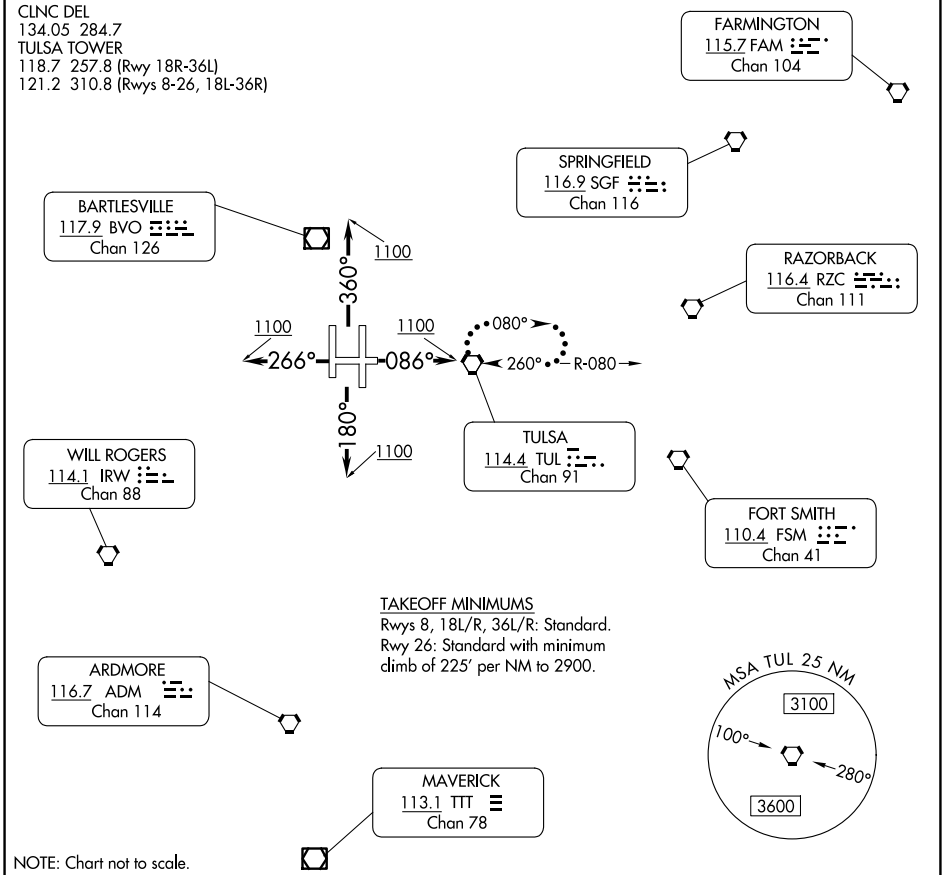

TAKEOFF MINIMUMS
Rwys 8, 18L/R, 36L/R: Standard.
Rwy 26: Standard with minimum climb of 225' per NM to 2900.

NOTE: Chart not to scale.

DEPARTURE ROUTE DESCRIPTION

TAKEOFF RUNWAYS 18L/R: Climb on heading 180° to 1100, thence. . . .
TAKEOFF RUNWAYS 36L/R: Climb on heading 360° to 1100, thence. . . .
TAKEOFF RUNWAY 8: Climb on heading 086° to 1100, thence. . . .
TAKEOFF RUNWAY 26: Climb on heading 266° to 1100, thence. . . .

. . . .continue on assigned heading for RADAR vectors to assigned route, maintain 15000 or assigned lower altitude, expect further clearance to filed altitude 10 minutes after departure.

LOST COMMUNICATIONS: Proceed to and hold east of TUL VORTAC on the 080° radial. Climb to 15000 feet or lower requested altitude, then proceed on course on filed route. Climb to requested altitude when established on course.