WAAS CH 97614 W27A	APP CRS 275°	Rwy Ldg 4502 TDZE 763 Apt Elev 763

RNAV (GPS) RWY 27
PUTNAM COUNTY (OWX)

RNP APCH.

For uncompensated Baro-VNAV systems, LNAV/VNAV NA below -16°C or above 54°C . Baro-VNAV and VDP NA when using Findlay altimeter setting. Rwy 27 helicopter visibility reduction below ¾ SM NA. When local altimeter setting not received, use Findlay altimeter setting and increase all DAs/MDAs 40 feet.

NA

MISSED APPROACH: Climb to 3000 direct WIFES and hold.

AWOS-3PT	TOLEDO APP CON	UNICOM
120.525	120.8 317.55	122.7 (CTAF) L

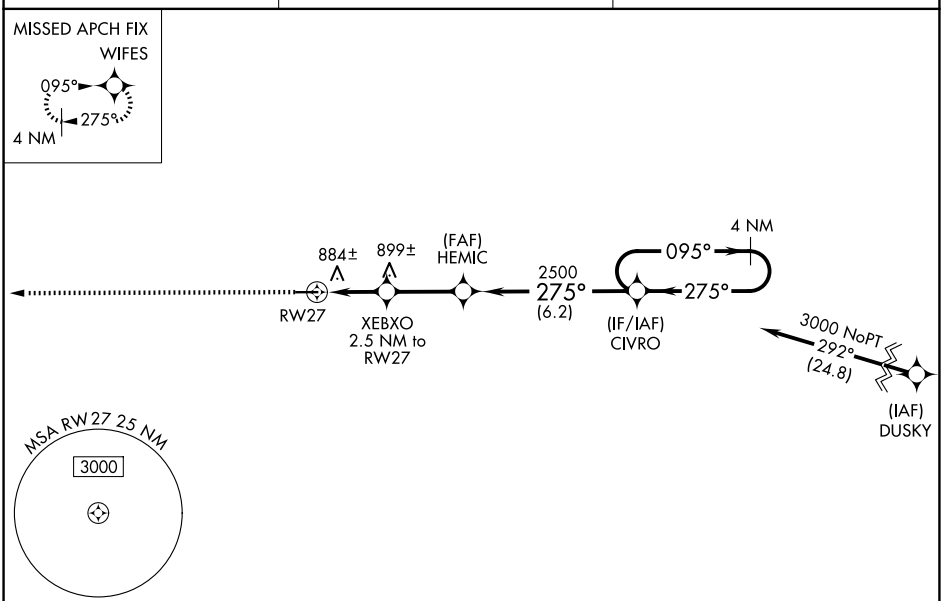

ELEV 763	TDZE 763

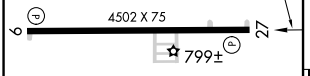

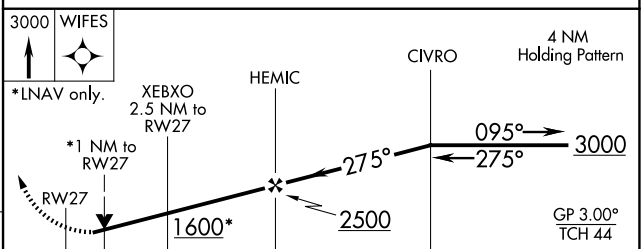

CATEGORY	A	B	C	D
LPV DA	1048-1 285 (300-1)		NA	
LNAV/VNAV DA	1185-1½ 422 (500-1½)		NA	
LNAV MDA	1140-1 377 (400-1)		NA	
CIRCLING	1200-1 437 (500-1)	1220-1 457 (500-1)	NA	

REIL Rwys 9 and 27 L
MIRL Rwy 9-27 L

EC-2, 03 SEP 2026 to 01 OCT 2026
EC-2, 03 SEP 2026 to 01 OCT 2026