Federal Aviation Administration

Memorandum

Date: December 8, 2014

To: Minimum Vectoring Altitude/Minimum Instrument Altitude (MVA/MIA) Users

From: Greg Yamamoto, Manager
Airport & Terminal Products Group

Subject: MVA/MIA Release To Public
Disclaimer for MVA/MIA Data

1) These Minimum Vectoring Altitude/Minimum Instrument Altitude (MVA/MIA) map files are to be used as a visual reference; they are not to be used as a navigational tool.

2) MVA/MIA charts are not updated on a regularly scheduled cycle. Any person using these files is responsible for checking currency dates on these individual MVA/MIA map files.

3) The FAA, Aeronautical Navigation Products/Aeronautical Information Management (AJV-2/3) certifies the MVA/MIA file data loaded on this web site. Once the files are retrieved, if they are modified, the certification of these map files are no longer valid.

4) Air Traffic facilities are responsible for the biennial review of the MVAs/MIAs.

5) MVA/MIA discrepancies should be reported to the responsible Air Traffic facility in question.

SDAT MVA PROJECT NAME:

ZSU_SSR7_MVA_2018

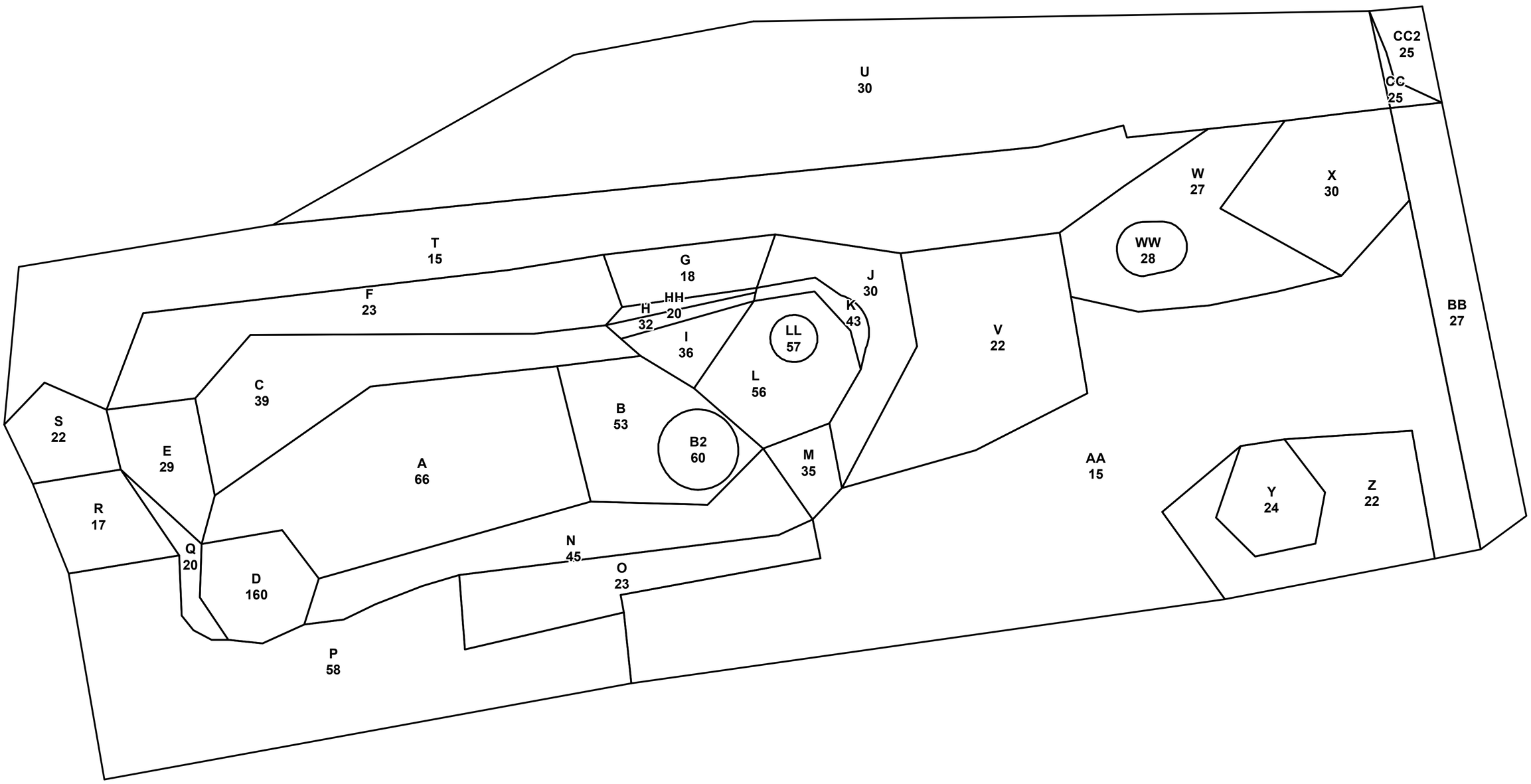

NOT FOR NAVIGATION

Plot Generated by
Air Traffic Support Team
Federal Aviation Administration