U.S. Department of Transportation
Federal Aviation Administration

General Aviation Airworthiness Alerts

AC No. 43-16

ALERTS

ALERT NO. 222
JANUARY 1997

Improve Reliability-Interchange Service Experience

CONTENTS

AIRPLANES

BEECH 1
CESSNA 4
GENERAL AVIA COSTRUZIONI 9
PIPER 9
SABRELINER 12
STINSON 12

HELICOPTERS

BELL 13
MCDONNELL DOUGLAS 14

AMATEUR, EXPERIMENTAL, AND SPORT AIRCRAFT

EDGE 15

HOT AIR BALLOONS

HEAD 15

PROPELLERS AND POWERPLANTS

TELEDYNE CONTINENTAL 15

ACCESSORIES

DEFECTIVE AVIATION HOSES 16

AIR NOTES

ALERTS ON LINE 16
A TRIBUTE TO THE FORGOTTEN MECHANIC 18
FAA FORM 8010-4, MALFUNCTION OR DEFECT REPORT 19
SUBSCRIPTION REQUEST FORM 19

Contents of this publication are informational only. Due to the need for extensive distribution of this publication, only one copy is provided to an addressee; however, this publication may be duplicated.

U.S. DEPARTMENT OF TRANSPORTATION
FEDERAL AVIATION ADMINISTRATION
WASHINGTON, DC 20590

GENERAL AVIATION AIRWORTHINESS ALERTS

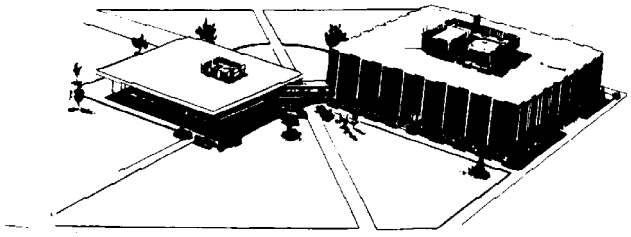

FLIGHT STANDARDS SERVICE
Mike Monroney Aeronautical Center

The General Aviation Airworthiness Alerts provide a common communication channel through which the aviation community can economically interchange service experience and thereby cooperate in the improvement of aeronautical product durability, reliability, and safety. This publication is prepared from information submitted by those of you who operate and maintain civil aeronautical products. The contents include items that have been reported as significant, but which have not been evaluated fully by the time the material went to press. As additional facts such as cause and corrective action are identified, the data will be published in subsequent issues of the Alerts. This procedure gives Alerts' readers prompt notice of conditions reported via Malfunction or Defect Reports. Your comments and suggestions for improvement are always welcome. Send to: FAA; ATTN: Maintenance Support Branch (AFS-640); P.O. Box 25082; Oklahoma City, OK 73125-5029.

AIRPLANES

BEECH

Beech Model C23 Sundowner

Flight Control Cable Damage 2730

The stabilator control cable was found with broken strands during a scheduled inspection.

The stabilator "down" cable (P/N NAS 314-25-1411) was frayed with many broken strands at the forward pulley located just aft of the firewall and under the control column. (Refer to the following illustration.) The most likely cause of this defect was age and a high number of cycles. This area deserves close attention during scheduled inspections and maintenance.

Part total time-5,572 hours.

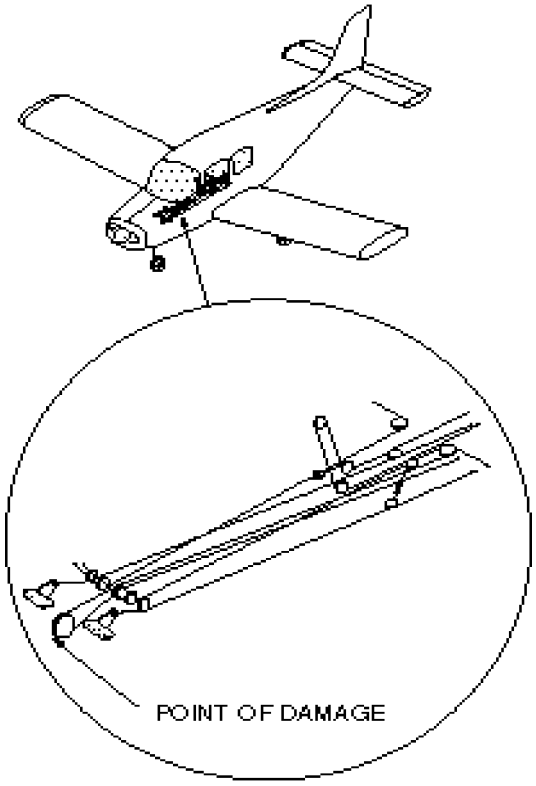

Beech Model 35 Bonanza — **Main Landing Gear Failure 3213**

Maintenance technicians heard a loud explosive-like noise while working on the parking ramp. The noise appeared to come from an aircraft parked nearby.

An investigation disclosed the left main landing gear strut was bottomed out, and there was a large hole in the top of the wing. It was later determined the landing gear strut snapring (P/N NAS 50-200) became disengaged from the groove. This allowed the strut end plug (P/N 45-815224) to be propelled from the top of the strut with great force, penetrating the upper wing surface. During discussions with the manufacturer, it was learned there are three possible causes for this type of failure.

1. A snapring with the wrong part number was used.
2. The snapring was installed upside down (i.e. with the "beveled side" up).
3. During installation, the snapring was distorted.

It was fortunate that this happened while the aircraft was parked on the ramp since in the retracted position the top of the strut is 2 inches from, and aimed directly toward, the auxiliary fuel tank.

Estimated part total time-3,187 hours.

Beech Model A36 Bonanza — **Nose Landing Gear Failure 3230**

After a normal landing, the nose landing gear collapsed while the aircraft was being slowed.

The aft nose landing gear retraction rod (P/N 36-820011-3) was found broken during an investigation. The retraction rod broke approximately 1 inch into the threaded portion. This is the point where the rod-end threads terminated. The cause of this failure was not given by the submitter. It would be wise to check this area very closely during scheduled inspections and maintenance.

Part total time-5,341 hours.

Beech Model 58P — **Vacuum System Failure 3700**

The pilot stated the vacuum system pressure went to zero during flight.

An investigation disclosed the drive shaft was sheared on the vacuum pumps. Both pumps and their filters were replaced. The submitter speculated that one of the pumps had been inoperative for some time; therefore, the system demand was placed on the remaining pump. The vacuum pumps should be individually checked for operation during scheduled inspections.

Part total time-490 hours.

Beech Model 76 Duchess — **Nose Landing Gear Failure 3230**

When engine power was applied for takeoff, during a "touch-and-go" landing, the nose landing gear collapsed.

An investigation disclosed several discrepancies which contributed to this event.

1. The left forward drag brace attachment bolt was loose.
2. The incorrect nut, cotter pin, and washers were installed.
3. The "downlock" hook pivot bolt was very stiff and almost seized which caused the hook to operate very slowly.
4. The pivot bolt and bushings between the upper and lower drag braces were severely worn at the "downlock" assembly.
5. The nose gear "downlock" switch was not properly adjusted.
6. It appeared the nose gear assembly had not been lubricated for a long time.

This accident should not have happened! It would appear the aircraft was suffering from severe neglect!

Part total time not reported.

Beech
Model C90A
King Air

Main Landing Gear
Structural Defects
3230

Cracks were found in the right main landing gear cylinder support brackets during a scheduled inspection.

The inboard cylinder support bracket (P/N 90-120060-94) and the outboard cylinder support bracket (P/N 90-120060-92) were cracked through approximately 50 percent of their length. These cracks were observed "opening wide" during a retraction test. It was evident these cracks would have progressed to the point of separation very soon. A complete inspection of this area is critical to safe operations and should be accomplished during scheduled inspections and regular maintenance.

Part total time-2,833 hours.

Beech
Model A100
King Air

Entrance Door
Support Structure
Cracks
5323

The cabin entrance door supporting structure was found cracked during a scheduled inspection.

The cabin door cable post bracket intercoastal (P/N 50-430043-1259) was found severely cracked and distorted. The submitter speculated this damage was caused by "overloading the door." This seems to be a common occurrence which results when two or more passengers, being in a rush to exit the aircraft, place their weight on the door stairs. The exit door stairs are not designed to accommodate more than one person at a time. The submitter suggested the aircraft manufacturer design a structure which will bear these excessive loads. This problem could also be averted by the flightcrew instructing the passengers on the proper entrance and exit procedures and by monitoring and assisting the passengers during this procedure. The high number of operating hours on this part may have been a significant contributing factor in this failure. This problem seems to be prevalent in all King Air Models.

Part total time-9,858 hours.

Beech
Model B200
King Air

Generator Failure
2421

Maintenance personnel were notified the right engine generator failed during flight.

An initial check of the system showed all components functioning properly. Further investigation disclosed high resistance from pin 33 on relay panel A123 to pin B at the generator control unit (GCU). The cause was found in wire number P41R16 which was routed in a bundle from the relay panel to the GCU. This wire had been stamped by a labeling machine, which made an indentation in the shielded wire, and apparently allowed arcing to occur. The conductor was eventually burned through which was revealed by the high resistance indication. The system functioned normally after wire number P41R16 was repaired.

Part total time-2,509 hours.

Beech
Model 300
King Air

Cowling Ice Vane
Door Broken
3080

A section of the left cowling ice vane door was found missing during a scheduled inspection.

The missing section of the door (P/N 101-910123-23) was approximately 4- by 8-inches. (Refer to the following illustration.) A foreign object damage (FOD) inspection of the engines first stage compressor revealed one blade edge was bent and torn. Due to this damage, the engine was removed for further inspection and repair.

An inspection of the right engine cowling ice vane door disclosed it was severely cracked in

the same location as the missing section of the left door. Also, the "ice vane aft blocker door" (P/N 101-910124-51) was found cracked on both the left and right cowlings.

The submitter recommended the manufacturer make the "bond assembly" thicker where the actuator brackets are attached.

This recommendation has been forwarded to the responsible FAA aircraft certification office for action.

Part total time-3,404 hours.

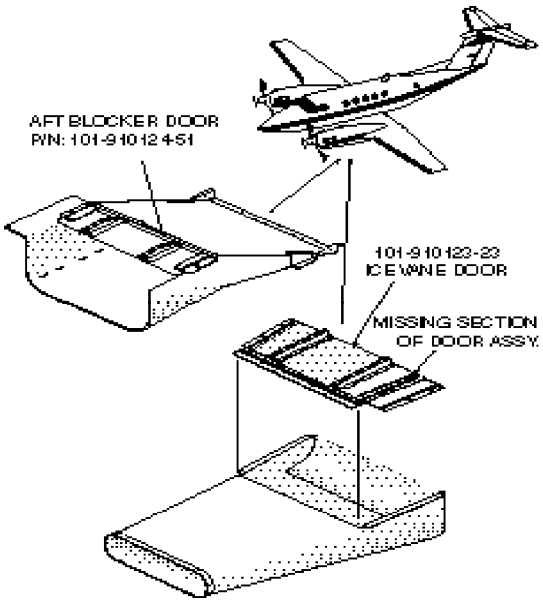

Beech Model 400A Beechjet — **Erroneous Landing Gear Indication 3260**

It was reported the left main landing gear "down" indication was intermittent during a landing approach.

The problem was traced to the "down" switch (P/N MS24331-1) mounted on the landing gear. It was found that a slight "tap" on the switch produced a proper indication in the cockpit. The submitter stated this was the third switch failure on this aircraft in the past 14 months. Another like aircraft in this operator's fleet had experienced three similar switch failures. In all cases, the landing gear rigging was checked and was within limits.

Part total time-349 hours.

CESSNA

Cessna Model 150 Commuter — **Rudder Spar Cracks 5541**

Cracks were found in the rudder spar while the aircraft was being inspected for compliance with Cessna Service Bulletin (SB) SEB 94-3.

There were three cracks located at the edge of the 1 inch hole at the top of the spar (P/N 0433010-6). In accordance with SB SEB 94-3, the rudder spar was replaced. When the replacement spar was received, the 1 inch hole had been omitted from the new part. All operators of like aircraft are encouraged to inspect this area and comply with SB SEB 94-3.

Part total time-4,153 hours.

Cessna Model 182P Skylane — **Wheel Cracks 3246**

While the tires on the right main landing gear were being changed, cracks were found at each of the three different bolt holes.

These cracks were located in the center wheel body section of the three piece wheel assembly. The submitter speculated the cause of these cracks was overtorquing the bolt, during a prior installation, combined with hard landings. It was suggested that adherence to proper wheel assembly torque values during installation might alleviate this type of damage.

Part total time-3,887 hours.

Cessna Model P210 Centurion — **Empennage Cracks 5500**

Cracks were found when the antenna, which was mounted on top of the tailcone, was removed.

A previously installed bulkhead (P/N 1212413-9) repair was discovered during evaluation of cracks in the tailcone skins (P/N's 1210504-4 and 1210504-6). This bulkhead repair and the skin doubler were also found cracked. The submitter stated this is a poor location for an antenna installation due to inadequate structural support for additional stresses imposed by the extra weight. The submitter also stated the poor quality of the previous repair may have contributed to this defect.

Aircraft total time-6,995 hours.

Cessna Model T210 Centurion — **Improper Fuel Injection Pump Operation**

After the Teledyne Continental engine (Model TSIO-520-R) and accessories were overhauled, it was reported the fuel pressure dropped when the aircraft was operated above 3,500 feet altitude. Also, it was necessary to use the fuel boost pump to maintain adequate fuel flow while climbing above 7,000 feet altitude.

All attempts at fuel pressure adjustment proved futile, and when the unmetered fuel pump pressure was increased, the engine operated in an "excessively rich" condition. After 100 hours of operation and troubleshooting, the fuel injector pump (P/N 642650-1) was removed and sent to a shop for a bench test and inspection. Only minor discrepancies were found, and the pump was returned as "serviceable." The fuel injector pump was reinstalled, and the operational flight test disclosed the problem had not been solved. After another 50 hours of operation and troubleshooting this problem, the fuel injection pump was again removed and sent to a different shop for analysis. The new shop found the fuel pump cover (P/N 643950) had been installed 180 degrees out of position. This caused upper deck pressure to the fuel pump aneroid to be blocked from the passage which pressurizes the air side of the relief valve (P/N 642644) diaphragm. (Refer to the following illustration.) At the same time, the passage in the pump cover allowed the air side of the diaphragm to be exposed only to atmospheric pressure. Decreasing the atmospheric pressure, as the aircraft ascended on the air side of the diaphragm, could not compensate for turbocharger boost and resulted in a "self-leaning" fuel mixture to the engine.

Although this problem was caused by the person assembling the fuel pump having his head in the "up-and-locked" position, some safeguard should be incorporated to make this assembly a bit more "Murphy Proof." (Our apologies to all the Murphy's of the world. No offense intended.)

Part time since overhaul-150 hours.

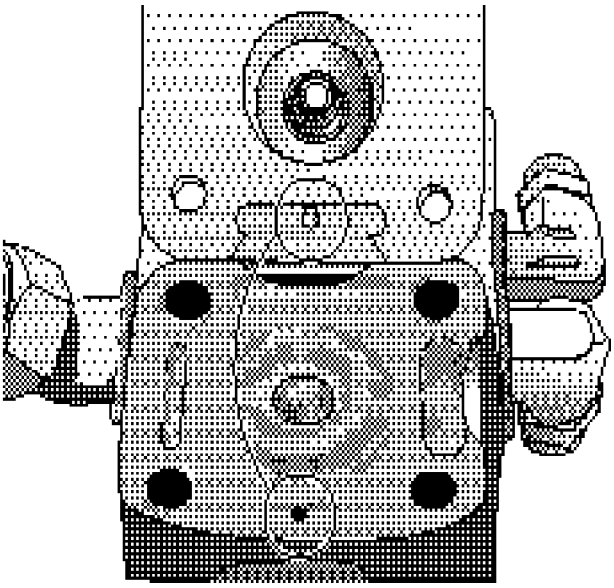

Cessna Model 310

Pilots Seat Adjustment Fitting Failure 2510

Information for this article was submitted by the FAA's Aircraft Certification Office (ACE-118) located in Wichita, Kansas.

A Cessna 310R aircraft crashed due to failure of the pilot's seat adjustment fitting. (Refer to the following illustration.)

The manufacturer has issued Service Bulletin MEB 89-6, Revision 1, dated October 12, 1990, which adds metal straps to the pilot's seat. These metal straps are intended to reduce the effects of "mechanical advantage" presented by abuse of the seat. The inspection procedures in (Number 25-10-00) the Cessna 300/400 series Continued Airworthiness Program specifically warn of the possible loss of aircraft control due to failure of the adjustment fittings (P/N's 0812735-3 and -4). All operators of these aircraft are encouraged to comply with the instructions in Service Bulletin MEB 89-6 as soon as possible.

Part total time not reported.

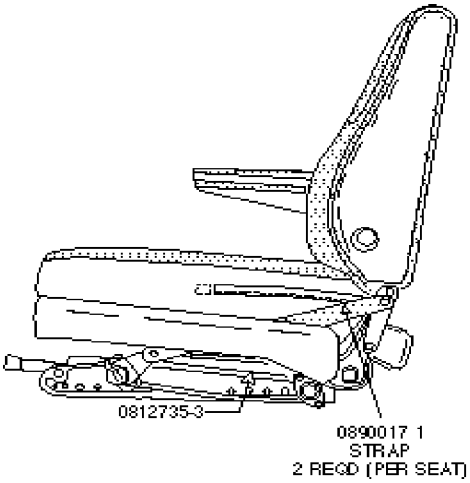

Cessna Model 310Q

Landing Gear Torque Tube Failure 3230

The aircraft seemed to be "slower and yawing to the left" during flight. A ground observer notified the pilot that the left main landing gear was extended and the other two were retracted. The landing gear was selected to the "down" position, and a safe landing was made.

During an investigation, the left main landing gear torque tube (P/N 5045010-19) was cracked at the bolt boss on the fork. This crack had progressed in a spiral direction. (Refer to the following illustration.) The rod-end attachment to the torque tube was also damaged, and the damage was confirmed by a dye-penetrant inspection. Also, the right main landing gear was found cracked at the same location as confirmed by dye-penetrant inspection. When new parts were ordered from the manufacturer (Cessna Service Kit SK414-8E), the torque tube was noticed to incorporate a gusset at the fork bolt hole, and a larger diameter bolt was used. The submitter speculated this defect was caused by the high number of landing gear cycles and possibly extending the landing gear at too high an airspeed.

Estimated part total time-5,000 hours.

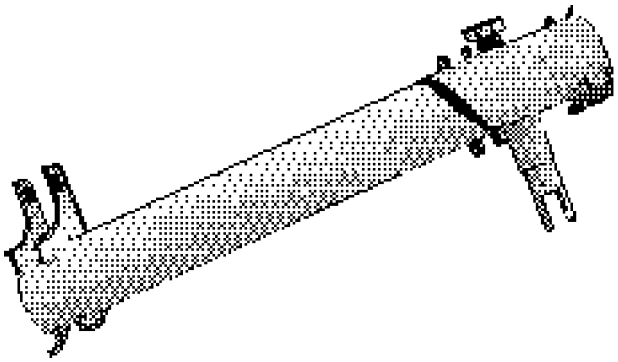

Cessna Model 310Q

Landing Gear Door Failure 5280

Just after takeoff, personnel in the control tower informed the pilot that the left main landing gear inboard door came open after the gear was retracted. A safe landing was made, and maintenance personnel were summoned.

The landing gear idler bellcrank (P/N 0841106-5) was found broken during an inspection. The bellcrank failed approximately 2 inches from the end of the arm which operates the gear door extend/retraction linkage. (Refer to the following illustration.) The failure point on the bellcrank revealed evidence of a previous crack which extended through approximately one-third of its thickness. It was suspected that improper landing gear rigging and excessive "door tension," with the gear down, contributed to and/or caused this failure.

Part total time-6,423 hours.

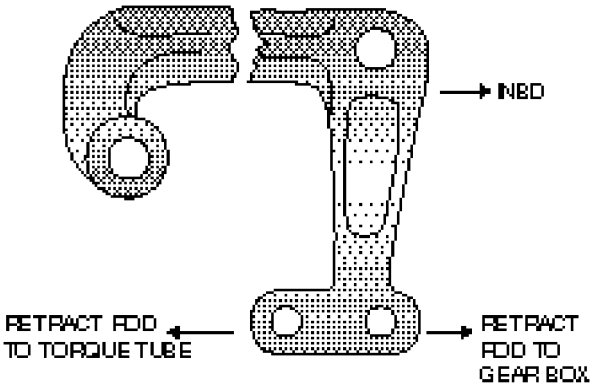

Cessna Models 401, 401A, 401B, 402, 402A, and 402B

Special Airworthiness Information Bulletin (SAIB) 7800

The following article was submitted for publication by the FAA's Aircraft Certification Office (ACE-112) located in Wichita, Kansas. This article contains the text of Special Airworthiness Information Bulletin (SAIB) ACE-96-1. (Except for minor editorial changes, this article is published exactly as it was received.)

The purpose of the SAIB is to advise operators of the aircraft models listed above that the Federal Aviation Administration (FAA) is strongly advising accomplishing the provisions of Cessna Service Letter ME72-4.

As part of the Aging Commuter Airplane Program, the FAA has reviewed a number of existing Airworthiness Directives (AD's) on airplanes commonly used in scheduled service. The purpose of the review was to identify cases where critical repetitive inspections could be eliminated by mandating installation of improved parts that do not require such inspections. These "terminating actions" are accomplished by issuance of a superseding AD.

Specifically, an AD superseding AD 70-03-04, Revision 1, was contemplated. This would have required the installation of steel turbocharger heat shields in place of the turbocharger insulation blankets originally installed on these airplanes. Currently, AD 70-03-04, Revision 1, requires repetitive inspections of the existing turbocharger insulation blankets and acknowledges the installation of the steel turbocharger heat shield as terminating action for the inspection; but does not mandate installation of the steel turbocharger heat shield.

While investigating the feasibility of superseding AD 70-03-04, Revision 1, to mandate installation of the steel turbocharger heat shield, Cessna informed the FAA that parts to accomplish the proposed terminating action were not available and that the tooling required to fabricate the parts was no longer in existence. It was not deemed feasible to mandate AD action which would require parts which were not available from the manufacturer. Therefore, it was decided to issue this SAIB. The FAA notes that

compliance with the repetitive inspections mandated by AD 70-03-04, Revision 1, continues to assure safety; but, recognizes the improvement in safety provided by the elimination of critical repetitive inspections.

Based on the number of spares sales, it is reasonable to conclude that most of the affected airplanes have already installed the steel turbocharger heat shields, and that there will not be a substantial impact on the fleet.

RECOMMENDATION:

As soon as practical, comply with the provisions of Cessna Service Letter ME72-4. Complying with this Service Letter is terminating action for AD 70-03-04, Revision 1. The FAA realizes that parts are not available from the manufacturer and suggests that utilizing serviceable salvage parts is an acceptable alternative to new parts for this application. The FAA strongly recommends that any airplanes not incorporating the provisions of Cessna Service Letter ME72-4 be modified as soon as practical.

Cessna Model 402B Businessliner — **Nose Landing Gear Damage 3230**

During a cross-country preflight inspection, the pilot discovered the nose landing gear fork bolt (P/N 5045211-2) was broken.

The fork bolt was broken at the junction of the threads and the shank. (Refer to the following illustration.) Also, the assembly began to pull away from the bellcrank (P/N 0842104-3). The location of this assembly makes inspection very difficult; however, it is worth the extra effort to avert a possible nose landing gear failure. Due to the excessively high number of operating hours, metal fatigue is the suspected cause of this defect.

Part total time-10,509 hours.

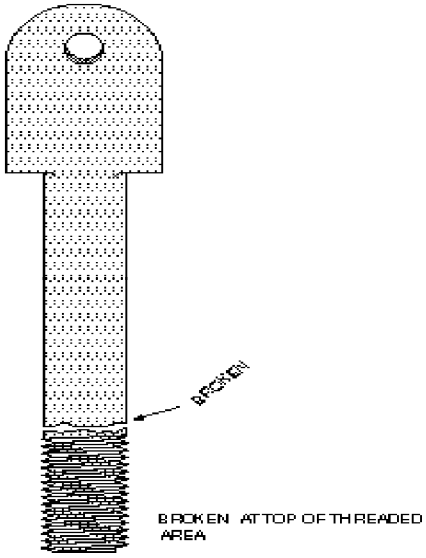

Cessna Model 441 Conquest — **Deice Boot Malfunction 3010**

The pilot activated the wing deice system, and the left wing boots inflated; however, they would not deflate until the engine was secured after landing.

An inspection of the system disclosed the left flow control injector valve (P/N 302353-06) overboard port was obstructed. The port was plugged with “mud and the egg sacks of an insect.” Insects, rodents, birds, and other creatures have caused many aviation problems in the past. This is a longstanding problem, and the only solution is to completely seal the aircraft in some sort of plastic material when it is not in use. This, of course, is not practical and leaves only a thorough inspection prior to flight to discover these types of problems before they cause a hazardous situation. Since most insect infestations are seasonal, extra caution should be used during these times. All inspections should include areas of the aircraft which might harbor creatures, their remains, or other material they may deposit.

Part total time-2,894 hours.

GENERAL AVIA COSTRUZIONI

General Avia Costruzioni
Model F22B

Broken Engine Mount
5346

The student pilot found an engine mount cracked during a preflight inspection.

The crack was located above the nose landing gear strut. When the left side of the engine cowling was opened, another crack was found below the left lower engine mount cluster weld. The submitter recommended the manufacturer construct the engine mount from heavier material. Frequent inspections of this area should be accomplished.

Part total time-347 hours.

PIPER

Piper
Model PA 23-250
Aztec

Fuel Crossfeed Valve Failure
2823

The aircraft owner reported a strong fuel odor in the cockpit.

An inspection of the fuel system disclosed the fuel crossfeed valve (P/N 492-052) brass reducer fitting was cracked. (Refer to the following illustration.) This fitting had not been disturbed for the past 6 years when it suddenly failed. With the fuel boost pump on, the crack sprayed and atomized fuel in a 2-inch fan pattern. The fuel then dripped down on the strobe light power supply creating a very hazardous condition. Since the brass fitting was no longer available from the manufacturer, it was necessary to replace the complete crossfeed valve.

Part total time-5,214 hours.

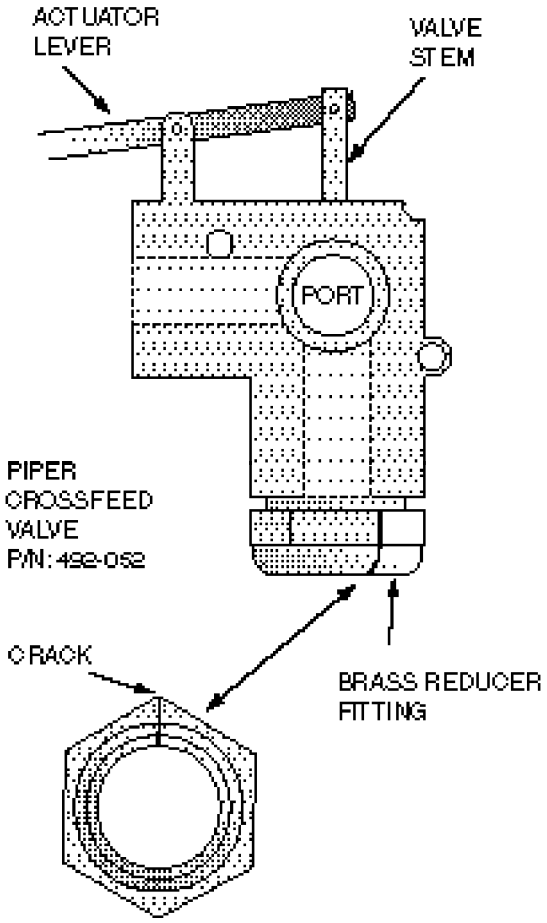

Piper
Model PA 28-180
Cherokee

Fuel Vent And Supply Hose Deterioration
2820

The owner recently acquired this aircraft and removed the fuel tanks for inspection.

The fuel vent and supply hoses were found severely deteriorated. The date stamped on each of the hoses indicated they were installed

as original equipment in 1967. The hoses were very hard and broke under the slightest flexing pressure. Both wing spars were severely corroded in the area of the upper outboard fuel tank. The spar material was delaminated for "several inches." A proper examination of this area during scheduled inspections would surely have eliminated this condition and prevented a hazardous situation.

Part total time-2,200 hours.

Piper	**Low Engine Power**
Model PA 28R-200	**Production**
Arrow	**7160**

During a preflight engine operational test, engine power could not be advanced beyond 1,900 RPM.

The alternate air door was found lodged in the fuel metering unit during an investigation. The door hinge pin (P/N 23809-006) had worn completely through the attachment door, which allowed the door to migrate into the fuel metering unit. This hinge pin had been installed approximately 1 year prior to this occurrence. The aircraft was used in a flight school environment; however, the alternate air door hinge pin should not have failed in this amount of time. The submitter recommended the manufacturer install a tab on the alternate air door which would provide for a "push-pull" test of the hinge. Attaching a "leash" from the door to the airframe to prevent ingestion was also suggested.

Part total time-600 hours.

Piper	**Cracked Wing Ribs**
Model PA 28R-200	**5712**
Arrow	

During a scheduled inspection, wing ribs were found cracked in the wing walk area of the right wing.

Three ribs were cracked at the outboard edge. The submitter suspected the damage was caused by high operating time and possibly the stress which was induced when ribs were formed. It was stated: "This seems to be a common occurrence on this make and model of aircraft with over 4,000 hours." This area deserves close attention during inspections and maintenance.

Part total time-4,900 hours.

Piper	**Foreign Object**
Model PA 31-325	**Damage (FOD)**
Navajo	**2140**

The pilot reported that when the defroster was started, grass and other debris blew out of the vents.

An inspection disclosed a bird's nest had been built in the heater, and grass was found in the heater inlet, the blower fan, and inside the heater around the burner can. The submitter suggested the manufacturer authorize the installation of an inlet screen on the heater. A thorough preflight inspection could have detected this FOD prior to starting the defroster.

Part total time not reported.

Piper	**Rudder Control**
Model PA 32-260	**Failure**
Cherokee Six	**2721**

The pilot reported experiencing excessive right rudder application with very little control response during flight.

An inspection revealed the rudder control bar assembly (P/N 63420-02) was severely cracked at the left weld area of the cross-over bar. The submitter speculated this defect was caused by exceeding the towing limits ground positioning of the aircraft. Also, a lack of lubrication between the rotating bars may have been a contributing factor. Periodic lubrication, inspection of the weld areas, and adherence to the towing limits were suggested to avert recurrence of this defect.

Part total time-4,061 hours.

Piper
Model PA 34-200T
Seneca

Nose Landing Gear
Steering Shaft
Failure
3250

The nose landing gear center shaft of the centering spring assembly (P/N 96522-00) was found sheared during a scheduled inspection.

The shaft failed at the rod-end attachment threaded area. (Refer to the following illustration.) A visual inspection of the broken shaft indicated it had been partially cracked in a vertical direction for some time prior to complete failure. It was suspected this damage was caused by exceeding the turning limits (while towing the aircraft). Frequent inspection of this area and adherence to the specified turning limits while towing were recommended.

Part total time not reported.

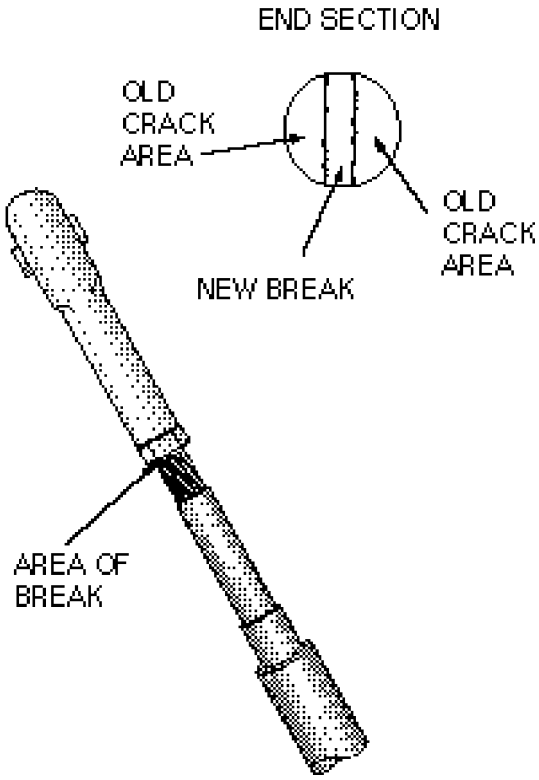

Piper
Model PA 38-112
Tomahawk

Broken Flight
Control Pulley
Brackets
2700

Excessive play was found in the elevator control system during an annual inspection.

An investigation disclosed that both “gang pulley brackets” (P/N’s 77844-02 and 77844-03) were broken. The brackets, located at Fuselage Station 134, were used to accommodate five sets of flight control pulleys. The brackets were broken at the point where the center bolt passed through one bracket, then through the five pulleys, and then through the other bracket. The submitter did not offer a cause for this defect. Considering the high number of operating hours, it seems likely that metal fatigue may have been an important factor in this failure. This area should be checked by dye-penetrant inspection methods during all scheduled inspections.

Part total time-10,617 hours.

Piper
Model PA 42-720
Cheyenne

Broken Engine
Mount Bolt
5346

The left engine upper outboard engine mount retention bolt (P/N 553-344) was found broken during a scheduled inspection. These bolts are used to attach the engine mount to the firewall.

The manufacturer has established a life limit for these bolts of 7,500 hours of operation. The set of engine mount retention bolts installed on this aircraft had accumulated 5,338 hours of operation. After finding this bolt broken, a decision was made to replace all of the engine mount retention bolts. The bolts were removed and sent to a metallurgical laboratory for fracture analysis. The laboratory report stated the crack, which resulted in a complete fracture, was the result of stress corrosion cracking (hydrogen embrittlement). The report also noted the clamping load had been reduced, and the bolt torque was equal to or less than the clamping friction force (it should always be greater in a properly clamped

structure). The submitter suggested these bolts be replaced during each engine change along with the application of corrosion preventive compound. Also, it was suggested the running friction torque of the bolt be added to the specified torque value to ensure proper clamping force; however, this should not be done until the manufacturer revises the technical data to include this process. These suggestions, along with this report, have been sent to the responsible FAA aircraft certification office for action.

Part total time as previously stated.

Piper Model PA 44-180 Seminole — **Fuselage Nose Section Spar Cracks 5313**

Both of the nose cone spars were found damaged during a 100-hour inspection.

The spars (P/N's 86444-800 and 86444-802) had cracks in the "L-angle" reinforcement. This reinforcement is used to attach the nose landing gear drag link mounting bracket to the fuselage. The cracks were located at the lower aft bolt hole for this mounting bracket. The cracks ran lengthwise and extended past the bolt holes approximately 1 inch in each direction. The submitter stated this was the second like aircraft found with this defect. The location of this area makes inspection very difficult; however, the submitter suggested every effort be made to conduct a proper inspection.

Part total time-5,900 hours.

SABRELINER

Sabreliner Models 265-40, -60, and -65 — **Suspect Windows 5620**

Information for this article was furnished by Mr. Richard Brooks of the FAA Manufacturing Inspection District Office (ACE-180) located in Kansas City, Missouri.

It has been reported that in some instances, windows on these aircraft have been replaced with "military surplus windows (inner, outer)" released by the Department of Defense.

Windows (P/N's 265-318207-002 inner and 265-318205-012) for the right assembly (P/N 265-318002-902), and (P/N's 265-31207-001 inner and 265-318205-011 outer) for the left assembly (P/N 265-318002-901) are used on these models. Repair stations may be replacing the individual inner and outer window panels without using the proper fixture and assembly procedures. The airframe which holds the window assembly is not adequate to be used as a holding fixture during assembly of the window panels. The proper fixture and procedure should be used to prevent cracking of the window panels. The manufacturer has not made this equipment or procedure available and sells each unit as an assembly. It is recommended that these windows be replaced as assemblies using the assembly part numbers previously given.

Part total time not applicable.

STINSON

Stinson Model 108-3 Voyager — **Wing Spar Corrosion 5711**

The left wingtip was damaged during a sudden windstorm. While repairing this damage, the wingtip bow was removed, revealing severe corrosion on both spars (P/N's 1112146-0 and 1112147-0).

While in search of "hidden damage," the left wing fuel tank was removed, and even more severe intergranular corrosion was detected. The left wing forward spar had been penetrated by the corrosion just outboard of the lower fuselage attachment lug. The corrosion hole was approximately 2 inches in diameter. After removal of part of the wing skin, a section of the spar (approximately 2 feet long) was found severely corroded. It had progressed to the point of almost complete disintegration of the spar center section at the drag brace wire attachment point. At the time of this report, the submitter had made only a cursory inspection of the right wing.

The results of that inspection were similar, but less severe. The submitter speculated the cause of this corrosion was age and the presence of a "large bird's nest" in the left wing. This aircraft was manufactured in 1948.

Part total time-2,578 hours.

HELICOPTERS

BELL

Bell Model 206BIII Jet Ranger — **Tail Rotor Yoke Crack 6400**

During a daily cleaning of the helicopter, the pilot noticed what appeared to be a crack in the tail rotor yoke (P/N 206-011-811-009).

After removing the paint from the suspect area, a crack was confirmed visually by using a magnifying glass. It appeared the crack originated at the center line of the yoke outboard bolt hole and extended to the outer end of the yoke. The crack had begun to travel to the other side of the yoke. Any abnormality of the paint in this area should be thoroughly investigated.

Part total time since overhaul-1,233 hours.

Bell Model 206L1 Long Ranger — **Skid Tube Cracks 3270**

A skid tube was found cracked during a scheduled inspection. This finding prompted an inspection of the skid tube (P/N 206-324-003) on the opposite side, where severe corrosion damage was discovered. (No cracks were found on this skid tube.)

Both of the skid tubes had been installed 27 months prior to this discovery. The cracks appeared to originate at the steel inserts. (Refer to the following illustration.) It was speculated that improper installation or hole preparation for the inserts may have induced stress which caused the cracks. These skid tubes had been installed under a Supplemental Type Certificate (STC) and were manufactured under a Parts Manufacturing Approval (PMA). Both skid tubes were primed, painted, and ready for installation when received, and this included installation of the skid shoes.

Part total time-2,734 hours.

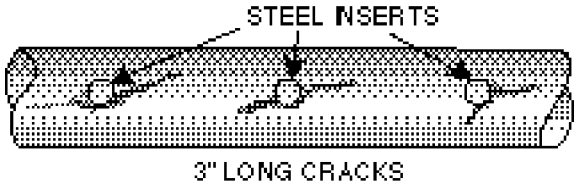

Bell Models As Given Below — **Updated Tail Rotor Feathering Bearing 6400**

The following article was submitted by the FAA's Rotorcraft Certification Office (ASW-170) located in Fort Worth, Texas.

> Bell Helicopter Textron has issued Technical Bulletin Number (TB) 206L-94-172, dated December 19, 1994. This TB introduces an improved tail rotor blade feathering bearing (P/N 206-310-105-101) to replace the old feathering bearing (P/N 206-010-765-001). The aircraft models and serial numbers affected are as follows:
>
> 206L, S/N 45004 through 45153, and 46601 through 46617
>
> 206L-1, S/N 45154 through 45790
>
> 206L-3, S/N 51001 through 51612
>
> 206L-4, S/N 52001 through 52104
>
> Model 206L-4, S/N 52105 and subsequent will have tail rotor blades (P/N 206-016-201-131) and yoke

(P/N 206-011-819-109) installed prior to delivery.

Tail rotor blade (P/N 206-016-201-131) incorporates feathering bearing (P/N 206-310-105-101). Tail rotor blade (P/N 206-016-201-131) is the spare replacement for tail rotor blade (P/N 206-016-201-127).

Part (I) of this TB provides modification instructions to retrofit bearing (P/N 206-310-105-101) to existing tail rotor blades (P/N's 206-016-201-001, -107, -113, and -127).

Feathering bearing (P/N 206-310-105-101) is reduced in cross-section and requires a new tail rotor yoke assembly (P/N 206-011-810-109) with thicker flange bushings (P/N 206-011-816-105). Tail rotor yoke (P/N 206-011-819-109) is the spare replacement for tail rotor yoke (P/N 206-011-819-105).

Part (II) of this TB provides modification instructions to retrofit bushing (P/N 206-011-816-105) to existing tail rotor yoke (P/N's 206-011-819-101 and -105).

Part (III) of this TB provides configuration and installation instructions for a new or modified tail rotor blade assembly and new or modified tail rotor yoke assembly.

For more specific information consult the TB or the manufacturer.

MCDONNELL DOUGLAS

McDonnell Douglas Model 369D — **Defective Main Rotor Transmission Drain Plug 6330**

The main rotor transmission drain plug was found cracked during overhaul.

The plug (P/N B3148A) was cracked in the radius at the junction of the head and the plug barrel. (Refer to the following illustration.) The crack traveled around the entire circumference; however, it had not penetrated the wall thickness of the plug barrel. The submitter did not offer a cause for this defect; however, it seems likely that excessive torque may have been a factor.

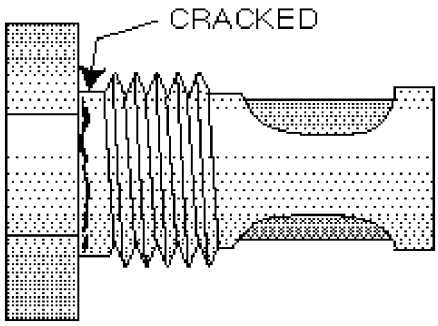

McDonnell Douglas Model 369D — **Tail Rotor Pinion Shaft Damage 6400**

The main rotor transmission and the tail rotor output pinion shaft were found damaged during an overhaul and inspection.

It was determined the damage had been caused by a broken bearing race. The output pinion shaft (P/N 369025125-13) was severely gouged at the bearing land and retaining ring lip. (Refer to the following illustration.) The shaft was replaced due to gouges and nicks. This area should be closely checked at every opportunity.

Part total time-778 hours.

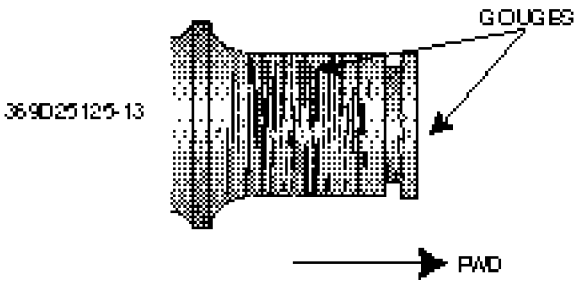

AMATEUR, EXPERIMENTAL, AND SPORT AIRCRAFT

EDGE

Edge
Model 540
(Poe G.L., S.Y.)
Engine Textron Lycoming
Model IO 540

Ignition Harness
Defect
7400

Although this problem occurred on an experimental aerobatic aircraft, it could also occur on any aircraft using this engine/ignition harness combination.

The ignition harness spark plug nut was found seized to the drive ferrule making removal from the spark plug impossible. It appeared the spark plug nut was too heavily "plated." This resulted in "galling" of the nut and the drive ferrule during installation. The "plating" also formed slivers of metal which were found in the spark plug ceramic. This drive ferrule was coated with "antiseize compound," and operation returned to normal.

Part total time-130 hours.

HOT AIR BALLOONS

HEAD

Head
Model AX8-88

Suspension Cable
Serving Defect
5102

The serving around the Kevlar suspension cable was found loose during a scheduled inspection.

The Kevlar suspension cable is sewn together and further secured by a serving (nylon cord wrap). The serving is used to maintain an "eye" at the base of the cable. (Refer to the following illustration.) The submitter stated: "This part was unairworthy."

The manufacturer's maintenance manual does not include a repair for this defect.

Part total time-105 hours.

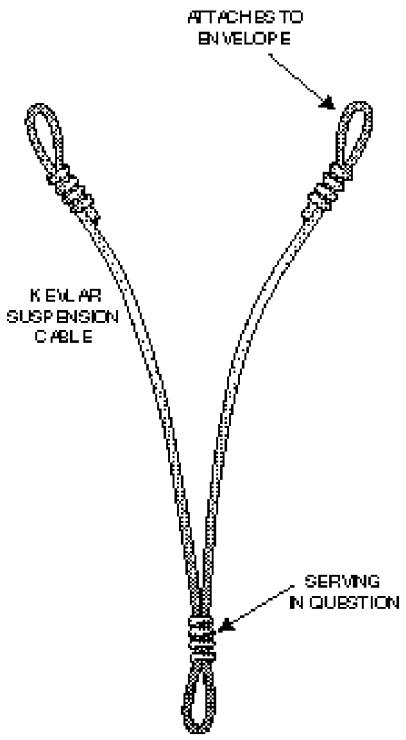

PROPELLERS AND POWERPLANTS

TELEDYNE CONTINENTAL

Teledyne Continental
Model 421B
Golden Eagle

Defective Fuel
Injector
7313

Fuel stains were noticed on the Number 3 cylinder while accomplishing a repair inside the right engine cowling.

The fuel stains were adjacent to the threaded portion of the fuel injector. The injector (P/N 633723D19A) broke at the threads when

it was being removed. Further inspection revealed the orifice in the outlet end of the injector was drilled “off center.” (Refer to the following illustration.) Failure to have an injector in this area would allow raw fuel to be expelled and present a potentially hazardous condition. The submitter suggested that injectors be closely inspected for this condition at every opportunity.

Part time since overhaul-846 hours.

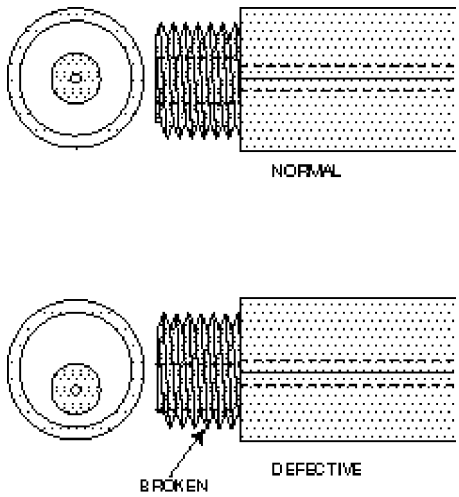

ACCESSORIES

DEFECTIVE AVIATION HOSES

The following article was submitted by the FAA Aircraft Certification Office (ACE-118) located in Wichita, Kansas. (Except for minor editorial changes, this article is published exactly as it was received.)

Defective MIL-H-6000 hose, .5 inch to 3 inches inside diameter, has been found installed in fuel and fuel vent systems.

The inner liner has delaminated and severely restricted fuel flow. The hose, manufactured by Buckeye Rubber Products, Inc., is of a spiral wrapped construction with a .375-inch wide red stripe and the number 94519 may be visible. (Refer to the following illustration.) Defective hoses have been found with the following quarterly manufacturing date markings: 2Q94, 1Q95, 2Q95, and 3Q95. Also, hoses with other manufacturing date markings may be suspect.

All maintenance technicians should be alert for the presence of these hoses, either installed on an aircraft or new from a parts distributor.

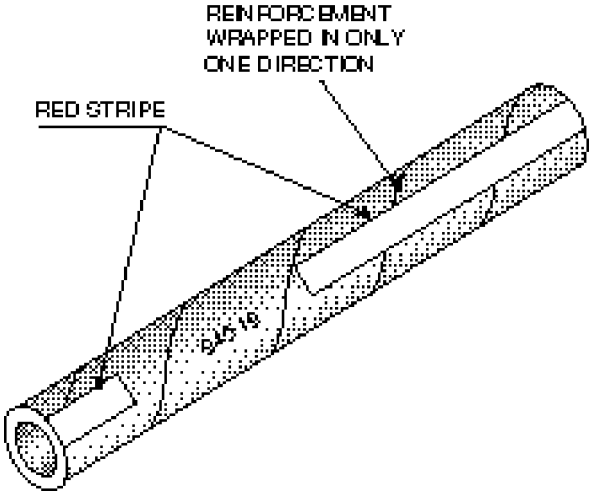

AIR NOTES

ALERTS ON LINE

We have received several requests to make the information contained in AC 43-16, General Aviation Airworthiness Alerts, available electronically. Therefore, this publication is now available through the FedWorld Bulletin Board System (BBS), via the Internet.

You may directly access the FedWorld BBS at telephone number (703) 321-3339. To access

this publication through the Internet, use the following address.

http://www.fedworld.gov/ftp.htm

This will open the “FedWorld File Transfer Protocol Search And Retrieve Service” screen. Page down to the heading “Federal Aviation Administration” and select “FAA-ASI”. The file names will begin with “ALT”, followed by three characters for the month, followed by two digits for the year (e.g. “ALTJUN96.TXT”). The extension “TXT” indicates the file is viewable on the screen and also available to download.

Beginning July 1996, we are using the Adobe Acrobat software program format to upload this monthly publication. This change is necessary to include the illustrations which are associated with various articles. The file names will still begin with “ALT”, followed by three characters for the month, followed by two digits for the year; however, the extension will be "PDF" (e.g. “ALTJUL96.PDF”). The extension “PDF” indicates it will be necessary to download the files for viewing. The Adobe Acrobat Viewer is available for download from the Internet (free of charge) and will allow the files to be read.

You may still access the "TXT" extension for issues of this publication prior to July 1996.

Also, available at this address are the Service Difficulty Reports which may be of interest.

The Regulatory Support Division (AFS-600) has established a "HomePage" on the Internet, through which the same information is available. The address for the AFS-600 "HomePage" is:

http://www.mmac.jccbi.gov/afs/afs600

Also, this address has a large quantity of other information available. There are “hot buttons” to take you to other locations and sites where FAA Flight Standards Service information is available. If you have any questions, our “E-mail” address follows.

Other requests have been received indicating a need to make the staff of this publication more available to our readers. To provide greater and more flexible access for you to offer information and ask questions, you may contact us by using any of the following methods.

Editor: Phil Lomax, AFS-640

Telephone Number: (405) 954-6487

FAX Number: (405) 954-4570 or
(405) 954-4748

Internet E mail address:
ga-alerts@mmacmail.jccbi.gov

Mailing Address:
FAA
ATTN: AFS-640 (Phil Lomax)
P.O. Box 25082
Oklahoma City, OK 73125-5029

We hope this will allow you to contact us by a means which will be convenient and save some of your time. We welcome the submission of aircraft maintenance information via any form or format. This publication provides an opportunity for you to inform the general aviation community of the problems you have encountered. The Service Difficulty Reporting (SDR) program also brings the problems to the attention of those who are able to resolve the problems. Your participation in the SDR program is vital so accurate maintenance information is available to the general aviation community.

A TRIBUTE TO THE FORGOTTEN MECHANIC

Through the history of world aviation many names have come to the fore.

Great deeds of the past in our memory will last, as they're joined by more and more.

When man first started his labor in his quest to conquer the sky he was designer, mechanic, and pilot, and he built a machine that would fly but somehow the order got twisted, and then in the public's eye the only man that could be seen was the man who knew how to fly.

The pilot was everyone's hero, he was brave, he was bold, he was grand, as he stood by his battered old biplane with his goggles and helmet in hand.

To be sure these pilots all earned it, to fly you have to have guts.

And they blazed their names in the hall of fame on wings with bailing wire struts.

But for each of these flying heroes there were thousands of little renown, and these were the men who worked on the planes but kept their feet on the ground.

We all know the name of Lindbergh, and we've read of his flight to fame.

But think, if you can, of his maintenance man, can you remember his name?

And think of our wartime heroes, Gabreski, Jabara, and Scott.

Can you tell me the names of their crew chiefs?

A thousand to one you cannot.

Now pilots are highly trained people, and wings are not easily won.

But without the work of the maintenance man our pilots would march with a gun.

So when you see mighty aircraft as they mark their way through the air, the "grease-stained man" with the wrench in his hand is the man who put them there.

The anonymous author of this composition must surely have had an appreciation and respect for those of us past and present who endeavor to promote aviation safety to the highest possible level. We endure the environmental extremes of the flightline and are content to allow those who are pilots to reap the glory of the public eye. We are content to remain in the background with the calm assurance that we have given our all in the pursuit of safety in aviation. We swell with pride as we watch the product of our labor rise gracefully from the runway and embrace a pristine sky.

The greatest and most valued recognition we can hope to receive comes from our peers and from within. The Aviation Awards Program has become one of the most coveted forms of recognition for maintenance personnel. This program stresses education, training, and superior performance, as well as the other attributes mentioned here, to praise those worthy of its tests. Our most valued assets are the tools of our trade, our reputation and integrity, and the respect of our customers who put their lives in our hands.

With the many technological and sociological advances in aviation over the years, many of the ideas put forth in this poem are no longer valid. "Bailing wire" for example, is very much frowned upon as wing strut and hinge pin material.

Maintenance personnel, for the most part, no longer fit the stereotype "grease-stained man," which has been distorted and propagated by the entertainment media. The "grease-stained man" with a rag hanging from his pocket, cap with a turned up bill, and a less than intelligent look on his face, is purely a fictional character created to provide contrast and further embellish the flyer. Also, not all maintenance men are men; there are many women now who have earned a position among the ranks and have made significant contributions to aviation maintenance safety.

Through the evolution of aviation maintenance, the requirements of brawn has been replaced by an ever-expanding requirement for brain power. With the complex nature of today's aeronautical products has come maintenance people who can analyze, forecast, and troubleshoot problems by use of the computer. (Usually, we do not get "grease-stained" from this activity.) The ever-changing demands of maintaining today's aircraft present a new challenge each day which is met with an eager enthusiasm to learn something new and to put things right. We approach each new challenge with pride and a confident demeanor which seems to say: "You can't break anything that I can't fix!"

FAA FORM 8010-4, MALFUNCTION OR DEFECT REPORT

For your convenience, FAA Form 8010-4, Malfunction or Defect Report, will be printed in every issue of this publication.

You may complete the form, fold, staple, and return it to the address printed on the form. (No postage is required.)

SUBSCRIPTION REQUEST FORM

For your convenience, a Subscription Request Form for AC 43-16, General Aviation Airworthiness Alerts, is printed in every issue.

If you wish to be placed on the distribution list, complete the form, and return it, in a stamped envelope, to the address shown on the form.

OMB No. 2120-0003

DEPARTMENT OF TRANSPORTATION
FEDERAL AVIATION ADMINISTRATION

MALFUNCTION OR DEFECT REPORT

OPER. Control No.	
ATA Code	
1. A/C Reg. No.	N-

Enter pertinent data	MANUFACTURER	MODEL/SERIES	SERIAL NUMBER
2. **AIRCRAFT**			
3. **POWERPLANT**			
4. **PROPELLER**			

5. SPECIFIC PART (of component) CAUSING TROUBLE

Part Name	MFG. Model or Part No.	Serial No.	Part/Defect Location.

6. APPLIANCE/COMPONENT (Assembly that includes part)

Comp/Appl Name	Manufacturer	Model or Part No.	Serial Number

Part TT	Part TSO	Part Condition	7. Date Sub.

8. Comments (Describe the malfunction or defect and the circumstances under which it occurred. State probable cause and recommendations to prevent recurrence.)

Optional Information:

Check a box below, if this report is related to an aircraft

☐ Accident; Date _____ ☐ Incident; Date _____

DISTRICT OFFICE	
OPERATOR IDENTIFIER	
OTHER	
COMMUTER	
FAA	
UPD.	
MFTWG	
USCH.	
OPER.	
REF. NTL.	
WRITTEN BY:	
TELEPHONE NUMBER:	( ) —

FAA Form 8010-4 (10-98) SUPERSEDES PREVIOUS EDITIONS

Use this space for continuation of Block 8 (*if required*).

U.S. Department
of Transportation

**Federal Aviation
Administration**

Flight Standards Service
Maintenance Support Branch
P.O. Box 25082
Oklahoma City, OK 73125

AFS-640

Official Business
Penalty for Private Use $300

NO POSTAGE
NECESSARY
IF MAILED
IN THE
UNITED STATES

BUSINESS REPLY MAIL

FIRST CLASS PERMIT NO. 12438 WASHINGTON, D.C.

Federal Aviation Administration
AFS-640 (Alerts)
P.O. Box 25082
Oklahoma City, OK 73125-5029

SUBSCRIPTION REQUEST FORM

ADVISORY CIRCULAR (AC) 43-16, GENERAL AVIATION AIRWORTHINESS ALERTS

Please use this request to subscribe to AC 43-16 or to change your address if you are presently on the mailing list. Once your name has been entered, you will continue to receive this publication until you request your name be removed or a copy is returned because of an incorrect address.

Because this mailing list is independent of other FAA mailing lists, it is necessary that you notify us when your address changes. (Our address is on the following subscription request.) If you are presently receiving this publication it is **NOT** necessary to send another subscription request. The following subscription request may be duplicated, as necessary. **TELEPHONE REQUESTS WILL ALSO BE ACCEPTED; THE TELEPHONE NUMBER IS (405) 954-6487.**

AC 43-16 SUBSCRIPTION REQUEST

If you would like to **BEGIN** receiving AC 43-16, or **CHANGE** your address, please complete the following:

PLEASE PRINT INFORMATION LEGIBLY, INCLUDE YOUR ZIP CODE, AND THE DATE OF YOUR REQUEST.

NAME:_____

ADDRESS:_____

_____

_____

ZIP CODE_____

DATE:_____

CIRCLE ONE OF THE FOLLOWING:

1. This is a **NEW** subscription.
2. This is an **ADDRESS CHANGE**.

SEND **ONLY ONE** SUBSCRIPTION REQUEST TO THE FOLLOWING ADDRESS:

FAA, Regulatory Support Division
ATTN: AFS-640 (Phil Lomax)
P.O. Box 25082
Oklahoma City, OK 73125-5029

If you require more than one copy of AC 43-16, it may be reproduced.

U.S.Department
of Transportation

Federal Aviation Administration

Designation Standardization Branch
ATTN: ALERTS, AFS-640
P.O. Box 25082
Oklahoma City, OK 73125-5029

AFS-640

Official Business
Penalty for Private Use $300

BULK MAIL
POSTAGE & FEES PAID
Federal Aviation Administration
PERMIT No. G44