U.S. Department of Transportation
Federal Aviation Administration

AFS-600
Regulatory Support Division

ADVISORY CIRCULAR

43-16A

AVIATION MAINTENANCE ALERTS

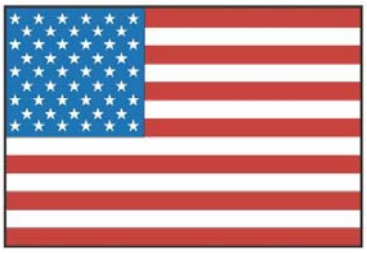

ALERT NUMBER 347

JUNE 2007

CONTENTS

AIRPLANES

BEECH 1
BOEING 2
CESSNA 4
DIAMOND 4
PIPER.....4
RAYTHEON.....6

HELICOPTERS

SIKORSKY.....7

POWERPLANTS

CONTINENTAL 7
PRATT AND WHITNEY.....7

AIR NOTES

INTERNET SERVICE DIFFICULTY REPORTING (iSDR) WEB SITE.....8
IF YOU WANT TO CONTACT US 9
AVIATION SERVICE DIFFICULTY REPORTS 9

U.S. DEPARTMENT OF TRANSPORTATION
FEDERAL AVIATION ADMINISTRATION
WASHINGTON, DC 20590

AVIATION MAINTENANCE ALERTS

The Aviation Maintenance Alerts provide a common communication channel through which the aviation community can economically interchange service experience, cooperating in the improvement of aeronautical product durability, reliability, and safety. This publication is prepared from information submitted by those who operate and maintain civil aeronautical products. The contents include items that have been reported as significant, but have not been evaluated fully by the time the material went to press. As additional facts such as cause and corrective action are identified, the data will be published in subsequent issues of the Alerts. This procedure gives Alerts' readers prompt notice of conditions reported via a Mechanical Reliability Report (MRR), a Malfunction or Defect Report (M or D), or a Service Difficulty Report (SDR). Your comments and suggestions for improvement are always welcome. Send to: FAA; ATTN: Aviation Data Systems Branch (AFS-620); P.O. Box 25082; Oklahoma City, OK 73125-5029.

(Editor's notes are provided for editorial clarification and enhancement within an article. They will always be recognized as italicized words bordered by parentheses.)

AIRPLANES

BEECH

Beech: A36; Loose Downspring Limit Bolt Hardware; ATA 2730

(The following is a nomenclature correction for the above aircraft whose defect submission is found in April's edition of this year's Alerts. The incorrect part name within the heading reads: "Beech: A36; Loose Auto-Pilot Connecting Rod; ATA 2730." Sharp eyes of a production engineer for Hawker/Beech spotted the error and here provides the correct part name and system description.)

"The rod (elevator downspring limit bolt) identified in Alert number 345 was mistakenly identified by the submitter as part of the autopilot system. The limit bolt is an integral component of the downspring system and is required equipment on all model 36 and most model 33 Bonanza airplanes for static longitudinal stability. The limit bolt is a necessary part of the elevator control system and must be properly installed to meet airworthiness requirements.

"When inspecting for proper limit bolt installation in the 002-524024-51 elevator bell crank assembly, there must be at least two threads extending through the self locking nuts at each end. It is permissible to tighten the nuts to a maximum torque of 70 inch pounds.

"The limit bolt is not rigidly fixed to the bell crank (slip fit) and some axial and radial movement of the limit bolt is a normal part of the elevator bell crank assembly design.

"Item 430 in the following illustration is the elevator downspring limit bolt (as shown in the G36 illustrated parts catalog). Item 436 in the following illustration is the self-locking nut (two required). The washers are not shown, but are installed under each nut."

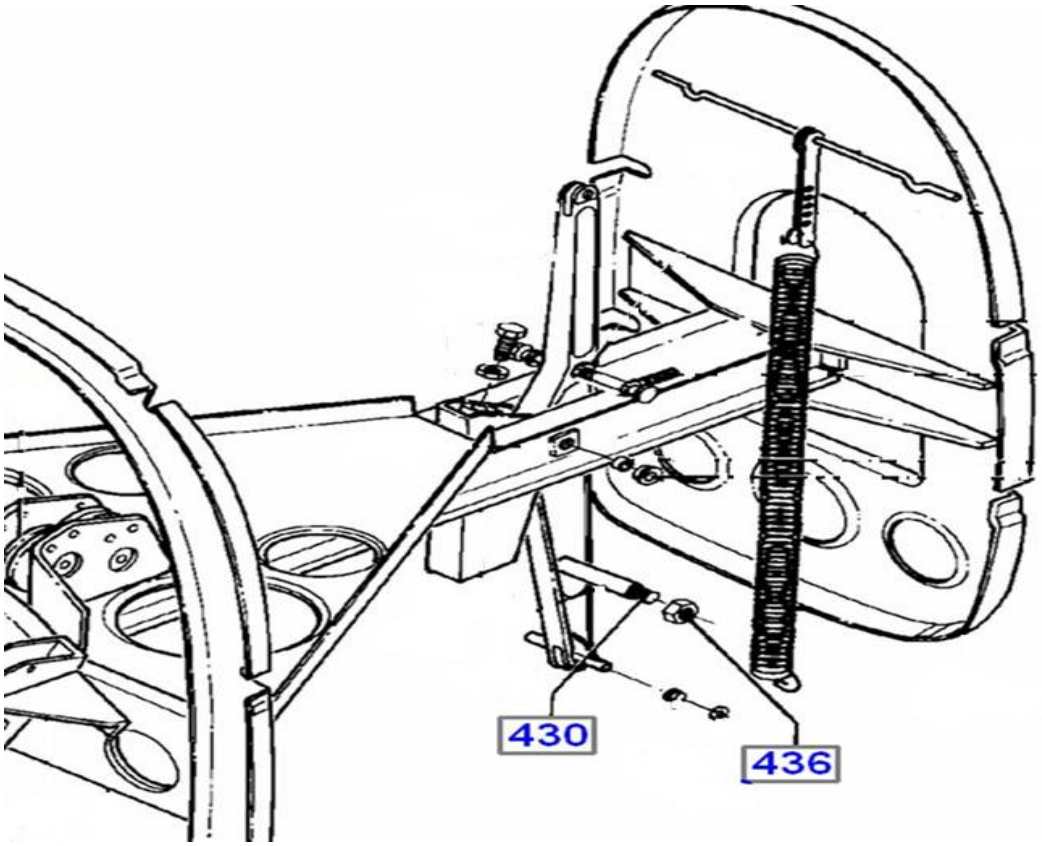

("Thank-you" to Hawker Beechcraft Engineering for the correction, discussion—and their readership! Provided customer support numbers are 1-800-429-5372 or 316-676-3140.)

Part Total Time: N/A.

Beech: B100; Jammed Fuel Linkage; ATA 7620

This submitter states, "During a check ride, the chief pilot shut down the R/H engine in flight. When attempting a restart, the fuel cut-off lever jammed in the cut-off position. The crew conducted a successful and uneventful single engine landing at the base airport. Upon investigation, the technician discovered the aft shroud on the R/H starter generator *(P/N 23079-000-1)* had slipped aft, blocking the linkage while still in the cut-off (position). The shroud was repositioned and its clamp secured."

Part Total Time: 322.0 hours.

BOEING

Boeing: 737-3GF; Improper Oxygen Cable Routing; ATA 3520

A submission from an English repair station describes an oxygen activation defect. "The actuating cables to the chemical oxygen generators on passenger service units were found to be incorrectly routed—under the support pin and resting on the plastic molding." *(See the following diagram.)*

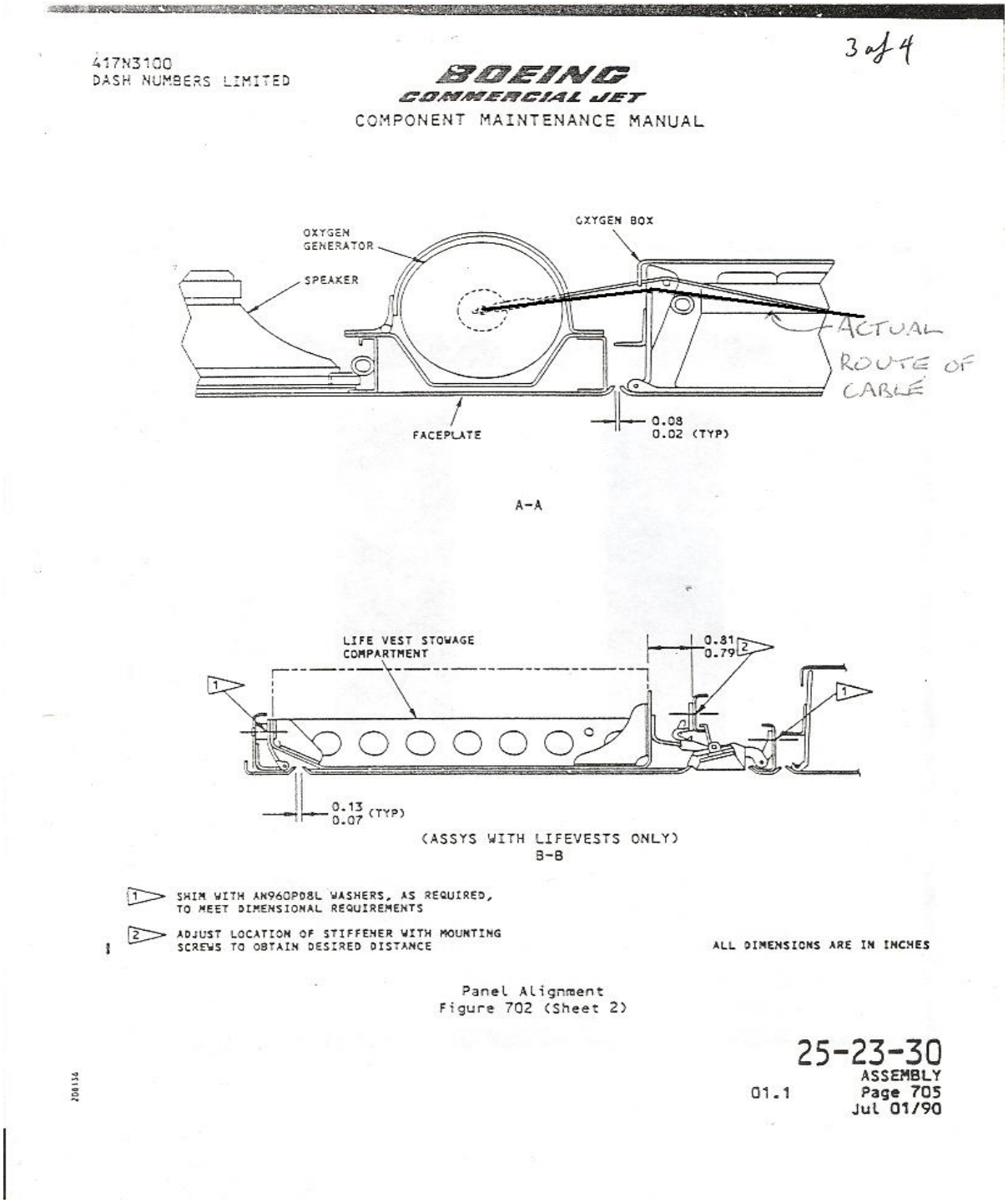

(A search of the FAA Service Difficulty Reporting System data base revealed one additional entry for this cable: P/N 417N3100293.)

Part Total Time: (unknown).

CESSNA

Cessna: 300/400 Series; Corroded Trim Tab Screws; ATA 5523

"There are four screws which hold the elevator trim tab horn to the trim tab," states this repair station technician. We have started to remove these screws on every annual *(inspection)* we *(perform)* on 300/400 series Cessna's. We have found numerous screws corroded almost in half. There is not a way to inspect these screws without removal. Due to the critical nature of these *(fasteners)* and the aging fleet, we recommend mandatory removal and inspection at each annual inspection." *(P/N's AN515-8R26 and MS35206-251. A quick look at these remaining "screws" corroborates your wise admonition—Ed.)*

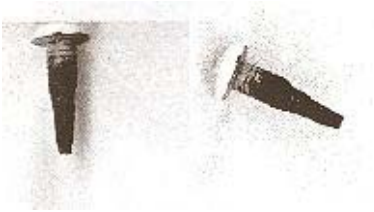

Part Total Time: (unknown).

DIAMOND

Diamond: DA20-A1; Backwards ELT Installation; ATA 2562

A repair station technician says, "When removing an ELT *(emergency location transmitter)* from the aircraft for battery replacement, *(I)* found someone had put the ELT in backwards. The direction of flight arrow was pointing aft. This *(particular)* installation is located in the baggage compartment—a pilot can slide it out of its mount and reinstall it backwards." *(ELT P/N EBC-0502.)*

Part Total Time: (unknown).

PIPER

Piper: PA23-160; Failed Main Gear Drag Link; ATA 3230

"During an investigation," states an FAA inspector, "it was discovered that the right main landing gear upper drag link assembly (P/N 16190-00) had failed at the attach point for the main landing gear down lock latch assembly. A visual inspection of the broken drag link showed the assembly had a metal fatigue crack along the circumference of the component. The cracked areas showed evidence of corrosion that appears to have been *(present)* for a long period of time."

Part Total Time: 11,450.0 hours.

Piper: PA31T; Chafed Hydraulic Line; ATA 2910

"The customer reported red fluid seep at the top, inboard *(area)* of the right wing," states the submitter. "The *(wing's)* inboard leading edges were removed. It was determined a leading edge retaining screw had chaffed the right hydraulic pressure line *(P/N 50157-001)*, causing a hydraulic leak. The line was replaced and the aircraft was returned to service. This area is not normally accessed during periodic inspections. It is suggested this area be inspected at 800 hour intervals."

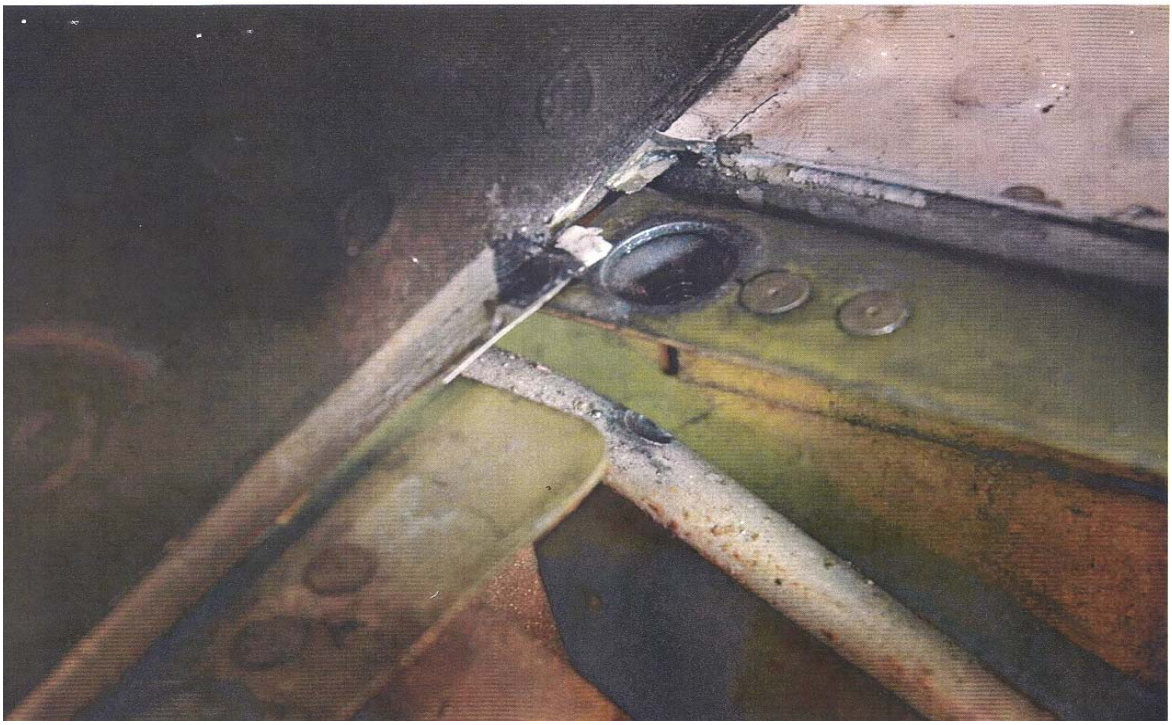

Part Total Time: 5,144.2 hours.

RAYTHEON

Raytheon: HS125-700A; Burned Florescent Power Supply; ATA 3320

An unidentified submitter from a repair station writes, "The aircraft was disassembled for inspection. During re-assembly, we noted the grounding straps on the cabin valence lights were broken. The grounding straps were repaired, the aircraft re-assembled, and *(electrical)* power applied *(to the systems for operational checks.)* Power was on the aircraft for many hours.

"During turnover to second shift we noticed a spark in the overhead lighting. *(When)* we dropped the valence to investigate, the power supply blew up *(Day-Ray Products; P/N 61-21-3)*. Upon further investigation we noticed silicone sealant was used to keep the grounding straps from rubbing on the lamp holders. This particular lamp holder's *(sealant)* was worn down and the grounding strap was *(shorting to the electrically hot, lamp holder)*. This caused the power supply to overheat and blow up. We readjusted the grounding straps to keep them away from the lamp holders. The power supply was suppose to shut the lights off in the event of a short, but this one did not. *(A search of the FAA Service Difficulty Reporting System data base revealed two additional entries having trouble with this power supply.)*

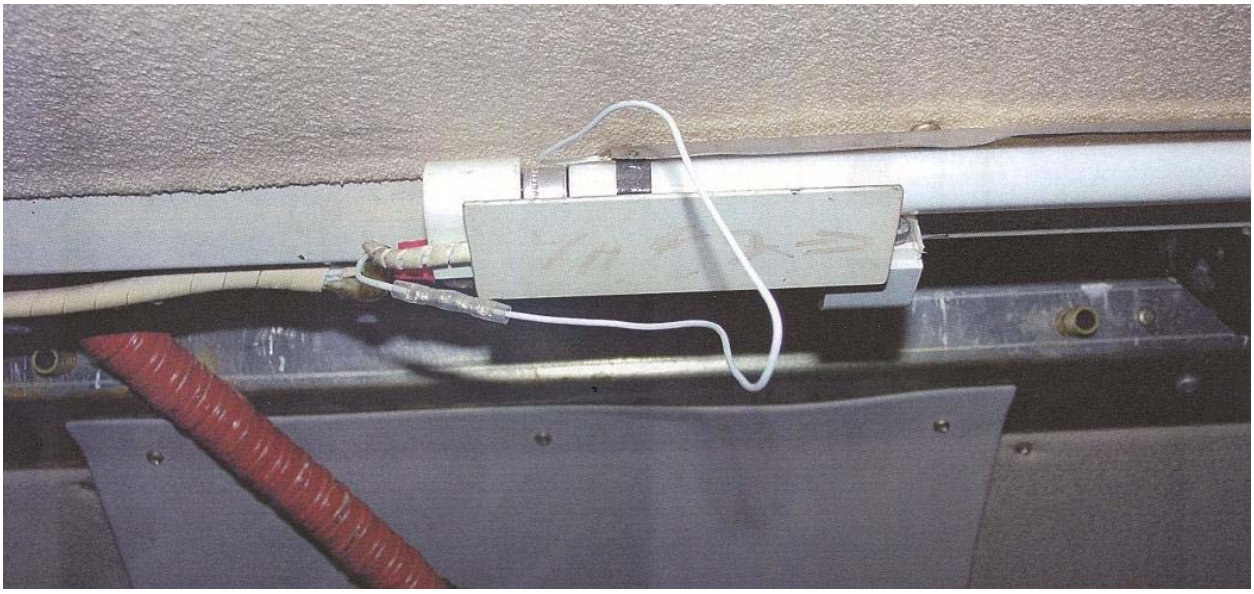

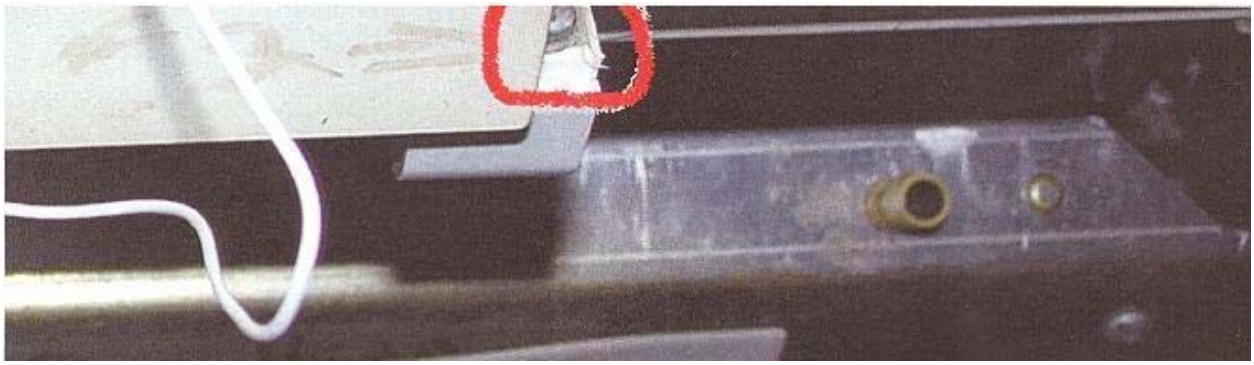

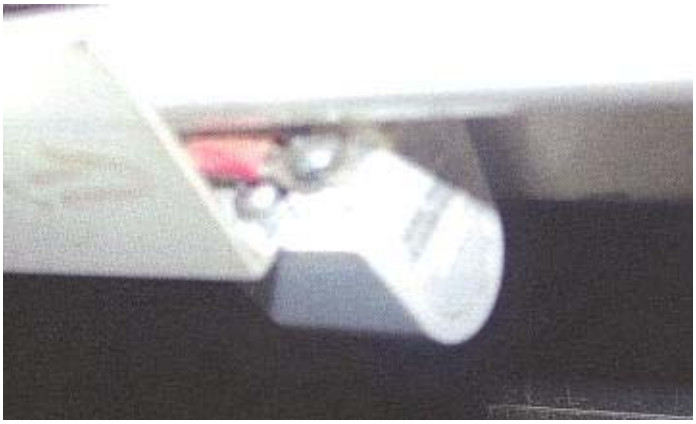

Part Total Time: (unknown).

HELICOPTERS

SIKORSKY

Sikorsky: S76B; Broken Gear Box Vent Tube; ATA 6320

A technician for an air ambulance operation writes, "The aircraft departed from our facility enroute to pick up a patient. Within four minutes of take-off the medical crew reported they smelled smoke in the cabin. It was becoming visible—the pilot noticed it about the same time *(as the crew)*. The *(aircraft returned to base)* without delay. Approximately 30 seconds before touchdown the baggage compartment smoke detector went off. The aircraft landed without incident.

"Subsequent investigation showed the number two engine accessory gearbox vent tube had broken free of the engine deck fitting. This overboard breather tube is made of a vinyl material and had deteriorated to the point of breaking off the fitting on the bottom of the engine deck. This tube runs through the aft corners of the baggage compartment and when the tube broke, it filled the compartment with an oil mist/vapor that illuminated the smoke detector. The vinyl tube *(P/N 76500-04503-074)* was replaced and the tube returned to service."

Part Total Time: (unknown).

POWERPLANTS

CONTINENTAL

Continental: TSIO360SB; Worn Piston Lands; ATA 8530

An unidentified submitter writes, "The oil control ring lands on a piston *(from this engine)* is severely eroded at the piston pin hole on both sides. This is the thirteenth TCM piston we have seen *(with this defect)*. Our engine shop in California has twelve *(of these pistons)* with the same problem. We have one to show you—total time is 700 hours." *(Piston P/N 646743 reflects four additional entries in the* FAA Service Difficulty Reporting System data base*. This is an excellent example where a carefully composed photograph would be most helpful--Ed.)*

Part Total Time: 700.0 hours.

PRATT AND WHITNEY

Pratt and Whitney; PT6-63D; Engine Chip Light Warning; ATA 7930

A technician for an air carrier writes, "During the flight this *(Bell 412EP)* aircraft experienced a number one engine chip light. The master caution was extinguished and the *(chip warning light)* went out. About two seconds later the light came back on with the master caution. This master caution was again extinguished—it went out—and then again came on. At this point the pilot elected to turn around and return to base.

"The time to the offshore facility and the shore was about the same time—that is why the decision was made to return to shore. After the light came on again for the forth or fifth time in two minutes the pilot decided—rather than lose the engine and not have it available if needed—to secure the engine.

"This engine had just come out of a 300 hour inspection. It is possible the *(chip detection warning)* was just an *(errant)* sliver on the plug, but the pilot could not take that chance. The flight back to base and landing was uneventful. Maintenance was dispatched to base. *(They)* inspected the engine chip plugs and *(indeed)* found a small sliver on one of the plugs. The sliver was removed and the plug reinstalled and safety-wired. The aircraft was then given a 20 minute check-run for an additional chip-light *(occurrences)* and was then released back into

service by maintenance. The aircraft was flown for another four hours that day without further problems. Aircraft total time is 271.6 hours and the number one engine total time is 271.6 hours."

Part Total Time: 271.6 hours.

AIR NOTES

INTERNET SERVICE DIFFICULTY REPORTING (iSDR) WEB SITE

The Federal Aviation Administration (FAA) Internet Service Difficulty Reporting (iSDR) web site is the front-end for the Service Difficulty Reporting System (SDRS) data base that is maintained by the Aviation Data Systems Branch, AFS-620, in Oklahoma City, Oklahoma. The iSDR web site supports the Flight Standards Service (AFS), Service Difficulty Program by providing the aviation community with a voluntary and electronic means to conveniently submit in-service reports of failures, malfunctions, or defects on aeronautical products. The objective of the Service Difficulty Program is to achieve prompt correction of conditions adversely affecting continued airworthiness of aeronautical products. To accomplish this, Mechanical Reliability Reports (MRRs), Malfunction or Defect Reports (M or Ds), or Service Difficulty Reports (SDRs) as they are commonly called, are collected, converted into a common SDR format, stored, and made available to the appropriate segments of the FAA, the aviation community, and the general public for review and analysis. SDR data is accessible through the "Query SDR data" feature on the iSDR web site at: http://av-info.faa.gov/sdrx/.

In the past, the last two pages of the Alerts contained a paper copy of FAA Form 8010-4, Malfunction or Defect Report. To meet the requirements of *Section 508, this form will no longer be published in the Alerts; however, the form is available on the Internet at: http://forms.faa.gov/forms/faa8010-4.pdf. You can still download and complete the form as you have in the past.

*Section 508 was enacted to eliminate barriers in information technology, to make available new opportunities for people with disabilities, and to encourage development of technologies that will help achieve these goals.

A report should be filed whenever a system, component, or part of an aircraft, powerplant, propeller, or appliance fails to function in a normal or usual manner. In addition, if a system, component, or part of an aircraft, powerplant, propeller, or appliance has a flaw or imperfection, which impairs or may impair its future function, it is considered defective and should be reported under the Service Difficulty Program.

The collection, collation, analysis of data, and the rapid dissemination of mechanical discrepancies, alerts, and trend information to the appropriate segments of the FAA and the aviation community provides an effective and economical method of ensuring future aviation safety.

The FAA analyzes SDR data for safety implications and reviews the data to identify possible trends that may not be apparent regionally or to individual operators. As a result, the FAA may disseminate safety information to a particular section of the aviation community. The FAA also may adopt new regulations or issue airworthiness directives (ADs) to address a specific problem.

The iSDR web site provides an electronic means for the general aviation community to voluntarily submit reports, and may serve as an alternative means for operators and air agencies to comply with the reporting requirements of 14 Title of the Code of Federal Regulations (CFR) Section 121.703, 125.409, 135.415, and 145.221, if accepted by their certificate-holding district office. FAA Aviation Safety Inspectors may also report service difficulty information when they conduct routine aircraft maintenance surveillance as well as accident and incident investigations.

The SDRS data base contains records dating back to 1974. At the current time, we are receiving approximately 40,000 records per year. Reports may be submitted to the iSDR web site on active data entry form or submitted hardcopy to the address below.

The SDRS and iSDR web site point of contact is:

Tom Marcotte
Service Difficulty Reporting System, Program Manager
Aviation Data Systems Branch, AFS-620
P.O. Box 25082
Oklahoma City, OK 73125
Telephone: (405) 954-6500
SDRS Program Manager e-mail address: 9-AMC-SDR-ProgMgr@faa.gov

IF YOU WANT TO CONTACT US

We welcome your comments, suggestions, and questions. You may use any of the following means of communication to submit reports concerning aviation-related occurrences.

Editor: Daniel Roller (405) 954-3646
FAX: (405) 954-4570 or (405) 954-4655

E-mail address: Daniel.Roller@faa.gov

Mailing address: FAA, **ATTN: AFS-620 ALERTS**, P.O. Box 25082, Oklahoma City, OK 73125-5029

You can access current and back issues of this publication from the internet at: http://av-info.faa.gov/. Select the General Aviation Airworthiness Alerts heading.

AVIATION SERVICE DIFFICULTY REPORTS

The following are abbreviated reports processed for the previous month, which have been entered into the FAA Service Difficulty Reporting (SDR) System data base. This is not an all-inclusive listing of Service Difficulty Reports. For more information, contact the FAA, Regulatory Support Division, Aviation Data Systems Branch, AFS-620, located in Oklahoma City, Oklahoma. The mailing address is:

FAA
Aviation Data Systems Branch, AFS-620
PO Box 25082
Oklahoma City, OK 73125

To retrieve the complete report, click on the Control Number located in each report. These reports contain raw data that has not been edited. Also, because these reports contain raw data, the pages containing the raw data are not numbered.

If you require further detail please contact AFS-620 at the address above.

Federal Aviation Administration

Service Difficulty Report Data

Sorted by aircraft make and model then engine make and model. This report derives from unverified information submitted by the aviation community without FAA review for accuracy.

Control Number / Difficulty Date	Aircraft Make / Aircraft Model	Engine Make / Engine Model	Component Make / Component Model	Part Name / Part Number	Part Condition / Part Location
2007FA0000235				BLADE	MISREPAIRED
3/17/2007				F8483	PROPELLER
(REF NR 38430A) 2 OF 3 PROPELLER BLADES WERE PREVIOUSLY REPAIRED USING AN UNAPPROVED WELD METHOD IN SEVERAL LOCATIONS ON THE BLADE AIRFOIL. THE BLADES HAVE BEEN SCRAPED PENDING DISPOSITION INSTRUCTIONS FROM MFG. THE CUSTOMER HAS BEEN CONTACTED FOR HISTORICAL RECORDS. (K)					
2007FA0000119				STARTER GEN	OUT OF TOLERANCE
2/8/2007				23085001	
S/G SUSPECTED TO HAVE IMPROPER DRIVE SHAFT INSTALLED. DRIVE SHAFT MEASURES LONGER THAN ANOTHER S/G WITH SAME PN. ENGINE HAVE THEIR STARTER MOUNT BEARING FAIL.					
2007FA0000392				TAB	CRACKED
3/1/2007					
WHEN TECH WENT TO BEND THE TAB ATTACHED TO THE WASHER AT THE RADIUS OF THE BEND, THEY WOULD CRACK. (K)					
2007FA0000352		CONT		CARBURETOR	MALFUNCTIONED
4/24/2007		A65*		3801552	ENGINE
CARBURETOR WAS SENT IN FOR AN OVERHAUL BECAUSE IT WOULD NOT ACCEPT THROTTLE. THERE WAS VERY LITTLE TIME ON THE CARBURETOR SINCE IT'S LAST OVERHAUL. UPON DISASSEMBLY, IT WAS FOUND THAT THE CARBURETOR HAD THE WRONG VENTURI INSTALLED AND THERE WAS OLD CORROSION IN THE FLOAT CHAMBER THAT WAS NOT REMOVED DURING THE PREVIOUS OVERHAUL. IT HAD THE WRONG SEAT INSTALLED FOR THE TYPE NEEDLE THAT WAS BEING USED. IT WAS OBVIOUS THAT SOMEONE WHO THOUGHT THEY KNEW CARBURETORS HAD ATTEMPTED TO OVERHAUL THE UNIT UNSUCCESSFULLY.					
2007FA0000436		CONT		CYLINDER	CRACKED
4/10/2007		IO520*		649169	ENGINE
PARTIAL HEAD AND BARREL SEPARATION. LARGE CRACK STARTING AT THE FUEL INJECTOR PORT RUNNING INTO THE CYLINDER HEAD COMBUSTION CHAMBER, THROUGH THE INTAKE SEAT BOSS AND CONTINUING AROUND TO THE LOWER SPARK PLUG BOSS.					
2007FA0000277		CONT		CRANKSHAFT	FAILED
3/22/2007		TSIO360EB		A049405N	ENGINE
CRANKSHAFT FAILED NDI SB MSB96-10. (K)					
CA070403003		GARRTT	WOODWARD	DRIVE GEAR	MAKING METAL
3/21/2007		TPE331*		3020094	PROPELLER GOV
(CAN) CONSTANT SPEED, SINGLE ACTING PROPELLER GOVERNOR P/N 895490-10 WAS RECEIVED AT MFG WITH REPORTED PROBLEM CUSTOMER RETURNED ON IN TRANSIT B69894 AND IRR NR 5170 STATING PROP GOVERNOR HAS NO RESET PRESSURE AND SHAFT STICKS AND WILL NOT RETURN TO MINIMUM STOP. THE FAULT WAS NOT CONFIRMED BY AN EXTERNAL VISUAL INSPECTION. A (RUN AS RECEIVED) WAS PERFORMED					

AND THE FOLLOWING WAS NOTED: (PUMP CAPACITY WAS 7.8 QPM, SHOULD HAVE BEEN 9.0 QPM) RELIEF VALVE PRESSURE WAS 440 PSI, SHOULD HAVE BEEN 465 +/- 20 PSI MAGNETIC PICKUP WAS 3.2 VOLTS AT 3700 RPM, SHOULD HAVE BEE 4.5 +/- 0.2 VOLTS THE UNIT WAS SYSTEMATICALLY DISASSEMBLED IAW COMPONENT MM (CMM 33091C, 1986), AND SIGNIFICANT DAMAGE WAS FOUND TO SEVERAL INTERNAL COMPONENTS. THE FOLLOWING PROVIDES A MORE DETAILED LOOK AT THE DAMAGED COMPONENTS. OBSERVATIONS: THE DISMANTLING STARTED WITH THE UPPER SECTION OF THE GOVERNOR. ON REMOVAL OF THE UPPER COVER, THE FLYWEIGHT CAVITY WAS FOUND TO BE INTACT AND CLEAR OF ANY FOREIGN OBJECTS. THE MAGNETIC PICKUP WAS FOUND TO BE PROPERLY POSITIONED. THE FLYWEIGHT ASSEMBLY WAS REMOVED FROM THE HOUSING TO ALLOW FOR FURTHER DISMANTLING. THE BASE WAS REMOVED WITH SOME UNUSUAL DIFFICULTY. UPON REMOVAL OF THE BASE IT WAS NOTED THAT THERE WAS SIGNIFICANT DAMAGE TO THE FOLLOWING COMPONENTS: BODY P/N 4030-126, BASE P/N 4000-076, DRIVE GEAR P/N 3020-094 AND IDLER GEAR P/N 204864. THE FACES OF THE BODY, BASE AND GEAR LOBES WERE FOUND WITH HEAVY SCORING. THE DAMAGE WAS CONTAINED TO THE PUMP SECTION OF THE UNIT. (TC NR 20070403003)

CA070409007	GARRTT	GEAR	UNKNOWN
2/28/2007	TPE33110UG		FUEL PUMP

(CAN) GEARS DRIVING THE FUEL PUMP FAILED CAUSING THE ENGINE TO SHUTDOWN IN FLIGHT. (TC NR 20070409007)

CA070216008	GE	GE	BLADE	CRACKED
2/16/2007	CT581401		5009T34P01	COMPRESSOR

(CAN) ON INSPECTION, A STAGE 4 BLADE WAS FOUND TO HAVE A 0.080 INCH CRACK THROUGH THE DOVE TAIL AREA ON THE TRAILING EDGE SIDE. OUR FILE NR SQID 07-00588 (TC NR 20070216008)

2007FA0000351	LYC	THRUST BEARING	FAILED
4/24/2007	LF5071F	230319303	SUPERCHARGER

NR 8 THRUST BEARING FAILURE RESULTED IN FAN AND SUPERCHARGER ROTORS TO SHIFT FORWARD CAUSING DAMAGE TO SUPERCHARGER 2ND DISK TO CONTACT THE STATORS MACHINING THROUGH THE 2ND SUPERCHARGER DISK WEB, RESULTING IN IN-FLIGHT SHUTDOWN OF NR 1 ENGINE. OPERATIONAL DESCRIPTION OF EVENT DID NOT INDICATE LOW OIL PRESSURE PRIOR TO THE FAILURE. WARNING SEQUENCE WAS DESCRIBED AS (1) SMELL IN THE CABIN, HIGH VIBRATIONS WARNING AND VISUAL SPARKES COMING FROM ENGINE, THEN SHUT-DOWN. BEARING APPEARS TO BE STARVED OF OIL UPON DISASSEMBLY, ALONG WITH VERY LOW OIL CONTENT IN ADJACENT NR 9 BEARING AND PLANETARY REDUCTION GEAR CARRIER. CURRENTLY INVESTIGATING CAUSE OF OIL STARVATION. LUBE PUMP IS FROZEN, BUT ENGINE NR 2 AND NR 4 BEARINGS WERE LUBRICATED. PERFORMING METALLURGICAL ANALYSIS OF OIL. REMAINS OF BEARING, LUBE PUMP, FULL FLOW OIL FILTER SCREEN, SUPERCHARGEER ROTATING AND STATIC HARDWARE AND REDUCTION GEAR CARRIER HAVE BEEN SUBMITTED TO MFG ENGINEERING FOR FAILURE ANALYSIS. (K)

CA070420002	LYC	BOLT	FAILED
4/17/2007	LTIO540J2BD	SL12596	CONNECTING ROD

(CAN) BOLT FAILED CAUSING CONNECTING ROD TO BECAME DETACHED FROM CRANKSHAFT CAUSING MAJOR DAMAGE TO LOWER END OF ENGINE. (TC NR 20070420002)

CA070424005	PWA	COMPRESSOR WHEEL	MAKING METAL
4/24/2007	PT6A27		ENGINE

(CAN) OPERATOR REPORTED THAT WHEN THE ENGINE WAS STARTED, THE PROPELLER DID NOT ROTATE. AFTER SHUTDOWN, THE ENGINE AND PROP COULD BE ROTATED BY HAND. HOWEVER, SEVERAL SMALL PIECES OF METALLIC DEBRIS WAS REMOVED FROM THE EXHAUST AREA. DISASSEMBLY OF THE ENGINE REVEALED SEVERE IMPACT DAMAGE ON THE FWD FACE OF THE CT DISC ASSY AND 4 MISSING CT VANE RETAINING BOLTS. FURTHER INVESTIGATION REVEALED IMPACT DAMAGE ON THE CT VANE LOCK PLATE, CT VANE, CT BLADES AND PT BLADES. (TC NR 20070424005)

CA070125005	PWA	BLADE	FAILED
1/25/2007	PT6A65B	312111101	TURBINE SECTION

(CAN) THE ENGINE PT6A-65B S/N: PCE-32399 WAS RECEIVED FOR OVERHAUL. DURING THE ENGINE DISASSEMBLING IT WAS FOUND THAT THE COMPRESSOR TURBINE BLADES WERE SEVERELY RUBBED AND ONE BLADE FAILED AT FIRTREE. ALSO THE INSPECTION REVEALED THAT THE COMPRESSOR TURBINE VANE TRAILING EDGE, SHROUD SEGMENTS AND SHROUD HOUSING ARE DAMAGED. THE POWER TURBINE COMPONENTS: 1ST AND 2ND STAGES BLADES AND VANES FOUND IMPACT DAMAGED. THE BLADE WHICH FAILED AT THE FIRTREE SHOWED EVIDENCE OF FATIGUE WITH AN ANOMALY AT THE ORIGIN. NOTE: CODES DETERMINED FROM PILOT REPORT. (TC NR 20070125005)

CA070418006		PWA	CYLINDER HEAD	CRACKED
3/22/2007		R985AN14B	CH90ER	ENGINE

(CAN) ON 100 HR INSPECTION DURING A DIFFERENTIAL CHECK CYLINDER WAS READING LOW. USING A SOAP SOLUTION IT WAS DETERMINED THAT THERE WAS A LEAK ACROSS THE HEAD DUE TO A CRACK BETWEEN THE COOLING FINS. (TC NR 20070418006)

CA070201005	AEROSP	PWA	WASHER	SPLIT
1/30/2007	ATR42300	PW120	S27010022120100	AILERON

(CAN) THE CREW OBSERVED BINDING IN THE AILERON SYSTEM WHILE EXECUTING A RT TURN DURING DEPARTURE. THE AIRCRAFT RETURNED TO POINT OF DEPARTURE WITHOUT FURTHER PROBLEM. POST FLIGHT INSPECTION DETECTED A LOCATION IN THE SYSTEM WHICH EXHIBITED AN INCREASED RESISTANCE TO TRAVEL WHEN CYCLING THE SYSTEM BUT THERE WAS NO RESTRICTION TO FULL MOVEMENT. MAINTENANCE FOUND A SPLIT TEFLON WASHER FOULING THE BEARING AT THE SWING LINK BETWEEN RIBS 8 AND 9. THE WASHER WAS REPLACED AND THE AIRCRAFT WAS RETURNED TO SERVICE WITHOUT FURTHER PROBLEM. (TC NR 20070201005)

CA070306004	AEROSP	PWA	WINDSHIELD	FAILED
3/8/2007	ATR42300	PW120		COCKPIT

(CAN) ON DESCENT THE LT WINDSHIELD OUTER PANE FAILED. THE AIRCRAFT LANDED AT DESTINATION WITHOUT FURTHER PROBLEM. MAINTENANCE INSPECTED THE AIRCRAFT PRIOR TO RETURN UNDER MEL, WHERE THE WINDSHIELD WAS REPLACED. (TC NR 20070306004)

CA070209007	AEROSP	PWA	TURBINE BLADES	FRACTURED
9/18/2006	ATR42320	PW120		ENGINE

(CAN) ON APPROACH THE ENGINE FIRE WARNING ACTIVATED, ACCOMPANIED BY AN UNCOMMANDED POWER REDUCTION. THE CREW DISCHARGED FIRE BOTTLES AND SHUT THE ENGINE DOWN IN FLIGHT. SUBSEQUENT INVESTIGATION AT MFG REVEALED LPT BLADE FRACTURE IN CREEP. (TC NR 20070209007)

CA070209013	AEROSP	PWA	GEAR	DAMAGED
1/18/2007	ATR72	PW127		GEARBOX

(CAN) THE ENGINE FLAMED OUT IN CRUISE. SUBSEQUENT INVESTIGATION REVEALED DAMAGED TOWERSHAFT DRIVE BEVEL GEARS. (TC NR 20070209013)

AACSDR61606	AGUSTA		DRIVE SHAFT	UNBONDED
6/16/2006	AB139			TAIL ROTOR

NEW AIRCRAFT WAS BEING ASSEMBLED AFTER SHIPPING. DURING ASSEMBLY TAIL ROTOR DRIVESHAFT WAS FOUND SCORED AROUND UPPER FLANGE ATTACHMENT AREA. THIS WAS DIRECTLY BELOW THE TAILROTOR GEARBOX, AT THE TOP OF THE VERTICAL FIN. SCORING WAS CAUSED BY A (CLICK-BOND) TYPE FASTENER/STANDOFF USED TO SECURE A WIRE HARNESS. THE FASTENER CAME UNBONDED FROM THE FUSELAGE AND ALLOWED THE WIRE HARNESS TO CONTACT THE DRIVESHAFT. THE CLAMP AND SCREW CAUSED THE SCORING ON THE DRIVESHAFT FLANGE.

2006FA0000483	AGUSTA		BOLT	GOUGED
4/28/2006	AB139		3G62200A251	MAIN ROTOR

UPON RECEIPT OF THE AIRCRAFT, THE MAIN ROTOR BLADE BOLTS WERE REMOVED FOR INSPECTION. IT WAS DISCOVERED THAT ONE BLADE BOLTS HAS A RADIAL GOUGE MARK AT THE LOWER BLADE TO HUB BUSHING LOCATION. THE DAMAGE IS OUTSIDE THE AMM PERMITTED REPAIR LIMITS. THE AC TT IS APPROXIMATELY 58.4

HOURS. ALL OF THE BLADE BOLTS WERE PREVIOUSLY CHANGED APPROX 8.5 HOURS PRIOR TO COMING TO REPAIR STATION. REF: 39A62221300A286AB, MFG HAS BEEN CONTACTED AND PROVIDED THIS INFORMATION. (K)

2006FA0000446	AGUSTA	PWA	BOLT	GOUGED
4/10/2006	AB139	PT6*	3G6220A00251	MAIN ROTOR

DURING ACCOMPLISHMENT OF THE MAIN ROTOR BLADE REMOVAL, IT WAS DISCOVERED THAT EACH OF THE BLADE BOLTS HAS RADIAL GOUGE MARKS AT THE BLADE TO HUB BUSHING LOCATIONS. THE DAMAGE IS OUTSIDE THE AMM PERMITTED REPAIR LIMITS. (REFERENCE: 39A62221300A286AB) MFG HAS BEEN CONTACTED AND PROVIDED THIS INFORMATION. (NOTE: THERE ARE ALSO TYPOGRAPHICAL ERRORS IN THE AMM MILLIMETER TO INCHES CONVERSIONS IN FIGURE 2 INCH (MAXIMUM DAMAGE AND REPAIR DEPTHS). FIG CALLS OUT (MM/IN) 0.02 / 0.0080, SHOULD BE 0.0008. (K)

AACSDR121406	AGUSTA	PWA	LONGERON	CRACKED
12/14/2006	AB139	PT6*	3P5340A11951	TAILBOOM

DURING INSPECTION OF THE TAILBOOM ATTACHMENT POINTS, A CRACK ABOUT 1.5 INCHES LONG WAS DISCOVERED ON THE TOP LT LONGERON AT STA 8700MM.

31038042507	AGUSTA	PWA	WINDOW	DEPARTED
4/25/2007	AB139	PT6*	3G5630F00111A2	CREW DOOR

DURING CRUISE FLIGHT AT AN ALTITUDE OF 2000FT, IAS 152KTS,THE CO-PILOT DOOR WINDOW SEPARATED FROM AIRCRAFT.

TL9R200700001	AIRBUS		BRAKE	MAKING METAL
5/1/2007	A300*		C200601004	MLG

BRAKE ROTORS DE-LINED (STARTED TO FALL APART) IN OPERATION.

CA070411002	AIRBUS	GE	SWITCH	STICKING
4/5/2007	A310304	CF680C2A5	A2757040500200	MLG

(CAN) DURING CLIMB THE AIRCRAFT HAD A (KRUGER) FAULT ECAM WARNING.QAH CARRIED OUT BUT WARNING REMAINED ON. AIRCRAFT RETURNED TO THE STATION. DURING TROUBLESHOOTING THE BITE TEST ON THE SFCC 1 AND 2 FAULTED THE RT RETRACT SWITCH. THE SWITCH WAS FOUND DIRTY AND STICKING AND TARGET WAS FOUND WORN. SWITCH WAS CLEANED AND TARGET ADJUSTED IAW MM. SYSTEM WAS TESTED SERVICEABLE. (TC NR 20070411002)

CA070404004	AIRBUS	GE	HOSE	PUNCTURED
4/4/2007	A310304	CF680C2A5	AE2463774G0164	HYD SYSTEM

(CAN) GREEN HYDRAULIC ECAM MESSAGE LOW LEVER WARNING CAME ON AFTER TAKE OFF. ON ARRIVAL, MAINTENANCE FOUND THE RT MAIN LANDING GEAR DOWN LOCK ACTUATOR FLEX LINE HOSE LEAKING. FOUND HOLE IN FLEX LINE. FLEX LINE WAS REPLACED WITH BOTH HYDRAULIC PUMPS, CASE DRAIN FILTERS AND GREEN SERVO CONTROL MANIFOLD FILTERS. (TC NR 20070404004)

CA070220004	AIRBUS	CFMINT	ENGINE	UNKNOWN
2/13/2007	A319112	CFM565A1		

(CAN) EARLY INVESTIGATIONS POINT TO A NR 4 BEARING FAILURE, AT THIS TIME THE ENGINE HAS NOT BEEN DISSASSEMBLED FOR CONFIRMATION OF FAILURE, PRESENTLY ENROUTE TO SHOP. (TC NR 20070220004)

CA070312002	AIRBUS	CFMINT	BLADES	DAMAGED
3/6/2007	A320211	CFM565A1		COMPRESSOR

(CAN) ON TAKEOFF AT 500 AGL, 3 TO 4 STALLS ON NR 2 ENGINE, LOUD POPPING NOISE, ATC SAW FLAMES COMING OUT. AIRCRAFT RETURNED TO DEPARTURE, ENGINE BOROSCOPE FOUND DAMAGED COMPRESSOR BLADES FROM STAGE 6 TO STAGE 9. ENGINE REMOVED FROM AIRCRAFT AND SENT TO SHOP FOR INVESTIGATION. (L-4298804) (TC NR 20070312002)

CA070115004	AIRBUS	CFMINT	ENGINE	FAILED

1/15/2007	A320214	CFM565B4P		NR 1

(CAN) AFTER POWER SET FOR TAKEOFF, AND TAKEOFF ROLL COMMENCED, ENG NR 1 FAILED. AIRCRAFT TAXIED BACK TO THE GATE. (TC NR 20070115004)

CA070115014	AIRTRC	PWA	SKIN	CRACKED
1/2/2007	AT802	PT6A67A	204382	WING

(CAN) DURING ANNUAL INSPECTION SEVERAL CRACKS WERE DETECTED AT THE RIVET HOLES WHERE THE FLAP BAY SKIN (PN 20438-2) ATTACH TO THE RIB FLANGES. CRACKS WERE STOP DRILLED AND PLATE INSTALLED OVER THE RIB FLANGE AREA IAW AIR TRACTOR INSTRUCTIONS (ATTACHED). THIS PROBLEM HAS BEEN FOUND ON EARLY SN AIRCRAFT (802-001 - 802A-0014), SUBSEQUENT S/N HAD EXTRA RIVETS INSTALLED BY MFG. THIS AIRCRAFT S/N IS 802-0121. (TC NR 20070115014)

DJS041707	AMTR		SENSOR	FAULTY
4/17/2007	ECLIPSE500		35C155103	ENGINE

INFLIGHT SHUTDOWN IAW AFM DUE TO LOSS OF OIL TEMPERATURE. TROUBLESHOT TO A FAULTY MOT/MOP SENSOR.

MDR041607	AMTR		TIRE	FAILED
4/16/2007	ECLIPSE500			LT MLG

LT MAIN LANDING GEAR WHEEL AND TIRE ASSEMBLY BLEW OUT DURING TAXI. WHEEL HAS BEEN QUARANTINED AND WILL BE FORWARDED TO AN INDEPENDENT INSPECTION LAB FOR FURTHER REVIEW.

2007FA0000416	AMTR	LYC	CARBURETOR	CONTAMINATED
4/15/2007	HATZVAN	O235C1	103103	ENGINE

DURING INSPECTION OF THE CARBURETOR, DISCOVERED FLAKES OF WHAT APPEARS TO BE METAL IN THE GASCOLATOR SCREEN. ALSO, OBSERVED SOME SPECS OF RED MATERIAL ABOUT THE SIZE OF PEPPER. WHEN WE PULLED THE CARB APART WE OBSERVED A LINE ON THE BOTTOM OF THE BOWL WHERE SEDIMENT HAD PREVIOUSLY SETTLED IN THE BOWL. HOWEVER, NOTHING SIGNIFICANT WAS NOTED IN THE BOWL DURING OUR INSPECTION. FURTHER INSPECTION REVEALED THAT ONCE THE NEEDLE VALVE WAS SEATED BY LIGHTLY PRESSING THE FLOAT UPWARD, IT WOULD THEN REMAIN SEATED EVEN IF AIR WAS BLOWN IN THE FUEL INLET PORT. HOWEVER, IF THE FLOAT WAS MANIPULATED UP AND DOWN A FEW TIMES, THE NEEDLE VALVE WOULD THEN NOTICEABLY POP FREE. AND ALTHOUGH NO OBVIOUS DEBRIS WAS NOTED UPON DISASSEMBLY, THE RUBBER SEAT WAS NOTICEABLY GROOVED OR WORN. ADDITIONALLY, THE SOLDER ON THE FLOAT SEAT WAS NOT IAW FACTORY INSTRUCTIONS.

CA070212003	BAG		STEERING SYS	UNSERVICEABLE
2/7/2007	JETSTM3212			NLG

(CAN) INTERNAL STEERING MECHANISM SLOPPY. A/C HARD TO CONTROL DURING TAXI. NOSE LANDING GEAR REMOVED AND REPLACED WITH OVERHAULED UNIT, GROUND TEST CARRIED OUT AND FOUND SERVICEABLE. DEFECTIVE LANDING GEAR HAS NOT BEEN SHIPPED FOR OVERHAUL AT THIS TIME. (TC NR 20070212003)

CA070212005	BAG	GARRTT	ENGINE	UNSERVICEABLE
2/7/2007	JETSTM3212	TPE33110UG	TPE33110UG	

(CAN) DURING PRE FLIGHT INSPECTION FLIGHT CREW HEARD ABNORMAL NOISE COMING FROM ENGINE WHILE THEY TURNED THE PROPELLER. MAINTENANCE WAS NOTIFIED AND ENGINE WAS INSPECTED, SUSPECT REAR BEARING FAILURE, OIL SYSTEM INSPECTED AND FOUND TO HAVE NO METAL CONTAMINATION. ENGINE REMOVED AND HAS NOT YET BEEN SENT FOR REPAIR. (TC NR 20070212005)

CA070215002	BAG	GARRTT	ALIDSG	HOUSING	BROKEN
2/13/2007	JETSTM3212	TPE33110UG			ACCESSORY DRIVE

(CAN) ACCESSORY DRIVE HOUSING BOTTOM CASE DRAIN THREADED MOUNTING BOSS DISCOVERED BROKEN. ENGINE REMOVED AND LOANER ENGINE INSTALLED. (TC NR 20070215002)

CA070131007	BAG	GARRTT	WINDSHIELD	DELAMINATED

1/28/2007	JETSTM3212	TPE33110UG	1379628C401	COCKPIT

(CAN) DURING MAINTENANCE INSPECTION, WINDOW WAS FOUND TO BE DELAMINATING AT THE CENTER OF THE BOTTOM EDGE. WINDOW WAS REPLACED. (TC NR 20070131007)

CA070126012	BAG	GARRTT	FEEDER CABLE	LOOSE
1/24/2007	JETSTM3212	TPE33112UHR		RADIO

(CAN) TOTAL LOSS OF CAPT`S RADIO COMMUNICATIONS. TROUBLESHOOTING FOUND MAIN POWER FEED CONNECTION NOT TIGHTEN ON TERMINAL BLOCK T5GA CAUSING CONNECTOR TERMINAL RING TO FLOAT AND REMOVE POWER SUPPLY TO CAPT`S AUDIO STATION BOX (TC NR 20070126012)

CA070219010	BAG	GARRTT	WIRE	DAMAGED
2/19/2007	JETSTM3212	TPE33112UHR		NR 2 NACELLE

(CAN) CREW REPORTED THAT THE AIRCRAFT NR 2 ENGINE STARTED TO SURGE AND THE TORQUE INDICATION FLUCTUATED BETWEEN 0-120 PERCENT. TTL AND SRL COMPUTERS TURNED OFF AND ENGINE SURGE STABILIZED AND CONTINUED TO RUN NORMALLY. INDICATION CONTINUED TO FLUCTUATE. TROUBLESHOOTING INDICATED DAMAGED WIRING IN THE NR 2 ENGINE COMPARTMENT. WIRING REPAIRED. INDICATION CALIBRATED AND NO FURTHER FAULTS FOUND. (TC NR 20070219010)

CA060928003	BBAVIA	LYC	STRINGER	FAILED
9/9/2006	7ECA	O235K2C	222182	FUSELAGE

(CAN) AFTER RECOVERING FROM AN AEROBATIC MANEUVER, THE PILOT FOUND THAT FULL DOWN ELEVATOR TRAVEL COULD NOT BE OBTAINED. A UNEVENTFUL RETURN TO THE AIRPORT AND LANDING WAS CARRIED OUT. ONCE THE ELEVATOR BELLCRANK COVER WAS REMOVED, THE LT GUSSET FROM THE AFT STRINGER SUPPORT FELL OUT AND FULL ELEVATOR TRAVEL WAS OBTAINED. EXAMINATION OF THE GUSSET, SUPPORT AND RIVETS INDICATED THAT VIBRATION OF THE FABRIC IN FLIGHT HAD LOOSENED THE SOFT ALUMINUM POP RIVETS THAT THE MFG HAD USED IN ATTACHING THE GUSSET HAD WORKED LOOSE AND EVENTUALLY BROKEN, ALLOWING THE GUSSET TO FALL INTO THE BELLY AND WORK ITS WAY BACK INTO THE TAIL WHERE IT BECAME LODGED IN THE NARROW CLEARANCES AROUND THE ELEVATOR BELLCRANK. THE SUBMITTER SUGGESTS A THOROUGH VISUAL INSPECTION OF THE BELLY AND TAIL FOR LOOSE OBJECTS DURING 100-HOUR INSPECTIONS. (TC NR 20060928003)

CA070227004	BBAVIA	LYC	TRANSFER TUBE	LOOSE
2/21/2007	8GCBC	O360C2E		OIL SYSTEM

(CAN) CRANKSHAFT FWD CAVITY OIL TRANSFER TUBE LOOSE LATERALLY AND ROTATIONALLY. CRANKSHAFT WAS REPAIRED APPROX 500 HOURS AGO. (TC NR 20070227004)

CA070209019	BEECH		SPAR	CRACKED
1/31/2007	100BEECH		5016000355	RT WING

(CAN) RT IB FLAP P/N 50-160003-97 REMOVED FOR HINGE BRACKET REPLACEMENT. UPON TEARDOWN OF FLAP FOR HINGE BRACKET REMOVAL, AN 8 INCH CRACK WAS NOTED ON THE SPAR UPPER RADIUS. THE CRACK EXTENDED 4 INCHES EITHER SIDE OF THE FLAP ACTUATOR BRACKET ATTACH AREA. PROBABLY CRACKED DUE TO CYCLING OF THE FLAP OVER TIME AND THE LOCALIZED STRESSES IN THAT AREA OF THE FLAP, AROUND THE ACTUATOR BRACKET. CRACK IN SPAR CANNOT BE SEEN WITHOUT DISASSEMBLY OF FLAP. (TC NR 20070209019)

CA070223002	BEECH	GARRTT	WIRE HARNESS	FAILED
2/20/2007	100BEECH	TPE3316252B	8975294	ENGINE ITT

(CAN) FLIGHT CREW DID ATTEMPTED AN ENGINE START NR 2 ENGINE WITH NO SUCCESS. AFTER MAINTENANCE HAD CORRECTED THE PROBLEM ASSOCIATED WITH THE FAILED START, THE CREW PROCEEDED TO CARRY OUT ANOTHER ENGINE START. ONCE THE ENGINE LIT OFF THE CREW NOTED THAT THE ITT WAS CLIMBING RAPIDLY TOWARDS THE RED BUT THEN WOULD DROP AND RISE AGAIN. THEY DECIDED TO CONTINUE WITH THE START. ONCE THE ENGINE HAD SETTLED AT IDLE, THE ITT BEGAN TO FLUCTUATE AND SLOWLY CLIMB TO THE REDLINE. THE CREW DECIDED AT THIS TIME TO SHUTDOWN THE ENGINE. MAINTENANCE TROUBLESHOT THE SYSTEM AND FOUND THAT THE ITT HARNESS WAS U/S. DUE TO THE FACT THAT THEY COULD NOT SPECIFICALLY STATE THAT THE PROBLEM WAS THE HARNESS AND NOT THAT THE HARNESS AND TURBINES HAD BEEN MELTED DUE TO A

HOTSTART THE ENGINE WAS REMOVED AND BROKEN DOWN TO GAIN ACCESS TO THE ITT HARNESS. NO OVERTEMP DAMAGE WAS NOTED, THE HARNESS WAS REPLACED WITH A SERVICEABLE UNIT AND THE ENGINE REASSEMBLED. (TC NR 20070223002)

CA070215003	BEECH	PWA	SPLINE	WORN
2/15/2007	100BEECH	PT6A28		STARTER GEN

(CAN) START ATTEMPTED ON ENGINE. STARTER/GENERATOR ROTATED BUT ENGINE DID NOT. S/G REMOVED AND INSPECTED. S/G SHAFT SPLINE NOTED AS EXTREMELY WORN. ENGINE ACCESSORY HOUSING INTERNAL SPLINE CHECKED FOR WEAR WITH WEAR CHECK TOOL. DIMENSIONS WITHIN ACCEPTABLE LIMITS. S/G REPLACED WITH NEW UNIT. (TC NR 20070215003)

CA070207001	BEECH	PWA	RELAY	INOPERATIVE
2/3/2007	100BEECH	PT6A28	MC815A51	MLG

(CAN) LANDING GEAR IN TRANSIT LIGHT STAYED ON AFTER GEAR WAS SELECTED UP AND AN ALTERNATE GEAR EXTENSION WAS DONE AND THE A/C RETURNED TO BASE. THE LANDING GEAR CONTROL RELAY BOX WAS REPLACED AND LANDING GEAR SYSTEM FUNCTION CHECKED SERVICEABLE. (TC NR 20070207001)

CA070419002	BEECH	PWA	PWC	BLADES	DEPARTED
4/13/2007	100BEECH	PT6A28			COMPRESSOR

(CAN) LT ENGINE EXPERIENCED A SUDDEN POWER LOSS ON CLIMB OUT. THE ENGINE WAS SHUTDOWN AND THE A/C RETURNED TO BASE WITHOUT ANY FURTHER INCIDENT. THE POWER SECTION WAS REMOVED FOR INVESTIGATION. THE INVESTIGATION REVEALED THAT PIECES WERE MISSING FROM SEVERAL CT IGV`S, MULITPLE CT BLADES BEING DAMAGED (IE. MISSING PIECES) AS WELL AS DAMAGE TO SEVERAL PT BLADES AND GUIDE VANES. THE ENGINE HAS 4538.3 HRS AND 4622 CYCLES SINCE O/H AND IS ON CONDITION FOR HOT SECTION INSPECTIONS. THE LAST HSI WAS COMPLETED 2068.6 HRS AND 2695 CYCLES AGO WHEN 0.0 TSO CT BLADES P/N 3039901 WERE RE-INSTALLED. THE ENGINE HAS BEEN SENT FOR O/H AND FURTHER INFO WILL BE AVAILABLE AFTER WHEN A TEARDOWN REPORT BECOMES AVAILABLE (TC# 20070419002)

CA070403001	BEECH	PWA	BOLT	CRACKED
3/28/2007	100BEECH	PT6A28	SPS8178510	WING ATTACH

(CAN) DURING A SCHEDULED NDT INSPECTION OF THE WING ATTACHMENT BOLTS THE FWD UPPER BOLT ON THE RT SIDE WAS REJECTED AFTER THE LIQUID PENETRANT INSPECTION REVEALED A CRACK AT THE HEAD OF THE BOLT. THE BOLT HAD 7540.5 TSN. THIS INSPECTION IS DUE EVERY 1000 HRS. (TC NR 20070403001)

CA070124003	BEECH	PWA	ROLLER	WORN
1/19/2007	100BEECH	PT6A28	99160011	TE FLAPS

(CAN) PILOT REPORTED INTERFERENCE WITH AILERON CONTROL UPON APPROACH WHEN FLAPS WERE APPROXIMATELY 30 PERCENT. AIRCRAFT LANDED WITHOUT INCIDENT. INVESTIGATION REVEALED RT OB FLAP IB HINGE ATTACH BRACKET, PN 35-165050-31, FAILED AT THE AFT ROLLER ASSY ATTACH AREA. THIS IN TURN CAUSED THE OPPOSITE ATTACH BRACKET TO FAIL. THIS CAUSED THE IB AFT AREA OF THE FLAP TO MOVE FREELY AND CHANGE THE NORMAL ATTITUDE OF THE FLAP CAUSING INTERFERENCE WITH THE IB RT AILERON SKIN. THE HINGE ATTACH BRACKET FAILED FROM THE AFT ROLLER ASSY, P/N 99-160011, WEARING INTO THE HINGE ATTACH BRACKET. INSPECTED ALL OTHER HINGE ATTACH AREAS AND FOUND SIMILAR WEAR IN OTHER AFT ROLLER ATTACH LOCATIONS. THE ROLLER ASSEMBLY, PN 99-160011, IS MADE UP OF (2) PARTS, AND INNER BEARING AND AN OUTER ROLLER ASSEMBLY. THESE PARTS ARE A PRESS FIT AND SHOULD NOT MOVE. IT WAS FOUND THAT THE ROLLER ASSEMBLY AT OTHER LOCATIONS WHERE WEAR WAS OBSERVED WERE LOOSE OR PRESSED TOGETHER SO THE SHOULDER OF THE OUTER ROLLER ASSY WAS FLUSH WITH THE INNER BEARING CAUSING THE SHOULDER TO WEAR THROUGH THE HINGE ATTACH BRACKET. INSPECTED (3) OTHER AIRCRAFT IN THE FLEET AND FOUND SIMILAR WEAR IN THE ABOVE MENTIONED AREAS. MFG SAYS TO INSPECT THESE AREAS EVERY 800 HOURS. SUGGEST THEY BE INSPECTED MORE FREQUENTLY. PART-TIME ON HINGE ATTACH BRACKETS AND ROLLER ASSEMBLIES UNKNOWN. (TC NR 20070124003)

CA070108010	BEECH	PWA	BOLT	CRACKED
1/5/2007	100BEECH	PT6A28	817861018	WING

(CAN) SCHEDULED WING BOLT INSPECTION, NOTED RT UPPER AFT WING BOLT CRACKED ON BOLT HEAD TO

SHANK RADIUS. BOLT REPLACED WITH NEW. (TC NR 20070108010)

CA070108001	BEECH	PWA	LANDING GEAR	INOPERATIVE
1/3/2007	1900C	PT6A65B		NOSE

(CAN) AIRCRAFT EXPERIENCED NO NOSE GEAR. (TC NR 20070108001)

CA070108002	BEECH	PWA	DOWNLOCK SWITCH	MALFUNCTIONED
1/3/2007	1900C	PT6A65B	404EN16	MLG

(CAN) THE AIRCRAFT ORIGINALLY EXPERIENCED A GEAR WARNING SYSTEM FAILURE ON APPROACH. SUBSEQUENTLY, THE DOWNLOCK SWITCHES WERE CLEANED AND LUBRICATED AND THE SYSTEM TESTED SERVICEABLE. THE NEXT FLIGHT HAD A LT MAIN GEAR INDICATION FAILURE, EMERGENCY PROCEDURES WERE FOLLOWED AND THE LT GEAR INDICATION WORKED PRIOR TO TOUCH DOWN. THE AIRCRAFT WAS RETURNED TO MAINTENANCE AND THE LANDING GEAR SYSTEM WAS TROUBLESHOT EXTENSIVELY AND TEST FLOWN EACH TIME WORK WAS CARRIED OUT UNSUCCESSFULLY. THE SNAG ONLY OCCURRED AT HIGHER ALTITUDES OR COLDER TEMPERATURES. THE LT MAIN GEAR SWITCH WAS REPLACED DUE TO SUSPECT WATER PROPAGATION AND FREEZING. THE AIRCRAFT WAS TEST FLOWN AT THE SAME ALTITUDES AND WAS SUCCESSFUL. THE AIRCRAFT HAS SINCE BEEN RETURNED TO SERVICE WITHOUT FURTHER INCIDENT. (TC NR 20070108002)

CA070228006	BEECH	PWA	MOUNT	CHAFED
2/28/2007	1900C	PT6A65B	1299100471	ENGINE

(CAN) DURING ROUTINE MAINTENANCE A BLEED AIR LINE WAS FOUND CHAFING AN ENGINE TRUSS MOUNT TUBE. BLEED AIR LINE PN: 118-910033-93 TRUSS MOUNT PN: 129-910047-17. THE DAMAGE WAS FOUND TO BE WITHIN REPAIRABLE LIMITS IAW THE AIRCRAFT SRM. THE MOUNT WAS REPAIRED BY A QUALIFIED WELDER AND THE AIRCRAFT WAS RELEASED BACK INTO SERVICE. A FLEET CAMPAIGN WAS CONDUCTED AND ONE OTHER AIRCRAFT WAS FOUND WITH THE SAME PROBLEM WITH BOTH INCIDENTS ON THE LT ENGINE TRUSS MOUNT. (TC NR 20070228006)

2007FA0000395	BEECH		BEARING	LACK OF LUBE
4/23/2007	1900D		13685	MLG

WHILE PERFORMING ROUTINE PREVENTATIVE MAINTENANCEON THE RT IB WHEEL AND TIRE ASSEMBLY (TO CHANGE A WORN TIRE) ONE OF THE WHEEL BEARING ROLLERS CAME OUT OF THE OUTER WHEEL BEARING ONCE THE WHEEL BEARING WAS REMOVED FROM THE WHEEL ASSEMBLY. THE WHEEL BEARING CAGE WAS FOUND TO BE DEFORMED WITH ONE PART OF THE CAGE BROKEN ALLOWING THE ROLLER TO FALL OUT. PIECES OF METAL WERE FOUND IN THE BEARING SEAL. THE BEARING APPEARS TO HAVE BEEN OVERHEATED. PROPER LUBRICATION WOULD HAVE PREVENTED THIS BEARING FROM OVERHEATING. IT IS IMPERATIVE THAT EACH OPERATOR BE AWARE THAT THE INSPECTION AND LUBRICATION REQURIEMENT/INTERVAL FOR THE WHEEL BEARINGS MAY BE LESS THAN THE MFG RECOMMENDATIONS BASED ON THE OPERATORS OWN SPECIFIC MISSION PROFILE. (K)

CA070212010	BEECH	PWA	BEARING	DESTROYED
2/1/2007	1900D	PT6A67D		MAIN WHEEL

(CAN) WHEN THE AIRCRAFT LANDED ALL OF PASSENGERS WERE UNLOADED FOR REFUELING. THE CAPTAIN OF THE AIRCRAFT WALKED AROUND THE RT SIDE OF THE AIRCRAFT TO TALK TO THE FUELER AND NOTICED THAT THE RT MAIN GEAR ONLY HAD ONE MAIN WHEEL ASSEMBLY ATTACHED. HE IMMEDIATELY CONTACTED MAINTENANCE AND GROUNDED THE AIRCRAFT. UPON INSPECTION OF THE AXLE STUB IT WAS FOUND THAT THE INNER RACES OF THE BEARINGS, NUT AND SAFETY HARDWARE WAS STILL ATTACHED. THE OTHER 3 WHEEL ASSEMBLIES WERE REMOVED AND INSPECTED FOR CONDITION AND SECURITY. ONE OF THE 3 HAD BEEN CHANGED BY US ALREADY AND WAS FINE. THE LAST TWO WERE FOUND TO HAVE GREASE COATED ON THE OUTSIDE OF THE BEARINGS BUT NOT (PACKED) INSIDE. NOTE: THE AIRCRAFT IS NEW TO THE COMPANY WITH ONLY 300 TO 400 HOURS OPERATIONAL TIME. THE 3 WHEEL ASSEMBLIES MENTIONED WERE ORIGINAL INSTALLATIONS FROM DELIVERY. ALL BEARINGS WERE CLEANED, INSPECTED AND REPACKED PROPERLY WITH GREASE. THE LOWER SECTION OF THE RT MAIN GEAR ASSEMBLY WAS REPLACED. THE AIRCRAFT WAS RETURNED TO SERVICE WITH NOTHING FURTHER NOTED. (TC NR 20070212010)

CA070305004	BEECH	PWA	WINDSHIELD	FAILED

2/28/2007	1900D	PT6A67D	11438402522	COCKPIT

(CAN) CO-PILOTS WINDSHIELD SHATTERED IN CRUISE. AIRCRAFT DESCENDED IAW ABNORMAL OCCURRENCE CHECKLIST AND BROUGHT CABIN DIFF DOWN TO BELOW 2PSI. AIRCRAFT DESCENDED TO 11000 FT LOWERED CABIN ALTITUDE AT 500 FPM TO 11000FT. PUT CABIN INTO DUMP MODE AND CONTINUED FLIGHT WITHOUT INCIDENT. WINDSHIELD WAS REPLACED WITH IMPROVED PART. (TC NR 20070305004)

CA070308002	BEECH	PWA	COLLINS	WIRE	SHORTED
3/6/2007	1900D	PT6A67D		J176037	NR 2 COMM HEAD

(CAN) FLIGHT CARRIED OUT MAR. 5, 2007, NR 2 COMM DISPLAY WENT BLANK. CONTROL HEAD REPLACED WITH LOANER UNIT, GROUND TESTED OK. NEXT FLIGHT AIRCRAFT TOOK OFF AND UPON ROTATION THE CREW SMELLED SOMETHING BURNING AND SAW SMOKE COMING FROM THE NR 2 COMM CONTROL HEAD. AIRCRAFT RETURNED TO BASE. CONTROL HEAD REMOVED FOR REPAIR AND INVESTIGATION. FOUND WIRE P/N J176037 IN NOSE AVIONICS BAY GOING FROM RELAY J304 TO TRANSCEIVER TRAY WITH CONTINUITY TO GROUND. WIRE REPAIRED AND ORIGINAL CONTROL HEAD INSTALLED AFTER REPAIR, COMM OPERATED FOR 2 HOURS ON THE GROUND WITHOUT FAULT. NO PROBLEMS REPORTED THE SUBSEQUENT FLIGHT. (TC NR 20070308002)

CA061227002	BEECH	PWA	TRANSMITTER	MALFUNCTIONED
12/26/2006	1900D	PT6A67D	1013890235	OIL PRESSURE

(CAN) ENROUTE FROM RT OIL PRESSURE INDICATED 50 PSI. THERE WAS NO CORRESPONDING R LOW ANNUNCIATOR, DECLARED AN EMERGENCY AND PERFORMED A PRECAUTIONARY SHUTDOWN OF THE RT ENGINE. RETURNED WITHOUT INCIDENT. MAINTENANCE TROUBLESHOT INDICATION TO A FAULTY OIL PRESSURE TRANSDUCER. NEW TRANSDUCER INSTALLED, A/C GROUND RUN WITH NO FURTHER INDICATION PROBLEMS (TC NR 20061227002)

CA070123010	BEECH	PWA	SEAL	LEAKING
1/23/2007	1900D	PT6A67D	311145101	NR 2 ENGINE

(CAN) CREW LANDED AND REPORTED ENGINE NR 2 LEAKING OIL. MAINTENANCE INSPECTED AND FOUND THE OIL LEVEL DOWN CONSIDERABLY, THEY INSPECTED THE FWD CHIP DETECTOR, OIL FILTER, FUEL OIL HEATER AND FOUND NO DEFECTS. THE ENGINE WAS GROUND RUN WITH A LITTLE OIL LEAKAGE FOUND. THE OIL BREATHER LINE WAS REMOVED AND THE A/C SENT ON A TEST FLIGHT. WHEN IT RETURNED THE BAG WAS FULL (.5 LTR) WITH SOME SPILLAGE FROM THE BAG .THE A/C WAS GROUNDED AND WITH THE AID OF A MFG ENGINEER, THE REDUCTION GEAR BOX ASSY WAS REMOVED FROM THE ENGINE. CLOSE INSPECTION FOUND THE INTERNAL CARBON SEAL ASSY WITH SLIGHT DAMAGE AND STUCK IN THE OPEN POSITION. AS SOON AS THE SEAL WAS TOUCHED THE SPRING IN THE ASSY CLOSED THE OPENING IN THE SEAL ASSY. A NEW SEAL ASSY HAS BEEN INSTALLED. PRESENTLY WE ARE AWAITING A TEFLON WASHER FOR THE REASSEMBLY OF THE RGB AND THE RGB TO THE ENGINE AND FUTURE ENGINE RUNS. (TC NR 20070123010)

CA070123011	BEECH	PWA	ENGINE	OIL CONSUMPTION
1/12/2006	1900D	PT6A67D	PT6A67D	NR 1

(CAN) CREW NOTED THEIR NR 1 OIL PRESSURE, FLUCTUATING AROUND 75 PSI. THEY RETURNED TO THE GATE AND REPORTED TO MAINTENANCE. INSPECTION OF THE CHIP DETECTOR AND OIL FILTER REVEALED NO FAULTS. THE ENGINE WAS FILLED WITH OIL AND GROUND RUN WITH NO CONSUMPTION OF OIL NOTED. THE OIL BREATHER LINE WAS BAGGED AND THE A/C RAN FOR 30 MINUTES ON THE GROUND UNDER TARGET TORQUE LOADS AND VERY LITTLE CONSUMPTION WAS NOTED. THE A/C WAS SENT ON AN HOUR LONG TEST FLIGHT WHEN IT RETURNED IT WAS APPROX .5 LITER LOWER ON THE OIL LEVEL. SINCE THE OIL LEVEL WAS STILL AT .75 OF A LITER LOW, MAINTENANCE LATER DETERMINED THE ENGINE HAD RETURNED TO ITS NORMAL OIL LEVEL. THE A/C WAS FLOWN ON A COUPLE MORE SHORT HOP ROUTS WITH NO OIL USAGE. A DAILY OIL LEVEL CHECK TO THE INSPECTION SCHEDULE. THE NEXT DAY THE A/C FLEW APPROX 5.2 HRS AND THE CREW NOTED THE OIL LEVEL HAD DROPPED 2.5 LITERS. THE OIL LEVEL WAS TOPPED OFF AND THE AC WAS FERRIED BACK TO A MAINTENANCE BASE. MORE TROUBLESHOOTING WITH THE AID OF MFG IS CURRENTLY UNDERWAY. (TC NR 20070123011)

CA070330005	BEECH	PWA	ENGINE	MAKING METAL
3/26/2007	1900D	PT6A67D		RIGHT

(CAN) PILOTS LOADED PAX DEPARTED THE GATE. AFTER RECEIVING TAXI CLEARANCE THE PILOT NOTICED THE

RIGHT LOW OIL PRESSURE WARNING LIGHT,THE AIRCRAFT WAS TURNED AROUND AND THE ENGINE SHUTDOWN. THE AIRCRAFT RETURNED TO THE GATE AND THE PASSENGERS UNLOADED. THE AIRCRAFT WAS TOWED BACK TO THE MAINTENANCE HANGER AND INSPECTED. WHEN THE OIL FILTER WAS REMOVED THERE WAS A LARGE AMOUNT OF SILVER COLORED MAGNETIC PARTICLES IN THE FILTER. THE ENGINE HAS BEEN REMOVED AND WILL BE SENT BACK TO MFG FOR INSPECTION/OVERHAUL, (TC NR 20070330005)

CA070404001	BEECH	PWA	WINDSHIELD	CRACKED
3/25/2007	1900D	PT6A67D	10138402521	COCKPIT

(CAN) DURING CRUISE FLIGHT THE L/H OUTER WINDSHIELD PANE CRACKED IN SEVERAL PLACES. THE CREW CARRIED OUT THE APPLICABLE PROCEDURES AND LANDED AT THE NEAREST AIRPORT. THE WINDSHIELD WAS INSPECTED BY MAINTENANCE AND THE AIRCRAFT WAS FERRIED TO A MAINTENANCE FACILITY WHERE THE WINDSHIELD WAS REPLACED. THE AIRCRAFT WAS THEN RETURNED TO SERVICE. (TC NR 20070404001)

CA070419003	BEECH	PWA	TORQUE SHAFT	CORRODED
4/18/2007	1900D	PT6A67D	1145240253	RUDDER

(CAN) DURING A PHASE INSPECTION IT WAS DISCOVERED THAT THE RUDDER TORQUE SHAFT WAS CORRODED. IT IS BELIEVED THAT THE CORROSION OCCURRED DUE TO WATER MIGRATION FROM THE VERTICAL STABILIZER. THE TORQUE SHAFT WAS REPLACED. (TC NR 20070419003)

CA060926004	BEECH	PWA	CONTROL CABLE	BROKEN
9/23/2006	1900D	PT6A67D	11452403725	ELEVATOR TRIM

(CAN) CREW REPORTED DIFFICULTY WITH CHANGING THE ELEVATOR TRIM ON APPROACH. MAINTENANCE FOUND THAT THE ELEVATOR TRIM CABLE HAS BROKEN AT THE TRIM SERVO/CAPSTAN LOCATION. THIS SERVO/CAPSTAN COMPONENT IS ONLY INSTALLED ON AUTOPILOT EQUIPPED 1900D`S OF WHICH THERE ONLY VERY FEW. THE CAPSTAN REQUIRES ROUTING OF THE .0625 CABLE. (TC NR 20060926004)

CA070202009	BEECH	PWA	FUEL NOZZLE	CRACKED
1/14/2007	200BEECH	PT642A	311992001	ENGINE

(CAN) DURING ROUTINE FUEL NOZZLE CLEANING AND FLOW TEST IT WAS NOTICED THAT ONE FUEL NOZZLE SHEATH WAS CRACKED FROM THE AIR BLEED SLOT AT A 45 DEGREE ANGLE TOWARDS THE NOZZLE HOLE. THE SHEATH HAD 400 HOURS TIME IN SERVICE SINCE LAST INSPECTION. (TC NR 20070202009)

CA070126010	BEECH	PWA	BEECH	BEARING	DISINTEGRATED
1/23/2007	200BEECH	PT6A41	115555024	206SZZC	COMPRESSOR

(CAN) BEARING WITHIN RT ENGINE AIR CONDITIONING COMPRESSOR DRIVE PULLEY DISINTEGRATED WHICH GREATLY CAUSED FURTHER HARM TO ITS ASSOCIATED PARTS. THE QUILL SHAFT, COMPRESSOR DRIVE PULLEY, COMPRESSOR MOUNT ASSEMBLY, DRIVE SUPPORT, BEARING SHIMS AND SPACER, AND DUAL BELT (COMPRESSOR DRIVE BELT) HAVE HAD IRREVOCABLE DAMAGE. QUILL SHAFT DID NOT SHEAR. (TC NR 20070126010)

CA070122008	BEECH	PWA	DRAG LINK	FAILED
1/20/2007	200BEECH	PT6A41	508103385	RT MLG

(CAN) AFTER SCHEDULED MAINTENANCE THE AIRCRAFT WAS REMOVED FROM THE HANGER AND WAS TOWED TO THE FUEL PUMPS TO BE LEAK CHECKED. AFTER TOWING THE AIRCRAFT ABOUT 500 FEET THE RT MLG COLLAPSED CAUSING DAMAGE TO THE RT MAIN LANDING GEAR AND DOORS, WING TIP, CARGO POD AND ONE BLADE OF THE RT PROP. THE AIRCRAFT WAS THEN LIFTED AND JACKED TO ALLOW INSPECTION OF THE LANDING GEAR AREA AND ALLOWED FOR A TEMPORARY DOWNLOCK TO BE MADE AND THE AIRCRAFT WAS RETURNED TO THE HANGER. THE AIRCRAFT IS STILL BEING INSPECTED FOR OTHER UNSEEN DAMAGE. THE PRELIMINARY FINDINGS SHOW THAT THE PRIMARY FAILURE WAS OF THE DRAG LINK LOCK. THIS IS ONLY A PRELIMINARY REPORT A MORE CONCLUSIVE REPORT WILL BE ADDED TO THIS SDR WHEN THE FINDINGS ARE COMPLETE. (TC NR 20070122008)

CA061229001	BEECH	PWA	MOTOR	UNSERVICEABLE
12/27/2006	200BEECH	PT6A41	1153800025	MLG

(CAN) WHEN LANDING GEAR ONLY EXTENDED HALFWAY. EMERGENCY EXTENSION USED TO EXTEND TO LANDING CONFIGURATION. MOTOR WAS INSTALLED AS AN OVERHAULED UNIT 4.4 HRS PRIOR TO FAILURE. C/B WAS FOUND TRIPPED UNDER CABIN FLOOR. BREAKER RESET AND GEAR CYCLED. MOTOR WAS LABORING TO OPERATE. NEW MOTOR INSTALLED AND GEAR CYCLES CARRIED OUT WITH NO FAULTS FOUND. (TC NR 20061229001)

CA070105006	BEECH	PWA	WINDSHIELD	CRACKED
1/4/2007	200BEECH	PT6A41	10138402523	COCKPIT

(CAN) DURING PRESSURIZED FLIGHT THE LT WINDSHIELD CRACKED IN SEVERAL PLACES ALL ALONG THE IB SECTION OF THE WINDOW. THE WINDOW WAS ORIGINALLY A REPAIRED WINDOW AND WAS INSTALLED FOR 1512.9HRS/1450CYCLES BEFORE FAILING. (TC NR 20070105006)

CA070111018	BEECH	PWA	SHAFT	CRACKED
1/9/2007	200BEECH	PT6A41	5082021811	NLG

(CAN) THE NOSE GEAR ACTUATOR WAS REMOVED TO PERFORM AN END PLAY CHECK. THE NOSE GEAR RETRACT DRIVE SPROCKET AND SHAFT (PN 50-820218-11) ASSEMBLY WAS REMOVED FOR CLEANING. INSPECTION OF THE DRIVE SPROCKET AND SHAFT FOUND THAT A CRACK HAD FORMED ON THE END DIAMETER (.745) THAT ENGAGES THE SUPPORT BEARING. THE CRACK STARTS AT THE END OF THE SHAFT, EXTENDS AXIALLY FOR .350 AND THEN EXTENDS RADIALLY FOR ANOTHER .400. THE CRACK HAS THE APPEARANCE OF STRESS CORROSION. THE TOTAL TIME AND TOTAL CYCLES OF THIS PART IS UNKNOWN. (TC NR 20070111018)

2007FA0000381	BEECH	PWA	EXHAUST DUCT	CRACKED
4/4/2007	200BEECH	PT6A41	02R3022406	RT ENGINE

WHILE PREFORMING SCHEDULED MAINTENANCE, REMOVED LT ENGINE EXHAUST STACK TO FACILITATE INSPECTING THE EXHAUST DUCT. FOUND CRACK FOLLOWING THE CIRCUMFERENCE OF THE SKI SLOPE. THE EXHAUST DUCT HAD SB 3380 COMPLIED WITH 514 HOURS EARLIER.POWER SECTION WAS REMOVED AND SENT FOR REPAIR.

2007FA0000376	BEECH	PWA	EXHAUST DUCT	CRACKED
9/7/2006	200BEECH	PT6A41	02R3022406	RT ENGINE

WHILE PERFORMING SCHEDULED MAINTENANCE,REMOVED LT ENGINE EXHAUST STACK TO FACILITATE INSPECTING THE EXHAUST DUCT. FOUND CRACK FOLLOWING THE CIRCUMFERENCE OF THE SKI SLOPE. THE EXHAUST DUCT HAD PWA SB 3380 COMPLIED WITH 431 HOURS EARLIER. POWER SECTION WAS REMOVED AND SENT FOR REPAIR.

CA070409003	BEECH	PWA	SELECTOR VALVE	LEAKING
4/4/2007	200BEECH	PT6A41	25800	HYD SYSTEM

(CAN) VALVE WAS OVERHAULED BY VENDOR. AFTER OVERHAUL IT WAS INSTALLED IN THE AIRCRAFT. AFTER 2 HOURS OF OPERATION A LEAK DEVELOPED. THE VALVE WAS REMOVED AND DISTRIBUTION MANIFOLD DISASSEMBLED. WHEN CHECKING THE IPC IT WAS NOTED THAT AT OVERHAUL, THE OVERHAUL FACILITY FAILED TO INSTALL 2 O-RINGS. THE O-RINGS WERE INSTALLED AND RE-ASSEMBLED, THE AIRCRAFT GEAR SWING CARRIED OUT SATISFACTORY (TC NR 20070409003)

CA070312010	BEECH	PWA	HONEYWELL	COTTER PIN	MISINSTALLED
3/7/2007	200BEECH	PT6A41			FUEL CONTROL

(CAN) ON DESCENT FROM 21000 FEET, THE RT POWER LEVER WAS PULLED BACK BUT THE ENGINE DID NOT RESPOND TO THE COMMAND. ENGINE WAS THEN SHUTDOWN TO PREVENT OVERTORQUING. ON INSPECTION OF FCU LINKAGES, MECHANICS FOUND THE COTTER PIN GOING THROUGH INPUT SHAFT AFT OF MAX STOP ARM HAD ONLY ONE LEG BENT OVER. OTHER LEG, IN CERTAIN POSITIONS WOULD HANG UP ON MIN STOP SCREW, PREVENTING FCU ARM FROM RETURNING TO IDLE. COTTER PIN WAS PROPERLY SECURED AND AIRCRAFT WAS TEST FLOWN WITH NO FURTHER INCIDENTS. (TC NR 20070312010)

CA070209010	BEECH	PWA	TUBE	FRACTURED
1/3/2007	200BEECH	PT6A41	3027791	FCU P3

(CAN) ON CLIMB, ENGINE POWER REDUCED TO IDLE UNCOMMANDED. THE ENGINE WAS SHUTDOWN IN FLIGHT. INSPECTION REVEALED A FRACTURED FCU P3 DELIVERY TUBE. (TC NR 20070209010)

CA070219006	BEECH	PWA	FCU	FAULTY
2/8/2007	200BEECH	PT6A41	34475523	ENGINE

(CAN) DURING GROUND RUN, RT POWER LEVER FOUND NOT CONTOLLING FCU. INSPECTED THROTLE LEVER LINKAGES AND CABLE TO FCU AND NO FAULTS FOUND. AFTER TROUBLESHOOTING WITH MFG TECH SUPPORT, SUSPECTED FAULTY FUEL CONTROL UNIT. FCU HAS BEEN REPLACED AND FAULT ELIMINATED. (TC NR 20070219006)

CA070404008	BEECH	PWA	CROSS TIE	CRACKED
3/29/2007	300BEECH	PT6A60A	97430000150	BS 187

(CAN) THE STRUCTURAL PIECE CALLED A CROSSTIE P/N 97-430000-150 WAS FOUND CRACKED DURING INSPECTION. IPC / REF: 53-10-20 FIG. 20 ITEM NR 26. THE CRACK IS LOCATED LT SIDE OF AIRCRAFT AT FS 187.383 AND WL 119 (LOWER LONGERON). REPLACED WITH NEW. (TC NR 20070404008)

2007FA0000284	BEECH	PWA	ATTACH FITTING	LOOSE
3/17/2007	300BEECH	PT6A60A	NAS1738B	WING

MANY OF THE BLIND RIVETS, PN NAS1738B6, ATTACHING THE WING SKIN TO THE LOWER FORWARD WING ATTACHMENT FITTING WERE FOUND TO BE LOOSE. CONDITION EXISTED ON BOTH WINGS. CONDITION ALSO FOUND ON AC SN FL59 (8100 HRS). (K)

CA070220007	BEECH	LYC	SHAFT	FRACTURED
2/19/2007	76	LO360A1G6		MLG ACTUATOR

(CAN) MAIN LANDING GEAR ACTUATOR SHAFT FRACTURED AT LAST THREAD FARTHEST FROM ROD END BEARING JAM NUT. SHAFT BENT SLIGHTLY THROUGHOUT ITS FULL LENGTH WITH AN APPROXIMATELY 40 DEGREE BEND AT FRACTURE POINT. (TC NR 20070220007)

CA070129006	BEECH	LYC	CONNECTOR	DISCONNECTED
12/21/2006	76	O360A1G6D		ADF

(CAN) ADF INTERMITTENT NDB AND HEADING. AFTER SWAPPING RECEIVERS, ANTENNA, REPLACING ANTENNA TRAY AND CONNECTOR, REPLACING PINS IN RECEIVER TRAY, FOUND CO-AX CONNECTOR INNNER CORE TOUCHING SHIELDING AT RECEIVER TRAY. SNAG ONLY APPREARED WHEN WIRING HARNESS WAS PULLED ON. SOLDERED PORTION OF CONNECTOR HAD WEAKENED OVER TIME AND COULD NO LONGER SUPPORT THE CO-AX WHICH LED TO THE SHORTING. (TC NR 20070129006)

CA070423007	BEECH	PWA	PROBE	INTERMITTENT
4/18/2007	99	PT6A28	290143	TEMP MONITOR

(CAN) BATTERY TEMP MONITOR WAS INDICATING HIGHER THAN NORMAL ON APPROACH. AIRCRAFT LANDED WITHOUT INCIDENT. BATTERY WAS LUKEWARM TO THE TOUCH. MONITOR WAS UNRESPONSIVE. BATTERY AND PROBE WERE REPLACED ALONG WITH WIRING INSPECTED AND AIRCRAFT RETURNED TO SERVICE. NO FAULTS WERE FOUND DURING DEEP CYCLE OF BATTERY AT BATTERY SHOP. PROBE REPLACED DUE TO POSSIBLE INTERMITTENT OPERATION. (TC NR 20070423007)

CA070416002	BEECH	PWA	PROBE	CRACKED
4/13/2007	99	PT6A28	3034389	ENGINE T5

(CAN) 7 OUT OF 8 T5 INDICATION PROBES WERE FOUND WITH LOOSE OR BROKEN TERMINALS AND MISSING CERAMIC INSULATION. THE PROBES APPEAR TO QUITE FRAGILE IN COMPARISON TO THE OEM PART. THE PARTS IN QUESTION ARE PMA PARTS, THEIR PN 26584. PROBES REPLACED AND AIRCRAFT RETURNED TO SERVICE (TC NR 20070416002)

CA070220002	BEECH	PWA	ENGINE	MAKING METAL
2/12/2007	99	PT6A28		RIGHT

(CAN) CREW CALLED IN ON LANDING TO INFORM MAINTENANCE THAT THE RT CHIP LIGHT HAD ILLUMINATED.

MAINTENANCE FOUND ENGINE HAD METAL IN OIL. ENGINE WAS REPLACED AND AIRCRAFT RETURNED TO SERVICE. THIS ENGINE WILL REQUIRE FURTHER INVESTIGATION AS TO THE CAUSE OF THE MIO. IT IS A LOW TIME POWER SECTION THAT IS ON IT`S SECOND MIO. THE FIRST TIME WAS 183 HOURS AND 341 CYCLES (TC NR 20070220002)

CA070216002	BEECH	PWA	MOTOR	FAILED
2/14/2007	A100	PT6A28	100984040	TE FLAP

(CAN) ON FINAL APPROACH, THE PILOT SELECTED FLAPS DOWN, WHEN THE FLAPS REACHED 5 DEGREES, THE ASSOCIATED CIRCUIT BREAKER POPPED. THE PILOT OVERSHOT TO EVALUATE THE SITUATION AND THEN CARRIED OUT AN UNEVENTFUL LANDING WITH 5 DEGREE OF FLAP. UPON INVESTIGATION BY MAINTENANCE, IT WAS FOUND THAT THE BEARING IN THE FLAP MOTOR HAD FAILED. THE MOTOR WAS REPLACED AND THE AIRCRAFT RETURNED TO SERVICE. AS THE FLAP MOTOR IS NOT CONTROLLED FOR HARD TIME, THE OPERATORS HAVE INDUCED A MANDATORY OVERHAUL OF THE MOTOR AND GEARBOX EVERY 5000 CYCLES. (TC NR 20070216002)

CA061219007	BEECH	PWA	RELAY	FAILED
11/6/2006	A100	PT6A28	1385	OVERVOLTAGE

(CAN) AFTER TAKEOFF ON CLIMB-OUT THE RT GENERATOR CHARGING SYSTEM FAILED. THE AIRCRAFT RETURNED TO BASE. SYSTEM TROUBLESHOOTING CARRIED OUT AND FOUND THE OVER VOLTAGE RELAY HAD FAILED. (TC NR 20061219007)

CA070130003	BEECH	PWA	CONDITION LEVER	CRACKED
1/29/2007	A100	PT6A28	5052456849	CONTROL PEDESTAL

(CAN) PILOTS REPORTED LT FUEL CONDITION LEVER CRACKED HALF WAY DOWN LEVER. AIRCRAFT REMOVED FROM SERVICE. RT CONDITION LEVER INSPECTED AND SHOWED SIGNS OF WEAR. LT AND RT CONDITION LEVERS ON ORDER. (TC NR 20070130003)

CA070123001	BEECH	PWA	CONTROL CABLE	SEPARATED
1/19/2007	A100	PT6A28	9938000521	LT ENGINE

(CAN) THE LT ENGINE COULD NOT BE SHUTDOWN ON THE GROUND USING THE CONDITION LEVER, THE PILOT HAD TO USE THE FIREWALL SHUT-OFF IN ORDER TO SHUT THE ENGINE DOWN. INVESTIGATION BY MAINTENANCE FOUND THAT THE LT IDLE CONTROL CABLE ASSY FAILED AT THE MALE TERMINAL END AT THE ENGINE. THE MALE THREADED END PORTION SLIPPED OFF THE CABLE SLIDE AT THE POINT WHERE IT IS SWAGED/PRESSED ON. (TC NR 20070123001)

2007FA0000266	BEECH	CONT	HINGE BRACKET	CRACKED
3/15/2007	A23	IO346A		STABILATOR

UPON REMOVAL OF THE HORIZONTAL STABILATOR FOR BEARING REPLACEMENT, A CRACK WAS NOTED COMING OUT FROM UNDER THE LEFT HINGE BRACKET THAT IS RIVETED TO THE SPAR OF THE HORIZONTAL STABILATOR. (K)

2007FA0000393	BEECH	LYC	OIL COOLER	CRACKED
4/9/2007	A60	TIO541E1C4	LW10025	LT ENGINE

ON APRIL 9, 2007, MADE A PRECAUTIONARY LANDING, AL (TCL) DUE TO LOW OIL PRESSURE ON THE LEFT ENGINE. MAINTENANCE PERSONNEL REPORTED THAT THE OIL COOLER HAD FAILED DUE TO CRACKS, THE OIL LEVEL WAS DOWN (4) QUARTS, AND THE OIL FILTER WAS INSPECTED WITH NO CONTAMINATION FOUND. ENGINE MAINTENANCE LOG RESEARCH SHOWED THE FAILED OIL COOLER WAS OVERHAULED AND INSTALLED BY FIREWALL FORWARD. THE COOLER WAS REPLACED WITH A NEW PART ON 4/13/2007 AT 1770.6 HOBBS. THE FAILED OIL COOLER HAD 142.1 HOURS SINCE OVERHAUL. NO DETERMINATION COULD BE MADE OF OIL COOLER TOTAL TIME. (K)

CA070206002	BEECH	GARRTT	LANDING GEAR	UNKNOWN
2/5/2007	B100	TPE3316252B		MAINS

(CAN) LANDING GEAR (IN TRANSIT) LIGHT STAYED ON AFTER GEAR UP SELECTION AFTER TAKEOFF. GEAR DOWN

SELECTED AND GEAR WENT DOWN AND LOCKED NORMALLY (3 GREEN LIGHTS) FOR LANDING BACK TO DEPARTURE AIRPORT. AIRCRAFT JACKED, RETRACTIONS DONE, LANDING GEARS INSPECTED, CLEANED AND LUBED, NO DEFAULT FOUND, SYSTEM FOUND SERVICEABLE. (TC NR 20070206002)

CA070208002	BEECH	GARRTT	WINDOW	DEPARTED
1/28/2007	B100	TPE3316252B	50420066137	COCKPIT

(CAN) AFTER TAKEOFF AND CLIMB TO APPROXIMATELY 10,000 FEET, THE LT. (TC NR 20070208002)

CA061218009	BEECH	GARRTT	TORQUE TUBE	CRACKED
12/15/2006	B100	TPE3316252B	1156100103	ELEVATOR

(CAN) DURING COMPLIANCE WITH SB 2145, CHANGED OUT THE DUE TORQUE TUBES AND REPLACE THEM WITH INSPECTED ONES. WHEN THE LT WAS REMOVED A CRACK WAS NOTED GOING FROM THE TAPER PIN HOLE TO THE EDGE OF THE TORQUE TUBE MOUNT BRACKET. IT APPEARS THAT THE PIN WAS OVER-TORQUED DURING ASSEMBLY LEADING TO THE CRACK. (TC NR 20061218009)

CA061218011	BEECH	GARRTT	TORQUE TUBE	CRACKED
12/15/2006	B100	TPE3316252B	1156100103	ELEVATOR

(CAN) DURING COMPLIANCE WITH SB 2145 (REMOVED THE DUE TUBES TO SEND OUT FOR NDT AND REPLACE WITH INSPECTED SERVICEABLE ONES), A CRACK WAS DISCOVERED RADIATING FROM ONE OF THE TAPER PIN HOLES TO THE EDGE OF THE ATTACH BOSS ON THE LT TUBE. IT APPEARS THAT THE TAPER PIN WAS OVERTORQUED DURING ASSEMBLY CAUSING THE CRACK. THE TUBE HAS BEEN SCRAPPED. (TC NR 20061218011)

2007FA0000354	BEECH	PWA	CONNECTOR	CORRODED
4/2/2007	B200	PT6*	MS24266R12B12SN	FIRE DETECTION

THE AIRCRAFT WAS FLYING THROUGH IMC, WITH ALOT OF RAIN ON THEIR WAY TO DESTINATION. AS THE CREW WAS LETTING DOWN TO LAND THE LT ENGINE FIRE LIGHT LIT UP. THE CREW SCANNED ALL THE GAGES, AND DETERMINED THAT THIS WAS A FALSE LIGHT. THE AC LANDED WITHOUT COMPLICATION. UPON INSPECTION OF THE LT ENGINE FIRE DETECT SYSTEM, THE TECH FOUND SOME VERY LIGHT CORROSION AND MOISTURE ON THE J102 CONNECTOR PLUG, LOCATED ON THE LT ENGINE FIRE WALL. THE MOISTURE AND CORROSION WAS REMOVED AND THE FIRE DETECT SYSTEM TESTED PROPERLY, THE AC WAS RETURNED TO SERVICE. APPLING A THIN COATING OF DC-4 GREASE IN THE CONNECTOR PLUG WOULD PREVENT MOISTURE FROM ENTERING THE PLUG AND THEREFORE KEEP THE CORROSION OUT. (K)

CA070329008	BEECH	PWA	TORQUE KNEE	WORN
3/27/2007	B200	PT642A	1018100327	MLG

(CAN) WHILE TAXING BACK TO THE RAMP, THE PILOT NOTICED THAT THE STEERING WAS MORE DIFFICULT AND INEFFECTIVE. HE SHUTDOWN BOTH ENGINES AND ON INVESTIGATION FOUND THE LT LANDING GEAR TORQUE KNEE BOLT DISCONNECTED. THE CAUSE OF THE DISCONNECTION WAS A WORN OUT RETAINING WASHER. MAINTENANCE REPLACED THE WASHER AND RETURNED THE AIRCRAFT TO SERVICE. THIS AREA WAS RECENTLY INSPECTED. THE MM DOES NOT SPECIFY DISASSEMBLING THIS AREA TO INSPECT. THE ONLY WAY THIS COULD HAVE BEEN DETECTED WAS BY DISASSEMBLY. OUR MAINTENANCE PROGRAM TRACKING SHEETS HAVE BEEN AMENDED TO INCLUDE DISASSEMBLY OF THE TORQUE KNEES EACH 800 HOURS. (TC NR 20070329008)

CA070122010	BEECH	PWA	CONTROL PANEL	SHORTED
1/6/2007	B200	PT642A	1003641621	COCKPIT LIGHTS

(CAN) CREW REPORTED COCKPIT OVERHEAD PANEL LIGHTS CIRCUIT BREAKER POPPED AND ABOUT THE SAME TIME REPORTED SMELLING SMOKE. PCB PANEL REMOVED AND FOUND TO OF SHORTED OUT CAUSING SMALL BURN HOLE THROUGH PANEL SCORCHING METAL BEHIND PANEL. CAUSE OF SHORT BELIVED TO BE MOISTURE FROM EXCESSIVE CONDENSATION. (TC NR 20070122010)

CA070114003	BEECH	PWA	INDICATOR	MALFUNCTIONED
1/4/2007	B200	PT642A	066311400	WEATHER RADAR

(CAN) CREW REPORTS THAT IN CRUISE NOTED THE WEATHER RADAR FAILED AND IMMEDIATELY BOTH MAIN GENERATOR BUSES FAILED. CREWS RESET GENERATORS AND MONITORED BUS VOLTAGES AND LOADS,

NORMAL. CREW THEN NOTED THE 28VDC CIRCUIT BREAKER POPPED ON THE AVIONICS BUS FOR THE WEATHER RADAR. BREAKER RESET BUT INDICATOR UNSERVICEABLE. AFTER AIRCRAFT RETURNED TO MTC BASE, MAINTENANCE CREW INSPECTED ELECTRICAL SYSTEM WITH NO FAULTS FOUND. RADAR INDICTOR REPLACED AND F/C NORMAL. UNSERVICEABLE WEATHER RADAR SENT TO REPAIR FACILITY WITH DETAILS OF INCIDENT AND REQUEST FOR WORK / STRIP REPORT. (TC 20070114003)

CA070207007	BEECH	PWA	LIGHT	INOPERATIVE
2/6/2007	B200	PT642A		CABIN

(CAN) WHILE ON FINAL APPROACH, SMOKE WAS OBSERVED IN COCKPIT COMING FROM THE LOWER LT C/B PANEL. SIDE LIGHT C/B POPPED AND SMOKE STOPPED. LANDING COMPLETED WITHOUT FURTHER INCIDENT. MAINTENANCE WAS CONTACTED AND IN CONVERSATION WITH FLIGHT CREW SMOKE PROBLEM WAS ISOLATED TO EDGE OF PANEL LIGHTING, C/B WAS PULLED AND POWER FUNCTION TEST REVEALED NO FURTHER SMOKE ISSUES. RETURN FLIGHT WITH ESSENTIAL CREW WAS CARRIED OUT. MAINTENANCE STAFF CONFIRMED PROBLEM AND SHORTED PANEL WAS REPAIRED. (TC NR 20070207007)

CA070209011	BEECH	PWA	LINE	FRACTURED
1/18/2007	B200	PT642A	3026779	FUEL SYSTEM

(CAN) ON INSPECTION FOLLOWING A REPORT OF FUEL ODOR IN THE CABIN, THE ENGINE HIGH PRESSURE FUEL DELIVERY TUBE WAS FOUND CRACKED. (TC NR 20070209011)

CA070226010	BEECH	PWA	CONNECTOR	LOOSE
2/25/2007	B200	PT642A		MLG

(CAN) CREW REPORTED THAT THE GEAR INDICATION WOULD NOT INDICATE DOWN AND LOCKED ON APPROACH. MAINTENANCE PERSONNEL LATER CARRIED OUT AIRCRAFT LANDING GEAR SWINGS AND FOUND RT SQUAT SWITCH CONNECTOR PLUG LOOSE ON BULKHEAD. CLEANED, SECURED AND GEAR SWINGS FUNCTION CHECKS CARRIED OUT. NO FAULTS FOUND (TC NR 20070226010)

CA061221003	BEECH	PWA	MOTOR	FAILED
12/18/2006	B200C	PT642A	1153800025	LANDING GEAR

(CAN) DURING FLIGHT THE LANDING GEAR WOULD NOT EXTEND AND AN EMERGENCY WAS DECLARED. A MANUAL GEAR EXTENSION WAS COMPLETED THE (3) GREEN LIGHTS ILLUMINATED AND THE AIRCRAFT LANDED WITHOUT FURTHER INCIDENT. MAINTENANCE INVESTIGATED AND FOUND THAT THE LANDING GEAR MOTOR HAD FAILED. THE MOTOR WAS REPLACED, GEAR SWINGS COMPLETED AND THE AIRCRAFT RETURNED TO SERVICE. THIS MOTOR HAS A 2500 LANDING OVERHAUL INTERVAL AND ONLY HAD 390 LSO. (TC NR 20061221003)

CA070329009	BEECH	PWA	WIRE	CHAFED
3/29/2007	B300	PT6A60A		SHUTOFF VALVE

(CAN) 5 AMP ANNUNCIATOR INDICATION (CB4) POPPED IN FLIGHT AND THE CREW LOST THE GREEN AND WHITE ANNUNCIATOR LIGHTS. THE CREW ATTEMPTED TO RESET THE 5 AMP CIRCUIT BREAKER, BUT COULD NOT BE RESET. PROBLEM WAS IN FOUND ON WIRE PIN D WIRE NR Q62A20 ON THE RT FUEL SHUTOFF VALVE HAD CHAFED TO GROUND ON ONE OF THE SCREWS THAT HOLDS ON THE INSPECTION PANEL ON. DID A REPAIR ON WIRE NR Q62A20 AND THE SYSTEM WAS FUNCTION TESTED NORMAL. (TC NR 20070329009)

CA070423009	BEECH	PWA	CROSS TIE	CRACKED
4/22/2007	B300	PT6A60A	9743000015	FUSELAGE

(CAN) THE INTERIOR WAS REMOVED FOR REFURBISHMENT. MAINTENANCE DISCOVERED A CRACK IN THE CROSS TIE, A STRUCTURAL MEMBER AROUND THE EMERGENCY EXIT ON THE LT SIDE OF THE AIRCRAFT. CONTACTED MFG FOR A REPAIR. (TC NR 20070423009)

CA070226005	BEECH	PWA	PLATE	FAILED
2/8/2007	B300	PT6A60A	1014300327	DOOR

(CAN) DISCOVERED DOOR MAKING NOISE WHEN RAISING OR LOWERING DOOR. INVESTIGATED FOR LOOSE HARDWARE INSIDE DOOR AND DETERMINED PIN AND ROLLER ASSY MIGRATED OUT OF LOWER AFT LATCH ASSY. THE DEFECTIVE PART IN QUESTION IS THE PLATE P/N 101-430032-7. THE PLATE IS THE FIXTURE FOR A PIN P/N

101-430032-9 AND ROLLER P/N 50-430037-7. THESE PARTS (PIN/ROLLER)ARE CONTAINED IN THE PLATE BY MEANS OF STAKING WAS NOT PROPERLY SET WHEN MFG CAUSING THE PIN MIGRATING OUT OF THE PLATE. ALL OTHER PLATES WERE INSPECTED TO ENSURE EACH PLATE`S SECURITY. THESE PLATES/LATCHES ARE CRUCIAL TO THE STRUCTURAL INTEGRITY OF THE DOOR AND FUSELAGE FRAME UNDER PRESSURIZATION LOADS. IPI REFERENCE 52-10-00 PG.16 ITEM 280, 285, 290 ILLUSTRATION SHEET 2 OF 2. (TC NR 20070226005)

CA070212007	BEECH	PWA	TORQUE TUBE	CRACKED
1/29/2007	B99	PT6A27	1155240465	ELEVATOR

(CAN) THE TAIL CONE WAS REMOVED FOR OTHER SCHEDULED MAINTENANCE. IT WAS NOTICED THAT THE ELEVATOR BELLCRANK TORQUE TUBE WAS CRACKED. THE CRACK STARTED AT THE HORN ATTACH TAPER PIN AND SPIRALED AROUND THE TORQUE TUBE APPROX 270 DEGREES. THE ASSEMBLY WAS REPLACED AND AIRCRAFT RETURNED TO SERVICE (TC 20070212007)

CA070423002	BEECH	LYC	CYLINDER	CRACKED
4/23/2007	C23	O360A4K	LW12427	ENGINE

(CAN) CRACK FOUND IN CYLINDER. (TC NR 20070423002)

CA070202015	BEECH	PWA	FIRE DETECTOR	MALFUNCTIONED
2/2/2007	C90A	PT6A21	473275	RT NACELLE

(CAN) DURING A ROUTINE MISSION, THE RT FIRE WARNING ANNUNCIATOR LIGHTS ILLUMINATED. THERE WAS NO VISUAL INDICATION OF FIRE. THE PILOT`S SECURED THE ENGINE IAW PUBLISHED PROCEDURES, ACTIVATED THE FIRE SUPPRESSION SYSTEM AND RETURNED TO THE BASE. MAINTENANCE WAS ABLE TO FAULT THE FIRE DETECTION SYSTEM FWD OF THE RT ENGINE FIREWALL, BUT WERE UNABLE TO PINPOINT THE EXACT CAUSE TO EITHER OF THE UPPER FIRE DETECTORS OR THE CONNECTING HARNESS. BOTH DETECTORS AND THE HARNESS WERE REPLACED. THE ENGINE WAS INSPECTED FOR DAMAGE FROM THE RELEASE OF FIRE SUPPRESSION AGENT. NO DAMAGE WAS EVIDENT. THE FIRE BOTTLE AND SQUIB WERE REPLACED. AIRCRAFT WAS RELEASED INTO SERVICE. (TC NR 20070202015)

CA070202016	BEECH	PWA	GASKET	DAMAGED
2/2/2007	C90A	PT6A21	509215873	RT ENGINE

(CAN) PILOTS NOTICED FUEL (STREAMING) FROM THE RT NACELLE TOP COVER SHORTLY AFTER TAKEOFF. THE AIRCRAFT RETURNED TO BASE WITHOUT INCIDENT. THIS HAPPENED (3) TIMES BEFORE THE PROBLEM WAS CORRECTED. 1ST NOTICE, AFT 86.9 HRS. MAINTENANCE ATTRIBUTED THE EXCESS FUEL FOUND UNDER THE NACELLE COVER TO A PROBABLE FAULTY FUEL VENT CHECK VALVE ATTACHED TO THE FUEL FILLER NECK IN THIS AREA. THIS AREA OF THE AIRCRAFT WAS REINSPECTED DURING SCHEDULED MAINTENANCE AND MINIMAL FUEL WAS NOTICED. 2ND NOTICE - AFT 157.6 HRS. MAINTENANCE CHECKED THE AREA, PLUGGED THE VENT LINES AND FILLED THE FUEL CELL COMPLETELY. NO FAULTS WERE NOTED, SO ANOTHER CHECK VALVE WAS INSTALLED. 3RD NOTICE -- AFT 165.9 HRS. MAINTENANCE REMOVED THE RT NACELLE FUEL CELL COVER AND DISCOVERED AN IMPROPERLY INSTALLED GASKET THAT WAS ABLE TO SEAL SUFFICIENTLY UNDER STATIC FUEL CHECKS. HOWEVER IN FLIGHT MODE, THE NEGATIVE PRESSURE OVER THE NACELLE AREA WAS ENOUGH TO DRAW FUEL OUT OF A FULL FUEL TANK INTO THE CAVITY ON TOP OF THE FUEL CELL COVER AND OUT INTO THE SLIPSTREAM AROUND THE NACELLE COVER. THE GASKET WAS REPLACED. (TC NR 20070202016)

CA070207003	BEECH	PWA	BUCKLE	DAMAGED
2/6/2007	C90A	PT6A21	1101983	CREW SEATBELTS

(CAN) CAMPAIGN NOTICE 010-25-10-011 / FAA SAIB NM-06-29. CREW SEAT BELT ROTARY LATCH IS CONTACED BY THE CONTROL YOKE AND THE POSSIBLITY EXISTS TO RELEASE THE BELT WITH ROTATION OF THE CONTROL YOKE WHEN FUNCTIONAL TEST WAS CARRIED OUT IAW SAIB. (TC NR 20070207003)

CA070209001	BEECH	PWA	BUCKLE	DAMAGED
2/7/2007	C90A	PT6A21	110198301	SEAT BELT ASSY

(CAN) WITH A COCKPIT CREW MEMBER STRAPPED INTO THEIR SEAT WITH THE SEAT FULLY FORWARD, INTERFERENCE BETWEEN THE CONTROL COLUMN YOKE AND THE ROTARY SEAT BELT BUCKLE FINS OCCURS WHEN THE CONTROL YOKE IS PULLED FULLY AFT AND ROTATED. THE POSSIBILITY EXISTS THAT THE SEAT BELT ROTARY BUCKLE COULD BE INADVERTENTLY RELEASED DURING EXTREME FLIGHT CONTROL MOVEMENTS. THIS

CONDITION WAS VERIFIED WHILE PERFORMING THE PROCEDURE AS DESCIBED IN FAA SAIB NM-06-29. A GUARDED BUCKLE WOULD NEGATE THE POSSIBILITY OF ACCIDENTAL RELEASE (TC NR 20070209001)

CA070221003	BEECH	PWA	PACIFICSCIEN	BUCKLE	MALFUNCTIONED
2/5/2007	C90A	PT6A21		1101983	SEAT BELT

(CAN) COMPLIED WITH COMPANY CAMPAIGN NOTICE 010-25-10-011 NM-06-29. THE CREW SEATBELT ROTARY LATCH CAN BE CONTACTED WITH THE CONTROL YOKE WITH THE SEAT FULL FORWARD AND THE YOKE FULL AFT. IT IS POSSIBLE TO UNLATCH THE SEATBELT BY ROTATING THE YOKE AND MAKING CONTACT WITH THE BUCKLE. THE FUNCTION TEST WAS CARRIED OUT IAW THE INSTRUCTIONS GIVEN IN NM-06-29. (TC NR 20070221003)

CA070221004	BEECH	PWA	PACIFICSCIEN	BUCKLE	DAMAGED
2/10/2007	C90A	PT6A21		1101983	SEAT BELT

(CAN) COMPLIED WITH COMPANY CAMPAIGN NOTICE 010-25-10-011, NM-06-29. THE CREW SEATBELT ROTARY LATCH CAN BE CONTACTED WITH THE CONTROL YOKE WITH THE SEAT FULL FORWARD AND THE YOKE FULL AFT. IT IS POSSIBLE TO UNLATCH THE SEATBELT BY ROTATING THE YOKE AND MAKING CONTACT WITH THE BUCKLE. THE FUNCTION TEST WAS CARRIED OUT IAW THE INSTRUCTIONS GIVEN IN NM-06-29. (TC NR 20070221004)

2007FA0000391	BEECH	CONT	MAGNETO	FAILED
4/11/2007	F33A	IO520BA	6310	LEFT

DURING NORMAL FLIGHT, VFR CONDITIONS, LT MAGNETO FAILED TO CONTINUE FIRING. AC LANDED WITHOUT INCIDENT. UPON TROUBLESHOOTING LT MAGNETO FOUND TO ONLY FIRE ON ONE LEAD. MAGNETO REPLACED WITH NEW UNIT. DEFECTIVE MAGNETO FOUND TO HAVE LOOSE PARTS RATTLING INSIDE AFTER REMOVAL FROM ENGINE. MAGNETO NOT DISASSEMBLED DUE TO WARRANTY STATUS OF MAGNETO. (K)

CA070122011	BELL	LYC	COLLECTIVE STICK	RATCHETING
1/22/2007	204B	T5311B	2040011841	MAIN ROTOR

(CAN) PILOT COMPLAINED OF RATCHETING FEEL TO COLLECTIVE CONTROL STICK. AIRCRAFT RETURNED TO BASE. INSPECTION REVEALED THAT THE COLLECTIVE FRICTION SURFACE ROLL PIN WAS WORKING INTERNALLY AND CAUSING THE RATCHETING FEEL. ELBOW WAS REPLACED. (TC NR 20070122011)

CA070126007	BELL		FITTING	CRACKED
1/21/2007	205A1		205030767005	TAIL BOOM

(CAN) DURING AIRFRAME INSPECTION, A CRACK WAS FOUND ON LONGERON P/N 205-030-207-005 UNDER FITTING P/N 205-030-767-005. FITTING REMOVED, INSPECTED FOUND TO BE CRACKED AT AFT SIDE OF BOLT LOCATION. CRACKS IN FITTING P/N 205-030-767-005 NOT FOUND UNTIL REMOVAL OF PART. THIS FITTING IS KNOWN TO CRACK AT THE RIVET HOLE LOCATIONS, BUT IN THIS INSTANCE, IT WAS CRACKED ON THE AFT SIDE OF THE BOLT HOLE LOCATION. LONGERON AND FITTING WERE REPLACED WITH NEW PARTS. (TC# 20070126007)

CA070228005	BELL	LYC	BELL	BLADE	MISSING
9/25/2006	205A1	T5313B		R34665	BLOWER

(CAN) VIBRATION ON OIL COOLER BLOWER, FURTHER INVESTIGATION REVEALED ONE BLADE MISSING. SERVICEABLE OIL COOLER BLOWER INSTALLED, A/C RETURNED TO SERVICE. (TC NR 20070228005)

CA070412004	BELL	LYC	GOVERNOR	DAMAGED
3/30/2007	205A1	T5317A	116085023	ENGINE

(CAN) DURING THE DAILY INSPECTION PERFORMED BY THE ENGINEER, THE SCREW HOLDING THE GOV SERVO LEVER PLATE IN PLACE WAS ENTIRELY BACKED OUT OF THE HOLE. THIS PART HAD BEEN REPLACED, TESTED AND ADJUSTED AT TSN 2346.3 FOR LOOSE SCREWS. THE SCREWS ARE STAKED IN PLACE AND YET WERE STILL ABLE TO BACK OUT. THE GOVENOR WAS SENT FOR REPAIR. THE SCREW MAY POISE A RISK IN JAMMING THE SERVO LEVER. (TC NR 20070412004)

CA061222004	BELL	LYC	NUT	CRACKED
12/4/2006	205B	T5317A	204011116001	MAIN ROTOR HEAD

(CAN) THE ACORN NUTS WERE SENT OUT FOR NDT IAW THE REQUIREMENT OF THE OVERHAUL OF THE M/R HEAD

ASSY. THE NDT SHOP FOUND A CRACK DEVELOPING NEAR THE BASE IN THE TRANSITION AREA OR CURL OF THE DOME AND THE GEAR PART OF THE ACORN NUTS. THE ESTIMATED TIME ON THE ACORN NUTS IS 14698 HOURS IAW M/R HEAD ASSY. (TC NR 20061222004)

CA070223007	BELL			BLADE	DENTED
2/22/2007	206B			206010200133	MAIN ROTOR

(CAN) WHILE IN HANGAR, METAL PIECE OUT OF HANGAR OVERHEAD HEATER FELL ON M/R BLADE AND DENTED THE BLADE. BLADE WAS REMOVED AND SENT FOR INSPECTION. HANGAR STAFF AND MANAGER WERE NOTIFIED AND REQUESTED TO INSPECT ALL OVERHEAD ACCESSORIES INCLUDING HEATERS FOR LOOSE OBJECTS. (TC NR 20070223007)

CA070216007	BELL			SPINDLE	FAILED
9/19/2006	206B			206031554003	RT GEARBOX

(CAN) THE RT TRANSMISSION PYLON SUPPORT SPINDLE FAILED IN-FLIGHT AND AIRCRAFT SUBSEQUENTLY HAD AN UNCONTROLLED COLLISION IN THE WATER. REFERENCE: TRANSPORT SAFETY BOARD OCCURENCE BULLETIN NR A06P0190 (TC NR 20070216007)

CA060913003	BELL	ALLSN	BELL	SKIN	CRACKED
9/12/2006	206B	250C20		80011P12F20	TAILBOOM

(CAN) WHILE CARRYING OUT ASB 206-06-107, FIN WAS REMOVED AND A FIN ATTACHMENT INSERT P/N 80-011-P12F2-0 WAS FOUND CRACKED. AFTER REMOVAL OF THE CRACKED INSERT, THE IB SKIN BELOW WAS FOUND TO HAVE SEVERAL CRACKS PROPAGATING UNDERNEATH THE DOUBLER. THE IB DOUBLER WAS REMOVED AND A TOTAL OF APPROXIMATELY 6 CRACKS WAS FOUND, ONE OF WHICH WAS 3 INCHES IN LENGTH. THE FIN WAS REPLACED. (TC NR 20060913003)

CA070412001	BELL	ALLSN		MOUNT	CRACKED
3/20/2007	206B	250C20		206062102001	ENGINE

(CAN) ON A ROUTINE ENGINE REPLACEMENT, IT WAS FOUND THAT THE LT LOWER ENGINE MOUNT WAS CRACKED AT THE ATTACH POINT. AFTER CLOSER INSPECTION THE MOUNT WAS COMPLETELY SEPARATED FROM THE AIRFRAME. THERE WAS NO INITIAL INDICATION OF A PROBLEM. IT WAS FOUND THAT THERE WAS EXCESSIVE TORQUE ON THE ATTACH BOLT TO THE AIRFRAME. THE ATTACH POINT WAS ALSO CUPPED TO INDICATE THAT THE PROPER PROCEDURE WAS NOT USED TO REMOVE THE ENGINE IE; LOOSENING THE ENGINE MOUNTS FIRST. (TC NR 20070412001)

CA070119002	BELL	ALLSN		GOVERNOR	FAILED
10/19/2006	206B	250C20B		23076061	POWER TURBINE

(CAN) THE GOVERNOR WAS INSTALLED WITH ZERO TSN. GROUND RUNS AND RIGGING WERE CARRIED OUT IAW THE MM WITH NO DIFFICULTIES. THE AIRCRAFT WAS FLOWN AND IT WAS NOTICED BY THE PILOT THAT HE WAS ALWAYS CHASING THE N2 TO KEEP IT WITHIN LIMITS (ERRATIC N2 OPS). THE ERRATIC OPS DID NOT IMPROVE AND SEEMED TO WORSEN. THE AIRCRAFT WAS THEN GROUNDED. THE PT GOVERNOR WAS RETURNED FOR WARRANTY. (TC NR 20070119002)

CA070119008	BELL	ALLSN		FCU	FAILED
10/16/2006	206B	250C20B		23070606	ENGINE

(CAN) THE AIRCRAFT WAS STARTED AND WARMED UP. THE PILOT THEN BEGAN TO SPOOL THE AIRCRAFT UP FROM GROUND IDLE TO FLIGHT IDLE, HOWEVER NOTHING HAPPENED. THIS WAS TRIED A FEW TIMES BUT STILL NO RESPONSE. OTHER TROUBLESHOOTING WAS PERFORMED WITH NO FINDINGS. THE FUEL CONTROL UNIT (FCU) IN QUESTION WAS REMOVED AND AN OVERHAULED UNIT WAS INSTALLED. THE DEFECT WAS RECTIFIED. (TC NR 20070119008)

CA070131004	BELL	ALLSN		BLADES	OUT OF BALANCE
1/22/2007	206B	250C20B		206010200133	MAIN ROTOR

(CAN) COULD NOT ACHEIVE DYNAMIC BALANCE OF A/C. (TC NR 20070131004)

CA070227009	BELL	ALLSN		CONTROL LEVER	STIFF

6/16/2006	206B	250C20B		GOVERNOR

(CAN) LEVER CONTROL LEVER HARD TO MOVE ON A FUNCTIONAL CHECK. (TC NR 20070227009)

CA070227011	BELL	ALLSN	CONTROL LEVER	STIFF
10/23/2006	206B	250C20B	23065123	GOVERNOR

(CAN) ON A FUCTIONAL CHECK OF THE GOVERNOR CONTROL THERE APPEARED THAT THE CONTROL LEVER ON THE GOVERNOR WAS HARD TO MOVE. THIS WAS CONFIRMED AND THE GOVERNOR WAS REMOVED FOR REPAIR. (TC NR 20070227011)

CA070227007	BELL	ALLSN	CONTROL LEVER	STIFF
9/15/2006	206B	250C20B		GOVERNOR

(CAN) THE CONTROL LEVER SHAFT ON THE GOVERNOR WAS FOUND HARD TO MOVE. SO STIFF THAT THE LINEAR ACTUATOR HAD TO WORK HARD TO MAKE IT TO MOVE. (TC NR 20070227007)

CA070306002	BELL	ALLSN	COUPLING	LEAKING
2/26/2007	206B	250C20B	206040118001	GEARBOX

(CAN) C-GELT`S MAIN DRIVESHAFT P/N 206-040-015-103, S/N A-1331, 600 HR INSPECTION AND REPACK C/W FEB 22/07 AT 13635.5 HRS. TEST FLOWN 0.3 HRS, FLEW 7.1 HRS FEB 24 AND 25, ENGINEER FOUND TRANS. SIDE LEAKING GREASE AND COUPLING OVERHEATED. DRIVE SHAFT S/N A-2441 REMOVED FROM AC WITH FRESH 600 HR INSP. AND REPACK INSTALLED ON C-GELT. WHICH FAILED IN 11.7 HRS. WITH THE SAME PROBLEM. DRIVE SHAFT S/N A1331 OVERHAULED WITH NEW INNER GEAR, NEW OUTER COUPLING, NEW O-RINGS, AND GREASE (PN 204-040-755-5 EXP. NOV 2/08) INSTALLED ON YHY, FAILED IN 23 MINUTES FLYING TIME, SAME PROBLEM (TRANSMISSION SIDE) THE SAME TUBE OF GREASE WAS USED FOR ALL THE REPACKS. (TC NR 20070306002)

CA070302004	BELL	ALLSN	CONE SET	FAILED
2/28/2007	206B	250C20B	206010003001	MAIN ROTOR

(CAN) MAIN ROTOR TORQUE CHECK WAS PERFORMED ON M/R MAST NUT BETWEEN 3 TO 8 FLIGHT HOURS IAW THE MM CHAPTER 5, AND MM, SECTION 62-7, PARAGRAPH 5. INITIAL TORQUE CHECK OF MAST NUT TORQUE WAS FOUND BELOW MINIMUM SPECIFIED TORQUE OF 250 FT/LBS, IAW MM. A SUBSEQUENT TORQUE CHECK WAS PERFORMED AFTER SECOND FLIGHT OF 3 HOURS WITH THE SAME RESULTS, MAST NUT TORQUE FALLING BELOW MINIMUM TORQUE VALUE OF 250FT/LBS. UPON VISUAL INSPECTION IN THE AREA OF THE CONE SET TO TRUNNION, IT WAS FOUND THAT ONE OF THE SPLIT CONES HALVES HAD MOVED. THEREFORE DID NOT PROVIDE A TRUE SEAT FOR THE SPLIT CONES TO THE M/R TRUNNION AS CONE SET AND WAS PARTIALLY COCKED. IT IS SUSPECTED THAT EACH OF THE 2 TORQUE CHECK ADJUSTMENTS CAUSED THE CONE HALF TO SHIFT DOWNWARD AND THAT RESULTED IN EACH THE LOWER TORQUE READINGS AFTER FLIGHT. THERE WAS DAMAGE TO ONE HALF OF THE CONE SET AND IT WAS BEYOND LIMITS, INSPECTION OF MAST SPLINES INDICATED THAT THERE WAS NO DAMAGE TO THE LOWER SECOND SET OF MAST SPLINES. CONE SET WAS SCRAPPED AND A NEW CONE SET WAS ORDERED. (TC NR 20070302004)

CA061219004	BELL	ALLSN	GOVERNOR	ERRATIC
11/21/2006	206L	250C20R	23036657	ENGINE

(CAN) HIGH TIME GOVERNOR TSO 1889.2, REMOVED FOR O/H DUE TO ERRATIC RPM REPLACED WITH NEW GOVERNOR PN 23076061 SN HR47346 TSN 0:0 (TC NR 20061219004)

CA061219005	BELL	ALLSN	ACTUATOR	FAILED
11/21/2006	206L	250C20R	718513	ENGINE

(CAN) REMOVED LINEAR ACTUATOR PN 7185-13 SN 0296A DUE TO INTERNAL LOCKING CLIP FALLING OFF. INSTALLED SERVICEABLE USED LINEAR ACTUATOR PN 206-062-721-003 SN 11842. (TC NR 20061219005)

CA070404007	BELL	ALLSN	FUEL CELL	LEAKING
4/4/2007	206L1	250C28	2060636321	LEFT

(CAN) RETURNING FROM A FLIGHT IT WAS NOTED THERE WAS A FUEL ODOR IN THE REAR CABIN. INVESTIGATING DETERMED THE LT FWD FUEL CELL HAD A SMALL LEAK. FUEL CELL WAS CHANGED OUT. (TC NR 20070404007)

CA070105005	BELL	ALLSN	BELL	IMPELLER	CRACKED
1/5/2007	206L1	250C28B		206061432031	OIL COOLER

(CAN) 300 HR NDT FOUND CRACKS IN THE WEB AREA. PART REPLACED. (TC NR 20070105005)

CA070202006	BELL	ALLSN	BELL	DIODE	FAILED
1/24/2007	206L1	250C30P		301265AA	BATTERY RELAY

(CAN) SINCE THE DIODE FAILED, A DIRECT SHORT TO GROUND OCCURED. CAUSING THE BATTERY CIRCUIT WIRING TO BURN OFF ITS SHIELDING AND THE DIODE PIG TAIL FROM X1 TO X2 ON THE RELAY HEATED UP TO THE POINT OF BREAKING, FLAME WAS PRESENT. THE BATTERY SWITCH WAS NOT DAMAGED, NOR WAS THE RELAY. (TC NR 20070202006)

CA070119006	BELL	ALLSN	LUCAS	SPRING	BROKEN
10/13/2006	206L3	250C30P			STARTER-GEN

(CAN) THE STARTER GENERATOR WAS THEN INSTALLED. UPON FIRST GROUND RUN OF THE AIRCRAFT, SPARKS WERE NOTICED TO BE COMING FROM THE BRUSH AREA. THE AIRCRAFT WAS SHUTDOWN, THE STARTER GENERATOR WAS REMOVED. UPON REMOVAL WE HEARD SOMETHING LOOSE/RATTLING AROUND. WE REMOVED THE BRUSH COVER AND FOUND THAT ONE OF THE SPRINGS WHICH HOLD DOWN THE BRUSHES WAS BROKEN OFF AND RATTLING AROUND CAUSING ARCING. THIS STARTER-GENERATOR WAS RETURNED TO FOR FULL WARRANTY AND A NEW UNIT WAS SENT TO US. (TC NR 20070119006)

CA070216001	BELL			HOUSING	DAMAGED
2/14/2007	206L4			206040525101	FUEL SYS

(CAN) BYPASS INDICATOR BORE MISSING ONE 0.062 INCH DIA OIL PASSAGE AT BOTTOM OF BORE BREAKING THROUGH THE SMALLEST RECESSED BORE DIAMETER OF .375 INCH. PICTURE OF PART WITH THE MISSING HOLE ATTACHED. (TC NR 20070216001)

CA070126006	BELL	ALLSN		TAIL BOOM	DAMAGED
1/21/2007	206L4	250C30P		206020113207	VERTICAL FIN

(CAN) UPON CHANGING FORMER P/N 206-020-113-093 ON VERTICAL FIN, DAMAGE/GOUGING DETECTED ON THE IB FIN SKIN WITHIN CLOSE PROXIMITY TO VERTICAL FIN MOUNTING HOLE. IT IS SUSPECTED THAT WHEN ORIGINALLY FITTING THE COWLS THAT THE FORMER WAS TRIMMED AND THAT AT THIS TIME THE DAMAGE OCCURRED. MFG WAS CONTACTED AND AN APPROVED REPAIR WAS PROVIDED AND CARRIED OUT. (TC NR 20070126006)

CA070223005	BELL	PWA	BELL	SPRING	BROKEN
2/20/2007	212	PT6T3		204040608001	TAIL ROTOR

(CAN) ENGINEER CARRYING OUT REQUIREMENTS OF CAMP CODE NR 650121 (INSPECT/LUBE T/R DRIVESHAFT FLEX COUPLING). WHEN DISASSEMBLING THE T/R QUILL OUTPUT COUPLING IN SITU ON THE M/R TRANSMISSION. UPON REMOVAL OF RETAINER AND PLATE, A SMALL SECTION OF SPRING PN 204-040-608-001 FELL INTO THE HAND OF THE ENGINEER. REMAINDER OF SPRING WAS IN CORRECT POSITION. FURTHER DISASSEMBLY OF COUPLING REVEALED DAMAGE TO COUPLING P/N 204-040-603-009. NEW SPRING P/N 204-040-608-001 AND SERVICEABLE COUPLING P/N 204-040-603-009 S/N A12-42482 INSTALLED. COMPLETE COUPLING ASSEMBLY LUBED AND REASSEMBLED IAW CHAPTER 65 OF MM, AND REASSEMBLED ONTO THE M/R TRANSMISSION. (TC NR 20070223005)

CA070228004	BELL	PWA	BELL	SPLICE	CORRODED
10/16/2006	212	PT6T3		212030132037	TAILBOOM

(CAN) SPLICE CORRODED,TAIL BOOM REPLACED, A/C RETURNED TO SERVICE. (TC NR 20070228004)

CA070227015	BELL	PWA		GEARBOX	MAKING METAL
1/26/2007	212	PT6T3B		PT6T3B	REDUCTION GB

(CAN) ENGINE NR 1 CHIP DETECTOR CAUTION LIGHT ILLUMINATED WHILE IN CRUISE FLIGHT AND PILOT RETURNED TO BASE. REDUCTION GEARBOX NR 1 SIDE CHIP DETECTOR FOUND WITH SMALL AMOUNT OF METAL.

CHIP DETECTOR WAS CLEANED AND AIRCRAFT FLEW ANOTHER 2 HOURS BEFORE SECOND CHIP LIGHT AND RETURNED TO BASE. SLIGHTLY MORE METAL FOUND ON PLUG. OIL WAS CHANGED AND AIRCRAFT WAS GROUND RUN 1 MINUTE BEFORE CHIP LIGHT ILLUMINATED. CHIP DETECTOR AND OIL FILTER CONTAINED MASSIVE AMOUNT OF METAL. REDUCTION GEARBOX WAS REPLACED AND SENT TO MFG FOR INVESTIGATION. NO REPORT HAS BEEN ISSUED AS YET. (TC NR 20070227015)

CA070226007	BELL	PWA	SADDLE	CRACKED
11/3/2006	212	PT6T3B	D2571	SKID TUBE

(CAN) LT SKID SADDLE WAS FOUND CRACKED. (TC NR 20070226007)

CA070129007	BELL		DRIVE SHAFT	BROKEN
1/25/2007	407			TAIL ROTOR

(CAN) THE A/C WAS BEING LANDED TO DROP OFF SKIERS AND REPORTEDLY HAD A T/R DRIVE SHAFT BREAK BETWEEN THE ENGINE AND THE OIL COOLER. THE A/C WAS LANDED WITHOUT DAMAGE. THERE WAS NO INDICATION OF A T/R STRIKE. (TC NR 20070129007)

CA070411001	BELL		SEAL	LEAKING
4/9/2007	407		209340265103	FREEWHEEL UNIT

(CAN) TRANSMISSION OIL PRESSURE DROP (2) BARS BELOW THE GREEN. ON ROUTE BACK TO BASE THE TRANSMISSION OIL LOW PRESSURE LIGHT CAME ON UPON LANDING. THE ENGINE DECK IS COVERED WITH OIL. THE FREEWHEEL AFT SEAL HAD POPPED OUT OF ITS BORE, RESULTING IN A LOSS OF OIL. (TC NR 20070411001)

CA060914002	BELL	BELL	STRUCTURE	CRACKED
9/6/2006	407			TAILBOOM

(CAN) APPROX. 8 IN. CRACK FOUND IN TAILBOOM NEAR THE 5TH HANGER BEARING APPROX. 270 HRS REMAINING OUT OF THE 5000 HRS RETIREMENT LIFE. (TC NR 20060914002)

CA060913005	BELL		SUPPORT	OBSTRUCTED
9/11/2006	412		212030041233	OIL COOLER

(CAN) SUPPORT 212-030-041-233 FOULS WITH TRANSMISSON OIL LINE 212-040-229-001. (TC NR 20060913005)

CA061221004	BELL		AUTOPILOT SYS	MALFUNCTIONED
12/18/2006	412EP			

(CAN) DURING AN APPROACH TO RUNWAY 24 RIGHT AT THE MFG PLANT, BOTH AUTO-PILOTS WENT OFF LINE. THE MASTER CAUTION LIGHTS WERE OFF ON THE AUTO-PILOTS. A/C WAS ABLE TO LAND. (TC NR 20061221004)

CA061218016	BELL		HOSE	CHAFED
11/8/2006	427		70060T000X186	HYD SYSTEM

(CAN) HOSE ASSEMBLY 70-060T000X186 (18.750 INCHES LONG) RUBS AGAINST SUPPORT 427-001-005 WHEN THE COLLECTIVE STICK IS DOWN AND THE CYCLIC STICK IS CENTER AND FULL FORWARD. (TC NR 20061218016)

CA070216006	BELL	BELL	GEARBOX	CRACKED
2/7/2007	427			MAIN ROTOR

(CAN) FOUND A CRACK IN MAIN ROTOR TRANSMISSION, ON THE LT SIDE INPUT SHAFT. OIL STARTED TO SIP OUT OF THE TRANSMISSION. (TC NR 20070216006)

CA070209008	BELL	PWC	ENGINE	OVERSPEED
1/11/2007	427	PW207D		

(CAN) THE ENGINE WENT TO AN OVERSPEED CONDITION ON TAKE-OFF AND THE TAKE-OFF WAS ABORTED. MFG WILL INVESTIGATE THE INCIDENT AND ADVISE OF ROOT CAUSE ONCE ESTABLISHED. (TC NR 20070209008)

CA070419004	BELL	LYC	BEARING	MAKING METAL
4/19/2007	47G2	VO435A1D	476206297	TAIL ROTOR GB

(CAN) DURING ROUTINE 100 HR INSPECTION THE OIL WAS FOUND TO BE DARKER IN COLOR THAN NORMAL, AFTER CLOSER INSPECTION AND CHECKING FOR STEEL WITH A MAGNET THE DARKNESS IN COLOR WAS ATTRIBUTED TO METAL CONTAMINATION IN THE OIL SO FINE THAT IT LOOKED LIKE METALLIC PAINT. THE GEARBOX IS IN FOR TEARDOWN AND WILL ADVISE THE FINDINGS AFTER INSPECTION. (TC NR 20070419004)

CA070126003	BNORM	LYC	MAGNETO	LOOSE
7/5/2006	BN2A	O540E4C5	BL3493704	ENGINE

(CAN) ROUGH RUNNING ON RUNUP. FOUND ATTACHMENT FLANGE ON MAGNETO LOOSE. (TC NR 20070126003)

CA070126004	BNORM	LYC	OIL COOLER	CRACKED
8/31/2006	BN2A	O540E4C5	8406E	

(CAN) OIL LEAK AROUND CASTING PORT ON THE OIL COOLER ASSEMBLY. (TC NR 20070126004)

CA070213003	BOEING	PWA	CONTACT	BURNED
2/6/2007	727223	JT8D15	50086003	GENERATOR

(CAN) DURING CLIMB OUT ALL 4 CB`S POPPED FOR TANK 2 FUEL BOOST PUMPS, AIRCRAFT RETURNED TO AIRPORT. DETERMINED NR 3 GENERATOR VOLTAGE FLUCTUATING, (THE PUMP FAULT WAS ATTRIBUTED TO THE POWER FLUCTUATION WHICH WAS POWERING THE (ESSENTIAL POWER) AND THE (SYNC BUSS POWERING THESE PUMPS). INSPECTION OF NR 3 GENERATOR CB FOUND BURNED CONTACTS. CB REPLACED, CONTACTS CLEANED NO FURTHER REPORTS. (TC NR 20070213003)

CA070202003	BOEING	PWA	SEAL	FAILED
1/16/2007	727225	JT8D15A		

(CAN) DURING CRUISE AT FL320, CABIN RATE STARTED TO CLIMB AT 1500 FPM. CREW (CARGO FIT) DONED O2 MASKS. PRESSURIZATION CONTROLLER SELECTED TO (MANUAL) AND (STBY), NO CHANGE. CARGO HEAT OUTFLOW VALVE CLOSED, RECOVERED PRESSURE. O2 REMOVED, FLIGHT CONTINUED WITHOUT FURTHER INCIDENT. MAINTENANCE CLEANED DOOR SEALS OF DEBRIS AND CARRIED OUT PRESSURIZATION CONTROL TEST IAW MM 21-31-00 AND FOUND SERVICEABLE. (TC NR 20070202003)

CA070202004	BOEING	PWA	WIRE	SHORTED
1/17/2007	727225	JT8D15A	W27260718	FIRE DETECTION

(CAN) DURING CLIMB AT FL120, APU FIRE LIGHT AND BELL ILLUMINATED. APU FIRE DRILL CARRIED OUT, REMAINED (ON). DECLARED EMERGENCY, RETURNED TO AIRPORT WITHOUT INCIDENT. UPON INSPECTION NO FIRE DETECTED. MAINTENANCE FOUND (FIRE WARNING) WIRE NR W272-607-18 SHORTED TO GROUND. WIRE REPLACED, FUNCTIONED CHECKED SERVICEABLE IAW MM 26-15-01. (TC NR 20070202004)

CA070202005	BOEING	PWA	DUCT	MISSING
1/30/2007	727225	JT8D15A		ENGINE COWLING

(CAN) UPON ARRIVAL, MAINTENANCE NOTICED AN APPROXIMATELY 6 INCH HOLE IN NR 1 ENGINE COWL. FURTHER INVESTIGATION DETERMINED THE CAP ON THE 6TH STAGE SADDLE DUCT MISSING, LOCATED IN COWL. CAP INSTALLED AND SECURED IAW MM AND COWL REPAIRED. (TC NR 20070202005)

CA070119011	BOEING	PWA	BOLT	SHEARED
1/16/2007	727227	JT8D9A	69634801	TRUNION

(CAN) DURING A ROUTINE (C) CHECK INSPECTION, IT WAS NOTICED THAT THE LT MAIN LANDING GEAR TRUNION BOLT P/N 69-63480-1 APPEARED TO BE SHEARED. UPON REMOVAL OF THE GEAR, IT WAS CONFIRME4D THAT THE BOLT WAS SHEARED AND ALSO THE BEARING P/N 10-61849-10 WAS CRACKED. THE ABOVE PN ARE WITH REFERENCE TO MFG IPC 32-10-00-01 P.4 ITEM 317. (TC NR 20070119011)

CA070205007	BOEING	PWA	GEARBOX	FAILED
1/30/2007	727227	JT8D9A	651948218	HORIZONTAL STAB

(CAN) AFTER DEPARTURE, CREW EXPERIENCED STAB TRIM FAILURE. A/C RETURNED TO AIRPORT WITHOUT INCIDENT. MAINTENANCE CREWS FOUND THE STAB TRIM GEARBOX TO BE QUITE STIFF TO OPERATE AND REPLACED IT. A/C RETURNED TO SERVICE. THE STAB TRIM GEARBOX AND JACKSCREW WERE INSPECTED AND

LUBED ON A 2A CHECK NOV 19/2006. (TC NR 20070205007)

CA070413002	BOEING	PWA	CYLINDER	FAILED
4/9/2007	727233	JT8D15	69141061	NLG

(CAN) THE CREW OBSERVED AN A SYSTEM DEPLETION CONDITION AFTER EXTENDING THE LANDING GEAR. THE AIRCRAFT LANDED WITHOUT FURTHER PROBLEM. MAINTENANCE FOUND THE NOSE LANDING GEAR SYSTEM TRANSFER CYLINDER HAD FAILED. THE CYLINDER HAD FAILED AT THE LAST END CAP THREAD. THE UNIT WAS REPLACED AND THE AIRCRAFT RETURNED TO SERVICE. (TC NR 20070413002)

CA070404006	BOEING	PWA	SWITCH	MALFUNCTIONED
3/29/2007	727243	JT8D9A	H1010262	NR 3 KRUGER

(CAN) ON FLAP RETRACTION THE CREW NOTICED THE NR 3 KRUGER FLAP INDICATED (IN TRANSIT). CREW RETURNED TO BASE. NR 3 KRUGER FLAP RETRACT SWITCH WAS REPLACED AND A/C RETURNED TO SERVICE. (TC NR 20070404006)

CA070125006	BOEING	PWA	ENGINE	LEAKING
1/23/2007	727243	JT8D9A		NR 3

(CAN) ENROUTE, NR 3 ENGINE OIL LOSS, AIRCRAFT DIVERTED. INSPECTED AND FERRIED AIRCRAFT. ENGINE REPLACED (TC NR 20070125006)

CA070305001	BOEING	BOEING	O-RING	FAILED
3/3/2007	727247		NAS1611130	DIRVE MOTOR

(CAN) AIRCRAFT EXPERIENCED LOW PRESSURE WARNING LIGHT FROM THE (A) HYD SYSTEM. DUE TO WEATHER THE CREW DECIDED THAT A RETURN TO DEPARTURE POINT WOULD BE THE BEST OPTION. THE CREW DECLARED AN EMERGENCY AND RETURNED WHERE THEY HAD A SAFE LANDING AND THE AIRCRAFT WAS TOWED OFF THE RUNWAY TO THE RAMP. MAINTENANCE INSPECTED THE AIRCRAFT AND FOUND THAT THE OB FLAP DRIVE HYD MOTOR WAS LEAKING HYD FLUID FROM THE CASE DRAIN TUBE. DUE TO WEATHER THE OB FLAP DRIVE HYD MOTOR WAS REPLACED THE NEXT DAY. SYSTEM WAS SERVICED AND THE SYSTEM WAS LEAK AND FUNCTION TESTED SERVICEABLE. THE AIRCRAFT DEPARTED ON MAR.3, 2007 WITH NO FURTHER FAULTS. (TC NR 20070305001)

CA070221007	BOEING	HYDROFLOW	COUPLER	LEAKING
2/20/2007	737*		14C3308	FS 967 S23R

(CAN) ALMOST AN HOUR INTO THE FIRST FLIGHT OF THE DAY, AIRCRAFT EXPERIENCED AUTOMATIC PRESSURIZATION FAULT WITH (AUTO-FAIL) LIGHT ON (WITH BOTH CPC`S FAIL). CREW RESORT TO MANUAL PRESSURIZATION CONTROL. AIRCRAFT ADVISED TO DIVERT TO MAIN BASE FOR RECTIFICATION. UPON INVESTIGATION THE AFT OUT FLOW VALVE FOUND BLOCKED WITH ICE AND WATER SYSTEM QUANTITY LOW. THIS WAS THE SECOND SIMILAR INCIDENT ON THIS AIRCRAFT. FURTHER INVESTIGATION REVEALED WATER LEAKING FROM THE COUPLING (SIMILAR TO COUPLING) AT THE FITTING RT ABOVE THE AFT OUTFLOW VALVE. (SIMILAR TO PREVIOUS FINDING). FITTING/LINES RE-ALIGNED TO RELIEVE POSSIBLE STRESS ON COUPLING. COUPLING TIGHTENED AND RESECURED WITH NEW PACKING. NO FURTHER LEAKS AND AIRPLANE RETURNED TO SERVICE. (OTHER INFORMATION - OVER NIGHT TEMPERATURES WERE BELOW ZERO AND GATE HEATING WAS ON AIRPLANE OVER-NIGHT) (TC NR 20070221007)

CA070306003	BOEING	PWA	ACM	ODOR
3/8/2007	737210C	JT8D9A	20405010	LEFT

(CAN) SHORTLY AFTER DERPARTING, A SMOKE SMELL/HAZE WAS NOTICED IN THE CABIN AREA. THE AIRCRAFT RETURNED TO POINT OF DEPARTURE AND LANDED WITHOUT FURTHER PROBLEM. THE CREW ADVISED MAINTENANCE THEY SUSPECTED THE LT PACK. THE SMOKE SMELL SOURCE WAS VERIFIED AS THE THE LT AIR CYCLE MACHINE. THE AIRCRAFT WAS RELEASED UNDER THE MEL. THE AIR CYCLE MACHINE WAS REPLACED THE FOLLOWING DAY. (TC NR 20070306003)

CA070312003	BOEING	GE	STARTER	FAILED
3/12/2007	73735B	CFM563B1	360581217	APU

(CAN) APU SHUTDOWN ON ITS OWN AND WOULD NOT RE-START. NEW STARTER INSTALLED. NEW STARTER BLEW APART ON FIRST START ATTEMPT. SECOND STARTER INSTALLED AND OPERATED SERVICEABLE. (TC NR 20070312003)

CA070226002	BOEING	CFMINT	WINDSCREEN	BROKEN
2/23/2007	737522	CFM563C	5717623133	COCKPIT

(CAN) CAPTAIN`S NR 2 WINDOW OUTER LAYER SHATTERED IN FLIGHT. WINDOW WAS REPLACED AND AIRCRAFT RETURNED TO SERVICE. REPORTED AS AN SDR DUE TO A SUSPECTED RELIABILITY ISSUE WITH SUBJECT WINDOWS. (TC NR 20070226002)

2007FA0000228	BOEING	GE	SENSOR	MALFUNCTIONED
3/6/2007	747230B	CF650*		MLG

DURING TAKEOFF, THE LANDING GEAR HANDLE WILL NOT GO TO UP OR RETRACT POSITION. AIRCRAFT RETURNED TO BASE. PERFORMED TROUBLESHOOTING ON THE LANDING GEAR SYSTEM AND FOUND THAT LT WING GEAR TRUCK ROTATION SENSOR AT FAULT. ADJUSTED THE LT WING GEAR TRUCK ROTATION SENSOR IAW AMM 32-61-04. PERFORMED LANDING GEAR SYSTEM EXTENSION AND RETRACTION SEVERAL TIMES IAW AMM 32-32-00/501, TEST NORMAL. (K)

CA070227002	BOEING	RROYCE	DRIVE UNIT	BURNED
2/25/2007	757236	RB211535E4	20414440406	WX RADAR ANTENNA

(CAN) WXR RADAR DRIVE UNIT FOUND WITH TERMINAL 15 AND 16 BURNED (TC NR 20070227002)

CA070226001	BOEING	RROYCE	HONEYWELL	CONNECTOR	BURNED
2/21/2007	757236	RB211535E437			DRIVE UNIT

(CAN) CREW REPORTED EICAS STATUS MESSAGE, WXR SYSTEM. ON REPLACEMENT OF WXR DRIVE UNIT, FOUND BURNED ELECTRICAL CONNECTORS. (TC NR 20070226001)

CA070404005	BOEING	RROYCE	BOEING	TERMINAL BLOCK	OVERHEATED
4/26/2006	75728A	RB211535E4			WINDOW

(CAN) UNKNOWN ODOR IN CONTROL CABIN THOUGHT TO BE FROM LAVATORY. ISOLATED TO FLIGHT DECK. ON DESCENT INTO AIRPORT, ODOR DISSIPATED AND FAULT COULD NOT BE FOUND. AIRCRAFT CONTINUED WITH NO FUMES BUT SLIGHT ODOR WAS PRESENT AT END OF FLIGHT. TERMINAL BLOCK ON SLIDING WINDOW WAS FOUND OVERHEATED. WINDOW WAS REPLACED. (TC NR 20070404005)

CA060816001	BOEING	PWA	OIL SYSTEM	LOW PRESSURE
8/15/2006	767233	JT9D7R4D		ENGINE

(CAN) ENGINE INFLIGHT SHUTDOWN DO TO OIL PRESSURE AND QUANTITY LOSS, ENROUTE, DIVERTED, SUSPECT NR 4 BEARING. (TC NR 20060816001)

CA070201002	BOEING	PWA	FUEL FILTER	DIRTY
12/18/2006	767300	R985AN14B	218371	

(CAN) ON CLIMB (L ENG FUEL FILT) EICAS MSG. RETURNED TO DEPARTURE. FUEL FILTER INSPECTED AND FOUND DIRTY. (NO DEBRIS) TECH NOTED NOT TO THE EXTENT THAT WOULD CAUSE THE EICAS INDICATION. FILTER REINSTALLED. LT ENG DIFFERENTIAL PRESS SW CONX FND CORRODED. CONX CLEANED NR DIFF PRESS SW REPLACED. CKD SERV ON GRND RUN. REPEAT SNAG ON NEXT T/O. FILTER REPLACED AND CKD SERV ON HIGH PWR GROUND RUN. (TC NR 20070201002)

CA070130004	BOEING	GE	O-RING	LEAKING
1/26/2007	767306	CF680C2B6F		FUEL SYSTEM

(CAN) AC LANDED WITH LOW HYD FLUID IN CENTER SYS FOUND ACMP NR 2 CENTER FILTER MODULE PRESSURE DELTA P POP-UP LEAKING DUE TO A FAILED O-RING. O-RING REPLACED AND HYD SYSTEM SERVICED (37 QTS). (TC NR 20070130004)

CA070312004	BOEING	GE	LINE	FAILED

3/7/2007	767306	CF680C2B6F			POTABLE WATER

(CAN) DURING NORMAL WALK AROUND FOUND WATER LEAKING OUT OF THE BELLY OF THE AIRCRAFT, FORWARD AREA. SUBSEQUENT INVESTIGATION FOUND CLAMSHELL (CLAMP) P/N CA62505-56BL HOLDING POTABLE WATER LINE THAT RUNS OVER FWD. E&E COMPARTMENT TOWARD THE FWD. LAVATORY FAILED RESULTING IN THE TWO EICAS COMPUTERS BEING SOAKED WITH WATER. BOTH COMPUTERS CHANGED, CLAMP REPLACED WITH APPROVED P/N 14C33-08, METAL NOT THE ORIGINAL PLASTIC. (TC NR 20070312004)

2007FA0000350	BOEING	GE	GE	SHAFT	UNSERVICEABLE
4/1/2007	777224	GE9090B		1767M75G03	LPT FAN

AIRCRAFT TAKEOFF WAS ABORTED, A 147 KNOTS AFTER ENGINE LOST POWER. AC WAS STOPPED SAFELY AND ALL PASSENGERS AND CREW DEPLANED SAFELY. UPON INSPECTION OF THE ENGINE, THE FAN ROTATED FREELY, BUT THE LPT DID NOT ROTATE. BS1 OF THE ENGINE SHOWED THAT THE HPT WAS CLEAN, BUT THE LPT WAS HEAVILY DAMAGED. THE ENGINE WAS SHIPPED TO MFG. INITIAL INSPECTIONS SHOWED THAT THE FAN MID SHAFT WAS SEPARATED IN THE AXIAL PLANE OF THE HPC S3 DISC. THE CENTER VENT TUBE WAS SEPARATED IN 3 PLACES ALL AFT OF FMS SEPARATION. AND INVESTIGATION IS ON GOING. (K)

CA061228001	BOLKMS			HOUSING	CRACKED
12/21/2006	BK117A1			10546662	ACTUATOR

(CAN) DURING A ROUTINE DISASSEMBLY TO CORRECT SEAL LEAKAGE A CRACK WAS FOUND AT THE LEE PLUG ON THE FRONT OF THE ACTUATOR. THE CRACK EXTENDS UP TOWARDS THE SERVO VALVE (TC NR 20061228001)

CA070423001	BOLKMS	ALLSN		BEARING	FAILED
4/20/2007	BO105S	250C20B		601741	MAIN ROTOR

(CAN) DURING PERFORMANCE OF A 100/300 HOUR INSPECTION OF THE AIRCRAFT AND IN PARTICULAR THE MAIN ROTOR BLADES. THE ENGINEER FOUND THAT THE PENDULUM ABSORBER OF THE RED MAIN ROTOR BLADE WAS EXTREMELY ROUGH. UPON DISASSEMBLY OF THE PENDULUM ABSORBER IT WAS FOUND THAT THE BEARINGS WERE DRY, WITH NO TRACE OF OIL PRESENT. ONE BEARING CAGE HAD FAILED, AND THE BALL BEARINGS HAD WORN TO WELL BEYOND ANY CIRCULAR SHAPE. JUST A NOTE TO SAY THAT THERE HAD BEEN NO TRACE OF OIL ON THE HEAD IN PREVIOUS INSPECTIONS TO INDICATE A LEAK. ONE BEARING AND SEAL WERE REPLACE, THE ASSEMBLY REASSEMBLED AND INSTALLED ONTO THE ROTOR BLADE. AIRCRAFT RETURNED TO SERVICE UPON COMPLETION OF THE INSPECTION. (TC NR 20070423001)

CA070119005	BOLKMS	ALLSN		SWITCH	SHORTED
1/18/2007	BO105S	250C20B		2840A	ANTI ICE

(CAN) AIRCRAFT IS IN CRUISE FLIGHT WHEN PILOT SELECTED NR 1 AND NR 2 ANTI-ICE (ON) DUE TO THE OAT AND VISIBLE MOISTURE. ON SHORT FINAL TO THE BASE THE PILOT SELECTED BOTH ANTI-ICE SWITCHES TO THE (OFF) POSITION. IMMEDIATELY UPON ACTIVATING NR 1 SWITCH TO (OFF) THE PILOT HEARD AN AUDIBLE (CLICK). LOOKING DOWN HE NOTICED THAT THE NR1 ANTI-ICE 3AMP BREAKER HAD POPPED. ONE UNSUCCESSFUL ATTEMPT WAS MADE TO RESET THE BREAKER. AFTER THE AIRCRAFT HAD SHUTDOWN THE MAINTENANCE STAFF TROUBLESHOT THE SYSTEM AND FOUND THAT THERE WAS A (DEAD SHORT) IN THE ANTI ICE SWITCH P/N 2840A. THE SWITCH WAS REPLACED AND AIRCRAFT WAS RETURNED TO SERVICE. (TC NR 20070119005)

CA070125004	BOLKMS	ALLSN		BEARING	FRACTURED
1/23/2007	BO105S	250C20B		601741	PENDULUM ABSORB

(CAN) UPON LANDING AT THE MAINTENANCE BASE AND FOLLOWING HELICOPTER BEING SHUTDOWN, THE PILOT WAS EXITING AND LEAVING THE AIRCRAFT HE NOTICED THAT THE M/R PENDULUM ABSORBER ON THE YELLOW MAIN ROTOR BLADE WAS IN THE HORIZONTAL POSITION. CLOSER INSPECTION REVEALED THAT WHEN AN ATTEMPT TO ROTATE THE PENDULUM ABSORBER IT WAS EXTREMELY ROUGH AND DIFFICULT TO ROTATE. PENDULUM ABSORBER WAS REMOVED AND DISASSEMBLED, WHERE IT WAS FOUND THAT ONE OF THE BEARINGS HAD A FRACTURED OUTER CASE. THE BEARING APPEARED TO BE DRY, AS NO EVIDENCE OF LUBRICATION WAS FOUND. NEW BEARINGS, SEALS, AND O-RINGS WERE INSTALLED. PENDULUM ABSORBER WAS RE-INSTALLED AND AIRCRAFT NOW RETURNED TO SERVICE. (TC NR 20070125004)

CA070129003	BOMBDR		BFGOODRICH	VALVE	OPEN
1/22/2007	BD7001A10			4E32612	WATER SYSTEM

(CAN) OVER AN HOUR INTO THE FLIGHT, A SPOILER MOMENTARY DEPLOYMENT WITH WING ROLL AFTER SPOILER FAULT CAS OCCURRED. FLIGHT SPOILER FAIL CAS POSTED SHORTLY AFTERWARDS. SEVERAL CABIN SYSTEM MALFUNCTIONS OCCURRING NEXT FOLLOWED BY HAVING NO WATER FROM ANY FAUCET AVAILABLE. A/C LANDED AT FINAL DESTINATION AND SPOILER/STAB IN BIT CAS POSTED. WATER NOTED TO BE DRAINING FROM FORWARD FUSELAGE BELLY SKIN DRAINS WITH WATER TANK QUANTITY SHOWING EMPTY. GALLEY CARPET FOUND WET WITH GALLEY UNDER SINK AREA WET AS WELL. VISUAL INSPECTION OF AVIONICS BAY CARRIED OUT WITH FCU RESET PROCEDURE CARRIED OUT. SPOILER FAIL CAS CLEARED WITH SPOILER/STAB IN BIT ONLY THAT WAS MMEL`D . WATER SYSTEM LEFT EMPTY AND TURNED OFF FOR UNEVENTFUL 15 MINUTE FLIGHT BACK TO HOME BASE. ASSUMPTION MADE OF SUPPLY LINE VENT VALVE INTRODUCING THE WATER INTO THE GALLEY UNDER SINK AREA IN FLIGHT. WATER SYSTEM SERVICED, VISUAL INSPECTIONS AND LEAK CHECKS CARRIED OUT WITH NO DEFECTS NOTED. FCU NR1 SWAPPED, CONFIRMED DEFECTIVE AND REPLACED. CABIN NR4 REPLACED. (TC NR 20070129003)

CA070118007	BOMBDR	RROYCE	PROBE	MALFUNCTIONED
12/7/2006	BD7001A10	BR700710A220	0102AH2AF	TAT

(CAN) DURING CRUISE AT 43,000 FEET, CREW HAD EICAS MESSAGE AIR DATA COMPUTER (ADC) 3 MISCOMPARE ANNUNCIATED FOR 2 MINUTES FOLLOWED MOMENTARILY BY ADC 1 MISCOMPARE AND THEN ADC 2 MISCOMPARE MESSAGES. AFTER THE MESSAGES WENT OUT, COCKPIT INDICATIONS STARTED TO SHOW DECREASING AIR SPEED AND ENGINE PRESSURE RATIO (EPR) WHICH COULD NOT BE MAINTAINED WITH THE THROTTLE LEVERS AT THE MAXIMUM SETTING. A STALL WARNING ANNUNCIATION WAS POSTED ON THE PRIMARY FLIGHT DISPLAYS WITH STICK SHAKER ACTIVATED AND THE CREW BEGAN A DESCENT TO 39,000 FT. AT THAT ALTITUDE, THE ENGINE POWER INDICATIONS RETURNED TO NORMAL ACCOMPANIED WITH HIGHER THAN NORMAL ENGINE VIBRATION (WITHIN ALLOWABLE LIMITS) WHICH REMAINED UNTIL THE A/C DESCENDED TO 5000 FEET DURING THE ARRIVAL. A COPY OF THIS SDR HAS BEEN FORWARDED TO MFG. (TC NR 20070118007)

CA070418001	BOMBDR	RROYCE	POTABLE WATER	LEAKING
4/16/2007	BD7001A10	BR700710A220	4E32612	GALLEY

(CAN) FOLLOWING THE ADVISORY WIRE FROM MFG, THE WATER SYSTEM VENT VALVES (6) WHERE REPLACED IN MFG. ON THE NEXT CUSTOMER FLIGHT, ONE VENT VALVE FROM THE GALLEY HAS STARTED TO LEAK. END RESULT, AVIONICS BAY FLOODED, BLACK BOXES FULL OF WATER. INVESTIGATION SHOWED THAT THE 2 VALVES ARE ACTING REVERSE. AS A TEMPORARY MEASURE, MFG DRAWING NR BAS67038670 INCORPORATED. (REMOVED VENT VALVES AND INSTALLED PLUGS) (TC NR 20070418001)

CA070416006	BOMBDR	PWC	CONTROL UNIT	MALFUNCTIONED
3/15/2007	DHC8400	PW150A	C1486742003	TE FLAPS

(CAN) ENROUTE BASE, THE FLAP POWER CAUTION LIGHT ILLUMINATED. RESET WAS CARRIED OUT IAW QRH 10.11 HOWEVER ONE MINUTE LATER THE CAUTION LIGHT RE-ILLUMINATED. IAW THE QRH FLAPS RENDERED UNAVAILABLE FOR LANDING. FLAPLESS LANDING WAS CARRIED OUT WITHOUT INCIDENT. ENGINEERING INVESTIGATION REVEALED FAILURE OF THE FLAP CONTROL UNIT. UNIT REPLACED AND TESTED IAW MAINTENANCE MANUAL REQUIREMENTS. AIRCRAFT RETURNED TO SERVICE WITHOUT FURTHER INCIDENT. AS DEFECT CONFIRMED WITH REPLACEMENT OF THE FCU. (TC NR 20070416006)

CA070416003	BOMBDR	PWC	WIRE HARNESS	DAMAGED
4/15/2007	DHC8400	PW150A	471515	NLG

(CAN) AFTER T/O LANDING GEAR WOULD NOT RETRACT WHEN SELECTED. A/C RETURNED TO BASE FOR MAINTENANCE INSPECTION. HARNESS WOW NR 2 REPLACED IAW AMM. A/C RTS (TC NR 20070416003)

CA070416004	BOMBDR	PWC	CONTROL UNIT	FAILED
4/13/2007	DHC8400	PW150A	699018002	NR 2 PROP

(CAN) CREW COMPLETED A NR 2 ENGINE SHUTDOWN MANUALLY (IFSD) DUE POWERPLANT MESSAGE AND PEC CAUTION. MAINT ARRIVED AND FC 161 CH A AND B. FIM TASK PERFORMED. NO CONTACT WITH MPU AND BUSS BARS. REMOVED & REPLACED PEC. (TC NR 20070416004)

CA070412005	BOMBDR	PWC	HOSE	CUT
4/7/2007	DHC8400	PW150A	B030302104C94	INSTRUMENT PANEL

(CAN) CREW REPORTED THAT THE INTEGRATED STANDBY ELECTRONIC INSTRUMENT WAS NOT READING THE SAME AS THE PRIMARY FLYING DISPLAYS. INVESTIGATION REVEALED THAT THE LINES TO THE INSTRUMENT HAVE TO BE REMOVED TO PERFORM AD CF2005-15 PART B. ON REASSEMBLY IF THE LINES ARE NOT ORIENTED PROPERLY THAT WILL CHAFE ON STRUCTURE. (TC NR 20070412005)

CA070402001	BOMBDR	PWC	CONTROL UNIT	MALFUNCTIONED
3/29/2007	DHC8400	PW150A	666000459	NR 2 PROPELLER

(CAN) DURING LEVEL FLIGHT FL. 250, ENGINE NR 2 PROPELLER SPEED WENT TO 1051 RPM, FOLLOWED BY POWERPLANT ON ED. THIS CASE WAS TREATED AS AN OVERSPEED AND QRH CONSULTED, ENDING UP WITH ENGINE SHUTDOWN, ON NR 2 ENGINE. EMERGENCY DECLEARED AND A NORMAL DESCENT TOWARDS BASE WAS INITIATED. LANDING PERFORMED AND TAXI TO REMOTE GATE WAS DONE. MAINTENANCE ARRIVED AND FOUND FAULT CODE 160 CH A AND B. FIM TASK 61-20-04-810-813 PERFORMED. NO CONTACT WITH MPU AND BUSS BARS. REMOVE AND REPLACED MPU. (TC NR 20070402001)

CA070201003	BOMBDR	PWC	WHEEL	FAILED
2/1/2007	DHC8400	PW150A	31573	NR 3

(CAN) AN AIRCRAFT EXPERIENCED NR 3 WHEEL AND TIRE SEPARATION UPON LANDING DUE TO WHEEL BEARING FAILURE. DETERIORATION OF THE MAIN LANDING GEAR WHEEL BEARINGS, RESULTING IN DAMAGE TO THE WHEEL, AXLE, AND BRAKE UNITS. (TC NR 20070201003)

CA070220005	BOMBDR	PWC	SEQUENCE VALVE	MALFUNCTIONED
2/16/2007	DHC8400	PW150A	483023	NLG

(CAN) ON GEAR EXTENSION GOT 3 GREEN AND DOOR AMBER. TROUBLESHOOTING POINTED TO THE NOSE VALVE SOLENOID SEQUENCE. VALVE REPLACED. (TC NR 20070220005)

CA070213006	BOMBDR	PWC	PROXIMITY SENSOR	MALFUNCTIONED
2/6/2007	DHC8400	PW150A	401020101	RT MLG WOW 1

(CAN) ON TAKEOFF CREW GOT (WT ON WHEELS) CAUTION LIGHT MOMENTARILY. LIGHT CAME ON AGAIN IN FLIGHT, QRH ACTIONED AND RETURN TO BASE. PSEU SHOWED THAT RT MLG WOW 1 SENSOR PROXIMITY SHOWED (UNREASONABLY NEAR). COULD ADJUST OUT SO THAT MILLIHENERYS WERE IN SPEC BUT THE GAP WAS OUT. REPLACED SENSOR PROXIMITY. (TC NR 20070213006)

CA070129008	BOMBDR	PWC	VALVE	FAILED
1/26/2007	DHC8400	PW150A	483023	LT NACELLE

(CAN) CREW REPORTED THAT THE GEAR WENT UP BUT THE LT MAIN LANDING GEAR DOORS REMAINED OPEN. JACKED AIRCRAFT AND PERFORMED A GEAR SWING. GEAR WENT UP BUT THE LT DOORS REMAINED OPEN AFTER SYSTEM WENT TO BYPASS MODE. ON SELECTION OF GEAR DOWN THE LT MAIN GEAR DOORS CLOSED AND THE GEAR CAME DOWN WITH THE LT UPLOCK RELEASING. RETRACTED THE GEAR AND TURNED OFF THE HYDRAULICS. PERFORMED AN ALTERNATE GEAR EXTENSION TO GET THE GEAR DOWN. (TC NR 20070129008)

CA070130002	BRAERO	RROYCE	INDICATOR	INOPERATIVE
1/23/2007	HS7482A	DART5342		AIRSPEED

(CAN) ON TAKEOFF ROLL THE CREW REJECTED THE TAKEOFF AT 85 KTS WITH NO INDICATION ON FIRST OFFICERS SIDE. MAINTENANCE CONDUCTED A PURGE OF THE SYSTEM AND CARRIED OUT A PITOT/STATIC SYSTEM TEST.THE SYSTEM WAS VERIFIED SERVICEABLE AND THE AIRCRAFT RETURNED TO SERVICE. (TC NR 20070130002)

CA070309001	BRAERO	RROYCE	VALVE	MALFUNCTIONED
3/3/2007	HS7482A	DART5342	110BR02	FUEL CROSSFEED

(CAN) AC WAS IN CRUISE FLIGHT, WHEN THE FLIGHT CREW OPENED THE FUEL CROSSFEED VALVE TO BALANCE THE FUEL LOAD. WHEN THE FLIGHT CREW SELECTED THE LT BOOST PUMPS TO OFF, THE NR 1 ENGINE FLAMED OUT. THE FLIGHT CREW FEATHERED ENGINE NR 1. THE PILOT THEN CLOSED THE FUEL CROSSFEED VALVE, SWITCHED THE LT FUEL BOOST PUMPS TO ON AND SUCCESSFULLY RELIT ENGINE NR 1. THE AIRCRAFT CONTINUED WITH OUT FURTHER DIFFICULTY. UPON ARRIVAL, MAINTENANCE BLED THE FUEL SYSTEM, CHECKED

FOR FUEL CONTAMINATION AND EXTENSIVELY GROUND RAN ENGINE NR 1. NO FAULTS WERE FOUND. FURTHER INVESTIGATION HAS DETERMINED HS SB 28/27 WHICH PREVENTS ACCUMULATION OF AIR IN THE CROSSFEED LINE HAS NOT BEEN ACCOMPLISHED ON THIS AIRCRAFT. IT IS BELIEVED AIR IN THE FUEL CROSSFEED LINE CAUSED THIS INFLIGHT FLAME OUT. WE WILL BE ACCOMPLISHING THIS RECOMMENDED SB AS SOON AS POSSIBLE. A FLEET CAMPAIGN OF REMAINING AIRCRAFT HAS DETERMINED THIS SB HAS BEEN PREVIOUSLY ACCOMPLISHED. (TC NR 20070309001)

CA070131008	BRAERO	RROYCE	LINE	LEAKING
1/31/2007	HS7482A	DART5342	373Q2277	HYDRAULIC SYS

(CAN) IN CRUISE FLIGHT (30 MINUTES AFTER DEPARTURE THE FLIGHT CREW OBSERVED NR 1 AND NR 2 LOW HYDRAULIC PRESSURE LIGHTS ILLUMINATED. THE FLIGHT CREW RETURNED TO DEPARTURE, USED ALTERNATE MEANS FOR EXTENDING THE LANDING GEAR AND LANDED UNEVENTFUL. MAINTENANCE FOUND INSUFFICENT FLUID IN THE HYDRAULIC SYSTEM. A LEAK IN HYDRAULIC LINE P/N 373Q2277, CAUSED BY CHAFING WAS FOUND IN THE LT MAIN LANDING GEAR WHEEL WELL. THE LINE WAS REPLACED, SYSTEM BLEED AND FUNCTION CHECKED OK. (TC NR 20070131008)

CA070207004	CESSNA	CONT	VALVE	STUCK
3/3/2006	150H	O200A		CYLINDER

(CAN) STUCK VALVE - ENGINE WAS ROUGH RUNNING. FOUND TO BE A STUCK VALVE. (TC NR 20070207004)

CA070226006	CESSNA	CONT	CAMSHAFT	WORN
2/19/2007	150H	O200A	626608	ENGINE

(CAN) EXCESSIVE WEAR ON NR 1 AND NR 2 INTAKE LOBE. CAUSED EXCESSIVE PITTING ON ALL LIFTER BODY ASSEMBLIES. (TC NR 20070226006)

CA070214004	CESSNA	CONT	EXHAUST VALVE	BROKEN
2/3/2007	150L	O200A	5A10204	CYLINDER HEAD

(CAN) DURING TAKEOFF, AN ENGINE VIBRATION WAS FELT. A PRIORITY LANDING WAS REQUESTED. CYLINDER EXHAUST VALVE NR 3 FOUND BROKEN AT THE VALVE HEAD. CYLINDER SA10200, S/N AM1376 INSTALLED. OTHER VALVES INSPECTED AND REPLACED VALVES SA10204 ON CYLINDER NR 4 AND NR 2. (TC NR 20070214004)

CA070329006	CESSNA	CONT	CYLINDER	DETACHED
3/13/2007	150L	O200A		NR 4

(CAN) ENGINE VIBRATION AND POWER LOSS IN FLIGHT, ENGINE CAME TO TOTAL STOP ON TAXIWAY. CYLINDER NR 4 FOUND DETACHED. ENGINE (2587.4 HOURS). ENGINE REMOVED FOR OVERHAULED. (TC NR 20070329006)

2007FA0000361	CESSNA	CONT	COUPLING	WORN
4/19/2007	150M	O200A		ALTERNATOR

ALTERNATOR DRIVE COUPLING WAS WORN AND SEVERELY LOOSE WITH EXCESSIVE PLAY DUE TO SOFT, UNDERCUT BUSHINGS PN 632050. IN ADDITION, THE DRIVE HUB KEY WAY WAS SEVERELY WORN CAUSING EXCESSIVE PLAY OF THE HUB ON THE SHAFT. CONTINUED OPERATION WOULD RESULT IN DRIVE COUPLING RETAINER PN 352030 FAILING AND POTENTIALLY CAUSING CATASTROPHIC ENGINE FAILURE. THE CURRENT RUBBER BUSHINGS ARE SOFT AND ALLOW THE DRIVE GEAR TO CRUSH AND DEFORM THEM WHICH REDUCES SHOCK ABSORPTION AND LEADS TO DRIVE COUPLING FAILURE WHEN DRIVE GEAR BEGINS TO CONTACT THE RETAINER CUP DIRECTLY. THIS IS A RECURRING PROBLEM AS FOUND ON OTHER ALTERNATORS USING THIS TYPE OF DRIVE COUPLING AS LISTED IN SB 95-3B. (K)

CA070207005	CESSNA	CONT	PUMP	FAILED
1/20/2006	150M	O200A		ACCELERATOR

(CAN) ON ADDING FULL POWER THE ENGINE STALLED AND STOPPED RUNNING. - FOUND TO BE THE ACCELERATOR PUMP WAS NOT WORKING PROPERLY. (TC NR 20070207005)

CA070228007	CESSNA	LYC	TRANSPONDER	INTERMITTENT
2/15/2007	152	O235L2C	KT76A	

(CAN) DURING CIRCUIT FLYING, TOWER REPORTED TO PILOT THAT HIS TRANSPONDER WAS INTERMITTENT. PILOT CANCELLED REMAINDER OF FLIGHT AND RETURNED TO AIRPORT. DEFECT WAS NOT DUPLICATED ON THE GROUND. DEFECT OCCURED THE NEXT DAY WHILE AIRCRAFT WAS AGAIN IN THE CIRCUIT, PILOT CANCELLED AND RETURNED TO AIRPORT. MAINTENANCE REMOVED TRANSPONDER, CLEANED CONTACTS AND RE-RACKED TRANSPONDER. AIRCRAFT RETURNED TO SERVICE AND HAS NOT HAD ANOTHER OCCURANCE IN OVER 50 HOURS. (TC NR 20070228007)

CA070301001	CESSNA	LYC		INTAKE VALVE	CRACKED
3/1/2007	152	O235L2C		LW11901	ENGINE

(CAN) INVESTIGATING LOW COMPRESSION REVEALED SMALL CHUNK (ONE QUARTER INCH SQUARE) OF INTAKE VALVE MISSING ON EDGE, AND A CRACK IN ANOTHER AREA. (TC NR 20070301001)

CA070118001	CESSNA	LYC	CESSNA	SKIN	CRACKED
1/15/2007	152	O235L2C		04330106	RUDDER

(CAN) WHILE DOING 100 HR INSPECTION ON AIRCRAFT, MECHANIC NOTICED THAT THERE WAS A CRACK BY THE LIGHTING HOLE BELOW THE TOP HINGE ATTACH BRACKET. NEW SKIN ORDERED AND WHEN RECEIVED NOTICED THAT MFG HAS REMOVED THIS LIGHTING HOLE. REST OF AIRCRAFT OF THIS TYPE IN FLEET WILL BE INSPECTED FOR THIS SAME DAMAGE. (TC NR 20070118001)

2007FA0000348	CESSNA	CONT		LINE	CHAFED
3/30/2007	170B	C145*			BRAKE

DURING AN ANNUAL INSPECTION, THE RT BRAKE SUPPLY LINE WAS FOUND CHAFED BY THE ELEVATOR CONTROL CABLE. THE CHAFING OCCURRED WHEN THE ELEVATOR IS OPERATED NEAR THE (UP) LIMIT OF TRAVEL. THE LOCATION OF CHAFE IS VIEWED DIRECTLY BELOW THE ELEVATOR TRIM WHEEL, LOOKING SLIGHTLY FORWARD. THE BRAKE TUBE WAS NOT SUPPORTED BY ANY CLAMPING MEANS TO SECURE THE TUBE. A REPLACEMENT TUBE WAS FABRICATED AND INSTALLED WITH ADEQUATE CLAMPING TO INSURE NO FURTHER CHAFING ACTION. THE BRAKE WAS SERVICED AND A SATISFACTORY LEAK CHECK WAS ACCOMPLISHED. THE ELEVATOR CONTROL CABLE WAS CHECKED FOR DAMAGE AND IS ACCEPTABLE FOR SERVICE. PHOTOS DETAILING THE CHAFED AREA AND MFG IPC FOR INSTALLATION DETAIL. (K)

CA070228009	CESSNA	LYC		SWITCH	FAILED
2/27/2007	172M	O320E2D			AVIONICS

(CAN) DURING TRAINING FLIGHT, PILOT EXPERIENCED COMPLETE AVIONICS FAILURE WHEN DEPRESSING THE PTT SWITCH. AIRCRAFT RETURNED TO BASE, MAINTENANCE DUPLICATED THE SNAG, DISCOVERED THE AVIONICS SWITCH DEFECTIVE AND REPLACED IT WITH NEW ONE, NO FURTHER FAULTS FOUND. (TC NR 20070228009)

CA070208004	CESSNA	LYC		WIRE	BURNED
2/7/2007	172M	O320E2D		S21351	CONNECTOR

(CAN) DURING A ROUTINE INSPECTION IT WAS DISCOVERED THAT ONE WIRE GOING TO THE OVER VOLTAGE WARNING LIGHT WAS FOUND BURNED. CAUSE OF THE BURNED WIRE WAS DUE TO FAILURE OF A BUTT SPLICE IN THE WIRE WHICH HAD EXPOSED THE BARE WIRE CAUSING IT TO SHORT OUT. THE BURNED SECTION OF WIRE WAS REPLACED. THE AIRCRAFT WAS GROUND CHECKED SERVICEABLE AND RETURNED TO SERVICE. (TC NR 20070208004)

2007FA0000389	CESSNA	LYC		CYLINDER	CRACKED
4/20/2007	172N	O320D2J		5L32006WA1	ENGINE

CRACK FROM EXH STUD AROUND CYLINDER TO UPPER SPARK PLUG. (K)

CA070313001	CESSNA	LYC		LIFTER	UNLOCKED
3/12/2007	172N	O320H2AD		LW16812	INTAKE

(CAN) DURING THE REAMING OF A STICKY EXHAUST VALVE GUIDE IN CYLINDER NR 4, IT WAS FOUND THAT THE NR 4 CYLINDER INTAKE HYDRAULIC LIFTER HAD LOST ITS SNAP RING. THE WEAR PATTERN SHOWED THAT THE SNAP RING HAD MIGRATED ALONG BETWEEN THE PUSHROD AND THE SHROUD TUBE (THE SNAP RING SHOWED

WEAR ON ITS INSIDE DIAMETER WERE IT HAD MOVED ALONG THE PUSHROD, AND WEAR ON ITS OUTSIDE DIAMETER, WHERE IT HAD WORN ALONG THE INSIDE OF THE PUSHROD SHROUD TUBE). THE SNAP RING WAS FOUND INTACT (SAME SHAPE), IN THE NR 4 CYLINDER ROCKER BOX. ONE EXPLANATION IS THAT WHEN THE CYLINDER WAS CHANGED 525.0 HRS PREVIOUS, THE SNAP RING WAS NOT PROPERLY INSTALLED IN THE HYDRAULIC LIFTER WHEN IT WAS BLED DOWN BEFORE INSTALLATION, AND IT POPPED OUT DURING ENGINE RUNS. ANOTHER EXPLANATION IS THAT THE SNAP RING MAY HAVE BEEN WORN, OR THE HYDRAULIC LIFTER MAY HAVE HAD A WORN SNAP RING GROOVE, WHICH CAUSED THE SNAP RING TO POP OUT ON ITS OWN. A NEW HYDRAULIC LIFTER WAS INSTALLED. AIRCRAFT RUN AND FOUND SERVICEABLE. (TC NR 20070313001)

2007FA0000333	CESSNA	LYC		ROCKER	BROKEN
4/6/2007	172N	O320H2AD		LW15014	ENGINE CYLINDER

THE STAMPED EXHAUST STEEL ROCKER ARM WAS FOUND BROKEN THROUGH AT PUSH ROD, AND THE INTAKE ROCKER ARM WAS CRACKED, AND THE PUSH ROD WAS BENT BADLY. THE ENGINE HAD 120 HR TSO AND NEW FACTORY CYLIDERS WERE INSTALLED. (K)

CA070313002	CESSNA	LYC	CESSNA	BULKHEAD	CRACKED
3/12/2007	172P	O320D2J		05503214	SPINNER

(CAN) THIS AIRCRAFT HAS HAD ALL THE AFT BULKHEAD AND HEAVIER SPINNER UPGRADES AND HAS HAD IT ALL ASSEMBLED IAW THE LATEST SB. CRACKS WERE FOUND FORMING PARALLEL FROM THE PROP BOLT HEAD CONTACT SURFACE ON (3) OF THE (6) HOLES. YOU HAVE TO LOOK VERY CAREFULLY AS THE CRACKS RADIATING FROM THE PROP BOLT HOLES ARE VERY FINE AND HIDE UNDER THE FACTORY PRIMER. THE TORQUE OF THE PROP BOLTS IS SHEAR STRESSING THE BULKHEAD. A COVER PLATE IS NEEDED TO OFFSET THE BOLTS FROM THE THIN ALUMINUM SHEET METAL BULKHEAD. THIS PROBLEM IS RE-OCCURRING WITH THIS SPINNER ASSY ON SEVERAL OF OUR AC THAT WE MAINTAIN. (TC NR 20070313002)

CA060724006	CESSNA	LYC	BULKHEAD	CRACKED
7/20/2006	172P	O320D2J	05503214	PROP SPINNER

(CAN) THIS BULKHEAD HAS CRACKS DIRECTLY ABOVE THE BOLT HOLES APPROXIMATELY ONE INCH LONG RADIALY ALONG THE INNER BEND RADIUS ABOVE THE BOLT HOLE BUT NOT INTERSECTING THE BOLT HOLE. (TC NR 20060724006)

CA060724007	CESSNA	LYC	BULKHEAD	CRACKED
7/21/2006	172P	O320D2J	05503214	SPINNER

(CAN) THIS BULKHEAD HAS CRACKS DIRECTLY ABOVE THE BOLT HOLES APPROXIMATELY ONE INCH LONG RADIALY ALONG THE INNER BEND RADIUS ABOVE THE BOLT HOLE BUT NOT INTERSECTING THE BOLT HOLE. (TC NR 20060724007)

2007FA0000344	CESSNA	LYC	SERVO	WORN
3/23/2007	172R	IO360L2A	25765362	ENGINE FUEL

PILOT REPORTS THAT ENGINE DIED ON FINAL APPROACH. ADJUSTED IDLE STOP SLIGHTLY AND MIXTURE SLIGHTLY. RAN ENGINE AND FOUND THAT SLIGHT ADJUSTMENTS MADE TO FUEL SERVO CREATED LARGE CHANGES IN THE ENGINE OPERATION. UNABLE TO ADJUST THE FUEL SERVO TO MEET PERFORMANCE REQUIREMENTS STATED IN AD2001-06-17, (D)(2). THIS IS THE SECOND ATTEMPT TO ADJUST THE FUEL SERVO. THE FUEL SERVO WAS REMOVED FROM THE AIRCRAFT AND FORWARDED FOR REPAIR UNDER THEIR W/O NR 07-00900. ORIGINAL FUEL SERVO, PN 25765362, SN 70148401, REINSTALLED ON AC UPON COMPLETION OF REPAIR, WITH REFERENCE TO MM, CHAP 73. IDLE AND MIXTURE ADJUSTMENT COMPLETED WITH REFERENCE TO MM, CHAP 73. OPERATIONAL/LEAK CHECK GOOD AT THIS TIME. (K)

CA070202017	CESSNA	LYC	CONNECTOR	CORRODED
2/1/2007	172R	IO360L2A		POWER JUNCTION

(CAN) DURING A PREFLIGHT INSPECTION WHEN THE FLAPS WERE SELECTED TO LOWER A COMPLETE POWER FAILURE RESULTED. UPON INSPECTION BY THE AMO THE POWER JUNCTION BOX PLUG WAS FOUND CORRODED RESULTING IN PINS BREAKING WHEN PLUG WAS PULLED APART FOR INSPECTION. THIS PLUG FAILURE RESULTED IN A POOR CONTINUITY FROM THE MASTER SOLENOID AND THE MASTER SWITCH RESULTING IN A 12+ VOLTAGE LOSS AND THE HOMINOID FAILING TO ENGAGE. (TC NR 20070202017)

2007FA0000362	CESSNA	LYC	POWERPACK	MISREPAIRED
4/19/2007	172RG	O360*	98811281	HYD SYSTEM

INSTALLED A NEWLY OVERHAULED COMPLETE HYDRAULIC POWER PACK UNIT AS RECEIVED. AFTER INSTALLING THE UNIT IN THE AIRCRAFT AND PERFORMING A RETRACT TEST THE NEW OVERHAULED GEAR MOTOR WAS JERKY AND ACTING LIKE IT WAS SHORTING OUT. REMOVED MOTOR AND INSTALLED ANOTHER NEW OVERHAULED MOTOR AND SYSTEM WORKED FINE. (K)

2007FA0000394	CESSNA	LYC	ACTUATOR	CRACKED
4/6/2007	172RG	O360F1A6	98820152	LT MLG

PILOT REPORTED LOUD POP JUST BEFORE INTERING THE PATTERN AT M89. WHEN HE EXTENDED THE GEAR THE GREEN GEAR DOWN LIGHT WOULD NOT COME ON. FLY BY REVEALED THE LEFT GEAR WAS IN TRANSIENT. GEAR UP LANDING FOLLOWED. INSPECTION OF LT MAIN GEAR ACTUATOR REVEALED THE ACTUATOR HOUSING WAS CRACKED ACROSS THE FORWARD ATTACH BOLT HOLE. THE CRACKED HOUSING ALLOWED THE PISTON RACK TO JUMP GEARS ON THE PINION GEAR ATTACHED TO MAIN GEAR LEG. THIS AREA IS INSPECTED EACH 100 HR FOR CRACKS AND DEFECTS VERY CAREFULLY WITH LIGHTS AND INSPECTION MIRROWS. TIME SINCE LAST INSPECTION WAS 25 HRS. AD 2001-06-06 WAS CW 8-13-2001 TACH 497, TOTAL TIME 4516 WITH NO DEFECTS FOUND. (K)

2007FA0000363	CESSNA	LYC	BUSHING	UNSERVICEABLE
4/11/2007	172S	IO360A1A	05412024	RMLG

BUSHING LINER SEPARATED FROM METAL SHELL, SLID OUT OF SHELL CAUSING AC TO LEAN RT WING TIP LOW. BETTER BONDING ADHESIVE FOR LINER TO SHELL. NEED TO GO TO A TIME SCHEDULE FOR INSPECTION. (K)

2007FA0000299	CESSNA	LYC	LINE	CHAFED
3/26/2007	172S	IO360L2A	050011849	FUEL SYSTEM

FOUND FUEL LINE PN 05001(8-49, FUEL RETURN LINE TO RESERVOIR WORN BY RUBBING ON NOSE STEERING ROD JUST BEHIND FIREWALL. INSTALLED NEW LINE SO AS NOT TO RUB ON STEERING. INSTALLED SPIRAL WRAP ON AREA WHERE RUBBING HAD OCCURRED. NOTE: FUEL LINE WAS WORN TO POINT OF LEAKING. RECOMMEND INSPECTING NEW AC FOR PROPER LINE INSTALLATION. (K)

2007FA0000332	CESSNA	CONT	SNAP RING	MISMANUFACTURED
4/1/2007	180A	IO470*		ENGINE

SNAP RING USED TO RETAIN PLATE PN 643629 AND COUNTERWEIGHT PIN 643626-101 WAS BEING INSTALLED IN COUNTERWEIGHT. UPON INSTALLING, THE LAST SNAP RING, IT WAS NOTICED THAT THE SNAP RING DID NOT HAVE ANY RETAINING PROPERTIES. IT LACKED TEMPER TO SPRING BACK AND COULD BE FORMED INTO ANY POSITION WHICH COULD HAVE ALLOWED THE PLATE AND PIN TO FALL OUT OF THE COUNTERWEIGHT CAUSING ENGINE FAILURE.. THE SNAP RING WAS PURCHASED ON 12 MARCH, 2007. THE BATCH NR LISTED FOR THE SNAP RING WAS 0000070137 UNDER API`S PO NR 4500018586. (K)

2007FA0000356	CESSNA	CONT	CYLINDER HEAD	SEPARATED
4/18/2007	182A	O470L	FRCN68OACA01	NR 1

PERFORMED CYLINDER COMPRESSION TEST AND FOUND NR 1 CYLINDER READING 0 PSI AND FOUND LEAKING AROUND CYLINDER HEAD AND BARREL FINS. UPON REMOVAL THE HEAD IS COCKED SIDEWAYS ON THE BARREL. THE HEAD WAS SEPARATING FROM BARREL. THE CYLINDER PN FRCN68. OACA/01 CL68 CERMINIL FREEDOM. CYLINDER ONLY HAD 145.6 HRS TIME IN SERVICE OVERHAUL IN DEC 2003. (K)

2007FA0000450	CESSNA	LYC	CYLINDER	SCRATCHED
3/28/2007	206H	TIO540AJ1A	LW19279	ENGINE

SET OF 6 CYLINDERS CAME IN WITH 2 BROKEN CONTROL RINGS. CYLINDERS HAD RING STEPS ON TOP AND BOTTOM OF CYLINDER BARRELS. CORROSION WAS PRESENT IN BARRELS FROM THE MIDDLE UP TO THE HEAD OF THE CYLINDERS. EXHAUST GUIDES WERE FAR OUT OF LIMITS AND DIFFICULT TO REMOVE RESULTING IN HAVING TO OVERSIZE 3 BOSSES TO P05 GUIDES AND THE OTHER 3 TO P10. 2 EXHAUST SEATS FELL OUT DURING THE HEAT SOAK FOR INSTALLING THE EXHAUST GUIDES. BROKEN RINGS DAMAGED 2 PISTONS WHICH HAD TO BE REMOVED FROM SERVICE. 4 OTHER PISTONS WERE DAMAGED IN THE PISTON PIN BOSSES. THE BROKEN

RINGS ALSO CAUSED MODERATE SCRATCHING TO THE BARREL OF THE CYLINDERS WHICH WAS REMOVABLE BY POWER HONING. 2 CYLINDERS HAD TO BE OVERSIZED FROM THE CORROSION AND SCRATCHING DAMAGE. THIS ENGINE HAD 1023 HOURS SINCE NEW. THE OWNER BOUGHT THE PLANE WITH 531 HOURS ON IT. HE NOTED THAT AT THE TIME OF THE INCIDENT THAT THERE WAS OIL CONSUMPTION OF 1 QUART PER HOUR ON THE ENGINE AND OIL COVERED THE BELLY OF THE AIRCRAFT. HE NOTED OIL LEAKING FROM THE BREATHER LINE.

26519A	CESSNA	PWA	MCAULY	BUSHING	CRACKED
5/2/2007	208B	PT6*		A4564	BLADE LINK

VIBRATION REPORTED BY PILOT. OPERATOR WAS UNABLE TO DYNAMIC BALANCE. OPERATOR NOTICED ONE BLADE HAS ROTATIONAL PLAY. UPON DISASSEMBLY NR 2 BLADE LINK BUSHING P/N A4564 WAS FOUND CRACKED WITH PIECES MISSING. THE LINK P/N B4743 AND BLADE ACTUATING PIN P/N B5072-1 WERE DAMAGED FROM METAL TO METAL CONTACT.

2007FA0000355	CESSNA	PWA		EXHAUST DUCT	CRACKED
4/17/2007	208B	PT6A114A		265401416	

CRACKING OCCURRED IN A SHORT TIME SPAN, DURING NORMAL OPERATION. CRACKS WERE OVER AN AREA APPROX 7 INCHES X 7 INCHES. ONE PIECE APPROX 3 INCHES X 3 INCHES SEPARATED FROM THE PART. AFTER CRACKING, DEFORMATION OF LOWER TRAILING EDGE OCCURRED BECAUSE IT WAS NO LONGER RIGID. IF THIS PROBLEM HAD GONE UNNOTICED, HEAT DAMAGE WOULD PROBABLY HAVE OCCURRED TO ADJACENT PARTS. MATERIAL OR MFG PROCESS COULD BE SUSPECT. RECENT MFG BULLETIN CAB 07-2 AFFECTS SOME PRIMARY EXHAUST DUCTS DUE TO IMPROPER MFG, BUT IT DOES NOT APPLY TO THIS ONE. (MFG HAS BEEN MADE AWARE OF THIS PROBLEM, PART WAS RETURNED TO THEM ON REQUEST FOR EVALUATION). (K)

2007FA0000300	CESSNA	PWA	CLEVELAND	HOUSING	DEFECTIVE
3/27/2007	208B	PT6A114A		16011800	BRAKE CALIPER

THE MAIN CASTING, WHICH HOUSES THE BRAKE CALIPER PISTONS LEAKS FLUID UNDER NORMAL BRAKING PRESSURE. THE LEAKS ARE FROM EXCESSIVE POROSITY IN THE CASTING. CASTING THIS IS THE SECOND OCCURRENCE IN OUR OPERATIONS. THE FIRST WAS NOT REPORTED. (K)

OMKR20071	CESSNA	CONT		DRAG LINK	BROKEN
3/31/2007	310C	IO470*		08420003	NLG

UPON LANDING, THE NOSE LANDING GEAR DRAG LINK ASSEMBLY P/N 0842000-3 BROKE AT THE STRUT ATTACH POINT, ALLOWING THE NOSE GEAR TO COLLAPSE REARWARD, CAUSING THE AIRCRAFT TO SLIDE ON ITS NOSE UNTIL IT STOPPED. THE DRAG LINK ASSEMBLY APPEARS TO HAVE BROKEN THROUGH THE FORWARD ATTACH HOLE. TOTAL TIME OF THE PART AND TOTAL TIME OF THE AIRCRAFT ARE UNKNOWN AT THIS TIME DUE TO ABSENCE OF LOG BOOKS. CURRENT HOBBS TIME IS 118.4.

2007FA0000369	CESSNA	CONT		LANDING GEAR	MALFUNCTIONED
4/4/2007	310D	IO470*		084100097	LT MLG

THE PILOT NOTED THAT SOMETHING WAS HANGING DOWN UNDER THE AC IN CRUISE FLIGHT AND THAT THE AC WAS NOT GOING AS FAST AS IT NORMALLY DID. ANOTHER AC NOTED THAT THE GEAR WAS UP, BUT THAT THE LEFT IB GEAR DOOR WAS HANGING DOWN PART WAY. THE TOWER CONFIRMED THAT THE GEAR APPEARED TO BE DOWN AND LOCKED, BUT THAT THE LT IB GEAR DOOR WAS PART WAY DOWN. ALL INDICATIONS OF THE GEAR IN THE AC WERE NORMAL AND THE GREEN LIGHT WAS ON WHEN THE AC LANDED. THE AIRCRAFT LANDED NORMALLY AND ROLLED ABOUT 800 FT DOWN THE RUNWAY WHEN THE LEFT MAIN GEAR BROKE OUT OF THE WHEEL WELL. IT WENT STRAIGHT BACK BEHIND THE WING AND THE AC WENT AROUND TO THE LEFT AND OFF THE RUNWAY. THE LT IB DOOR WILL MOVE SOME BY HAND AND SEEMED TO OPEN ENOUGH FOR THE GEAR TO GO UP AND DOWN. THE GEAR INDICATION UP OR DOWN IN THE AC WAS CORRECT AND THE GEAR WAS LOCKED IN BOTH POSITIONS. THE GEAR TORE OUT OF THE WHEEL WELL TO THE BACK OF THE WING INSTEAD OF FOLDING IB. THE OTHER LANDING GEAR STILL WORK NORMALLY WHEN RETRACTED ON THE JACKS. (K)

2007FA0000331	CESSNA	CONT		ROD BOLT	BROKEN
4/4/2007	310R	IO520MB		629340	LT ENGINE

PRELIMINARY INSPECTION FINDINGS: IN FLIGHT, LT ENGINE FAILURE ON CLIMB OUT. LT ENGINE HAD 737.1 HOURS AND PUT IN SERVICE 05/2003. LARGE HOLE IN CASE AROUND NR 5 AND 6 CYLINDER. NR 5 ROD

SEPARATED FROM CRANK AND BROKEN IN TWO PIECES A FEW INCHES FROM PISTON PIN. SUBSEQUENT FINDINGS FROM ENGINE TEARDOWN REPORT PERFORMED BY MFG. THE SIGNATURES PRESENT ON THE NR 5 CYLINDER BORE AND THE DAMAGE TO THE NR 5 CONNECTING ROD ARE CONSISTENT WITH A HYDROSTATIC LOCK EVENT. PRELIMINARY INFORMATION WAS BASED ON A SB CE-00-07, AND SDR REPORTS ISSUED BETWEEN 1995 AND PRESENT, ON SAME MODEL ENGINE WITH SIMILAR BOLT FAILURES. (K)

CM2R747K	CESSNA	ALLSN	BELLCRANK	BROKEN
5/1/2007	340A	250C28B	53608014	ELEVATOR

BEARING AND BOLT FAILED IN THE ELEVATOR BELLCRANK P/N 5360801-4. CENTER BEARING THAT SUPPORTS THIS BELLCRANK FAILED. BEARING IS P/N MS27640-4. BOLT P/N AN4-14 WAS SEVERELY WORN AND BROKEN IN TWO. IF EITHER END OF THE BOLT SLIPPED OUT OF THIS BELLCRANK, THE A/C WOULD HAVE LOST PRIMARY ELEVATOR CONTROL. THE ELEVATOR TRIM SYSTEM WOULD STILL FUNCTION.

2007FA0000396	CESSNA	CONT	SWITCH	STUCK
4/30/2007	414	TSIO520*	593250101	COCKPIT

AVIONICS MASTER SWITCH STUCK IN THE ON POSITION AD 2005-20-25 WAS PREVIOUSL COMPLIED WITH AND DID NOT APPLY. DATE CODE OF THE SWITCH WAS 7647. THERE WAS NO BURNING SMELL WHEN THE SWITCH BECAME STUCK. (K)

2007FA0000388	CESSNA	CONT	ACTUATOR	CORRODED
4/13/2007	414A	TSIO520*	99101368	LT MLG

LT LANDING GEAR ACTUATOR FAILED WHILE TAXING. COLLAPSED LT WING. DAMAGED LT PROP AND WING TIP. ACTUATOR INSPECTED AND FOUND WATER INSIDE. ACTUATOR OVERHAULED AND REINSTALLED NOSE AND RT LG ACTUATOR REMOVED FOR INSPECTION AND CHECKED GOOD. (K)

CA070228008	CESSNA	CONT	WINDOW	CRACKED
2/8/2007	421B	GTSIO520H	51116052	EMERGENCY EXIT

(CAN) DURING MAJOR INSPECTION OF AIRCRAFT, REMOVED PLASTIC UPHOLSTERY COVER ON THE EMREGENCY EXIT HATCH. WINDOW FOUND CRACKED AT ALL LOWER ATTACH SCREW HOLES, ONLY THE SEALANT KEEPING THE WINDOW IN PLACE. (TC NR 20070228008)

2007FA0000366	CESSNA	CONT	GASKET	BROKEN
4/12/2007	421B	GTSIO520H	652065	OIL COOLER

AIRCRAFT DEPARTED ON A CHARTER , PILOT WAS OVER LAKE WHEN HE NOTICED ENGINE OIL COMING OUT OF TOP ENGINE COWLING COOLING LOUVERS. PILOT NOTIFIED CONTROL HE WAS LOSING OIL. FEATHERED THE RT ENGINE AND DIVERTED . PILOT MADE UNEVENTFUL SINGLE ENGINE LANDING AND TAXIED TO MAINTENANCE HANGAR. DISCOVERED THE ENGINE WAS SEIZED AND THE COWLING AND NACESSE BOTTOM COVERED WITH OIL. STARTED DISASSEMBLY AND FOUND THE OIL COOLER GASKET, PN 652065, HAD .1250 INCH SECTION MISSING FROM THE UPPER FORWARD AREA OF THE GASKET. (K)

CA070213005	CESSNA	PWA	LINE	CORRODED
2/13/2007	425	PT6A112	510010951	CREW O2 SYS

(CAN) FOUND LT SIDE CABIN OXYGEN LINE P/N 5100109-51 CORRODED WHERE IT CROSSES THE OVERHEAD CABIN AIR DUCT P/N CM3212-2 (WL 103.10) AT FS 160.0. (TC NR 20070213005)

2007FA0000343	CESSNA	GARRTT	SCAVENGE PUMP	FLUCTUATES
4/11/2007	441	TPE33110	31080261	LT ENGINE

COMMANDED IN-FLIGHT SHUTDOWN OF LT ENGINE DUE TO FLUCTUATING OIL PRESSURE. UNEVENTFUL SINGLE ENGINE LANDING. ENGINE LOST OIL. OIL EXITED ENGINE FROM TURBINE AIR/OIL SEAL AS A RESULT OF TURBINE SCAVENGE PUMP FAILURE. RECOMMEND COMPLIANCE WITH SB 72-2074R1. (K)

2007FA0000222	CESSNA	PWA	FUEL FILTER	SEPARATED
2/15/2007	500CESSNA	JT15D1A	99120154	RT WING

THE RT FUEL FILTER ASSY SEPARATED FROM THE STANDPIPE DUE TO THE SNAP-RING BECOMING DISLOGED

AND RESULTED IN A SUBSTANTIAL FUEL LEAK. (K)

CA070213002	CESSNA	WILINT	VALVE	FAILED
1/31/2007	525	FJ44	991242339	HYD SYSTEM

(CAN) POST INSPECTION RUN REVEALED HYDRAULIC PRESSURE ON ANNUNCIATOR LIGHT DID NOT EXTINGUISH WHEN SYSTEM SHOULD HAVE BEEN AT REST. HYDAULIC LOADING VALVE FOUND FAILED. BLEED ORIFICE RECOVERED FROM HYDRAULIC MANIFOLD UNDER RELIEF VALVE (3RD FROM LOADING VALVE). LOADING VALVE MAY HAVE FALLEN APART DURING EMERGENCY GEAR EXTENSION TEST. LOADING VALVE REPLACED. ALL TESTS NORMAL. FAILED VALVE SENT TO MFG FOR ANALYSIS. (TC NR 20070213002)

CA070209002	CESSNA	PWA	BUCKLE	MALFUNCTIONED
2/7/2007	550	JT15D4	110193201	SEAT BELT

(CAN) WITH A COCKPIT CREW MEMBER STRAPPED INTO THEIR SEAT WITH THE SEAT FULLY FORWARD, INTERFERENCE BETWEEN THE CONTROL COLUMN YOKE AND THE ROTARY SEAT BELT BUCKLE FINS OCCURS WHEN THE CONTROL YOKE IS PULLED FULLY AFT AND ROTATED. THE POSSIBILITY EXISTS THAT THE SEAT BELT ROTARY BUCKLE COULD BE INADVERTENTLY RELEASED DURING EXTREME FLIGHT CONTROL MOVEMENTS. THIS CONDITION WAS VERIFIED WHILE PERFORMING THE PROCEDURE AS DESCIBED IN FAA SAIB NM-06-29. A GUARDED BUCKLE WOULD NEGATE THE POSSIBILITY OF ACCIDENTAL RELEASE (TC NR 20070209002)

CA070209003	CESSNA	PWA	BUCKLE	INTERFERENCE
2/7/2007	550	JT15D4	110193201	CREW SEATS

(CAN) WITH A COCKPIT CREW MEMBER STRAPPED INTO THEIR SEAT WITH THE SEAT FULLY FORWARD, INTERFERENCE BETWEEN THE CONTROL COLUMN YOKE AND THE ROTARY SEAT BELT BUCKLE FINS OCCURS WHEN THE CONTROL YOKE IS PULLED FULLY AFT AND ROTATED. THE POSSIBILITY EXISTS THAT THE SEAT BELT ROTARY BUCKLE COULD BE INADVERTENTLY RELEASED DURING EXTREME FLIGHT CONTROL MOVEMENTS. THIS CONDITION WAS VERIFIED WHILE PERFORMING THE PROCEDURE AS DESCIBED IN FAA SAIB NM-06-29. A GUARDED BUCKLE WOULD NEGATE THE POSSIBILITY OF ACCIDENTAL RELEASE. (TC NR 20070209003)

CA070205005	CESSNA	PWA	BUCKLE	FAILED
2/5/2007	550	JT15D4	497900312	ROTARY SEAT BELT

(CAN) REF FAA SPECIAL AIRWORTHINESS INFORMATION BULLETIN NM-06-29 AND MFG CAMPAIGN NOTICE 010-25-10-011 REV 1 FIXED WING AIRCRAFT EQUIPPED WITH ROTARY CREW SEAT BELT BUCKLES. WHEN THE CONTROL COLUMN IS PULLED FULLY AFT THE SEAT BELT BUCKLE CAN BE RELEASED BY ROTATING THE CONTROL WHEEL IN BOTH THE PILOT AND CO-PILOT POSITIONS. (TC NR 20070205005)

CA070329005	CESSNA	PWA	BUCKLE	INTERFERENCE
3/29/2007	550	JT15D4	110195203	SEATBELT

(CAN) CONTROL YOKE INTERFERENCE WITH ROTORY SEAT BUCKLES INSPECTED IAW INTERNAL CAMPAIGN NOTICE 010-25-10-011. OPERATION OF EITHER PILOTS AND CO-PILOTS YOKES WITH SEATS FULL FORWARD CONFIRMS THAT INTERFERENCE CAN CAUSE UNLATCHING OF THE SEATBELT ROTARY BUCKLES. (TC NR 20070329005)

2007FA0000293	CESSNA	PWA	LINK	CORRODED
3/22/2007	560CESSNA	JT15D5		THRUST REVERSER

ALL DRIVE LINK PIVOT BOLTS AND OVER CENTER LINKS SEVERELY CORRODED AND WORN. PROBABLE CAUSE IS INADEQUATE LUBE. MANUAL STATES TR`S MUST BE TORN DOWN AND LUBED UPON ASSEMBLY AT SPECIFIC INTERVALS. ENGINEERING STATES THAT TEARDOWN IS NOT NECESSARY AND ON WING LUBRICATION IS ADEQUATE. THESE FINDINGS INDICATE OTHERWISE. (K)

PAZR200700001	CESSNA	PWA	ATTACH FITTING	CRACKED
4/16/2007	560XL	PW545A	663110215	ZONE 300

DURING A SCHEDULED INSPECTION, A 1.5 INCH CRACK WAS FOUND IN THE LOWER RADIUS OF THE HORIZONTAL STABILIZER AFT ATTACH FITTING.

CA070209009	CESSNA	PWA	MOTOR	UNSERVICEABLE

1/12/2007	560XL	PW545A	31J285704	BLEED VALVE

(CAN) ON APPROACH, THE ENGINE EMITTED A LOUD NOISE ACCOMPANIED BY VIBRATION, AN EEC REVERSION AND A LACK OF THROTTLE RESPONSE. THE ENGINE WAS SHUTDOWN IN FLIGHT. SUBSEQUENT INSPECTION REVEALED A UNSERVICEABLE BLEED VALVE TORQUE MOTOR. (TC NR 20070209009)

CA070209014	CESSNA	PWA	HMU	UNSERVICEABLE
1/19/2007	560XL	PW545A	8237007	ENGINE

(CAN) THE ENGINE FLAMED OUT IN FLIGHT. SUBSEQUENT INSPECTION REVEALED AN UNSERVICEABLE HYDROMECHANICAL FCU. (TC NR 20070209014)

2007FA0000367	CESSNA		DOUBLER	FATIGUED
4/20/2007	650		6213011139	UNKNOWN

THE 6213011139 LT DOUBLER AND THE 6213011140 RT DOUBLER FATIGUE CRACKING ON BOTH. THE 6213011139 LT DOUBLER AND THE 6213011140 RT DOUBLER, ON MODEL 650 IS PART OF THE NOSE WHEEL WELL ASSY, HAS BEEN FOUND WITH FATIGUE CRACKING ON MULTIPLE SN. CURRENTLY THE PART IS BEING REMOVED AND REPLACED AS NEEDED AND A SERVICE CONDITION REPORT (SCR) HAS BEEN SUBMITTED TO ENGINEERING FOR REVIEW. (K)

2007FA0000368	CESSNA		DOUBLER	FATIGUED
4/20/2007	650		6213011140	FS 92-94

THE 6213011-139 LT DOUBLER AND THE 6213011-140 RT DOUBLER FATIGUE CRACKING ON BOTH. THE 6213011-139 LT DOUBLER AND THE 6213011-140 RT DOUBLER, ON MODEL 650 IS PART OF THE NOSE WHEEL WELL ASSY, HAS BEEN FOUND WITH FATIGUE CRACKING ON MULTIPLE SN. CURRENTLY THE PART IS BEING REMOVED AND REPLACED AS NEEDED, AND A SERVICE CONDITION REPORT (SCR) HAS BEEN SUBMITTED TO ENGINEERING FOR REVIEW. (K)

CA060906026	CESSNA	ALLSN	WINDSHIELD	FAILED
8/31/2006	750	AE3007C	991438012	COCKPIT

(CAN) IN CRUISE AT 41000 FEET A SOUND LIKE A SHOTGUN WAS HEARD AND THE RT WINDSHIELD OUTER PANE SHATTERED. AFTER AN UNSCHEDULED LANDING AND INSPECTION BY AN AME IT WAS DETERMINED TO BE EITHER A LIGHTNING STRIKE OR A SHORT OF THE HEATING ELEMENT. THE WINDOW WAS THEN REPLACED AND A LIGHTNING STRIKE INSPECTION WAS COMPLIED WITH. THE AIRCRAFT WAS THEN RETURNED TO SERVICE. (TC NR 20060906026)

2007FA0000372	CESSNA	LYC	AMERIKING	BATTERY	LEAKING
5/2/2007	R182	O540J3C5		MN1300	ELT

BATTERIES LEAKED INSIDE ELT UNIT PREVENTING ELT OPERATION AND DESTROYING CONTACTS INSIDE UNIT. THIS IS ONE OF SEVERAL TIMES THIS PROBLEM HAS BEEN SEEN IN THE NEWER OR MORE RECENTLY MANUFACTURED BATTERIES THIS PARTICULAR SET HAD AN EXPIRATION OF 2012 AND HAD ONLY BEEN INSTALLED IN THE UNIT FOR ONE YEAR. RECOMMEND BAT REPLACEMENT EVERY 6 MONTHS UNTIL THIS PROBLEM IS ADDRESSED BY ELT MANUFACTURES OR THE BATTERY COMPANY NOTE OLDER BATTERIES DID NOT EXHIBIT THIS PROBLEM.

2007FA0000364	CESSNA	PWA	LANDING GEAR	MALFUNCTIONED
4/20/2007	S550	JT15D4		

EMERGENCY LANDING GEAR DEPLOYMENT SYSTEM INSPECTED DURING ROUTINE PHASE INSPECTION. EMERGENCY GEAR CABLES CHECKED FOR CORRECT RIGGING, AND EMERGENCY GEAR SYSTEM FUNCTION TESTED WITH AIRCRAFT ON JACKS. SYSTEM FUNCTION TESTED PROPERLY. PILOT ELECTED TO PERFORM IN FLIGHT CHECK OF SAME SYSTEM AND FOUND THAT MAIN GEAR WOULD NOT DEPLOY. PILOT EXTENDED GEAR USING NORMAL HYDRAULIC SYSTEM OPERATION AND LANDED WITHOUT INCIDENT. AC WAS FLOWN TO SERVICE CENTER FOR EVALUATION. (K)

2007FA0000359	CESSNA	CONT	FITTING	CRACKED
4/3/2007	T207A	TSIO520M	12320131	STABILIZER

FWD RT STABILIZER FITTING CRACKED. FOUND CRACKED FITTING UPON ANNUAL INSPECTION OF EMPENNAGE. (K)

2007FA0000399	CESSNA	CONT	MAGNETO	CORRODED
4/18/2007	T210N	TSIO520R	6320	ENGINE

EMERGENCY RETURN TO FIELD: INSPECTION REQUIREMENTS FOR MAGNETO (PN 6320) ARC NOT ADEQUATE TO INSURE PROPER VENTING (PRESSURIZED MAG). SB2-80C SPECIFIES ONLY EXTERNAL INSPECTION IS REQUIRED EVERY 100 HOURS AND AN INTERNAL INSPECTION AFTER 500 HOURS. THE SUBECT MAGNETOS WITH 525 AND 438 CONTAINED MOISTURE AND EXCESSIVE CORROSION INTERNALLY BECAUSE THE PREVIOUS REQUIREMENTS TO TEST PRESSURIZED MAGNETOS CONTAINED IN SB 1-88A DO NOT APPLY TO THE 6300 SERIES MAGNETOS. (K)

2007FA0000398	CESSNA	CONT	MAGNETO	CORRODED
4/18/2007	T210N	TSIO520R	6320	ENGINE

EMERGENCY RETURN TO FIELD: INSPECTION REQUIREMENTS FOR MAGNETO (PN 6320) ARC NOT ADEQUATE TO INSURE PROPER VENTING (PRESSURIZED MAG). SB 2-80C SPECIFIES ONLY EXTERNAL INSPECTION IS REQUIRED EVERY 100 HOURS AND AN INTERNAL INSPECTION AFTER 500 HOURS. THE SUBJECT MAGNETOS WITH 525 AND 438 CONTAINED MOISTURE AND EXCESSIVE CORROSION INTERNALLY BECAUSE THE PREVIOUS REQUIREMENTS TO TEST PRESSURIZED MAGNETOS CONTAINED IN SB 1-88A DO NOT APPLY TO THE 6300 SERIES MAGNETOS. (K)

CA070119009	CESSNA	CONT	SPAR	FAILED
1/16/2007	TU206G	TSIO520M	122210614	RT WING

(CAN) EDGE DISTANCE OF RIVETS ON LOWER FLANGE LESS THAN MINIMUM ALLOWED. REPLACEMENT OF PART REQUIRED TO REPAIR PROBLEM. (TC NR 20070119009)

CA070228003	CESSNA	CONT	CONTROL ARM	DEFECTIVE
2/28/2007	U206	IO520D	AT210937	GOVERNOR

(CAN) THE SUBJECT AIRCRAFT WAS CLIMBING OUT AFTER TAKEOFF AND EXPERIENCED A SIGNIFICANT LOSS OF CLIMB POWER RELATED TO A DROP IN ENGINE RPM FROM 2700 RPM TO 1600 RPM. THE PILOT EXECUTED ALL APPROPRIATE EMERGENCY PROCEDURES/ACTIONS WITH NO IMPROVEMENT. THE PILOT DECLARED AN EMERGENCY AND WAS ABLE TO MANEUVER THE AIRCRAFT BACK TO THE AIRPORT, LANDED WITHOUT FURTHER INCIDENT. UPON EXAMINATION, IT WAS DETERMINED THAT THE INTENTION OF THE DESIGN OF THE PROP GOVERNOR ARM ATTACHMENT WAS TO HAVE THE BOLT THAT COMPRESSES THE ARM ON TO THE SPLINED SHAFT WAS TO PASS THROUGH THE GROVE IN THE SHAFT THUS PREVENTING THE ARM FROM SEPARATING EVEN IF THE BOLT DOES NOT HAVE SUFFICIENT TORQUE. IN THIS CASE THE ARM IS MANUFACTURED IN SUCH A WAY THAT THE BOLT HOLE IS TOO FAR AWAY FROM THE SHAFT TO HAVE ITS DESIGNED INTERFERENCE. WHEN FOUND, THE PROP GOVERNOR ARM WAS STILL ATTACHED TO THE PROPELLER CONTROL CABLE & THE BOLT TO SECURE THE ARM TO THE SHAFT WAS STILL IN SAFETY. (TC NR 20070228003)

2007FA0000347	CESSNA	CONT	SCREW	DEPARTED
12/3/2006	U206F	IO520*	3A07000001	NLG

AIRCRAFT HAD GEAR UP LANDING, FOUND SCREW PN AN503-8-4 HAD FALLEN OUT. SCREW WAS TO BE SAFTIED, NO SAFETY WIRE FOUND. ONCE SCREW FELL OUT THE POWER PISTON HOUSING PN 3A07402-002 WAS ALLOWED TO FLEX DURING SUB CYCLES ALLOWING THE SCREW TO TEAR THE ORING ON THE HOUSING FLANGE AND PUMP ALL THE HYD (5606) FLUID OVERBOARD AND NOT ALLOWING THE MAIN GEAR THE EXTEND. THE SCREW HOLE WHERE THE SCREW FELL OUT ON THE PISTON HOUSING TORE OUT. REPLACED THE PISTON HOUSING PN 3A07000-001, ALL ORINGS AND INSTALLED NEW SCREWS PN AN503-8-4 AND SAFTIED. SWING LDG 6X`S AND RELEASED AIRCRAFT. (K)

CA070122009	CESSNA	CONT	CYLINDER	FAILED
1/17/2007	U206F	IO520F	EC649358CN	NR 4

(CAN) NR 4 CYILINDER FAILED, BURNING VARIOUS ENGINE COMPARTMENT WIRING AND DUCTING. (TC NR 20070122009)

050207	CIRRUS	CONT	CIRRUS	ROD END	BROKEN
5/2/2007	SR22	IO550*		649	CABIN DOOR

CABIN DOOR DEPARTED AIRCRAFT IN FLIGHT DUE TO THE ROD END HINGE FAILURE. IT APEARS THE ROD END FAILED DUE TO FATIGUE. THE ROD END SHOULD BE MADE OF A STRONGER MATERIAL.

2007FA0000375	CIRRUS	CONT	CONTROL CABLE	INTERFERENCE
4/27/2007	SR22	IO550*		AILERONS

DURING INSPECTION FOUND INTERFERENCE BETWEEN RUDDER/AILERON INTERCONNECT SYSTEM AND RT AILERON CABLE. CHECKED RIGGING AND FOUND CABLE CLAMP ON RT AILERON CABLE OUT OF POSITION. VISUAL INSPECTION INDICATES NO MOVEMENT BETWEEN CABLE AND CLAMP AND RECORDS REVIEW INDICATE THAT NO RIGGING HAS TAKEN PLACE SINCE THE AIRPLANE LEFT THE FACTORY.

CA070417002	CNDAIR	PWA	RIB	DAMAGED
4/17/2007	CL2151A10	CWASP	2151500080680	AILERON

(CAN) DAMAGE FOUND TO BOTH AILERONS ON THE (2) FIRST CENTER HINGE RIBS ASSEMBLY, ADJACENT TO THE FIXED STOPS. A/C HOURS; 4658.7, CYCLES; 2973 (TC NR 20070417002)

CA070226008	CNDAIR	PWA	SPAR CAP	CRACKED
2/26/2007	CL2151A10	CWASP	2151003268	RT WING

(CAN) WHILE PERFORMING AD CF92-26R1, A CRACK WAS DETECTED ON THE RT REAR LOWER SPAR CAP JUST OB OF RBL 51.00. WORK COMMENCED ON REPAIR IAW THE MFG SPEC. UPON REMOVAL OF REINFORCING STRIP (P/N 215-10032-76) AN ADDITIONAL CRACK WAS FOUND ON THE LOWER SPAR CAP AT RBL 49.50. FOLLOWING REMOVAL OF THE DAMAGED SPAR CAP AN ADDITIONAL CRACK WAS NOTICED ON THE WING SPAR WEB (P/N 215-10032-242) AT RBL 50.00 THAT EXTENDED FROM THE SECOND LOWER, WING TO FUSELAGE PICK UP ANGLE FASTENER HOLE THROUGH TO THE LOWER FASTENER HOLE AND OUT THE EDGE OF THE WEB. THESE CRACKS ARE BOTH LOCATED OUTSIDE OF THE DESIGNATED INSPECTION AREA. (TC NR 20070226008)

CA070202013	CNDAIR	PWA	PUMP	WORN
2/2/2007	CL2156B11215	PW123	65WE01042	HYDRAULIC SYS

(CAN) PUMP INSIDES COUPLING SPLINES BADLY WORN, OUT OF LIMITS. (TC NR 20070202013)

CA070221002	CNDAIR		ACTUATOR	FAILED
2/18/2007	CL600*		7663854	SLATS

(CAN) SLAT FAIL MESSAGE, UNABLE TO MOVE SLATS AND FLAPS ONLY MOVED TO 8 DEGREES. MDC CODE B1-007772 INDICATES JAMMED SLAT ACTUATOR AND AIRCRAFT REMOVED FROM SERVICE FOR INVESTIGATION. BOTH LEFT HAND OUTBOARD ACTUATORS NR 5 AND NR 6 REPLACED AND TEST COMPLETED SUCCESSFULLY. WILL ASK FOR STRIP REPORTS FROM MANUFACTURER. INFORMATION WILL BE UPDATED AS SOON AS IS AVAILABLE. (TC NR 20070221002)

CA070219003	CNDAIR		FLAP SYSTEM	JAMMED
2/18/2007	CL600*			TE FLAPS

(CAN) ON APPROACH, CREW RECEIVED SLATS FAIL MESSAGE, ALSO, FLAPS STOPPED AT 8 DEGREES. FLIGHT LANDED WITHOUT INCIDENT. INFORMATION WILL BE UPDATED AS SOON AS IS AVAILABLE. (TC NR 20070219003)

CA070219001	CNDAIR	GE	FAN BLADE	BENT
2/16/2007	CL6002B19	CF343A1		NR 2 ENGINE

(CAN) FEB 16/07, AIR TURN BACK. THE CREW REPORTED THAT AFTER TAKEOFF A LOUD RUMBLING NOISE WAS HEARD. CREW BELIEVED THAT ICE MAY HAVE BEEN INGESTED INTO THE RT ENGINE DURING LANDING ON THE PREVIOUS LEG INBOUND TO DESTINATION. MAINTENANCE CONFIRMED SEVERAL FAN BLADES WERE DAMAGED AT OUTER TIPS. THE FAN BLADES WERE REMOVED AND REPLACED AND A COMPRESSOR INSPECTION WAS CARRIED OUT WITH NFF. ENGINE RUNS WERE CARRIED OUT AND ALL PARAMETERS FOUND WITHIN LIMITS AND AIRCRAFT WAS RETURNED TO SERVICE. (TC NR 20070219001)

CA070222001	CNDAIR	GE	WIRE HARNESS	CHAFED
2/12/2007	CL6002B19	CF343A1	22858222801	NR 1 ENGINE

(CAN) DURING ROUTINE MAINTENANCE INSPECTION , FOUND WIRING HARNESS ON NR1 ENGINE FOR THRUST

REVERSER STOW SWITCH WIRING CHAFING ON EDGE OF LIGHTENING HOLE OF MOUNTING BRACKET. DAMAGED WIRING CUT OFF AND END RE-TERMINATED. MFG ILLUSTRATED PARTS CATALOG (CSP A-006) 78-37-01 FIG 1A PG 0 , ITEM 40 (BRACKET ASSY, STOW SWITCH MOUNTING). LIGHTNING HOLE ON THIS BRACKET CHAFED ON HARNESS FOR STOW SWITCH (TC NR 20070222001)

CA070222002	CNDAIR	GE	SKIN	DENTED
2/12/2007	CL6002B19	CF343A1	6001201687S	LT WING

(CAN) CREW REPORTED BIRDSTRIKE ON APPROACH, MAINTENANCE INSPECTION FOUND DENT IN LT WING LEADING EDGE APPROX 6 FT OB FROM FUSELAGE. DENT ALLOWABLE IAW SRM LIMITS. (TC NR 20070222002)

CA070207002	CNDAIR	GE	STRIKER	DAMAGED
1/31/2007	CL6002B19	CF343A1	600315351001	DOOR SEAL

(CAN) DURING A TYPE III REPAIR (MFG REO 601R-53-22-033) DUE TO A CRACK FOUND ON THE OUTER FLANGE OF THE PASSENGER DOOR FWD SEAL STRIKER, THE FORWARD SEAL STRIKER FLANGE WAS FOUND CRACKED IN THE RADIUS (OVER 3INCHES IN LENGTH) UNDER AN EXISTING REPAIR (REPAIR TYPE I, REO 601R-53-22-033). AFTER A VISUAL CHECK, THE AFT PASSENGER DOOR SEAL STRIKER (ALSO PREVIOUSLY REPAIRED TYPE I) WAS FOUND CRACKED IN THE RADIUS. (TC NR 20070207002)

CA070301002	CNDAIR	GE	FITTING	CRACKED
2/28/2007	CL6002B19	CF343A1		LANDING GEAR

(CAN) BOTH MAIN LANDING GEAR FITTING FOUND CRACKED ON NDT INSPECTION IAW ADCF-1999-32R3. MAIN LANDING GEAR WILL BE REPLACED. LT P/N 5321103 S/N PO-422V5Q, RT P/N 3521104 S/N PO-BBBB10. (TC NR 20070301002)

CA070302001	CNDAIR	GE	WIRE	DAMAGED
2/28/2007	CL6002B19	CF343A1		

(CAN) AFTER A NORMAL LANDING AND WHILE TAXING TO THE GATE, THE FLT CREW REPORTED INTERMITTENT ARCING AND SMOKE COMING FROM BEHIND THE CAPTAINS SIDE CB PANEL. AIRCRAFT DEPLANED NORMALLY. ELECTRICAL POWER WAS SHUT DOWN AND FIRE CREW WERE CALLED TO CHECK OF FIRE. NO FURTHER REPORTS OF SMOKE/FIRE AFTER POWER WAS REMOVED FROM THE AIRCRAFT. UPON FURTHER INVESTIGATION, MAINTENANCE NOTED THAT (2) BUS FEEDER WIRES BECAME UNSECURED AND ARCED ON THE BULKHEAD WHICH RUNS PARALLEL TO B SCREEN TRAILING EDGE ON CAPTAINS SIDE AND APPROX FS280. DAMAGE WAS NOTED TO WIRE TERMINAL ENDS AND WIRE INSULATION AND WELL AS BURN MARKS ON BULKHEAD/STRINGER AND 2 RIVETS. NO DAMAGE TO EXTERNAL FUSELAGE SKIN. BURN ON BULKHEAD IS 1 INCH BY .5 INCH AND IS IRREGULAR IN SHAPE. WIRE IDENT PA204E8 FROM CBP1 H12 TO 1G14 IS A JUMPER. ALSO DAMAGED IS WIRE IDENT PA204D8 FROM CBP1 H12 TO TB41 LUG 1 (APPROX 6 FEET LONG). DAMAGED WIRING REPAIRED IAW AMM AND AIRCRAFT FERRIED TO FOR REPAIR OF STRUCTURAL DAMAGE IAW SRM. (TC NR 20070302001)

CA070201004	CNDAIR	GE	CNDAIR	WIRE	BROKEN
2/1/2007	CL6002B19	CF343A1			FLAP SYSTEM

(CAN) APPROX 1 MILE OUTSIDE THE OUTER MARKER AT 3000 AGL, THE AMBER FLAP CAUTION LIGHT ILLUMINATED. THE CREW SELECTED FLAP 20 AND THE FLAPS WENT TO 20. WHEN THE LIGHT ILLUMINATED THE CREW WENT THROUGH THEIR EMERGENCY CHECKLIST AND CARRIED OUT AN UNEVENTFUL LANDING. THE AIRCRAFT WAS THEN FERRIED FOR MAINTENANCE. ALL FLAP ACTUATORS WERE PURGED AND SERVICED WITH FRESH GREASE IAW MM TASK 12-20-29-640-805. BOTH BPSU'S WERE REPLACED IAW MM TASK 27-51-10-000-80. FLAP OPERATIONAL TESTS AND A TEST FLIGHT WERE CARRIED OUT WITH NO FAULTS FOUND. JANUARY 29/2007 IN HOUSE TASK RJ2-275002 FLAP MOISTURE PREVENTION PROGRAM WAS CARRIED OUT. JANUARY 30/2007 THE AIRCRAFT FLEW FOUR LEGS AND ON THE FORTH LEG, THE FLAPS FAILED AT 30DEG ON APPROACH. TROUBLESHOOTING WAS CARRIED OUT BY MAINTENANCE AND IT WAS DISCOVERED WIRE 2CE31C22 ORG AT PIN NR4 ON CONNECTOR 2P5CE AT RT WHEEL WELL AREA FOUND BROKEN. THE WIRE WAS SPLICED (6) INCHES FROM THE CONNECTOR AS A TEMP REPAIR. THE RT BPSU WAS REPLACED AND FLAPS RE-RIGGED. A TEST FLIGHT WAS CARRIED OUT FEBRUARY 1/2007 AND FLAP SYSTEM CHECKED SERVICEABLE. (TC NR 20070201004)

CA070202002	CNDAIR	GE	HONEYWELL	LINE	CHAFED
1/26/2007	CL6002B19	CF343A1	38004883	38834491	APU FUEL

(CAN) JANUARY 296/2007 DEFECT 591259, THERE WAS A FUEL SMELL COMING FROM THE APU BLEED. THE APU WAS DEFERRED AND INHIBITED IAW MEL 49-10-01-1. JANUARY 29/2007 MAINTENANCE REPLACED THE ECU FOR TROUBLESHOOTING, BUT THERE WAS NO FIX. FEBRUARY 01/2007 FURTHER TROUBLESHOOTING CARRIED OUT BY MAINTENANCE AND APU FUEL LINE FOUND TO BE LEAKING ABOVE THE EXCITER BOX. THE ADEL CLAMP HAD CHAFED THROUGH THE LINE. FUEL LINE PN 3883449-1 WAS REPLACED, NEW CLAMPS INSTALLED AND APU LEAK AND FUNCTION CHECKED SERVICEABLE. APU HOUR SINCE OVERHAUL ARE 3254 AND CYCLES 2660. (TC NR 20070202002)

CA070131003	CNDAIR	GE	FLAP SYSTEM	FAILED
1/30/2007	CL6002B19	CF343A1		TE FLAPS

(CAN) THE CREW REPORTED THAT UPON APPROACH FLAPS 8 DEGREES WERE SELECTED OKAY. UPON FLAP 20 DEGREE SELECTION, THE FLAPS DID NOT MOVE AND THE FLAP FAIL CAUTION LIGHT ILLUMINATED. THE FLAPS LOCKED AT 8 DEGREES. THE AIRCRAFT IS CURRENTLY IN LINE, MAINTENANCE IS TROUBLESHOOTING. (TC NR 20070131003)

CA070128002	CNDAIR	GE	APU	CONTAMINATED
1/26/2007	CL6002B19	CF343A1		

(CAN) SHORTLY AFTER DEPARTURE, THE CREW NOTICED A LAV SMOKE WARNING AND SMOKE WAS VISIBLE IN THE CABIN FOR 3-4 MINUTES THEN IT DISSIPATED. SMOKE WAS BLUISH IN COLOR AND OILY SMELLING. (2) MAINTENANCE PERSONNEL WERE ON BOARD, INITIALLY THEY THOUGHT SINCE THE AIRCRAFT HAD JUST BEEN DE-ICED WITH ENGINES AND APU RUNNING THAT DE-ICE FLUID WAS THE CAUSE SO A DECISION WAS MADE TO CONTINUE. THE COALESER BAGS WERE INSPECTED AND REPLACED. AFTER ENGINE RUNS AND FURTHER TROUBLESHOOTING IT WAS NOTICED THAT NR 2 PRSOV IS RUNNING AT 38 TO 41 PSI AND MAY HAVE CAUSED DAMAGE TO NR 2 ACM. FURTHER TROUBLESHOOTING ON GOING. (TC NR 20070128002)

CA070123002	CNDAIR	GE	FLAP SYSTEM	JAMMED
1/22/2007	CL6002B19	CF343A1		TE FLAPS

(CAN) AIRCRAFT HAD A FLAPLESS LANDING, AFTER FLAP SELECTION 8, LT FLAP INDICATED ZERO, RT UNKNOWN, CREW THEN SELECTED TO 20 AND FLAPS TRAVELED TO APROX 5 DEGREES INDICATION WAS GREEN TRAVELED TO 5 DEGREES AND THEN TURNED WHITE. CREW THEN RETRACTED FLAPS BACK TO FLAP ZERO AND LANDED FLAPLESS, FLAP FAIL CAUTION WAS NOT ILLUMINATED. FERRY FLIGHT FOR TROUBLESHOOTING. T/S C/O AND ALL DCU`S ARE DISPLAYING THE SAME INFO, APPEARS TO BE POTENTIOMETER FAIL. WAITING FOR PART TO BE INSTALLED. (TC NR 20070123002)

CA070123005	CNDAIR	GE	ACTUATOR	WORN
1/18/2007	CL6002B19	CF343A1	852D10019	TE FLAPS

(CAN) ON FINAL APPROACH CREW SELECTED FLAPS 20 DEGREES. FLAPS STUCK AT 8 DEGREES AND CREW RECEIVED A FLAP FAIL MESSAGE. CREW BROKE OFF APPROACH AND CONTACTED DISPATCH. AIRCRAFT SUBSEQUENTLY LANDED WITHOUT INCIDENT WITH FLAPS AT 8 DEGREES. MAINTENANCE TROUBLESHOOTING FOUND EXCESSIVE LINEAR PLAY IN THE LT AND RT IB FLAP ACTUATORS. ACTUATORS REPLACED (RT IB ACTUATOR PN CL600-2B19, S/N 5051. TSN 5321:44 HOURS, TSO 5321:44, CYCLES 4332) MOD SUM IS601R27530052 REV B: FLAP DRIVE SYSTEM, ALTERNATE METALLIC SEAL FOR FLEXIBLE DRIVE SHAFT COMPLETED. SYSTEM RE-GREASED. FLAP SYSTEM RIGGED IAW AMM 27-51-10. SUCCESSFUL TEST FLIGHT COMPLETED AND AIRCRAFT RETURNED TO SERVICE. (TC NR 20070123005)

CA070123013	CNDAIR	GE	HOSE	LEAKING
1/17/2007	CL6002B19	CF343A1	AE2460260G0074	HYD SYSTEM

(CAN) ON FINAL APPROACH WITH GEAR DOWN AND AT 2000FT THE MESSAGE HYD NR3 LOW PRESS CAME ON EICAS WITH THE HYDRAULIC NR3 RESERVOIR LEVEL AT 0 PERCENT. CREW COMPLIED WITH QRH. THE AIRCRAFT LANDED NORMALLY AND DEPLOYED THE THRUST REVERSER , THE GROUND SPOILERS DEPLOYED AND OPERATED BRAKES . THE AIRCRAFT AT A SPEED AROUND 70 KTS SUDDENLY DIVERTED ON THE RT END SIDE . THE AIRCRAFT LEFT THE SIDE OF THE RUNWAY BY 13 METER AND ENDED UP ON THE GRASS AFTER THE A/C COVERED 50/55 METERS (TC NR 20070123013)

CA070123008	CNDAIR	GE	FAIRLEAD	WORN

1/23/2007	CL6002B19	CF343A1	TA305002403	HYD LINE

(CAN) DURING MAINTENANCE INSPECTION , FOUND AFT FUSELAGE EQUIPMENT BAY HYDRAULIC LINE CLAMPS (FAIRLEAD), WITH CENTER (PRESSURE LINE) HOLES WORN THROUGH RUBBER/SILICON COMPOUND AND ALLOWING TUBING TO CHAFE ON METAL PORTION OF BLOCK. BLOCK PN TA3050024-03 CONSISTS OF (2) HALVES (INK STAMP P/N B0305103-002 OR 601R75126-3). CLAMP HALVES REPLACED. (TC NR 20070123008)

CA070124001	CNDAIR	GE	COMPUTER	MALFUNCTIONED
1/22/2007	CL6002B19	CF343A1	73664310	FUEL QUANTITY

(CAN) JUST PRIOR TO TOP OF CLIMB, LEFT FUEL QUANTITY AND TOTAL FUEL QUANTITY STARTED TO REDUCE, FOLLOWED BY FUEL IMBALANCE MESSAGE. CREW ELECTED TO RETURN TO DEPARTURE AIRPORT. ON FINAL APPROACH FUEL INDICATIONS RETURNED TO NORMAL. FUEL SYSTEM INSPECTED, WITH NO LEAKAGE FOUND. AIRCRAFT DISPATCHED UNDER MEL. ON NEXT MAINTENANCE VISIT FUEL COMPUTER REPLACED. (TC# 20070124001)

CA070118008	CNDAIR	GE	ACTUATOR	CONTAMINATED
1/17/2007	CL6002B19	CF343A1	852D10019	TE FLAPS

(CAN) ON APPROACH CREW REPORTED A FLAPS FAIL MESSAGE AFTER SELECTION TO 8 DEGREES. FLIGHT COMPLETED A FLAPLESS LANDING WITHOUT INCIDENT. AIRCRAFT THEN COMPLETED A FERRY FLIGHT. TROUBLESHOOTING OF FAULT CODES AND REPAIRS CURRENTLY ONGOING BY MAINTENANCE. THE RT IB FLAP ACTUATOR WAS REPLACED DUE TO NOT ACCEPTING GREASE. SUSPECT MOISTURE INGRESS HAD FROZEN INSIDE ACTUATOR. AS PART OF REPAIRS MOD IS601R227530052 REV B: FLAP DRIVE SYSTEM-ALTERNATE METALLIC SEAL FOR FLEXIBLE DRIVE SHAFT WAS INCORPORATED. (TC NR 20070118008)

CA070118009	CNDAIR	GE	LINE	LOOSE
1/16/2007	CL6002B19	CF343A1	AE7090072	NR 2 EDP

(CAN) ENROUTE CREW ADVISED THAT THEY HAD LOST NR 2 HYDRAULIC SYSTEM AND WERE DIVERTING. CREW DECLARED AN EMERGENCY AND ADVISED PASSENGERS OF REASON. WHEN THE INCIDENT HAPPENED THE CREW HAD A HYD 2 LOW PRESSURE MESSAGE, WHEN THEY TURNED ON NR 2 PUMP (HYD PUMP 2A) MESSAGE WAS CONTINUOUSLY ON. A FEW MINUTES LATER ALL NR 2 HYD QUANTITY WAS LOST. MAINTENANCE INSPECTION REVEALED THAT THE QUICK DISCONNECT FITTING ON THE CASE DRAIN LINE TO THE NR 2 PUMP WAS LEAKING AROUND THE BASE OF THE COUPLER. ONCE ALL THE FLUID LEAKED OUT IT STARVED THE PUMP CAUSING IT TO MAKE METAL CAUSING ENGINE VIBRATION AND EVENTUALLY SEIZE. THE CASE DRAIN LINE, NR2 EDP, PRESS AND CASE DRAIN FILTERS WERE REPLACED AND AIRCRAFT WAS FUNCTION CHECKED SERVICEABLE. AT THE TIME OF THE INCIDENT THE NR2 EDP HAD ONLY 58:39 HOURS SINCE REPAIR. (TC NR 20070118009)

CA070405009	CNDAIR	GE	RELAY	BURNED
4/3/2007	CL6002B19	CF343A1	VS643	JUNCTION BOX NR6

(CAN) DURING CRUISE IB, FLIGHT CREW NOTICED AN AC ESSENTIAL BUS MESSAGE FOLLOWED BY A POPPING SOUND AND A BURNED ODOR ON THE FLT DECK. LOOKED AT AC ELECTRICAL SYNOPTIC PAGE AND EVERYTHINGS WAS NORMAL BUT THE F/A NOTICED THAT THE EMERGENCY LIGHTS WERE ON. FLIGHT CREW APPLIED QRH AND CARRIED ON FLIGHT. ON ARRIVAL AT THE GATE, BURNED ODOR WAS STRONGER AND THEY SHUTDOWN EVERYTHING INCLUDING THE APU. AFTER INVESTIGATION, MAINTENANCE FOUND AC ESSENTIAL RELAY K1XD BURNED IN JB6 AND CARBON TRACES WERE FOUND ON THE RELAY SOCKET AND JB6 BRACKET/CASING. REF LOG NR 565535 AC ESSENTIAL SENSE RELAY K1XD P/N VS 643 AND RELAY SOCKET PN S0-1021-7127 WERE REPLACED AND THE AIRCRAFT RETURNED TO SERVICE. (TC NR 20070405009)

CA070416005	CNDAIR	GE	CONNECTOR	CONTAMINATED
4/13/2007	CL6002B19	CF343A1		SELECTOR VALVE

(CAN) ON APPROACH NOSE LANDING GEAR DID NOT EXTEND. CREW CARRIED OUT A GO-AROUND AND COMPLETED A MANUAL EXTENSION. THE GEAR LOWERED AND LOCKED-CREW RECEIVED 3 GREENS IN THE COCKPIT. THE AIRCRAFT LANDED WITHOUT INCIDENT. MAINTENANCE WAS DISPATCHED TO TROUBLESHOOT. PSEU CODES READ AND FORWARDED TO TECH OPS. AFTER CONSULTATION WITH TECH OPS, SUSPECT THE NLG SELECTOR VALVE AT FAULT. AFTER FURTHER INSPECTION IT WAS NOTED THAT THE NLG SELECTOR VALVE HAD A SLIGHT LEAK NR THE SOLENOID CONNECTOR PLUG WAS CONTAMINATED WITH HYD FLUID. THE SELECTOR

VALVE WAS REPLACED AND GEAR SWINGS WERE CARRIED OUT WITH NFF AND A/C WAS RETURNED TO SERVICE WITHOUT ANY FURTHER INCIDENTS. (TC NR 20070416005)

CA070409002	CNDAIR	GE	PLUG	MISSING
4/4/2007	CL6002B19	CF343B1	R1309P216	RT EDP

(CAN) AFTER TAKEOFF FROM SOUTH BEND (SBN), THE AIRCRAFT CLIMBED TO FL 290. SHORTLY AFTER REACHING CRUISE ALTITUDE, THE RT ENGINE OIL PRESS WARNING ILLUMINATED FOLLOWED BY A DROP IN THE OIL PRESSURE ON THE RT OIL PRESSURE GAUGE. THE FLIGHT CREW PERFORMED THE QRH PROCEDURES AND REDUCED POWER ON THE RT ENGINE. SEEING THAT THE OIL PRESSURE CONTINUED TO DROP, THE CAPTAIN ELECTED TO SHUTDOWN THE ENGINE. AN EMERGENCY WAS DECLARED AND AN UNEVENTFUL APPROACH AND LANDING WAS MADE AT MSP. UPON LANDING, MAINTENANCE FOUND THAT THE AIRCRAFT HAD A MEL OPENED FOR NR 2 ENGINE DRIVEN HYDRAULIC PUMP. FURTHER INVESTIGATION REVEALED THE RT EDP HAD NOT BEEN PROPERLY MEL`D AND THAT THE OIL LOSS WAS THE RESULT OF A MISSING SPLINE PLUG AND O-RING WHICH ARE PART OF THE MEL KIT FOR EDP`S. MISSING SPLINE PLUG AND O-RING. NOT INSTALLED DURING DEFERRAL OF THE RT EDP LIKE IT SHOULD HAVE IAW AMM AND MFG PROCEDURES. SPINE PLUG AND O-RING (PARTS OF EDP BLANKING KIT FROM GE) SPLINE PLUG P/N: 4025T07P02, O-RING P/N: R1309P216 (TC NR 20070409002)

CA070404009	CNDAIR	GE	CONTROL UNIT	MALFUNCTIONED
4/1/2007	CL6002B19	CF343B1	706010	HORIZONTAL STAB

(CAN) SHORTLY AFTER TAKEOFF, FLIGHT EXPERIENCED A HSTA RUNAWAY. ACFT HAD JUST DEPARTED RUNWAY AND FLAPS WERE RETRACTED TO 0 DEGREES. AUTOPILOT DISENGAGED. TRIM SELECTION INPUT MADE. STABILIZER TRIM CONTINUED TO RUN & ASSOCIATED AURAL ALERT SOUNDED. IMMEDIATE ACTION CHECKLIST WAS COMPLETED, AS WAS QRH PROCEDURE. MODERATE CONTROL PULL FORCES WERE REQUIRED TO FLY ACFT AT 10,000 & 250 KNOTS. CREW USED ACARS SYSTEM TO CALCULATE A WEIGHT & BALANCE, & REDISTRIBUTED CABIN LOAD TO ALLEVIATE CONTROL FORCES. ICE ENCOUNTERED AT 10,000 FT & REQUIRED DESCENT TO 8,000 FT. EMERGENCY DECLARED. ACFT RETURNED. FLAPS SELECTED TO 20 DEGREES WHILE BETWEEN 8000 & 6000 FT. CONTROL FORCES WERE SIGNIFICANTLY LIGHTER ONCE FLAPS SELECTED. AN INCREASE IN PULL FORCES WAS REQUIRED ONCE GEAR SELECTED DOWN. AN UNEVENTFUL LANDING, FLAPS 20 DEGREES IAW QRH, NO REPORTED INJURIES.

CA070404003	CNDAIR	GE	WIRE HARNESS	DAMAGED
4/3/2007	CL6002B19	CF343B1	UK	RUDDER POSITION

(CAN) DURING AN INSPECTION, THE RUDDER POSITION TRANSMITTER HARNESS WAS FOUND TO BE DAMAGED. THE CAUSE OF THE DAMAGE WAS FOUND TO BE IMPROPER ROUTING BY COMPARING WITH ANOTHER A/C S/N 7163. THE ACTUAL ROUTING DRAWING WHERE REQUESTED FROM BOMBARDIER AND THE HARNESS WILL BE REPAIRED AND REROUTED PROPERLY. (TC NR 20070404003)

CA070404011	CNDAIR	GE	APU	FAILED
3/30/2007	CL6002B19	CF343B1	38004883	

(CAN) TECHNICIAN WAS TROUBLESHOOTING THE APU FOR APU AUTO SHUTDOWN, LOSS OF APU DOOR POSITION ON STATUS PAGE. ECU CODE: 109,224,91 MAINTENANCE FOUND THE ELECTRICAL CONNECTOR FOR OIL TEMP SENSOR PARTIALLY INSTALLED (CODE 91). RESECURED THE CONNECTOR AND PROCEEDED TO START THE APU. AT THAT TIME NO FUEL LEAK / OIL LEAK WERE NOTED IN THE APU ENCLOSURE. START THE APU WITH NO PROBLEM AND WITH BOTH A/C PACKS RUNNING, A STRONG SMELL OF FUEL IN THE COCKPIT AND GALLEY AREA WAS NOTED. SOME FUEL ON THE GROUND AT THE DRAIN AREA WAS NOTED. SHUTDOWN THE APU, CLIMBED IN THE AFT EQUIPMENT BAY, START TO OPEN THE OIL SERVICING PANEL ONCE A FEW FASTENERS WERE LOOSE THEN A FIRE FLARED UP. ASKED THE CREW TO DISCHARGE THE ONBOARD FIRE EXTINGUISHING AGENT. TECHNICIAN GOT A DRY CHEMICAL AGENT FIRE EXTINGUISHER AND DISCHARGE IN THE ENCLOSURE. THE EVENT TOOK PLACE IN CHARLOTTE NC. DURING THAT NIGHT THE APU WAS REMOVED. ACCORDING TO TECHNICIAN THERE WAS SOME FUEL ON GROUND AT DRAIN LOCATION. NO REPORTED BY PSA. THEY R & R THE APU ASSEMBLY. NO DAMAGE REPORTED TO THE EXHAUST/INTAKE ASSEMBLY. PSA REPORT SOME DAMAGE TO THE RIGHT ELEVATOR CABLE. REO WAS PROVIDED 601R27-31-013 (TC NR 20070404011)

CA070119001	CNDAIR	GE	WINDOW	CRACKED
1/17/2007	CL6002B19	CF343B1	NP1393229	COCKPIT

(CAN) SEVERAL CRACKS IN LT SIDEWINDOW INNER AND CENTER. A/C AOG LT SIDEWINDOW CHANGED ACC AMM.

ALL TESTS SATISFIED (TC NR 20070119001)

CA070122005	CNDAIR	GE	BUSHING	LACK OF LUBE
1/19/2007	CL6002B19	CF343B1	600210713	HORIZONTAL STAB

(CAN) CREAKING NOISE HEARD WHEN HORIZONTAL STABLIZER WAS CYCLED THROUGH FULL RANGE. HORIZONTAL STAB HINGE BUSHINGS.THEY WERE FOUND DRY. IPC REF:27-43-01-01, ITEM NR 60. PARTS HAND LUBED AND RE-ASSEMBLED IAW MM TASK NR 000-13-320-121. CURRENT INTERVAL FOR THIS TASK IS 10,000 FLT.HRS (TC NR 20070122005)

CA070122006	CNDAIR	GE	BUSHING	LACK OF LUBE
1/21/2007	CL6002B19	CF343B1	600210713	HORZONTAL STAB

(CAN) CREAKING NOISE HEARD WHEN THE HORIZONTAL STABILIZER WAS CYCLED THROUGH FULL RANGE. AFT FITTING ON THE HORIZONTAL STABILIZER DISASSEMBLED. BUSHING WAS FOUND DRY (NO LUBRICATION). PARTS CLEANED, INSPECTED, HAND LUBED AND RE-ASSEMBLED IAW MM TASK NR 000-12-320-121. CURRENT INTERVAL FOR THIS TASK IN THE MANUAL IS 10,000 FLIGHT HOURS. (TC NR 20070122006)

CA070118002	CNDAIR	GE	FLAP SYSTEM	MALFUNCTIONED
1/17/2007	CL6002B19	CF343B1		TE FLAPS

(CAN) THE CREW REPORTED A FLAP FAIL MESSAGE ON APPROACH. THE CREW SELECTED FLAP 8 AND FLAP FAIL MESSAGE CAME ON IMMEDIATELY AND THE FLAPS FROZE AT 0 DEGREES INDICATED. ON THE GROUND A CB RESET WAS CARRIED OUT AND THE CODES WERE OBTAINED . THE AIRCRAFT WAS FERRIED WHERE AN INVESTIGATION IS STILL ONGOING BY LINE MAINTENANCE (TC NR 20070118002)

CA070413001	CNDAIR	GE	COWLING	DEPARTED
4/7/2007	CL6002B19	CF343B1		THRUST REVERSER

(CAN) A/C EXPERIENCED A THRUST REVERSER UNLOCK IN FLIGHT AT A CRUISE FLIGHT LEVEL OF 16000 FEET WITH AN APPROXIMATE SPEED OF 280 KNOTS. A SMALL VIBRATION IN THE AIRFRAME WAS FELT BY THE CREW PRIOR TO RECEIVING THE (REVERSER UNLOCK) MSG, FOLLOWED BY A LOUD BANG, WITH THE AIRCRAFT PITCHING UP AND ROLLING LT. THE CREW STOWED THE REVERSER AND VIBRATIONS SUBSEQUENTLY STOPPED. UPON LANDING INTO ORD UNDER A DECLARED EMERGENCY, IT WAS NOTE THAT T/R TRANSLATING COWLS WERE MISSING, ALONG WITH THE STRUCTURAL DAMAGE TO THE VERTICAL AND HORIZONTAL STAB. LIST OF AFFECTED COMPONENT TO FOLLOW. (TC NR 20070413001)

CA070426002	CNDAIR	GE	PUMP	LEAKING
4/24/2007	CL6002B19	CF343B1	6078T39P04	FUEL SYSTEM

(CAN) DURING ENGINE START UP, GROUND CREW OBSERVED A LEAK COMING FROM BELOW THE ENGINE NR 2. LINE MAINTENACE FOUND A FUEL LEAK FROM A MICROSCOPIC PIN HOLE CLOSE TO A PLUGGED FITTING ADAPTOR ON ENGINE NR 2 FUEL PUMP AFT CASING. THE EXACT PIN HOLE LOCATION WAS NOT FOUND DUE TO THE HIGH FUEL PRESSURE MIST. FUEL PUMP SN CGWT0202. (TC NR 20070426002)

CA070126013	CNDAIR	GE	FAN	DISLODGED
1/26/2007	CL6002B19	CF343B1		ENGINE

(CAN) THE NR 1 ENGINE FAN DISLODGED ITSELF FROM THE ENGINE AND TORE OFF THE INLET AND FAN CASING. IT ALSO DID EXTENSIVE DAMAGE TO THE PYLON AND THE FUSELAGE. NTSB IS ON SITE FOR THE INVESTIGATION. MORE INFORMATIOON TO FOLLOW ONCE AVAILABLE. (TC NR 20070126013)

CA070202018	CNDAIR	GE	WHEEL	DAMAGED
2/1/2007	CL6002B19	CF343B1	50105711	MLG

(CAN) DURING ROTATION THE A/C PULLED TO THE LT ON CLIMB OUT , ASSOCIATED WITH SEVERE VIBRATION. THE FLIGHT CREW DECIDED TO DIVERT THE A/C. UPON LANDING THE ROB TIRE DEFLATED. UPON INVESTIGATION, THE FOLLOWING WAS FOUND . THE INNER RT MAIN WHEEL CORD WAS DAMAGED AND DEFLATED. (FROM ORIGINAL REPORT ON T/O. BOTH MAIN WHEEL`S WERE REPLACED . THE OUTER RT MAIN WHEEL WAS DAMAGED ON LANDING. THE RT INNER FLAP WAS DAMAGED BY THE TIRE SEPARATION NR REPLACED . THE AFT FUSELAGE BODY FAIRING WAS SLIGHTLY DAMAGED AND REPAIRED UNDER REO 601R-53-

82-267(500 FT/HRS) (TC NR 20070202018)

CA070302002	CNDAIR	GE	COWLING	DEPARTED
2/25/2007	CL6002B19	CF343B1		LT NACELLE

(CAN) FLIGHT 3808, REPORTED A LOUD NOISE SHORTLY AFTER DEPARTURE, ON LANDING DISCOVERED COWLING MISSING AND UNKNOWN DAMAGE TO HORIZONTAL STABILIZER, NO REPORTED INJURIES, SN 7849 (REG N456ZW). WHAT COLLATERAL DAMAGE TO HZ STAB AND OTHER AREAS? HZ STAB LEADING EDGE AND HZ STAB CENTER BULLET CAP SIGNIFICANT IMPACT DAMAGE ASSUMED FROM LT UPPER FAN COWL DEPARTING THE AIRCRAFT. WHAT POINT IN DEPARTURE WAS (LOAD NOISE) HEARD? (LOUD NOISE) ASSUMED TO BE (CARGO SHIFT) NOW SUSPECTED AS COWL DEPARTURE AT 2800 FEET ON INITIAL CLIMB OUT, ENROUTE. BECAUSE PILOTS ASSESSED NOISE TO BE (CARGO SHIFT) THEY ELECTED TO CONTINUE. LT UPPER FAN COWL WAS RECOVERED BY AND CURRENTLY RETAINED BY US COAST GUARD FROM LOCATION OUTSIDE AIRPORT PERIMETER. PICTURES OF RECOVERED COWL PROVIDED BY US COAST GUARD. DOES SEEM SIMILAR TO PREVIOUS PWG REPORTED AND DISCUSSED FAN OR CORE COWL SEPARATION EVENTS BOTH (MAINT ERRORS) AND OTHER POSSIBLE CAUSES. THIS AIRCRAFT HAD PREVIOUS OVERNIGHT MAINTENANCE, INCLUDING LT UPPER FAN COWL REMOVAL AND REATTACHMENT. THIS WAS FIRST FLIGHT POST MAINTENANCE. PICTURES OF LT UPPER FAN COWL RECOVERED BY US COAST GUARD AND CONDITION OF COWL FASTENER LOCATIONS ON THE POWER PLANT ARE CONSISTENT WITH SOME FASTENERS NOT BEEN LOCKED. PICTURES OF RECOVERED LT FAN COWL SEEM TO INDICATE SECONDARY DAMAGE CONSISTENT WITH COWL COLLIDING WITH HZ STAB LEADING EDGE AND HZ STAB CENTER BULLET FAIRING POST SEPARATION FROM LT NACELLE. WAITING ADDITIONAL DETAILS. (TC NR 20070302002)

CA070312005	CNDAIR	GE	HOUSING	CRACKED
2/25/2007	CL6002B19	CF343B1	1196411	ECAPE HATCH

(CAN) CREW ESCAPE HATCH HANDLE HOUSING FOUND CRACKED AND OUTER HANDLE WAS CORRODED. THE PART OF THE HOUSING THAT FITS INSIDE OF THE INNER HANDLE WAS CRACKED COMPLETELY OFF. (TC NR 20070312005)

CA070206003	CNDAIR	GE	COVER	DISLODGED
2/4/2007	CL6002B19	CF343B1		AGB

(CAN) APPROX 10 MINS INTO THEIR DESCENT, THE NR 1 OIL PRESSURE WARNING LIGHT ILLUMINATED. THE NR 1 OIL PRESSURE READ 0. THE CREW REFERENCED THEIR CHECKLIST AND SHUTDOWN THE ENGINE. THE CREW ANNOUNCED TO THE PAX THAT DUE TO LOW OIL PRESSURE THEY WERE GOING TO SHUT DOWN AN ENGINE. MAINTENANCE CHECKED AND CLEANED TRANSDUCER CONNECTOR PLUGS, OIL TANK AND ASSOCIATED PLUMBING. THE ONLY ANOMALY NOTED WAS THE PLUG ON THE ACCESSORY GEAR BOX WAS NOT PROPERLY SECURED. THE CIRCLIP WAS OFF AND THE PLUG DISLODGED SOMEWHAT. THERE WAS NO EVIDENCE OF MASSIVE OIL LOSS, BUT SUSPECT WITH CAP OFF ENGINE WAS PROBABLY SUCKING AIR, AND NOT PRESSURIZING ACCESSORY GEAR BOX PROPERLY. CIRCLIP SECURED. IDLE AND HIGH POWER RUNS COMPLETED SUCCESSFULLY. (TC NR 20070206003)

CA070205002	CNDAIR	GE	VANE	FAILED
2/3/2007	CL6002B19	CF343B1	0861HB	AOA

(CAN) DURING CLIMB OUT STALL FAIL CAUTION MESSAGE ILLUMINATED. CREW UNABLE TO RESET DURING FLIGHT. CREW ELECTED TO LAND AT ENROUTE MAINTENANCE BASE. MAINTENANCE REPLACED RT AOA VANE, FUNCTION CHECKED AND AIRCRAFT RETURNED TO SERVICE (TC NR 20070205002)

CA070205003	CNDAIR	GE	ACTUATOR	FAILED
2/3/2007	CL6002B19	CF343B1		TE FLAP

(CAN) ON APPROACH, CREW SELECTED FLAP 8 AND RECEIVED A (FLAP FAIL) MESSAGE. FLAP FAILED AT 0. CREW ADVISED ATC AND DECLARED EMERGENCY. LANDING WAS UNEVENTFUL. (TC NR 20070205003)

CA070208001	CNDAIR	GE	CONTROL LEVER	DAMAGED
2/7/2007	CL6002B19	CF343B1	7805013	TE FLAP CONTROL

(CAN) AFTER LANDING WITH FLAPS SELECTED TO 45 DEGREES, THE CREW SELECTED FLAPS FROM 45 TO 20 DEGREES AND THE FLAPS DID NOT MOVE. CAPTAIN PUT THE FLAPS BACK TO 45 DEGREES. FECU (FLAPS

ELECTRONIC CONTROL UNIT) CODES RETRIEVED BY MAINTENANCE POINTED OUT TO THE FLAP CONTROL LEVER WHICH WAS REPLACED. (TC NR 20070208001)

CA070128001	CNDAIR	GE	BEARING SEAL	LEAKING
1/25/2007	CL6002B19	CF343B1		NR 2 ENGINE

(CAN) REPORTS OF LAV SMOKE CAUTION MSG COMING ON. PROBLEM APPEARS TO HAVE BEGUN ON DEC 5,2006 FLT. 8620, ON CLIMB-OUT, CREW RECEIVED A LAV SMOKE DETECT CAUTION LIGHT, FA CHECKED LAV NO SMOKE WAS EVIDENT, FLIGHT RETURNED TO DEPARTURE. A/C WAS DE-ICED PRIOR TO DEPARTURE AND DE-ICE FLUID WAS THE SUSPECTED CAUSE. BOTH COALESER BAGS WERE REPLACED AND GROUND RUNS WERE CARRIED OUT. A 2ND EVENT OCCURRED ON THE GROUND , DEC 5,2006, LAV SMOKE MSG CAME ON FOR 30 SEC'S THEN DID NOT COME ON AGAIN, C/B'S WERE RESET AND A/C WAS POWERED DOWN AND RESET, FUNCTION CHECKED SERVICEABLE. 3RD EVENT, JANUARY 17, 2007, FLT. 7690, SHORTLY AFTER ROTATION, FLIGHT CREW RECEIVED A SMOKE IN THE LAV INDICATION AND FA CONFIRMED LAV SMOKE DETECTOR WENT OFF, AN EMERGENCY WAS DECLARED AND A/C RETURNED TO YUL. NO SMOKE WAS EVIDENT. THE AIRCRAFT HAD BEEN DE-ICED PRIOR TO FLIGHT AND WAS POSSIBLE CAUSE, THE LAV SMOKE DETECTOR WAS REPLACED. 4TH EVENT, JAN 19,2007, FLT. 8295, ON DEPARTURE THROUGH 200 FEET THE LAV SMOKE CAUTION MSG CAME ON, F/A CHECKED LAV FOR SMOKE, NO SMOKE OR SMELL WAS EVIDENT, A/C RETURNED TO YWG FOR MAINTENANCE TO INVESTIGATE. AT THE TIME OF THE INCIDENT THE APU WAS OFF AND THE AIR CONDITIONING SYSTEM WAS BEING SUPPLIED BY THE ENGINES. THE LAV SMOKE DETECTOR WAS SUSPECTED AS BEING FAULTY AND WAS REPLACED A 2ND TIME. 5TH EVENT, JAN 25/2007, FLT.7941, CLIMBING THROUGH 500 FEET CREW RECEIVED A LAV SMOKE CAUTION LIGHT. F/A INSPECTED LAVATORY AND THEIR WAS NO SIGN OF SMOKE OR ODOR. THE CAUTION LIGHT WENT OUT WITHIN TWO MIN'S. AS A PRECAUTION A/C RETURNED TO DEPARTURE. MAINTENANCE SAID THEIR WAS AN OIL SMELL IN THE CABIN, THEY CARRIED OUT A BOROSCOPE OF THE ENGINES AND FOUND NR 2 ENGINE, NR 3 BEARING SEAL AT FAULT. A/C WAS FERRIED WHERE THE NR 2 ENGINE WAS REPLACED. CURRENT ENGINE HOURS SINCE.. WAITING FOR TEAR DOWN REPORT FOR FURTHER INFORMATION. (TC NR 20070128001)

CA070214001	CNDAIR	GE	FLAP SYSTEM	JAMMED
2/14/2007	CL6002B19	CF343B1		TE FLAPS

(CAN) ON APPROACH, WHEN THE CREW SELECTED FLAP 8, THE FLAPS DID NOT MOVE AND THEY STAYED AT 0. CREW LANDED FLAPLESS WITHOUT INCIDENT. NO MORE DETAILS. INFORMATION WILL BE UPDATED AS SOON AS IS AVAILABLE. (TC NR 20070214001)

CA070213001	CNDAIR	GE	FCU	MALFUNCTIONED
2/12/2007	CL6002B19	CF343B1		TE FLAPS

(CAN) FLAP FAIL MESSAGE RECEIVED IN-FLIGHT. AIRCRAFT LANDED UNEVENTFUL WITH FLAPS ZERO (FLAPS WOULD NOT MOVE). (TC NR 20070213001)

CA070219009	CNDAIR	GE	FLAP SYSTEM	FAILED
2/16/2007	CL6002B19	CF343B1		

(CAN) DURING APPROACH WHEN FLAP SELECTED TO 8 DEG, CREW RECEIVED (FLAP FAIL) CAUTION MESSAGE ON EICAS, CONTROL POSITION DISPLAY SHOWED 2DEG ON LT FLAP AND 0 DEG ON RT FLAP. ZERO DEG FLAP LANDING CARRIED OUT. AFTER LANDING CREW PERFORMED VISUAL INSPECTION OF THE FLAPS AND NOTED THAT LT FLAPS APPEARED TO BE AT 2 DEG AND RT FLAP LOOKED LIKE 2 DEG ON THE IB AND 0 DEG ON THE OB. FLAP CIRCUIT BREAKER RESET PROCEDURE CARRIED OUT. FLAPS FUNCTION CHECKED NORMAL. AIRCRAFT POSITIONED TO MAINTENANCE BASE. MAINTENANCE FOUND NO OBVIOUS FAULTS. ALL FLAP ACTUATORS REPLACED WITH REPLACEMENT UNITS, ALL FLAP DRIVE CABLES REMOVED AND INSPECTED AND RE-LUBRICATED. BOTH BPSU`S (FLAP BRAKE AND POSITION SENSOR UNITS) REPLACED. MAINTENANCE ACTIVITIES STILL IN PROGRESS. (TC NR 20070219009)

CA070225001	CNDAIR	GE	WINDSHIELD	BROKEN
2/12/2007	CL6002B19	CF343B1	1393215	COCKPIT

(CAN) INNER CORE OF CAPTAINS WINDSHIELD SHATTERED AT FL 330. MX REPLACED CAPTAINS WINSHIELD IAW 56-11-01. (TC NR 20070225001)

CA070219011	CNDAIR	GE	CONNECTOR	CORRODED

2/17/2007	CL6002B19	CF343B1	M2430823F	P1RU

(CAN) CREW REPORTED PASSENGER ADDRESS CIRCUIT BREAKER 1Q5 POPPED , NON PA/CHIMES/CALL FUNCTION. MAINTENANCE INSPECTION FOUND STOWED CONNECTOR P1RU CORRODED AND SHORTING , CONNECTOR IS FOR AFT CABIN PA HANDSET (NOT INSTALLED ON THIS TAIL) , CONNECTOR HAD BEEN BAGGED AND STOWED ABOVE CEILING PANEL. MAINTENANCE REMOVED CONNECTOR AND HEAT SHRUNK AND STOWED WIRING IAW AMM 20-17-10 . (TC NR 20070219011)

CA070306006	CNDAIR		DAMPER	MALFUNCTIONED
3/4/2007	CL6002C10		498003	NLG

(CAN) ON LANDING CREW REPORTED AN AIRFRAME VIBRATION. CREW INDICATED THAT THE VIBRATION DEMINISHED AS THE AIRCRAFT SPEED REDUCED. AIRCRAFT TAXIIED TO GATE WITHOUT FURTHER INCIDENT. MAINTENANCE INSPECTION REVEALED LOOSE APEX NUT ON LT SHIMMY DAMPER. NEW SHIMMY DAMPER AND ASSOCIATED PARTS ARE BEING REPLACED. (TC NR 20070306006)

CA070202019	CNDAIR	GE	WINDOW	CRACKED
1/31/2007	CL6002C10	CF348C1	601R3303031	COCKPIT

(CAN) CREW NOTED ON DESCENT, CAPT SIDE WINDOW CRACKED HOWEVER CABIN PRESS REMAINED NORMAL AND A.C LANDED SAFELY. C/A---REMOVED AND REPLACED CAPT SIDE WINDOW IAW CRJ AMM 56-10-05 AND OPS CK GOOD MX REPORT CAPT SIDE WINDOW SHATTERED (TC NR 20070202019)

CA070329002	CNDAIR	GE	BRACKET	BROKEN
3/23/2007	CL6002C10	CF348C1	CN6272017203	HYD LINE

(CAN) AC EXPERIENCED A COMMANDED IFSD DUE TO OIL PRESSURE LOSS DURING CRUISE. DURING FLIGHT, PILOT NOTICED OIL PRESSURE DECREASING STEADILY DURING CRUISE. AT 36 PSI OIL PRESSURE, PILOT INITIATED A COMMANDED SHUTDOWN OF THE NR 2 ENGINE AND DIVERTED INTO BILLINGS FOR AN UNEVENTFUL SINGLE ENGINE LANDING. UPON INSPECTION OF ENGINE, MECHANICS NOTICED A STATIC OIL LEAK FROM THE BOTTOM OF GEARBOX. AFTER FURTHER INSPECTION, IT WAS NOTICED THAT THE BRACKET HOLDING THE HYD LINE TO GEARBOX AT 6:30 ON THE AFT AGB FLANGE HAD BROKEN OFF, AND CONTACTED THE BOTTOM OF THE GEARBOX JUST ABOVE THE BRACKET LOCATION, HAD WORN A HOLE IN THE AGB HOUSING, RESULTING IN THE OIL LOSS. ENGINE IS BEING REMOVED AND REPLACED, ANOTHER ENGINE IN THE SKW SLC SHOP WAS FOUND TO HAVE THE SAME BRACKET CRACKED, AND I AM ALSO RESEARCHING THE MAINTENANCE HISTORY ON THIS ENGINE TO DETERMINE IF MAINTENANCE WAS DONE IN THE ARE, OR IF IT HAS NOT BEEN DISTURBED FROM PRODUCTION. THIS IS A BA/SHORTS EBU BRACKET. UNQUOTE THE AFFECTED BRACKET SUPPORTS THE EDP PRESSURE LINE, SHORTS PN CN627-2017-203 OR CN 627-2017-901 ENGINE IPC 71-00-05- FIG 05 ITEMS 560 AND 560A. ACTUAL PN OF CRACKED BRACKET NOT YET KNOWN. THIS PN APPEARS TO BE OR WAS SUPPLIED, INSTALLED TO BASIC ENGINES. THIS IS A 2ND KNOWN SIMILAR IFSD EVENT. PREVIOUS MESA A/C 10104 MAY 18/06 (TC NR 20070329002)

CA070117007	CNDAIR	GE	WINDOW	CRACKED
1/15/2007	CL6002C10	CF348C1	601R3303311	COCKPIT

(CAN) PILOT SIDE WINDOW INNER LAYER CRACKED. SIDE WINDOW ACC AMM 56-12-01 REPLACED. OPERATIONAL TEST OF WINDOW TEMP CONTR. DO A LEAK TEST OF LT SIDE WINDOW AFTER REPLACEMENT ACC AMM 56-12-400-801 A01 PERFORMED SATISFIED (TC NR 20070117007)

CA070117008	CNDAIR	GE	BFGOODRICH	SEAL	LEAKING
1/15/2007	CL6002C10	CF348C1		7339FT160T	NLG STRUT

(CAN) FLIGHT 5663 DEPARTED WITH 65 PASSENGERS ON BOARD WITH NO ISSUES NOTED. ON APPROACH, AFTER GEAR DOWN SELECTION CREW NOTED A NWS INOP CAUTION MESSAGE. TO GIVE THEMSELVES TIME TO GO THROUGH THE NWS INOP MESSAGE, THEY CARRIED OUT A GO AROUND. AS THEY FLEW BY THE RUNWAY, THE TOWER INFORMED THEM THAT THE NOSEWHEELS APPEARED TO BE TURNED 90 DEGREES. AN AC FLYING NEARBY OFFERED TO FLY BY THE AIRCRAFT AND INSPECT THE NOSE GEAR. THE PILOT REPORTED THAT THE NOSE GEAR WHEELS WERE OFF CENTER BY 20 DEGREES. AT THE GATE MAINTENANCE INSPECTED THE NOSE GEAR AND FOUND THAT THE STRUT WAS FLAT. MAINTENANCE SERVICED THE STRUT AND NOTED THAT THE STRUT WAS LEAKING. STL MAINTENANCE IS DISPATCHING MAINTENANCE AND SEALS TO REPAIR THE STRUT. SEAL REPLACED, A/C RETURNED TO SERVICE (TC NR 20070117008)

CA070404010	CNDAIR	GE	WINDSHIELD	FAILED
3/28/2007	CL6002C10	CF348C1	NP13932113	COCKPIT

(CAN) ON CLIMB OUT THROUGH 11000` PILOTS WINDSHIELD SHATTERED. REMARKS FROM PILOT (TOOK OFF CLIMBING THROUGH 11000 OR 12000) THE LT FRONT PILOT WINDSHIELD SPIDERWEBBED AND SHATTERED. IT SPIDERWEBBED ALL AT ONCE VERY QUICKLY. WE DECLARED AN EMERGENCY, DESCENDED TO 8000 FT AND SLOWED THE AIRCRAFT DOWN TO 190 KNOTS. COMPLETED THE QRH FOR LT WINDSHIELD HEAT. TRANSFERRED THE CONTROLS TO THE FIRST OFFICER AND PREPARED FOR AN EMERGENCY LANDING. BRIEFED THE FLIGHT ATTENDANTS AND SENT A MESSAGE TO DISPATCH VIA ACARS. NEXT WE ADVISED OPS WE WERE RETURNING AND WERE ASSIGNED GATE. FIRST OFFICER AND BRIEFED AN OVERWEIGHT LANDING AND COMPLETED IN RANGE AND BEFORE LANDING CHECKLIST. CONDITIONS WERE GUSTY WINDS GUSTING UP TO 43 KNOTS WITH WIND SHEER ADVISORIES IN THE AREA. AN OVERWEIGHT 70000 LBS LANDING WAS UNEVENTFULLY MADE AND WE TAXIED TO THE GATE. CVR WAS POSITIONED ON THE RUNWAY FOR OUR LANDING DUE TO WINDSHIELD AND OVERWEIGHT CONDITIONS. THE AIRPORT OPERATIONS AND PERSONNEL MET US AT THE GATE, TOOK STATEMENTS AND PHOTOS OF THE AIRPLANE. WROTE UP LT FRONT WINDSHIELD AND OVERWEIGHT LANDING IN MAINTENANCE LOG. UPON INSPECTION BY MECHANIC THE OUTER AND MIDDLE PANES OF THE WINDSHIELD HAD SHATTERED. (TC NR 20070404010)

CA070123014	CNDAIR	GE	WINDSHIELD	CRACKED
1/21/2007	CL6002D24	CF348C1	NP13932114	COCKPIT

(CAN) RT WINDSHIELD CRACKED, FL240.IAS250 DIFF PRESS 7.4 RT WINDSHIELD REPLACED ACC AMM 56-11-01-400. CURE TIME OF SEALANT TIL 21-01-2007, 20:00 LOC TIME. PLS PERFORM ADJUSTMENT OF WIPER ARM TENSION ACC AMM 30-42-09-400-801-A01 AND OPS TEST OF WIPER AND PERFORM A LEAK TEST OF WINDSHIELD ACC AMM 56-11-01-400-801-A01 (E). CONDITION OF SEALANT CHECKED OK. ADJUSTMENT OF WIPER ARM IAW.AMM. CHECKED OK. OPS TEST OF WIPER OK. CABIN PRESSURE TEST UP TO DELTA P 6.0 PERFORMED FOUND SATISFIED. (TC NR 20070123014)

CA070123015	CNDAIR	GE	WINDSHIELD	CRACKED
1/18/2007	CL6002D24	CF348C1	NP13932113	COCKPIT

(CAN) LT WINDSHIELD CRACKED. LT WINDSHIELD REPLACED IAW AMM 56-11-01-000-801 (TC NR 20070123015)

CA070409001	CNDAIR	GE	ENGINE	MALFUNCTIONED
3/30/2007	CL6002D24	CF348E5		NR 1

(CAN) ON TAKEOFF ROLL, 1ST OFFICER NOTICE A MOMENTARY FLUCTUATION OF ABOUT 2% ON NR 1 N1 GAGE JUST AFTER THE 80 KNOTS CALL. N1 THEN STABILIZED UNTIL REACHING JUST OVER 100 KNOTS, FLUCTUATED AGAIN. DID NOT HEAR OR FEEL ANY CHANGES IN ENGINE. THERE WERE NO EICAS MSG AND ALL OTHER ENGINE READOUTS WERE STABLE AND NORMAL. THIS WAS POSSIBLY A ERRONEOUS N1 READOUT, ELECTED TO CONTINUE TAKEOFF. EVERYTHING NORMAL ON CLIMB UNTIL SHORTLY AFTER ACCELERATION ALTITUDE WHEN NR 1 N1 BEGAN TO FLUCTUATE MORE SIGNIFICANTLY. COULD NOW HEAR AND FEEL NR 1 ENGINE SURGING. WITHIN SECONDS, ENGINE WENT INTO AN OVERSPEED CONDITION ACCOMPANIED BY A FADEC FAULT 1 STATUS MSG. BROUGHT THRUST LEVER TO IDLE, NO EFFECT. DECLARED AN EMERGENCY & RETURNED TO FIELD. LEVELED AT 7000 FT. WITH BOTH THRUST LEVERS AT IDLE, ACFT NEARING VMO VERY QUICKLY. RAN EPC & ENGINE SHUTDOWN CHECKLIST VERY QUICKLY. LANDED WITHOUT INCIDENT, FIRE DEPARTMENT INSPECT ENGINE FOR ANY SIGNS OF FIRE OR DAMAGE TAXIED TO GATE UNDER ACFT POWER. NO VISIBLE DAMAGE TO ACFT. ENGINE WAS REPLACED. (TC# 20070409001)

CA070301004	CNDAIR		ROD	CORRODED
3/1/2007	CL6012A12		6009260273	SPOILER

(CAN) DURING THE PILOT PRE-FLIGHT CHECKS THE LT FLIGHT SPOILER INDICATED DEPLOYED WHEN STOW WAS SELECTED. THE FLIGHT SPOILER STOW/DEPLOY HANDLE WAS STIFF AT THE STOW EXTREMELY. VISUAL CONFIRMATION REVEALED THAT THE FLIGHT SPOILER WAS NOT FULLY STOWED BUT THE RT SPOILER WAS. INVESTIGATION REVEALED THAT THE ROD ENDS OF THE 15 DEGREE CONTROL ROD WERE CORRODED WITH RED RUST AND WERE NOT ABLE TO MOVE RESTRICTING THE FEEDBACK OF THE FLIGHT SPOILER CONTROL UNITS ON THE LT SIDE. OPERATIONS USING TYPE 4 ANTI-ICING FLUIDS HAVE SHOWN TO CAUSE RED RUST CORROSION ON UNPROTECTED STEEL. THERE CURRENTLY IS NO REQUIREMENT TO TREAT THE SURFACES WITH A CORROSION INHIBITOR. THE USE OF TYPE 4 ANTI-ICING FLUIDS CONTRIBUTING TO CORROSION SHOULD BE DOCUMENTED AS

THEY WILL INCREASE THE RATE OF CORROSION AND SHOULD BE ADDRESSED IN THE MAINTENANCE PROGRAMS AND CORROSION INSPECTIONS. (TC NR 20070301004)

CA070125001	CNDAIR	GE	ACTUATOR	INOPERATIVE
1/25/2007	CL6012A12	CF343A	6008500185	MLG

(CAN) RT MAIN LANDING GEAR UNLOCK INDICATION APPROX. 15 - 20 MIN. AFTER ARRIVAL, NO PUMP, NO GEAR COMMAND, LOCK PARTIALLY MOVED TO UNLOCK POSITION. RETRACTING ACTUATOR REPLACED AND AC RETURNED TO SERVICE.

CA070221001	CNDAIR	GE	BUSHING	FAILED
2/19/2007	CL6012A12	CF348E5A1	600902461	RUDDER

(CAN) DURING FLIGHT THE CO-PILOTS RUDDER PEDAL ADJUSTMENT MECHANISM FAILED ALLOWING THE RUDDER PEDALS TO FALL FORWARD TO THE LIMIT OF THEIR TRAVEL. INSPECTION REVEALED THAT THE THREADED BUSHING IN THE ADJUSTMENT MECHANISM HAD FAILED ALLOWING THE SYSTEM TO DICONNECT. NOTE: RUDDER CONTROL WAS STILL AVAILIBLE THOUGH RUDDER PEDAL POSITION ADJUSTMENT WAS NOT. (TC NR 20070221001)

CA070209023	CNDAIR		WINDSHIELD	CRACKED
2/7/2007	CL6013A		6003303026	COCKPIT

(CAN) RT WINDSHIELD OUTER LAYER CRACKED DURING FLIGHT, A SINGLE CRACK LOCATED IN THE CENTER OF THE WINDSHIELD AND IS VERTICAL FROM TOP TO BOTTOM. AIRCRAFT PRESSURIZATION WAS NOT AFFECTED AND AIRCRAFT RETURNED TO BASE. (TC NR 20070209023)

CA070403005	CNDAIR	GE	WATER HEATER	ODOR
3/31/2007	CL6013A	CF343A	060150C1	LAVATORY

(CAN) WHILE EN ROUTE, A BURNING ODOR WAS NOTICED BY THE CREW AND PASSENGERS. NO SMOKE WAS APPARENT IN THE CABIN OR COCKPIT. THEN SEARCHED THE LAVATORY AND BAGGAGE COMPARTMENT. A TRACE OF SMOKE WAS FOUND IN THE BAGGAGE COMPARTMENT. A QUICK VISUAL INSPECTION OF THE LUGGAGE WAS CARRIED OUT TO SEE IF THIS WAS THE SOURCE OF THE SMOKE. IT WAS NOT. UPON EXITING THE LUGGAGE COMPARTMENT THE SMOKE WAS SEEN SLOWLY ADVANCING TO THE PASSENGER CABIN. CLOSED THE DOOR TO THE BAGGAGE AREA AS WELL AS TO THE LAVATORY. BRIEFED THE PASSENGERS TO NOT OPEN THE DOORS AND MOVED THEM TO THE MOST FORWARD SEATING POSITIONS. DECLARED AN EMERGENCY AND REQUESTED TO LAND. A RAPID DESCENT WAS INITIATED AND THE QRH PROCEDURE FOR SMOKE REMOVAL WAS CARRIED OUT. THE CABIN WAS SMOOTHLY DEPRESSURIZED TO ASSIST IN CLEARING THE SMOKE. A VISUAL APPROACH AND LANDING WAS CONDUCTED. UPON PARKING ON THE RAMP, AIRPORT FIRE AND RESCUE EVACUATED THE AIRCRAFT TO SEARCH FOR THE SOURCE OF THE SMOKE. THE CAUSE WAS LATER DETERMINED TO BE FROM THE LAVATORY HOT WATER HEATER. IT HAD OVERHEATED CAUSING THE INSULATING BLANKET AROUND IT TO SMOLDER. THE WATER HEATER WAS REMOVED AND THE SYSTEM DEACTIVATED BY AN ENGINEER FROM OUR APPROVED MAINTENANCE ORGANIZATION. THE AIRCRAFT WAS FERRIED BACK WITH NO FURTHER INCIDENT. DAMAGE WAS LIMITED TO THE HOT WATER HEATER AND ITS INSULATING COVER (TC NR 20070403005)

CA070308003	CNDAIR	GE	GEARBOX	FAILED
3/7/2007	CL604	CF343B1	2100140007	THROTTLE

(CAN) DURING CLIMB, THE RT ENGINE WAS NOT ABLE TO ACHIEVE CLIMB POWER. THE AIRCRAFT DIVERTED TO ANOTHER AIRPORT AND LANDED UNEVENTFULLY. INVESTIGATION REVEALED THAT THE THROTTLE GEARBOX HAS AN AREA WHERE MOVEMENT OF THE THROTTLE HAS NO EFFECT ON THE MFC. THIS CONDITION WOULD NOT ALLOW THE MFC TO REACH THE MAX POWER STOP. MFG SB 604-76-004 HAD NOT BEEN COMPLIED WITH AT THIS TIME NOR WAS IT REQUIRED AT THIS TIME BUT WAS PLANNED TO BE COMPLETED. THERE ARE (2) AD`S FOR THROTTLE GEARBOX WEAR ON THE RJ FLEET. REF: AD 2005-06-04, AD 2004-05-12. AFTER REPAIR AND RETURN OF THE AIRCRAFT TO THE MAIN BASE AND EXAMINATION OF THE FAILED PART THEN MORE INFORMATION WILL BE PROVIDED. (TC NR 20070308003)

CA070405010	CURTIS	PWA	CURTIS	AXLE	FRACTURED
4/5/2007	C46DAIRLIFT	R280051		203601042	TAIL GEAR

(CAN) DURING TAXI TO RUNWAY POSITION, TAIL WHEEL AXEL FRACTURED RESULTING IN TAIL WHEEL

DEPARTING TAIL GEAR ASSEMBLY. TAXI WAS AT SLOW SPEED BUT TAIL FORK DAMAGED DURING AXEL FAILURE. TAIL WHEEL FORK AND AXEL ASSEMBLY, WERE REPLACED AND AIRCRAFT RETURNED TO SERVICE. (TC NR 20070405010)

CA070330003	CVAC	ALLSN	RELAY	FAILED
3/29/2007	340CVAC	501D13D	N547E	TE FLAP

(CAN) DURING INSPECTION, THE FLAPS WERE SELECTED DOWN. THEY STOPPED MOVING APPROXIMATELY HALF WAY DOWN. THE FLAP SOLENOID CIRCUIT BREAKER WAS OBSERVED TO BE OPEN. UPON INVESTIGATION THE FLAP RELAY LOCATED IN THE GENERAL RELAY PANEL WAS FOUND TO HAVE FAILED. THE RELAY WILL BE REPLACED WITH A SERVICEABLE UNIT. (TC NR 20070330003)

CA070308004	CVAC	ALLSN	CONTROL SWITCH	SHORTED
3/6/2007	340CVAC	501D22		

(CAN) WHILE CARRYING OUT FLIGHT TRAINING THE LT GENERATOR WAS TURNED OFF. WHEN SELECTED BACK ON, IT WAS NOTED THAT SMOKE WAS COMING FROM THE VOLTAGE REGULATOR. THE GANG BAR WAS SELECTED TO SHUTOFF DC POWER. DURING TROUBLESHOOTING THE MAINTENANCE CREW DISCOVERED AN AN960-10L WASHER HAD SHORTED OUT THE WIRE ATTACHMENT LUGS ON THE BACK OF THE GENERATOR CONTROL SWITCH. A REPLACEMENT VOLTAGE REGULATOR WAS INSTALLED AND THE WIRING SYSTEM WAS INSPECTED. NO FURTHER DAMAGE WAS NOTED. THE AIRCRAFT WAS RETURNED TO SERVICE. (TC NR 20070308004)

CA070418007	DHAV	PWA	FITTING	CORRODED
4/17/2007	DHC1	R985AN14B	VALTB12091	WING TO BODY

(CAN) A CURSORY INSPECTION REVEALED CORROSION ON THE LT PORK CHOP FITTING. BOTH LT AND RT FITTINGS WERE REPLACED WITH NEW UNITS. DEPTH OF CORROSION WAS APPROX 25 PERCENT OF PART OVERALL THICKNESS. THE MANUFACTURE WAS CONTACTED. THE PART IN QUESTION IS APPROX 11 YEARS OLD. (TC NR 20070418007)

CA070330002	DHAV	PWA	HAMSTD	BARREL	CRACKED
2/16/2007	DHC2MKI	R985AN14B		58462	PROPELLER

(CAN) PROPELLER HISTORY - AUG 28 06 TTSOH 712.8 PROPELLER REPAIRED. - JAN 19 07 TTSOH 839.6 PROPELLER FLY WEIGHT ROLLER STIFF, ROLLER LUBRICATED AND RETURNED TO SERVICE. - FEB 16 07 TTSOH 854.9 PROPELLER REMOVED FROM SERVICE AND RETURNED TO O/H SHOP FOR REPAIR, SLOW TO CHANGE PITCH. - MAR 13 07 TTSOH 854.9 PROPELLER REPAIRED BY O/H SHOP, NEW CYLINDER AND COUNTER WEIGHT ROLLER KITS INSTALLED. - MAR 15 07 TTSOH 854.9 PROPELLER INSPECTED BEFORE INSTALLATION ON AIRCRAFT AND THE REAR PORTION OF THE PROPELLER BARREL (HUB) WAS FOUND TO BE CRACKED FROM THE BOLT BOSS 90` TO THE REAR OF THE BARREL ALONG THE OUTSIDE RADIUS. CONTINUED OPERATION OF THE UNIT IN THIS CONDITION WOULD HAVE LED TO A CATASTROPHIC FAILURE. THIS INCIDENT HELPS TO REINFORCE THAT FACT THAT ALL COMPONENTS THAT ARE TO BE INSTALLED ON A AIRCRAFT BE INSPECTED FOR CONDITION AND CONFORMANCE BY THE INSTALLER. (TC NR 20070330002)

CA070402007	DHAV	PWA	EDOFLOATS	MECHANISM	WRONG PART
7/10/2006	DHC2MKI	R985AN14B		C2UF2291	FLOAT WIRE PULL

(CAN) FORWARD RT WIRE PULL BROKE, NEW WIRE PULL P/N C2UF2291 FOUND TO BE TOO SHORT. INVESTIGATION REVEALED WRONG TIE RODS AND WIRE PULLS INSTALLED IAW APPROVED DRAWINGS ACCEPTED REPLACEMENT PARTS INSTALLED IAW APPROVED DRAWINGS. (TC NR 20070402007)

CA070404002	DHAV	PWA	DHAV	RIB	CORRODED
4/2/2007	DHC2MKI	R985AN14B		C2TP39ND	HORIZONTAL STAB

(CAN) DURING MAIN SPAR REPLACEMENT AFTER COMPLETION OF SB 2/47, A SINGLE NOSE RIB WAS FOUND TO BE HEAVILY CORRODED. AIRCRAFT TT 22235.0. THE AIRCRAFT OPERATES ON FLOATS IN A CORROSIVE ENVIRONMENT. PREVIOUS CORROSION TREATMENT WAS NOT IN EVIDENCE (TC NR 20070404002)

CA070212004	DHAV	PWA	FITTING	CORRODED
2/8/2007	DHC2MKI	R985AN14B	C2FS5487A	FUSELAGE

(CAN) AT SCHEDULED INSPECTION THE PORK CHOP FITTINGS WERE FOUND CORRODED. THESE C2FS5487A LT AND RT WERE BOTH REPLACED. DEPTH OF CORROSION WAS APPROX 20 PERCENT OF OVERALL PART THICKNESS. THE MANUFACTURE WAS CONTACTED AND REPORTED SEVERAL SERVICE DIFFICULTY REPORTS HAVE BEEN FILED BY OEM. (TC NR 20070212004)

CA070209005	DHAV	PWA	BELLCRANK	CORRODED
2/9/2007	DHC2MKI	R985AN14B	C2TR445	RUDDER

(CAN) ON REMOVAL OF RUDDER FOR BEARING REPLACEMENT CORROSION WAS PRESENT ON THE OB ATTACH POINTS OF THE RUDDER BELLCRANK NR C2TR445 (PICTURE ATTACHED) CORROSION WAS NOT EVIDENT BEFORE THE REMOVAL OF THE RUDDER AS THE DAMAGED AREA WAS COVERED BY THE RUDDER CONNECTING RODS NR C2UT233. THE AIRCRAFT NOTED ABOVE HAS BEEN OPERATED EXTENSIVELY FROM SALT WATER. (TC NR 20070209005)

CA070411005	DHAV	PWA	STRUT	CORRODED
4/10/2007	DHC3	R1340*	C3FS249	WINDSCREEN

(CAN) DURING REPLACEMENT OF THE LT WINDSCREEN, CORROSION WAS FOUND ON THE STRUT PN C3FS2-49. AFTER REMOVAL OF SEALANT IT WAS NOTED THE STRUT WAS CORRODED COMPLETELY THROUGH ONE OF THE WALLS OF THE STRUT. RT STRUT INSPECTED AND NO FAULT FOUND (TC NR 20070411005)

CA070122001	DHAV		RETAINING NUT	MISMANUFACTURED
1/19/2007	DHC6		C6UM117227	AXLE

(CAN) NEW AXLE NUTS FOR THE SERIES AIRCRAFT NOT FULLY ASSEMBLED. THE HOLES FOR THE (2) PINS HAVE BEEN DRILLED BUT NO PINS HAVE BEEN INSTALLED, INCOMPLETE PARTS. MARKING ON NUT WO-04403/1, DEC 07 2006 C6UM1172-27. (TC NR 20070122001)

CA070223004	DHAV	PWA	SKIN	CORRODED
2/22/2007	DHC6100	PT6A27		FUSELAGE

(CAN) AIRCRAFT IS IN THE PROCESS OF GOING THROUGH ITS (5) YEAR CORROSION INSPECTION. DURING INSPECTION, SEVERAL AREAS OF CORROSION WERE NOTED IN AREAS WHERE CORROSION IS USUALLY NOT FOUND. THE HORIZONTAL STAB LOWER SKIN (CENTER) WAS CORRODED AROUND SOME ANCHOR NUTS (FOR THE FAIRINGS), THE SUPPORT BRACKET FOR THE LOWER RUDDER ATTACH POINT, AND AROUND ALL THE PASSENGER WINDOW FRAMES (WHERE SPOT WELDS ARE). THE SUPPORT BRACKET IS BEING REPLACED AND WE ARE WAITING FOR RD`S FROM VIKING FOR THE OTHER AREAS. (TC NR741 20070223004)

CA070302003	DHAV	PWA	SWITCH	TRIPPED
12/12/2006	DHC6300	PT6A27	3LO4534	VOICE RECORDER

(CAN) FOLLOWING REMOVAL OF THE CVR FOR TESTING IT WAS DETERMINED THAT THE INERTIA SWITCH HAD BEEN PREVIOUSLY TRIPPED CAUSING THE REQUIRED DATA NOT TO BE RECORDED. A RESET OF THE SWITCH HAD THE SAME RESULTS WITH PREMATURE ACTIVATION CAUSING THE RECORDING TO STOP. THE SWITCH WAS REPLACED WITH A NEW ASSEMBLY. (TC NR 20070302003)

CA070219008	DHAV	PWA	BRACKET	LOOSE
2/18/2007	DHC6300	PT6A27	C6TPM102228	HORIZONTAL STAB

(CAN) WHILE FLIGHT CREW WHERE CONDUCTING A GROUND RUN, MAINTENANCE ON THE GROUND NOTED THE RT ELEVATOR WAS MOVING UP AND DOWN EXCESSIVELY. UPON INVESTIGATION, MAINTENANCE FOUND BRACKET P/N C6TPM1022-28 WITH RIVETS WORKING AND SEVERAL WHERE ACTUALLY MISSING. THIS BRACKET IS THE PART OF THE ELEVATOR HINGE THAT IS RIVETED TO THE HORIZONTAL STABILIZER. ALL MISSING, LOOSE OR DAMAGED FASTNERS WHERE REPLACED AND THE AIRCRAFT RETURNED TO SERVICE. THE COMPANY HAS ISSUED A FLEET INSPECTION OF ALL OTHER TWIN OTTERS. (TC NR 20070219008)

CA070209006	DHAV	PWA	TURBINE BLADES	FRACTURED
12/20/2006	DHC6300	PT6A27		POWER SECTION

(CAN) DURING CLIMB THE ENGINE EMITTED A LOUD NOISE AND SHUTDOWN UNCOMMANDED. THE AIRCRAFT DIVERTED TO POINT OF DEPARTURE. SUBSEQUENT INSPECTION REVEALED FRACTURED POWER TURBINE

BLADES. MFG WILL MONITOR INVESTIGATION OF THE INCIDENT AND ADVISE OF ROOT CAUSE ONCE ESTABLISHED. (TC NR 20070209006)

CA070307002	DHAV	PWA	BUCKLE	DAMAGED
3/5/2007	DHC6300	PT6A27	110124007	SEAT BELT

(CAN) WHEN COMPLYING WITH COMPANY CAMPAIGN NOTICE 010-25-10-011 AN INSPECTION FOR INTERFERENCE BETWEEN THE YOKE AND SEATBELT BUCKLE WAS CARRIED OUT IAW NM-06-29.THE RESTRAINT RELEASE MECHANISM ON PILOT AND COPILOTS SEAT BELTS CAN BE OPERATED UNINTENTIONALLY BY EXTREME NOSE UP AND ROLL COMMANDS OF THE CONTROL COLUMN. (TC NR 20070307002)

CA070307003	DHAV	PWA	SKIN PANEL	DEBONDED
3/5/2007	DHC6300	PT6A27	C6W1017	LT WING

(CAN) DEBONDING OF UPPER WING SKIN, OB OF NACELLE. DEBONDING DETECTED DURING ULTRA SONIC INSPECTION IAW SB 6/543. REPAIR CARRIED OUT IAW REO6-57-30-V013 REV A. (TC NR 20070307003)

CA070307004	DHAV	PWA	SKIN PANEL	DEBONDED
3/5/2007	DHC6300	PT6A27	C6W1017	RWS 72-97

(CAN) DEBONDING OF UPPER WING SKIN, IB OF NACELLE. DEBONDING DETECTED DURING ULTRA SONIC INSPECTION IAW SB 6/543. REPAIR CARRIED OUT IAW REO6-57-30-V012 REV A. (TC NR 20070307004)

CA070307006	DHAV	PWA	SKIN	CORRODED
3/5/2007	DHC6300	PT6A27		WING

(CAN) SEVERAL CORRODED RIVET HEADS FOUND ON THE LOWER SURFACE OF WING. THE AREA OF CONCENTRATION IS THE GAS PATHS FROM THE EXHAUST STACKS. REPAIRS CARRIED OUT IAW REO6-57-30-V017 (YW 85-91.25) AND REO6-57-30-V018 (YW 127-146). (TC NR 20070307006)

CA070307007	DHAV	PWA	SKIN	CORRODED
3/5/2007	DHC6300	PT6A27	MS20470AD	WING

(CAN) SEVERAL CORRODED RIVET HEADS FOUND ON THE LOWER SURFACE OF WING. THE AREA OF CONCENTRATION IS THE GAS PATHS FROM THE EXHAUST STACKS. REPAIRS CARRIED OUT IAW REO6-57-30-V019 (YW 85-91.25) AND REO6-57-30-V020 (YW 122-135). (TC NR 20070307007)

CA070307008	DHAV	PWA	SKIN PANEL	CORRODED
3/5/2007	DHC6300	PT6A27	C6W101427	LT WING

(CAN) SEVERAL CORRODED RIVET HEADS FOUND ON THE LOWER SURFACE OF WING. THE AREA OF CONCENTRATION IS THE GAS PATHS FROM THE EXHAUST STACKS. REPAIRS TO CORRODED RIVETS WAS INITIATED AND REVEALED CORROSION UNDER THE RIVET HEADS EXISTED TO A DEPTH OF 0.011. REPAIRS CARRIED OUT I.A.W. VIKING REO6-57-30-V025 (YW 85-97.25). I.C.A.`S PENDING D.T.A. BY VIKING. (TC NR 20070307008)

CA070129004	DHAV	PWA	BUCKLE	DAMAGED
1/15/2007	DHC6300	PT6A27	11011200	CREW SEATBELT

(CAN) SPECIAL INSPECTION OF CREW SEAT BELT ROTORY LATCH SYSTEM PERFORMED. BOTH LT AND RT CREW SEATBELT BUCKLE ASSEMBLIES WERE CAPABLE OF BEING UNLATCHED WHEN CONTACTED BY THE CONTROL YOKE WHEN ROTATED LT OR RT WITH THE YOKE FULL AFT AND THE SEAT IN THE MOST FORWARD POSITION. THIS SPECIAL INSPECTION WAS MANDATED BY A COMPANY CAMPAIGN NOTICE TO INSPECT AIRCRAFT IAW FAA SPECIAL AIRWORTHINESS INFORMATION BULLETIN (NM-06-39)TO DATE, NO RECTIFICATION FOR THIS PROBLEM HAS BEEN PUBLISHED. (TC NR20070129004)

CA070131001	DHAV	PWA	BENDIX	CONNECTOR	SEPARATED
1/29/2007	DHC6300	PT6A27			NR 1 TRANSMITTER

(CAN) AIRCREW REPORTED THAT THE NR 1 FUEL FLOW WAS FLUCTUATING WITH NO OTHER ENGINE PARAMETERS BEING AFFECTED. MAINTENANCE TROUBLESHOT THE SYSTEM, SWAPPED GAUGES FROM SIDE TO SIDE, PERFORMED ENGINE RUNS AND COULD NOT FAULT THE SYSTEM. AIRCRAFT WAS RELEASED FOR FLIGHT.

WHEN AIRCRAFT RETURNED TO BASE THE AIRCREW REPORTED THAT THE SNAG WAS STILL PRESENT. MAINTENANCE BEGAN INVESTIGATING DEEPER INTO SYSTEM. WHEN THE NR 1 FUEL FLOW TRANSMITTER WAS LOOKED AT, IT WAS FOUND THAT THE CONNECTOR PLUG BOSS HAD SEPARATED FROM THE MAIN BODY, THIS ALLOWED THE WIRES TO STRIKE THE HOUSING SIDES DURING FLIGHT DUE TO NORMAL VIBRATIONS, SHORTING OUT THE TRANSMITTER. THIS COMPONENT HAS BEEN INSTALLED ON THE AIRCRAFT SINCE WE TOOK POSSESSION OF IT IN 2001. THE CONNECTOR PLUG WAS FOUND TO BE ONLY HAND TIGHT ON THE TRANSMITTER NEGATING THE POSSIBILITY OF OVER TIGHTENING AT SOME POINT. A NEW TRANSMITTER WAS INSTALLED AND AIRCRAFT RELEASED SERVICEABLE. THE TRANSMITTER IS ON A (ON CONDITION) MAINTENANCE SCHEDULE. (TC NR20070131001)

CA070130001	DHAV	PWA		LINE	LEAKING
1/29/2007	DHC6300	PT6A27			FUEL VACUUM

(CAN) FLIGHT CREWS REPORTED THAT FUEL FLOW FLUCTUATES WHEN BOOST PUMPS ARE SELECTED OFF. SEVERAL VACUUM LEAKS WHERE FOUND IN THE FUEL LINES IN THE NACELLE AREA. SYSTEM SEALED AS REQUIRED, ENGINE GROUND RUNS CARRIED OUT AND NO FLUCTUATIONS NOTED AT TAKEOFF POWER WITH BOOST PUMPS OFF. (TC NR 20070130001)

CA070413004	DHAV	PWA		CONTROL BOX	FAILED
4/10/2007	DHC6300	PT6A27		C6NF1117	BETA SYSTEM

(CAN) THE AIRCRAFT WAS BEING USED FOR CREW TRAINING WHEN, ON TAKEOFF, THE RT PROPELLER RPM DROPPED TO 30 PERCENT. THE PILOTS ABORTED THE TAKEOFF AND RETURNED TO THE RAMP. THE PILOTS NOTED THAT NP WAS STILL AT 30 PERCENT WITH THE POWER LEVER AT IDLE. THE PROPELLER WAS FEATHERED WITH THE PROP LEVER AND IT DID SO. WHEN THE PROP LEVER WAS SELECTED FULLY FWD THE PROPELLER WOULD NOT UNFEATHER. TROUBLESHOOTING REVEALED THAT THERE WAS POWER TO THE BETA BACKUP SOLENOID VALVE. FURTHER TROUBLESHOOTING LED BACK TO THE BETA BACKUP CONTROL BOX P/N C6NF1117. THIS WAS REPLACED AND THE AIRCRAFT CHECKED SERVICEABLE. IT IS SUSPECTED THAT RELAY K4 MAY HAVE MALFUNCTIONED. THE CONTROL BOX IS BEING RETURNED TO THE OEM FOR EXAMINATION. (TC NR 20070413004)

CA070405005	DHAV	PWA	DHAV	FLAPPER VALVE	OBSTRUCTED
4/5/2007	DHC6300	PT6A27		C6VF11531	RAM AIR DUCT

(CAN) THE RAM AIR FLAPPER VALVE, P/N C6VF1153-1, BECAME JAMMED IN IT`S DUCT. ATTEMPTS BY THE PILOT TO RECTIFY THE PROBLEM BY MOVING THE CONTROL LEVER BACK AND FORTH RESULTED IN THE CONTROL CABLE, P/N 130-032A22.75B29.0, BECOMING KINKED AND UNSERVICEABLE. DIS-ASSEMBLY OF THE SYSTEM REVEALED THAT THE RUBBER-LIKE MATERIAL USED TO SEAL THE PERIMETER OF THE FLAPPER VALVE HAD BECOME DISTORTED AND ENLARGED, POSSIBLY DUE TO EXPOSURE TO HEAT. THIS CAUSED THE SEAL TO CONTACT THE INNER WALLS OF THE DUCT BEFORE THE FLAPPER WAS AT A 90-DEGREE ANGLE TO THE DUCT, IE: BEFORE THE FLAPPER WAS IN THE CLOSED POSITION. REMOVAL AND REPLACEMENT OF THE DAMAGED CABLE AND FLAPPER VALVE REQUIRED REMOVAL AND REPLACEMENT OF MUCH OF THE AIR CONDITIONING SYSTEM FOR ACCESS PURPOSES. TOTAL TIME SPENT FOR REMOVAL AND REPLACEMENT WAS 9 HOURS. (TC NR 20070405005)

CA070405006	DHAV	PWA		COLLAR	CRACKED
4/5/2007	DHC6300	PT6A27		7116111	STEERING SYS

(CAN) STEERING COLLAR CRACKED AT RADIUSED AREA OF ATTACH STUD TO STEERING ACTUATOR. FOUND AT ROUTINE MAINTENANCE INSPECTION (TC NR 20070405006)

CA070405008	DHAV	PWA		TORQUE LINK	CRACKED
4/5/2007	DHC6300	PT6A27		713381	NLG

(CAN) LOWER TORQUE LINK CRACKED AT ATTACHMENT LUG TO UPPER TORQUE LINK. CRACK FOUND ON ROUTINE MAINTENANCE INSPECTION (TC NR 20070405008)

CA060821004	DHAV	PWA		FCU	FAILED
8/8/2006	DHC7102	PT6A50		32447531917	NR 1 ENGINE

(CAN) AFTER INSTALLING THE FRESHLY OVERHAULED ENGINE IN THE NR 1 POSITION, THE ENGINE WAS STARTED TO PERFORM THE BETA RIGGING; THE PROPELLER WAS UNFEATHERED, THE POWER LEVEL MOVED UP TO THE

FWD BETA STOP TO RECORD NUMBERS, ALL THE PARAMETERS STABILIZED. THE NUMBERS WERE ABOUT TO BE RECORDED WHEN THE FCU. FAILED, ALL ENGINE PARAMETERS ACCELERATED. THE POWER LEVER WAS PULLED BACK AND THE ENGINE KEPT ACCELERATING. THE T-HANDLE WAS USED TO SHUTDOWN THE ENGINE. NO ENGINE LIMITS WERE EXCEEDED. THE FCU WAS REPLACED AND THE AIRCRAFT RETURNED TO SERVICE. THE FCU WAS FRESHLY OVERHAULED AND IT HAS BEEN RETURNED TO THE OVERHAUL FACILITY FOR REPAIR. (TC NR 20060821004)

CA070214005	DHAV	PWA	LINE	BROKEN
2/12/2007	DHC7102	PT6A50	3035279	PNEUMATIC SYS

(CAN) AFTER LANDING THE NR 1 PROP RPM WAS LOWER THAN NORMAL. MAINTENANCE FOUND THAT THE P3 LINE FROM THE P3 FILTER BOWL TO THE ENGINE WAS BROKEN PN 3035279. THE LINE WAS REPLACED AND THE AIRCRAFT RETURNED TO SERVICE. (TC NR 20070214005)

CA070122007	DHAV	PWA	LINE	RUPTURED
1/5/2007	DHC8101	PW121	82970009235	RT MLG

(CAN) DURING TAKEOFF, AFTER SELECTING LANDING GEAR UP, NR 2 ENGINE HYD PUMP FAILED AND AFTER SEVERAL MIN, A/C LOST ALL OF THE NR 2 HYD QUANTITY. SYSTEM NR 2 PRESSURE LOW AND QUANTITY DEPLETED, ALTERNATE LANDING GEAR EXTENSION. AFTER INVESTIGATION HYD TUBE, P/N 82970009-235 AT RT HYD SYSTEM (L/G BAY), WAS FOUND RUPTURED (IN THE FLARED AREA). TUBE WAS REPLACED; BLEEDING AND LEAK CHECK C/OUT OF RT HYD SYSTEM AND NO LEAKS OBSERVED. (TC NR 20070122007)

CA070305003	DHAV		RELAY	BROKEN
3/5/2007	DHC8102		CL12068161	ECU

(CAN) DURING THE ACCOMPLISHMENT OF THE INSPECTION TASK 7320/02, BOTH RELAY (RELAYS 7611-K3 AND K4) BASES WERE FOUND BROKEN AND BARELY MAKING CONTACT. SHOULD BOTH OF THEM HAVE FALLEN OFF AND DISCONNECTED IN FLIGHT, BOTH ECU`S WOULD HAVE HAD A COMPLETE POWER FAILURE. ECU SYSTEMS ARE DESIGNED TO HAVE POWER FED FROM NR 1 AND NR 2 ESSENTIAL BUSES. BOTH POWER SOURCES GO THROUGH THEIR RESPECTIVE RELAYS K3 AND K4, A BROKEN BASE WOULD COMPROMISE THE 2 POWER SOURCES SIMULTANEOUSLY, RESULTING IN EACH ECU REVERTING TO MANUAL MODE. THIS RELAY BASE PROBLEM WAS REPORTED BY ME FEW TIME FOR DIFFERENT SYSTEM ON DIFFERENT A/C AND DIFFERENT OPERATOR. (TC NR 20070305003)

CA070301003	DHAV	PWA	ACTUATOR	CRACKED
2/23/2007	DHC8102	PW120A	A44700009	SPOILER

(CAN) WHILE DOING A PRE-FLIGHT WALK AROUND THE PILOT NOTICED HYDRAULIC FLUID DRIPPING FROM THE RT FLAP TRACK NR 3 FAIRING. THE LEAK WAS FOUND TO BE COMING FROM THE OB ROLL SPOILER ACTUATOR. UPON REMOVAL OF THE ACTUATOR IT WAS FOUND THAT THE HOUSING HAD CRACKED IN THE AREA SUROUNDING ONE OF THE PLUGS CAUSING THE PLUG TO DISLODGE. THE CRACK EXTENDED AROUND THE ENTIRE CIRCUMFERENCE OF THE THREADED PORTION OF THE ACTUATOR BODY WHERE THE PLUG IS THREADED IN. THE ACTUATOR WAS REPLACED AND THE AIRCRAFT RETURNED TO SERVICE. (TC NR 20070301003)

CA070126008	DHAV	PWA	SMOKE DETECTOR	MALFUNCTIONED
1/17/2007	DHC8102	PW120A		LAVATORY

(CAN) ON GOING REPORTS OF LAVATORY SMOKE DETECTOR ACTIVATION. PROBLEM APPEARS TO HAVE BEGUN ON JANUARY 17, 2007 WITH A PILOT REPORT OF THE NR 2 ENGINE WILL NOT START AFTER (3) ATTEMPTS AND THEN AN OIL LEAK. MAINTENANCE REPLACED THE ENGINE IGNITERS AND CLEANED THE RESIDUAL OIL. ENGINE WAS THEN STARTED SUCCESSFULLY AND RUN TO TROUBLESHOOT THE OIL LEAK. NO OIL LEAK COULD BE FOUND AND IT WAS SUSPECTED TO BE AS A RESULT OF THE NO START CONDITION. ON JANUARY 18, 2007 LAVATORY SMOKE DETECTOR ACTIVATED ON FINAL APPROACH. FLIGHT ATTENDANT DETECTED ODOR ON GROUND. MAINTENANCE REPLACED DETECTOR (P/N 46-0083-4) AND SYSTEM CHECKED SERVICEABLE. ON NEXT FLIGHT, DETECTOR ACTIVATED AGAIN WITH NO SMOKE OR ODOR. LOW BATTERY (TC NR 20070126008)

CA070129005	DHAV	PWA	LOCK	DAMAGED
1/28/2007	DHC8102	PW120A	83221002003	NLG

(CAN) AFTER TAKEOFF THE NOSE LANDING GEAR FAILED TO RETRACT. FLIGHT CONTINUED AND LANDED TO THE DESTINATION AIRPORT WITHOUT FURTHER INCIDENT. MAINTENANCE INSPECTED THE AIRCRAFT AFTER ARRIVAL AND FOUND THE NOSE GEAR GROUND LOCK OUT, AND IN LOCK POSITION. (TC NR 20070129005)

CA070125003	DHAV	PWA	SMOKE DETECTOR	FALSE INDICATION
1/23/2007	DHC8102	PW120A	3023143	CARGO BAY

(CAN) ON DEPARTURE THROUGH 4000 FT, FLT CREW RECEIVED A MASTER WARNING BAGGAGE SMOKE INDICATION. FLIGHT CREW DECLARED AN EMERGENCY AND ELECTED TO RETURN TO DEPARTURE AIRPORT. THERE WAS A COMPANY LINE CHECK CAPTAIN ON BOARD WHO WITH THE FLIGHT ATTENDANT WENT TO CHECK THE CARGO HOLD. THERE WAS NO INDICATION OF SMOKE. FLIGHT LANDED SAFELY WITHOUT FURTHER INCIDENT. MAINTENANCE REPLACED THE NR 1 BAGGAGE SMOKE DETECTOR , THE LAMPS IN THE NR 2 DETECTOR (P/N 376), CLEANED THE CONNECTORS OF BOTH DETECTORS AND GROUND TESTED THEM SERVICEABLE. ENGINE RUNS WERE CARRIED OUT WITH NO DUPLICATION OF THE ORIGINAL DEFECT. TIME SINCE LAST REPAIR OF THE NR 1 DETECTOR WAS 1883:46 HOURS. (TC 20070125003)

CA070330004	DHAV	PWA	LANDING GEAR	MALFUNCTIONED
3/29/2007	DHC8102	PW120A		

(CAN) DURING CRUISE CREW RECEIVED INTERMITTENT LANDING GEAR INOP CAUTION LIGHT. CREW ELECTED TO RETURN TO ORIGINATING AIRPORT. ALTERNATE GEAR EXTENSION USED TO LOWER LANDING GEAR. NORMAL LANDING. MAINTENANCE INSPECTION FOUND NO FAULTS. AIRCRAFT WILL BE RETURNED TO SERVICE SUBJECT TO A SATISFACTORY TEST FLIGHT. (TC NR 20070330004)

CA070407001	DHAV	PWA	DOOR	DAMAGED
4/4/2007	DHC8102	PW120A		NLG

(CAN) MAINTENANCE CARRIED OUT A LIGHTENING STRIKE INSPECTION IAW AMM 05-50-31 AND DAMAGE WAS NOTED ON THE RT FWD NOSE GEAR DOOR, BURN AND PITTING MARKS ON BELLY FUSELAGE AND LT ELEVATOR STATIC WICK WAS BURNED OFF. NDT WAS CARRIED OUT AND THE BELLY SKIN WAS REPAIRED IAW MFG RD8-53-9556 ISSUE 1, TEMP REPAIR FOR 1000 HRS. THE ELEVATOR TIP FAIRING FASTENERS WERE REPLACED IAW SRM AND THE STATIC WICK WAS REPLACED AND BONDING CHECKS WERE CARRIED OUT. RT NOSE GEAR DOOR A SCREW WAS REPLACED. ALL SYSTEMS AND FLIGHT CONTROLS FUNCTION CHECKED SERVICEABLE AND THE A/C WAS RETURNED TO SERVICE. (TC NR 20070407001)

CA070126005	DHAV		FITTING	LOOSE
1/26/2007	DHC8106		85310340015	NLG WHEEL WELL

(CAN) DURING "C-CHECK", WE FOUND THE NLG ACTUATOR FUSELAGE FITTING WITH A FASTENER BROKEN AND ALL THE OTHER ONE LOOSE. WE EMBODIED THE SB 8-53-50. THIS SB WAS NOT ATTACH TO ANY AD. (TC# 20070126005)

CA070202007	DHAV	PWA	ADAPTER	CRACKED
2/1/2007	DHC8202	PW123D	311269001	P3 BLEED AIR

(CAN) DURING ENGINE OIL SERVICING, TECHNICIAN NOTICED HEAT BLANKET WAS DAMAGED ON HP DUCT, BLANKET WAS REMOVED AND CRACK WAS FOUND ON DUCT. (TC NR 20070202007)

CA070205004	DHAV	PWA	BELLCRANK	BROKEN
1/21/2007	DHC8301	PW123	83232013003	NLG DOOR

(CAN) AN OPERATOR MADE AIR TURN BACK DUE TO NOSE GEAR DOOR MALFUNCTION. THE NLG DOORS WON’T CLOSE WHEN SELECTED. THE AMBER NOSE GEAR DOOR LIGHT SHOWED ON LANDING GEAR CONTROL PANEL. MAINTENANCE FOUND THE NOSE GEAR BELLCRANK BROKEN AT ONE OF THE LUGS. (TC NR 20070205004)

CA070209018	DHAV	PWA	PACKING	LEAKING
12/30/2006	DHC8301	PW123		FUEL MANIFOLD

(CAN) THE ENGINE LOST POWER IN CRUISE AND WAS SHUT DOWN IN FLIGHT. SUBSEQUENT INSPECTION FOUND A LEAK AT THE FUEL MANIFOLD TRANSFER TUBES. ALL TRANSFER TUBE O-RING PACKINGS WERE REPLACED. ON JAN 4TH FUEL LEAKAGE FROM THE SAME TRANSFER TUBES WAS OBSERVED DURING GROUND OPERATIONS.

MFG IS INVESTIGATION PACKING INSTALLATION PROCEDURES AND PROCUREMENT SOURCE AND WILL ADVISE OF ROOT CAUSE ONCE ESTABLISHED. (TC NR 20070209018)

CA060816005	DHAV	PWA	BEARING	SEIZED
8/15/2006	DHC8301	PW123		CONDITION CABLE

(CAN) DURING ROUTINE MAINTENANCE INSPECTION OF MFG TASK 422 (A CHECK 500 HR REPETITIVE TASK) ZONAL INSPECTION OF RT ENGINE COMPARTMENT. FOUND POWER AND CONDITION CABLE PULLEYS (2 EACH SYSTEM, TOTAL 4 PULLEYS) IN THE UPPER AFT NACELLE/FRONT OF WING SPAR, TO ALL HAVE SEIZED BEARINGS (1 PULLEY WITH BRG ASSY FALLING OUT OF PHENOLIC PULLEY). PULLEYS REPLACED AND ENGINE CONTROLS RE-RIGGED. AIRCRAFT HAD ACCUMULATED 492 HOURS SINCE LAST ACCOMPLISHMENT OF TASK 422, AND 2465 HOURS SINCE LAST ACCOMPLISHMENT OF TASK 7610/05 (C-CHECK 5500 HR TASK) VISUAL INSPECTION OF ENGINE POWER AND CONDITION CONTROL CABLES AND PULLEYS. (TC NR 20060816005)

CA070306005	DHAV	PWA	DUCT	CRACKED
3/5/2007	DHC8301	PW123	82110588003	BLEED AIR

(CAN) DURING MAINTENANCE, TROUBLESHOOTING FOR LOW FLOW FROM CABIN GASPERS, MAINTENANCE, WHILE INSIDE THE AFT CARGO COMPARTMENT FELT THE REAR PRESSURE BULKHEAD AS BEING WARM/HOT. INVESTIGATION IN THE AFT EQUIPMENT BAY, FOUND THE ENGINE BLEED AIR / APU / AIR-CONDITIONING PACKS JUNCTION DUCT CRACKED, CRACK EXTENDED AT LEAST 50 PERCENT OF CIRCUMFERENCE AND WAS OPEN BY APPROX .2500 INCH. DUCT ASSEMBLY REPLACED, FUNCTION CHECKS CARRIED OUT. AIRCRAFT RETURNED TO SERVICE. (TC NR 20070306005)

CA070312008	DHAV	PWA	TORQUE LINK	BROKEN
2/22/2007	DHC8301	PW123	10134501	LT MLG

(CAN) DURING TAKEOFF A SEVERE VIBRATION WAS NOTICED ON THE ENTIRE AC, THE CREW ABORTED THE TAKEOFF SUCCESSFULLY. MAINTENANCE FOUND THE LT MLG TORQUE LINK BROKE INTO 2 PARTS ALONG WITH DAMAGE TO LT IB AND LT OB TIRES, BRAKE UNITS NR 1 AND 2, WIRING AND BRAKE LINES, AND STRUCTURE DAMAGE TO THE NACELLE. MFG TO CARRY OUT INVESTIGATION AS TO THE CAUSE OF TORQUE LINK FAILURE. (TC NR 20070312008)

CA070312001	DHAV	PWA	SHAFT	SHEARED
2/20/2007	DHC8301	PW123		HYD PUMP

(CAN) AFTER START OF THE NR 1 ENGINE, THE HYDRAULIC PUMP CAUTION LIGHT REMAINED ON WITH ZERO PRESSURE INDICATED ON THE ASSOCIATED HYDRAULIC SYSTEM PRESSURE GAUGE. AIRCRAFT ENGINES WERE SUBSEQUENTLY SHUTDOWN AND ENGINEERING CONTACTED TO CONDUCT DEFECT RECTIFICATION PRIOR TO RETURNING THE AIRCRAFT TO SERVICE. ENGINEERING DEFECT INVESTIGATION REVEALED THAT THE NR 1 ENGINE DRIVEN HYDRAULIC PUMP DRIVE SHAFT WAS SHEARED. THE HYDRAULIC PUMP WAS REPLACED WITH A SERVICEABLE ASSY IAW AMM 29-10-11 AND THE AIRCRAFT SUBSEQUENTLY RETURNED TO SERVICE. (TC NR 20070312001)

CA070202014	DHAV	PWA	WINDSHIELD	CRACKED
1/18/2007	DHC8301	PW123	NP15790114	COCKPIT

(CAN) DURING FLIGHT, SMOKE AND FLAMES STARTING COMING FROM THE TOP OF FO`S WINDSCREEN. SECONDS LATER WINDSCREEN SHOWED SEVERAL CRACKS. FOUND TERMINAL END L2 BURNED, REMOVED AND REPLACED TERMINAL END AND F/O`S WINDSHIELD. (TC NR 20070202014)

CA070416008	DHAV	PWA	COMPUTER	MALFUNCTIONED
3/24/2007	DHC8301	PW123	101741111	FMS

(CAN) CREW REPORTED FMS FAILED THEN FLIGHT DECK EXPERIENCED SMOKE AND FUMES. CREW ELECTED TO RETURN THE AIRCRAFT TO BASE WHERE A LANDING WAS CARRIED OUT WITHOUT INCIDENT. ENGINEERING REPLACED THE FMS UNIT. INITIAL INVESTIGATION OF THE REMOVED UNIT INDICATES AN ELECTRICAL FAILURE OF AN INTERNAL CIRCUIT BOARD. UNIT HAS BEEN RETURNED TO THE MFG FOR REPAIR AND WITH A REQUEST TO PROVIDE A STRIP REPORT. (TC NR 20070416008)

CA070416009	DHAV	PWA	GENERATOR	MALFUNCTIONED

3/27/2007	DHC8301	PW123	31708001A	NR 2 AC SYSTEM

(CAN) ON INITIAL CLIMB AFTER TAKEOFF THE AC GENERATOR `HOT` CAUTION LIGHT ILLUMINATED. CREW ELECTED TO RETURN THE AIRCRAFT TO BASE WHERE AN APPROACH AND LANDING WAS CARRIED OUT WITHOUT INCIDENT. ENGINEERING REPLACED THE AC GENERATOR AND RETURNED THE AIRCRAFT TO SERVICE. (TC NR 20070416009)

CA070411006	DHAV	PWA	CONTROL PANEL	BURNED
4/11/2007	DHC8301	PW123	52611	AUDIO CONTROL

(CAN) ENROUTE CREW NOTICED SMOKE COMING FROM AUDIO CNTRL PANEL, PULLED CIRCUIT BREAKER, SMOKE STOPPED. CREW DONNED O2 MASKS AND ELECTED TO RETURN TO ORIGINATING AIRPORT FOR NORMAL LANDING. MAINTENANCE REPLACED LT AUDIO CNTRL PANEL AND AIRCRAFT RETURNED TO SERVICE (TC NR 20070411006)

CA070305002	DHAV		BOLT	SHEARED
3/5/2007	DHC8311		MS2125004012	ACTUATOR FITTING

(CAN) DURING THE ACCOMPLISHMENT OF C-CHECK, THE NOSE ACTUATOR FUSELAGE FITTING WAS FOUND WITH (2) BOLTS SHEARED. SB 8-53-50 FOR THIS FAILURE. THE CUT IN S/N WAS 403 AND OUR A/C WAS S/N:410. THE MODIFICATION 8/2140 WAS TRULY ACCOMPLISHED. THE FITTING WAS INSTALLED WITH BIGGER BOLTS BUT (2) OF THOSE BOLTS WERE SHEARED. (TC NR 20070305002)

CA070410001	DHAV	PWA	CASE	CRACKED
4/8/2007	DHC8311	PW123		ACC GEARBOX

(CAN) ON MARCH 28TH/07 IT WAS REPORTED AN OIL LEAK ON NR 2 ENGINE. THE OIL LEVEL WHEN DOWN 2L IN 5.55 HOURS OF FLIGHT TIME. THE PROPELLER ASSY AND THE LT SIDE OF THE ENGINE WAS REPORTED TO HAVE BEING WASHED WITH OIL AND BOTH THEY WERE INSPECTED FOR LEAKAGE. NO SIGNS OF DETERIORATION FOUND AT THE TIME AND IT WAS DECIDED TO DO A POWER RUN CHECK. AGAIN NO SIGNS OF LEAKAGE FOUND. ON MARCH 29TH/07 WAS REPORTED ANOTHER OIL LEAKAGE FROM NR 2 ENGINE. PERSONNEL INVESTIGATED THE PROPELLER AND THE ENGINE AND IT WAS FOUND AN APPROXIMATE 2. (TC NR 20070410001)

CA070420003	DHAV	PWA	DOOR	STIFF
4/18/2007	DHC8311	PW123		EMERGENCY EXIT

(CAN) ON GROUND, WHEN FLIGHT ATTENDANTS UNDERGOING RECURRENT TRAINING ATTEMPTED TO OPEN FWD RT EMERG EXIT DOOR, WERE UNABLE TO GET DOOR OPEN. MAINTENANCE CALLED TO ASSIST AND REQUIRED TWO ENGINEERS (ONE ON INSIDE HANDLE AND ONE ON OUTSIDE HANDLE) TO GET DOOR OPEN . MAINTENANCE INSPECTED AND LUBRICATED INTERNAL DOOR MECHANISM, DOOR RE-INSTALLED AND FUNCTIONED WITH NORMAL OPENING FORCE. (TC NR 20070420003)

CA070123006	DHAV	PWA	VALVE	MALFUNCTIONED
1/22/2007	DHC8311	PW123	574205A	MLG

(CAN) DURING APPROACH WHEN LANDING GEAR SELECTED DOWN, NO GEAR MOVEMENT. CIRCUIT BREAKERS, HYDRAULIC PX AND QUANTITY AND DOORS ALL NORMAL. AFTER APPROXIMATELY 10 MINUETS, LANDING GEAR DEPLOYED NORMALLY TO EXTENDED POSITION. AIRCRAFT FERRIED GEAR DOWN TO MAINTENANCE BASE. LANDING GEAR SELECTOR VALVE REPLACED, GEAR SWINGS CARRIED OUT. SERVICEABLE. AIRCRAFT RETURNED TO SERVICE. (TC NR 20070123006)

2007FA0000386	DIAMON		FADEC	MALFUNCTIONED
5/1/2007	DA40			

THE ECU WARNING LIGHTS HAVE COME ON MULTIPLE TIMES NOW. ACCORDING TO THE MANUFACTURER, EACH TIME THESE ANNUNCIATORS COME ON THE AIRCRAFT MUST BE SERVICED BY AN APPROVED MECHANIC. BY THIELERTS EXPLANATION, IF THE AIRCRAFT GOES INTO A STEEP BANK OR UN-COORDINATED TURN THAN AN AIR BUBBLE CAN GET INTO THE FUEL LINE AND CAUSE UNEVEN PRESSURES BETWEEN THE TWO ENGINES. THE FADEC SENSES THIS AS A PROBLEM AND THE ECU WARNINGS TRIP. ACCORDING TO MANUFACTURE THIS HAS BEEN HAPPENING FREQUENTLY ON AIRCRAFT WITH THEIR FADEC ENGINES. THREE TIMES ALREADY ON OUR WITHIN 100 HOURS. IT IS A NUISANCE BECAUSE AN AIRCRAFT CAN EASILY BE STRANDED IN A LOCATION

WITHOUT A THIELERT APPROVED MECHANIC. OR WORSE, IF A GENUINE PROBLEM EXISTED WE WOULDN'T KNOW IT BECAUSE OUR ANUUNCIATOR WAS ALREADY ON.

CA070209016	DORNER	PWA	ENGINE	FAILED
1/23/2007	DO328100	PW119B		

(CAN) DURING CRUISE THE ENGINE CHIP DETECTOR AND LOW OIL PRESSURE WARNINGS ACTIVATED AND THE ENGINE FLAMED OUT IN FLIGHT. SUBSEQUENT INSPECTION REVEALED METAL DEBRIS IN THE ENGINE OIL. MFG WILL INVESTIGATE THE EVENT AND ADVISE OF ROOT CAUSE ONCE DETERMINED. (TC NR 20070209016)

CA070418005	DOUG	PWA	WIRE	ARCED
4/16/2007	DC3C	PT6A67R	M227591622	AIRSPEED WARNING

(CAN) THE AIRSPEED AURAL WARNING CIRCUIT BREAKER WAS FOUND TO BE (POPPED). WHEN THE UPPER PANEL WAS LOWERED EVIDENCE OF ARCING WAS FOUND ON AIRFRAME STRUCTURE. THE WIRE WAS REPAIRED THROUGH PARTIAL REPLACEMENT, CHAFE PROTECTOR WAS ADDED TO THE AIRFRAME STRUCTURE AND THE WIRE BUNDLE AND THE WIRE BUNDLE WAS RE-POSITIONED. (TC NR 20070418005)

CA070420001	DOUG	PWA	CYLINDER	CRACKED
4/19/2007	DC4	R20007M2	153084	NR 4 ENGINE

(CAN) REPLACED NR 14 CYLINDER ON NR 4 ENGINE, DUE TO CRACK. AIRCRAFT RETURNED TO SERVICE. (TC NR 20070420001)

0088867	EMB		BLADE	CRACKED
12/8/2005	EMB120		10075681	PROPELLER

PROPELLER BLADE NICKEL SHEATH CRACKED.

CA070209015	EMB	PWA	TUBE	FRACTURED
1/21/2007	EMB120	PW118		ENGINE OIL

(CAN) IN CRUISE ENGINE OIL PRESSURE REDUCED AND THE PILOT SHUT THE ENGINE DOWN IN FLIGHT. SUBSEQUENT INSPECTION REVEALED A FRACTURED NR 6 AND 7 BEARING OIL TRANSFER TUBE. (TC NR 20070209015)

CA070126001	EMB	ALLSN	ENGINE	MALFUNCTIONED
1/21/2007	EMB135LR	AE3007A		

(CAN) DURING CLIMB (280 KNOTS) AT FL350 , CREW HEARD A LOUD POP FOLLOWED BY MULTIPLE UNSPECIFIED EICAS MESSAGES AND ITT WAS IN THE AMBER RANGE. ENGINE SHUTDOWN UNCOMMANDED. F/A REPORTED WHITE SMOKE IN THE CABIN. CREW CONSIDERED ATTEMPTING A RE-START BUT OIL QUANTITY WAS ONLY 3 QUARTS. CREW DIVERTED AND A CMC DOWNLOAD REVEALED THAT AN OIL DEBRIS MESSAGE HAD BEEN SET ON JANUARY 19. ENGINE ENROUTE TO MFG FOR INVESTIGATION, FURTHER REPORT WILL BE SUBMITTED ON ENGINE TEARDOWN. (TC NR 20070126001)

CA070410002	EMB	GE	DRIVE SHAFT	DAMAGED
4/8/2007	ERJ170100	CF348E5A1	1700637	FLAP DRIVE

(CAN) DURING APPROACH, THERE WAS A FLAP FAIL MSG. ACFT LANDED WITH FLAPS LOCKED OUT. TROUBLESHOOTING REVEALED THAT GEARBOX SPLINED SHAFT AND DRIVE SHAFT WERE NOT LOCKED INTO PLACE BY LOCK SCREW. SIMILAR SCENARIO OCCURRED ON RHS, WHERE THE IB MOST FLAP ACTUATOR DISCONNECTED WITH THE SPLINE IN THE SAME WAY. THE LOCKBOLT WAS IN PLACE AND SAFETIED, BUT WAS NOT INSTALLED THROUGH THE HOLE IN THE SPLINED SHAFT. ANGLED GEARBOX PN IS AS ABOVE, BUT FLAP ACTUATOR PN IS C154814-2. (TC NR 20070410002)

CA070129001	EMB		LINE	LEAKING
1/27/2007	ERJ190100IGW			WATER

(CAN) REPORTED STIFF AILERONS IN FLIGHT AND IT APPEARS THE ROOT CAUSE WAS A WATER LEAK RESULTING IN WATER POOLING IN THE BILGE AND BINDING THE AILERON CABLES. AN INVESTIGATION IS STILL TAKING PLACE. (TC NR 20070129001)

CA070129002	EMB		TIRE	FAILED
1/25/2007	ERJ190100IGW			MLG

(CAN) ON LANDING, RT OB MAIN WHEEL TIRE FAILED, DUE TO BRAKE SEIZING. INVESTIGATION STILL UNDERWAY ON CAUSE. (TC NR 20070129002)

CA070212006	EMB		MECHANISM	FROZEN
2/11/2007	ERJ190100IGW			L2 DOOR

(CAN) F/A ADVISED L2 DOOR FROZEN UNABLE TO OPEN VENT FLAP. L2 DOOR THAWED OUT IN HANGAR, GVI CARRIED OUT ON DOOR, CHECKED SERVICEABLE. NOTE: SINCE NOV 1 2006, HAVE FOUND 8 OTHER SNAGS RELATED TO E190 FROZEN DOORS. COULD BE A CONCERN IN THE EVENT OF AN EMERGENCY SITUATION. (TC NR 20070212006)

CA070212008	EMB	GE	LINE	RUPTURED
1/27/2007	ERJ190100IGW	CF34*		WATER SYS

(CAN) WHILE ENROUTE TO DESTINATION CREW REPORTED TO MAINTENANCE THAT AILERON CONTROL COLUMN FREEZES AND TAKES EXCESSIVE FORCE TO FREE UP, UPON INSPECTION AT DESTINATION MAINTENANCE FOUND AILERON CONTROLS COVERED IN ICE CAUSED BY A BROKEN WATER LINE. A MAINTENANCE INVESTIGATION FOUND THAT A CLAMP HAD COME OFF FROM THE FORWARD WATER SYSTEM DRAIN PLUMBING. (TC NR 20070212008)

CA070307001	EMB	GE	BRAKE ASSY	ICED
3/2/2007	ERJ190100IGW	CF3410E6	90002340PR	MLG

(CAN) ON LANDING, AT 90 KNOTS THE LT OB TIRE BLEW, DAMAGING PART OF THE GEAR DOOR ASSEMBLY. ACFT DEPARTED WHERE A SEVERE SNOW STORM WAS TAKING PLACE, IT WAS NOTED THAT WATER WAS RUNNING FROM THE BRAKE ASSEMBLY AND DRIPPING FOR HOURS, SUSPECT BRAKE BECAME PACKED WITH SNOW AND ICE. (TC NR 20070307001)

CA070209012	FOKKER	PWA	DRIVE GEAR	DAMAGED
1/16/2007	F27MK50	PW127		GEARBOX

(CAN) THE ENGINE FLAMED OUT ON DESCENT. SUBSQUENT INSPECTION REVEALED DAMAGE TO THE ANGLE DRIVE GEARBOX GEARING. (TC NR 20070209012)

CA070307009	FRCHLD	GARRTT	REGULATOR	MALFUNCTIONED
3/5/2007	SA227CC	TPE33111U	66D44	HYD SYSTEM

(CAN) AC DEPARTED BASE AND UPON GEAR RETRACTION BOTH LT AND RT HYD PRESSURE LIGHTS ILLUMINATED FOR 3-4 SECONDS THEN WENT OUT. AIRCRAFT RETURNED TO BASE AND UPON INVESTIGATION IT WAS FOUND THAT NO RESIDUAL HYD PRESSURE WAS PRESENT AFTER ENGINE SHUTDOWN. UPON FURTHER INVESTIGATION IT WAS DISCOVERED THAT THE 31 PSI REGULATOR WAS CONTAMINATED WITH HYD FLUID. THE REGULATOR CHECK VALVE HAD BEEN INSTALLED INCORRECTLY. THE CHECK VALVE WAS REPOSITIONED AND THE REGULATOR WAS REPLACED. GEAR WINGS WERE CARRIED OUT SERVICEABLE AND AIRCRAFT RETURNED TO SERVICE. (TC NR 20070307009)

CA061018009	FRCHLD	GARRTT	LINE	CRACKED
10/5/2006	SA227CC	TPE33111U	2781032005	HYD SYSTEM

(CAN) HYD FLUID WAS DISCOVERED FROM GEAR UP LINE WHEN SYSTEM PRESSURE WAS APPLIED. LINE WOULD ONLY LEAK AFTER 1200 PSI WAS APPLIED, SYSTEM PRESSURE WAS 2000 PSI. PIN HOLE WAS IN RADIUS OF LINE. (TC NR 20061018009)

CA061018010	FRCHLD	GARRTT	PUMP	CRACKED
9/20/2006	SA227CC	TPE33111U	PV304426	HYD SYSTEM

(CAN) UPON ROUTINE SPLINE REPLACEMENT IT WAS NOTICED THAT A CASTING DEFECT HAD BEEN FOUND AT THE BASE OF THE PUMP BELOW A FITTING. THE NATURE OF THE CASTING DEFECT IS WHAT IS TERMED AS A COLD SHUNT. A FLOURSECENT PENETRANT INSPECTION WAS CARRIED OUT AND THE COLD SHUNT WAS NOT

FUSED CREATING A FATIQUE CRACK SINCE THE PUMP HAD BEEN IN SERVICE FOR SOME TIME. PUMP WAS REJECTED. (TC NR 20061018010)

CA070209022	GROB	LYC	FLAP SYSTEM	FROZEN
2/9/2007	G120A	AEIO540D4D5		

(CAN) THE COLD WEATHER HAS AFFECTED SEVERAL AIRCRAFT IN THE FLEET OF 9. IN -25 C OR COLDER TEMPERATURES, THE CIRCUIT BREAKERS POP AFTER LANDING WHEN THE FLAPS ARE SELECTED (TC NR 20070209022)

CA060911002	GRUMAN	PWA	FUEL FILTER	CONTAMINATED
7/24/2006	TS2ACALFORST	PT6A67A		ENGINE

(CAN) DURING A ROUTINE 100 HOUR INSPECTION, A LARGE AMOUNT OF PARTICLES WERE FOUND IN THE MAIN FUEL FILTERS AND THE FUEL PUMP INLET FILTERS. THE PARTICLES WERE SENT TO A LAB AND IT WAS DETERMINED THAT IT WAS ORGANIC MATERIAL SIMILAR TO THE EXPLOSION SUPPRESSANT FOAM USED IN THE PYLON FUEL TANKS. THE FOAM HAS BEEN REMOVED, SYSTEM FLUSHED AND NEW FOAM INSTALLED. THE REMAINDER OF THE FLEET (9 AIRCRAFT TOTAL) WILL HAVE THE FOAM REPLACED DURING WINTER MAINTENANCE. (TC NR 20060911002)

CA070201009	GULSTM	LYC	LYC	BRACKET	WORN
2/1/2007	500S	IO540E1B5	LW11147		ALTERNATOR

(CAN) THE ALTERNATOR ADJUSTING BRACKET BOLT HOLE THAT ATTACHES THE BRACKET TO THE ENGINE WAS FOUND CRACKED ALL THE WAY THROUGH. THE BRACKET WAS ONLY BEING HELD IN PLACE BY THE TENSION OF THE BELT. THERE IS SEVERAL OTHER REPORTS OF CRACKS IN THE BOLT HOLE OF THIS BRACKET ON OUR ENGINES. (TC NR 20070201009)

CA070402006	GULSTM	GARRTT	WINDSHIELD	CRACKED
3/15/2007	690D	TPE3315	36004314SS	COCKPIT

(CAN) DURING A ROUTINE MEDIVAC FLIGHT AT AN ALTITUDE OF 12,000 FEET, THE FLIGHT CREW VISUALLY NOTED THAT THE RT WINDSHIELD WAS CRACKED ACROSS THE UPPER OB CORNER. AIRCRAFT RETURNED TO BASE. INSPECTION OF THE WINDSHIELD FOUND THE OUTER WINDOW PANE CRACKED APPROXIMATELY 2.5 INCHES LENGTH ACROSS THE CORNER. NEW WINDSHIELD INSTALLED AND AIRCRAFT RETURNED TO SERVICE. (TC NR 20070402006)

2007FA0000298	GULSTM	GE	INVERTER	SHORTED
3/20/2007	G1159	CF343A	100201021346	

WHEN TURNING MAIN BATTERY SWITCHES ON, MECHANIC HEARD A LOUD POPPING SOUND, FOLLOWED BY THE AROMA OF SMOKE IN THE ENTRANCE AREA OF THE AIRCRAFT. THE FLOORBOARD WAS REMOVED AND FOUND THAT WATER FROM THE FORWARD LAVATORY AREA HAD BEEN RUNNING ONTO THE TOP OF THE EMERGENCY INVERTER CAUSING H2O AND AC VOLTAGE TO MEET (H2O WON). THE LAV AREA ON BOTH OF OUR AC WERE INSPECTED FOR LEAKS AND FOUND AREAS WHERE WATER HAD BEEN SITTING, EVEN THROUGH THERE WERE NO LEAKS. IT IS POSSIBLE THAT WHEN STOWING THE SINK (HINGED AND FOLDS UP INTO A CLOSEOUT) RESIDULE WATER IS DUMPING INTO THE CLOSEOUT. THE INVERTER WAS REPLACED AND WE SHUT THE WATER SUPPLY OFF FOR THE FORWARD LAY SINK ON BOTH. THERE IS NO PREFLIGHT OR SCHEDULED OPS CHECK. (K)

2007FA0000322	GULSTM	RROYCE	SKIN	CORRODED
3/30/2007	G1159A	SPEY511*	427	RT WING

DURING A WING NDT INSPECTION OF THE UPPER RT WING PLANK AT FS 452 AND BL 33, CORROSION WAS NOTED IN THIS AREA. ENGINEERING HAS DETERMINED THIS CORROSION IS EXCESSIVE ENOUGH TO REQUIRE ACCOMPLISHMENT OF ASC 229, WHICH REMOVES THE CORROSION ON THE PLANK AND INSTALLS A DOUBLER PLATE AND A NEW STYLE WING ATTACH PIN AS A CORRECTIVE ACTION. (K)

2007FA0000390	HUGHES	ALLSN	BRACKET	DAMAGED
4/12/2007	369D	250C20	369A7701	GOVERNOR

DURING A PREFLIGHT, THE PILOT NOTICED THE GOVENOR BELCRANK HAD SOME SLOP SUBSEQUENT

INSPECTION DISCLOSED THAT THE BELCRANK PIVOT BOLT WAS MOVING IN THE BRACKET BECAUSE THE HOLE WAS ELONGATED, REPLACED BRACKET. (K)

CA070309003	HUGHES	ALLSN	BLADE	CRACKED
3/2/2007	369D	250C20	500P2100101	MAIN ROTOR

(CAN) PILOT FELT A VIBRATION AND UPON LANDING CHECKED MAIN ROTOR BLADES. A CRACK APPROXIMATELY 18 INCHES FROM THE ROOT, RUNNING PERPENDICULAR TO THE TRAILING EDGE WAS DISCOVERED. IT APPEARS AS IF THE BLADE DEBONDED AT A RIB, AS THE CRACK FOLLOWS STRAIGHT FROM THE RIB TOWARD THE C-CHANNEL BEFORE IT TRAILS OFF TO THE SIDE. MDHI)OEM) HAS SUGGESTED THAT THE CAUSE WAS TOO MUCH TENSION ON THE BLADES AT TIE-DOWN, OIL-CANNING BETWEEN THE RIBS PUTTING PRESSURE ON THE BOND. (TC NR 20070309003)

2007FA0000400	HUGHES	ALLSN	BEARING	FAILED
4/25/2007	369D	250C20B		ENGINE

DURING FLIGHT THE UPPER CHIP PULL ILLUMINATED, IT WAS CLEANED IAW MM AND RETURNED TO SERVICE. A COUPLE OF HOURS LATER, A SECOND LIGHT ILLUMINATED. FOUND LOTS OF FINE CHIPS. REPLACED ENGINE. FOUND NR 1 BEARING BAD. (K)

2007FA0000321	HUGHES	ALLSN	EXCITER	INOPERATIVE
4/1/2007	369D	250C20B	6870885	ENGINE

PILOT WENT TO START THE AIRCRAFT AND THERE WAS NO IGNITION. FOUND IGNITION EXCITER INOPERATIVE, REPLACED. (K)

2007FA0000330	HUGHES	ALLSN	COMBUSTION CASE	CRACKED
4/3/2007	369D	250C20B	23031260	ENGINE

PILOT NOTICED CRACK IN COMBUSTION CAN ON PREFLIGHT CHECK REPLACED UNIT. (K)

2007FA0000285	HUGHES	ALLSN	GOVERNOR	FROZEN
3/19/2007	369D	250C20B	23065121	ENGINE

DURING AN INSPECTION IT WAS NOTED THAT THE BEAING RETAINING WASHER FOR THE ROD END WAS INCORRECT. AFTER THE BOLT WAS REMOVED IT WAS THEN DISCOVERED THAT THE THROTTLE ARM WAS SEIZED UP ON THE GOVERNOR, REPLACED GOVERNOR. (K)

CA070118006	HUGHES	ALLSN	BLADE	CRACKED
1/17/2007	369D	250C20B	369D21100516A	MAIN ROTOR

(CAN) THE UPPER BLADE SURFACE IS CRACKED CHORDWISE FROM LEADING EDGE TO TRAILING EDGE BETWEEN BLADE STATION 120 AND 124. THE LOWER BLADE SURFACE IS ALSO CRACKED IN THE MID CORD AREA BETWEEN STATION 120 AND 124 BUT DOES NOT EXTENT TO THE LEADING EDGE OR TRAILING EDGE. (TC NR 20070118006)

CA070201008	HUGHES	ALLSN	FCU	FAILED
1/27/2007	369HS	250C20	23034702	THROTTLE LEVER

(CAN) AFTER THE AIRCRAFT WAS STARTED, THE PILOT DECIDED TO DO A WALK AROUND THE AIRCRAFT. FUEL WAS NOTICED FLOWING FROM THE ENGINE BAY TO THE GROUND. FURTHER INVESTIGATION REVEALED A MASSIVE FUEL LEAK AT THE FUEL CONTROL THROTTLE LEVER SHAFT SEAL. FUEL WAS FLOWING FROM THE FUEL CONTROL AND SATURATING THE STARTER GENERATOR WITH FUEL. THE ENGINE WAS SHUTDOWN AND THE AIRCRAFT EVACUATED. FCU REPLACED WITH SERVICABLE UNIT, STARTER VISUALLY INSPECTED AIRCRAFT GROUND RUN, LEAK CHECKED AND TEST FLOWN. AIRCRAFT RELEASED. THIS COULD HAVE BEEN A DIFFERENT STORY. NORMALLY THE PILOT WOULD HAVE JUST TAKEN OFF AFTER STARTING THE AIRCRAFT. HIS DECISION TO PERFORM A WALK AROUND MAY HAVE SAVED LIVES AS THE AMOUNT OF FUEL LEAKING FROM THE FCU COULD HAVE CAUSED AN INFLIGHT FIRE. THE LEAK WAS QUITE SUBSTANTIAL. (LIKE POURING FUEL FROM A GLASS) (TC NR 20070201008)

2007FA0000345	LEAR	GARRTT	ADC	MALFUNCTIONED
1/17/2007	35A	TFE731*	702490031304	LT AVIONICS BAY

WHILE ENROUTE, THE PILOTS ALTIMETER (FROZE UP) AT ABOUT 8000 FT AND THE OVERSPEED HORN WENT OFF. THE PILOT RECYCLED THE ADC AND ITS OPERATION WAS RESTORED. THE ADC WAS TESTED AND NO DEFECTS WERE FOUND. THERE WAS NO EVIDENCE OF WATER OR MOISTURE IN OR AROUND THE ADC. THE ADC WAS REPLACED AND TESTED. THERE HAS BEEN NO PREVIOUS REPORTED FAILURES OF THIS SYSTEM IN THIS AIRCRAFT. (K)

CA070402005	LEAR	GARRTT	WHEEL	WRONG PART
1/2/2006	35A	TFE73122B	9543991	NR 3

(CAN) DURING ROUTINE PRE-FLIGHT INSPECTION, NR 3 MAIN WHEEL ASSY FOUND TO BE ASSEMBLED INCORRECTLY. WHEEL HALF`S WERE MISALIGNED BY ONE BOLT HOLE. AMM 32-A2-00 PG.210. FORGED NRS AND LOT NRS WERE NOT ALIGNED. MAIN WHEEL ASSEMBLY REMOVED FROM AIRCRAFT, REPAIRED AND RE-ASSEMBLED IAW AMM 32-42-00 AND CMM AP-480 32-40-35. (TC NR 20070402005)

2007FA0000294	LEAR	PWA	MIXING VALVE	INTERMITTENT
2/22/2007	60LEAR	PW305	1H1069	LT ENGINE

SHORTLY AFTER TAKEOFF, AIRCRAFT (LT BLEED AIR) WARNING ILLUMINATED, AND (RT BLEED AIR) WARNING ILLUMINATED APPROX 5 SEC LATER, SMELLED ODOR IN MAINTENANCE. UNABLE TO DUPLICATE MALFUNCTION ON GROUND RUN; LT MIXING VALVE WAS SUSPECTED, SO REPLACED. PERFORMED GROUND RUN FUNCTIONAL TEST OF BLEED AIR SYSTEM, AND FLIGHT TEST. NO FURTHER BLEED AIR WARNINGS. (K)

2007FA0000377	LEAR	WRIGHT	GARKENYON	ROD	FAILED
4/26/2007	60LEAR	R3350*			ACTUATOR

WHEN LANDING GEAR WAS CYCLED DOWN, THE RT RED IB GEAR DOOR OPEN LIGHT WOULD NOT EXTINGUISH. GEAR DOWN LOCK LIGHTS WERE GREEN. NORMAL LANDING. INSPECTION REVEALED THAT THE ACTUATOR SHAFT HAD UNSCREWED FROM THE PISTON NOT ALLOWING THE DOOR TO CLOSE. FURTHER EXAMINATION REVEALED THAT THE ROLL PIN SECURING THE SHAFT TO THE PISTON WAS SHEARED. THE LT ACTUATOR WAS INSPECTED AND THE ACTUATOR ROD WAS FOUND TO BE 2.5 TURNS FROM DISENGAGING FROM THE PISTON. 6-7 TURNS BOTTOMS THE ROD IN THE PISTON. REPLACED BOTH DOOR ACTUATORS.

2007FA0000378	LEAR	WRIGHT	ACTUATOR	FAILED
4/26/2007	60LEAR	R3350*	66000858	MLG

WHEN LANDING GEAR WAS CYCLED DOWN, THE RT RED IB GEAR DOOR OPEN LIGHT WOULD NOT EXTINGUISH. GEAR DOWN LOCK LIGHTS WERE GREEN. NORMAL LANDING. INSPECTION REVEALED THAT THE ACTUATOR SHAFT HAD UNSCREWED FROM THE PISTON NOT ALLOWING THE DOOR TO CLOSE. FURTHER EXAMINATION REVEALED THAT THE ROLL PIN SECURING THE SHAFT TO THE PISTON WAS SHEARED. THE LT ACTUATOR WAS INSPECTED AND THE ACTUATOR ROD WAS FOUND TO BE 2.5 TURNS FROM DISENGAGING FROM THE PISTON. 6-7 TURNS BOTTOMS THE ROD IN THE PISTON. REPLACED BOTH DOOR ACTUATORS.

2007FA0000232	LKHEED	GARRTT	BATTERY	FAILED
3/5/2007	1329*	TFE7313	RG380E44	MASTER

THESE 2 EA PN RG-380E/44 MAIN SHIP BATTERIES WERE INSTALLED ON 10/30/2006. THESE BATTERIES WERE REPLACEMENTS FOR 2 EA BATTERIES THAT HAD BEEN IN SATISFACTORY SERVICE IN THIS AC FOR APPROX 48 MONTHS BUT FAILED A CAPACITY CHECK DURING A REGULAR SCHEDULED INSPECTION. LESS THAN 2 MONTHS AFTER INSTALLATION THE PILOTS WERE UNABLE TO START THE MAIN ENGINES USING THESE BATTERIES. AT THIS TIME THE BATTERIES HAD A TOTAL FLIGHT TIME OF 16 HOURS AND HAD PERFORMED 26 MAIN ENGINE STARTS AND 8 APU STARTS. THE MAIN ENGINES WERE STARTED USING A GROUND POWER UNIT. ALL CHARGING AND ELECTRICAL OPERATIONS APPEARED NORMAL. THE BATTERIES WERE REMOVED AND GIVEN TO REPAIR STATION FOR TESTING. BOTH BATTERIES WERE TESTED IAW (INSTRUCTION FOR CONTINUED AIRWORTHINESS). BOTH BATTERIES FAILED UNDER TESTING. THE CHARGING AND ELECTRICAL SYSTEM ON THE AIRFRAME WERE TESTED IAW MFG MM, NO FAULTS WERE FOUND. BATTERIES FROM A DIFFERENT MFG WERE INSTALLED AND NO FURTHER ELECTRICAL PROBLEMS HAVE OCCURRED. MY CONCERN IS WHY DID THE PREVIOUS BATTERIES LAST 48 MONTHS YET THESE 2 IDENTICAL REPLACEMENTS LASTED LESS THAN 2 MONTHS. AT THE TIME OF WRITING THIS REPORT THESE BATTERIES HAVE BEEN RETURNED TO MFG FOR FURTHER TESTING AND ARE STILL IN THEIR POSSESSION. (K)

CA070216005	LKHEED	ALLSN	ALLSN	OIL SYSTEM	LOW PRESSURE

2/10/2007	382G	501D22A		NR 2 ENGINE

(CAN) IN CRUISE FLIGHT, THE CREW OBSERVED THAT THE OIL QUANTITY WAS DROPPING ON NR 2 ENGINE. AFTER VISUAL CONFIRMATION THAT OIL WAS EXITING THE OVERBOARD DRAIN, THE ENGINE WAS SHUTDOWN. THE AIRCRAFT LANDED WITHOUT FURTHER PROBLEM. MAINTENANCE REPLACED THE ENGINE SCAVENGE SYSTEM FILTER, THE ENGINE OIL COOLER, CHECKED THE ENGINE MAGNETIC DRAIN PLUGS AND REFILLED THE ENGINE WITH FRESH OIL. NO CONTAMINATION WAS OBSERVED OTHER THAN SOME CARBON IN THE SCAVENGE FILTER. THE AIRCRAFT WAS GROUND RUN AND THE RETURNED TO SERVICE. (TC NR 20070216005)

2007FA0000349	MAULE	CONT	SPAR	LOOSE
4/1/2007	M4210C	IO360*	3087B	RT FLAP

DURING AN ANNUAL INSPECTION, THE RT FLAP IB HINGE/CONTROL BRACKET WAS FOUND TO BE LOOSE. FURTHER INSPECTION REVEALED THAT THE FLAP SPAR WAS CRACKED AT THE UPPER RIVET ATTACH POINTS. THE CRACK IS 3.5 INCH LONG AND EXTENDS PAST THE RIVET HOLES IN BOTH DIRECTIONS. ADDITIONALLY, BOTH CLOSURE RIBS, AT THEIR ATTACH ANGLES TO THE SPAR. THE SPAR PN IS 3078B, RIB PNS 3046-2 AND 3046-1, RIVET PNS SS/SS 34D AND SS/SS 32D (MFG SUPPLIED). THE FLAP SPAR AND RIBS WERE REPLACED AND THE AIRCRAFT RETURNED TO SERVICE. (K)

CA070228002	MTSBSI	GARRTT	WOODWARD	ARM	STIFF
2/21/2007	MU2B60	TPE33110		89741016	GOVENOR

(CAN) WHEN AIRCRAFT LANDED IT WOULD PULL TO THE LT. MAINTENANCE FOUND THAT THE PROP GOVERNOR ARM WAS STIFF AND WOULD NOT RETURN TO THE STOP. NOTE THIS GOVERNOR HAS SB TPE331-72-0567 RETURN SPRING INCORPORATED ON IT. GOVERNOR WAS REPLACED AND CHECKED SERVICEABLE. (TC NR 20070228002)

CA070227013	PILATS	PWA	LIGHT	STUCK
2/23/2007	PC1245	PT6A67B	973321920	CAUTION LIGHT

(CAN) WHEN RESETING THE CAUTION LIGHT, IT WOULD OCCASIONALY STICK ON. THE CAUTION LIGHT ASSY WAS REPLACED WITH NEW. (TC NR 20070227013)

CA070227003	PILATS	PWA	GEARBOX	MAKING METAL
2/15/2007	PC1245	PT6A67B		REDUCTION

(CAN) SHORTLY AFTER TAKEOFF THE ENGINE CHIP LIGHT ILLUMINATED. THE PILOT RETURNED TO BASE. THE REDUCTION GEARBOX CHIP DETECTOR WAS INSPECTED AND A FERROUS METAL FLAKE WAS FOUND ON THE DETECTOR, NO CONTAMINATION WAS FOUND IN ANY SCREENS OR THE MAIN OIL FILTER. THE ENGINE WAS RETURNED TO SERVICE AFTER COMPLETING THE MAINTENANCE REQUIREMENTS SPECIFIED IN MM CH. 79-20-02. AFTER 10 HRS OF OPERATION THE OIL FILTER WAS PULLED AND NO CONTAMINATION WAS FOUND. THE ENGINE HAS ACCUMULATED 101 HRS SINCE THE INCIDENT WITH NO FURTHER PROBLEMS. THE POWER SECTION NOW HAS 8788.3 TSN AND 652.9 TSO. (TC NR 20070227003)

CA070227008	PILATS	PWA	HARTZL	BLADE	LEAKING
2/23/2007	PC1245	PT6A67B	HCE4A3D		PROPELLER

(CAN) EXCESSIVE GREASE WAS NOTED LEAKING FROM PROPELLER BLADE ROOT ON ALL (4) BLADES. PROPELLER REMOVED AND SENT FOR REPAIR. (TC NR 20070227008)

CA070310001	PILATS	PWA	ACTUATOR	FROZEN
3/2/2007	PC1245	PT6A67B	9787320309	TE FLAPS

(CAN) FLAPS WOULD WORK AS NORMAL, EVEN AFTER 4 HOUR FLIGHT AT -45. AFTER LANDING & SELECTING FLAPS UP, (FLAPS) CAUTION WOULD COME ON NR FLAPS WOULD NOT MOVE. NORMAL GROUND RESET WOULD NOT WORK. FLAP CONTROL 1 AMP C/B APPEARED TO BE (BLOWN) BUT NOT POPPED. AFTER RESETTING C/B, NORMAL FLAP RESET WOULD WORK. TRYING TO MOVE FLAPS AGAIN WOULD CAUSE THE SAME PROBLEM. NOTE THIS DEFECT WOULD ONLY OCCUR IF THE GROUND TEMP WAS -5 TO -12. AFTER WARMING THE AIRCRAFT IN A HANGAR FLAPS WOULD RESET NR WORK. UPON INSPECTION OF THE ACTUATORS IT WAS DISCOVERED THAT 3 OF THE 4 ACTUATORS WERE HEATING UP. +40 TO +50 C. ACTUATORS WERE REMOVED FROM SERVICE. ALSO NOTED WAS FLAP CONTROL WARNING UNIT FAILURE CODES INCLUDED TOO HIGH CURRENT DRAW REF. PC12

AMM. THE CURRENT DRAW WAS CONFIRMED TO BE TOO HIGH. AFTER REPLACEMENT OF ACTUATORS, CURRENT DRAW WAS WITHIN LIMITS. (TC NR 20070310001)

CA070310002	PILATS	PWA	ACTUATOR	FROZEN
3/2/2007	PC1245	PT6A67B	97897320309	TE FLAPS

(CAN) FLAPS WOULD WORK AS NORMAL, EVEN AFTER 4 HOUR FLIGHT AT -45. AFTER LANDING AND SHUTDOWN (FLAPS) CAUTION WOULD COME ON AND FLAPS WOULD NOT MOVE. NORMAL GROUND RESET WOULD NOT WORK. FLAP CONTROL 1 AMP C/B APPEARED TO BE (BLOWN) BUT NOT POPPED. AFTER RESETTING C/B, NORMAL FLAP RESET WOULD WORK. TRYING TO MOVE FLAPS AGAIN WOULD CAUSE THE SAME PROBLEM. NOTE THIS DEFECT WOULD ONLY OCCUR IF THE GROUND TEMP WAS -5 TO -12. AFTER WARMING THE AIRCRAFT IN A HANGAR FLAPS WOULD RESET AND WORK. UPON INSPECTION OF THE ACTUATORS IT WAS DISCOVERED THAT 3 OF THE 4 ACTUATORS WERE HEATING UP. +40 - +50 C. ACTUATORS WERE REMOVED FROM SERVICE. ALSO NOTED WAS FLAP CONTROL WARNING UNIT FAILURE CODES INCLUDED TOO HIGH CURRENT DRAW REF. PC12 AMM. THE CURRENT DRAW WAS CONFIRMED TO BE TOO HIGH. AFTER REPLACEMENT OF ACTUATORS, CURRENT DRAW WAS WITHIN LIMITS. (TC NR 20070310002)

CA070310003	PILATS	PWA	ACTUATOR	FROZEN
3/2/2007	PC1245	PT6A67B	9787320309	TE FLAPS

(CAN) FLAPS WOULD WORK AS NORMAL, EVEN AFTER 4 HOUR FLIGHT AT -45. AFTER LANDING AND SHUTDOWN (FLAPS) CAUTION WOULD COME ON AND FLAPS WOULD NOT MOVE. NORMAL GROUND RESET WOULD NOT WORK. FLAP CONTROL 1 AMP C/B APPEARED TO BE (BLOWN) BUT NOT POPPED. AFTER RESETTING C/B, NORMAL FLAP RESET WOULD WORK. TRYING TO MOVE FLAPS AGAIN WOULD CAUSE THE SAME PROBLEM. NOTE THIS DEFECT WOULD ONLY OCCUR IF THE GROUND TEMP WAS -5 TO -12. AFTER WARMING THE AIRCRAFT IN A HANGAR, FLAPS WOULD RESET AND WORK. UPON INSPECTION OF THE ACTUATORS IT WAS DISCOVERED THAT 3 OF THE 4 ACTUATORS WERE HEATING UP. +40 - +50 C. ACTUATORS WERE REMOVED FROM SERVICE. ALSO NOTED WAS FLAP CONTROL WARNING UNIT FAILURE CODES INCLUDED TOO HIGH CURRENT DRAW REF. PC12 AMM. THE CURRENT DRAW WAS CONFIRMED TO BE TOO HIGH. AFTER REPLACEMENT OF ACTUATORS, CURRENT DRAW WAS WITHIN LIMITS. (TC NR 20070310003)

CA070307005	PILATS	PWA	DISPLAY	INOPERATIVE
3/6/2007	PC1245	PT6A67B	0660312525	EFIS

(CAN) DURING CRUISE, A (DU) WARNING APPEARED ON THE CO-PILOTS EADI DISPLAY INDICATING INSUFFICENT COOLING. THE DISPLAY UNIT WAS REPLACED. (TC NR 20070307005)

CA070209004	PILATS	PWA	PROPELLER	LEAKING
2/3/2007	PC1245	PT6A67B	HCE4A3D	

(CAN) DURING FLIGHT OIL WAS NOTICED ON THE WINDSCREEN WHILE ON ROUTE. UPON INSPECTION AFTER LANDING, MAINTENANCE FOUND EXCESSIVE OIL ON ENGINE COWLING. PROP WAS REMOVED AND SENT FOR REPAIRS. REPAIR SHOP CHANGED ALL THE INTERNAL SEALS AND RETURNED THE PROP. REPAIRED PROP WAS RE-INSTALLED. AFTER 6 HRS IN OPERATION FLUID WAS NOTICED LEAKING FROM PROP AGAIN ALTHOUGH NOT TO THE DEGREE THAT OCCURRED ON THE FIRST OCCASION. AFTER CLEANING AND GROUND RUNS IT WAS DETERMINED THAT THE PROP WAS LEAKING OIL AGAIN. PROP WAS REMOVED AND SENT FOR REPAIR AGAIN. REPAIR SHOP FINDINGS HAVE YET TO BE DETERMINED. (TC NR 20070209004)

CA070212001	PILATS	PWA	ACTUATOR	INTERMITTENT
2/1/2007	PC1245	PT6A67B	978731813	AILERON TRIM TAB

(CAN) AILERON TRIM INTERMITTENT. TRIM TAB ACTUATOR REPLACED AND AIRCRAFT RETURNED TO SERVICE (TC NR 20070212001)

CA070212002	PILATS	PWA	CONDITION LEVER	STIFF
2/8/2007	PC1245	PT6A67B	941941141	COCKPIT

(CAN) DURING INSPECTION, IT WAS FOUND THAT THE CONDITION LEVER WAS EXTREMELY HARD TO MOVE. THE CONDITION LEVER CABLE WAS REPLACED. (TC NR 20070212002)

CA070402003	PILATS	PWA	PRESSURE SWITCH	LEAKING

3/22/2007	PC1245	PT6A67B	973811430	HYD SYSTEM

(CAN) DURING INSPECTION IT WAS NOTED THAT THIS HYDRAULIC PRESSURE SWITCH WAS LEAKING FLUID AT THE SWAGED SEEM OF THE SWITCH. THE SWITCH WAS REPLACED WITH NEW. (TC NR 20070402003)

CA070402004	PILATS	PWA	CHIP DETECTOR	BROKEN
3/30/2007	PC1245	PT6A67B	304544902	ENGINE

(CAN) WHEN THE CONNECTOR WAS REMOVED FROM THE CHIP DETECTOR AT INSPECTION, IT WAS NOTED THAT ONE OF THE PINS OF THE CHIP DETECTOR HAD BROKE, AND STAYED IN THE CONNECTOR. THE CHIP DETECTOR WAS REPLACED. (TC NR 20070402004)

CA070112001	PILATS	PWA	BEARING	WORN
12/9/2006	PC1245	PT6A67B	9408328506	RUDDER

(CAN) DURING INSPECTION OF TAIL TOP ATTACH BOLT FOUND TO HAVE EXCESSIVE WEAR. RUDDER REMOVED FOR REPAIR. DURING REPAIR ANCHOR NUT WAS DAMAGED. NEW OVERSIZED BUSHING INSTALLED, WITH NEW BOLT, BEARING AND ANCHOR NUT. MFG WAS NOTIFIED OF THIS DEFECT. (TC NR 20070112001)

CA070112002	PILATS	PWA	BEARING	WORN
1/6/2007	PC1245	PT6A67B	9408328506	RUDDER

(CAN) DURING INSPECTION OF TAIL TOP ATTACH BOLT FOUND TO HAVE EXCESSIVE WEAR. RUDDER REMOVED AND NEW BOLT P/N 932.35.71.166 AND BEARING REPLACED. MFG AIRCRAFT NOTIFIED OF DEFECT. (TC NR 20070112002)

CA070409005	PIPER	LYC	SELECTOR	FAILED
4/6/2007	PA23250	IO540C4B5		FUEL

(CAN) DURING FUNCTIONAL TEST PRIOR TO TAKEOFF, WHEN MOVING FUEL SELECTOR FROM OB TO IB TANKS THE ROLL PIN CONNECTING THE FUEL SELECTOR HANDLE TO THE LINKAGE FAILED. THIS FAILURE LEFT THE RT ENGINE FUEL SELECTOR IN THE OFF POSITION, STARVING THE ENGINE FOR FUEL. THE AIRCRAFT RETURNED TO THE RAMP FOR REPAIRS. (TC NR 20070409005)

CA070208003	PIPER	LYC	THROTTLE CABLE	FAILED
1/17/2007	PA23250	IO540C4B5	30205002	

(CAN) DURING DESCENT THE RT THROTTLE DID NOT RESPOND. THE ENGINE WAS SHUTDOWN AND PROPELLER FEATHERED. UPON RETURN TO THE HANGAR, CABLE 30205-002 WAS REPLACED AND DUAL INSPECTION CARRIED OUT. (TC NR 20070208003)

2007FA0000397	PIPER	LYC	BEARING	BROKEN
3/31/2007	PA24250	AEIO540*		MLG

BEARING ROD END BROKEN AT THREAD EXP BEARING (452377) CONDUIT BENT. CONTROL ASSY (455180).

2007FA0000383	PIPER	LYC	HORN	CRACKED
4/30/2007	PA24250	O540*	2039700	STABILIZER

FOUND STABILATOR HORN P/N 20397-00 SEVERELY CRACKED FROM THE INSIDE WHERE THE ATTACH BOLTS CONNECT THE BALANCE WEIGHT TUBE P/N 20398-02 AND STABILATOR TORQUE TUBE ASSEMBLY P/N 20203-03.

2007FA0000370	PIPER	LYC	ACK	BATTERY	LEAKING
4/27/2007	PA28236	O540J3A5		MN1300	ELT

BATTERIES LEAKED ACID/ALKALII, CORRODING CONTACTS SERVERLY AND RENDERING ELT INOPERABLE. BATTERIES WERE INSTALLED IN 2006. SHELF DATE ON BATTERIES WERE MAR 2011. ELT WAS NOT FOUND ACTIVATED. THIS IS THE THIRD CASE OF THIS I HAVE SEEN IN 2006/2007 AND THERE HAVE BEEN SEVERAL OTHERS IN THE PAST 5 YEARS. IN ALL CASES THE BATTERIES RENDERED THE ELT INOP PRIOR TO THE REPLACEMENT DATE (HALF OF SHELF LIFE IAW FAR 91.207 (C)). ALL PROBLEMS WERE DETECTED DURING ANNUAL INSPECTIONS OF ELT IAW FAR 91.207 D.

2007FA0000371	PIPER	LYC	ACK	BATTERY	LEAKING
4/27/2007	PA28236	O540J3A5		MN1300	ELT

BATTERIES LEAKED ACID/ALKALII, CORRODING CONTACTS SERVERLY AND RENDERING ELT INOPERABLE.BATTERIES WERE INSTALLED IN 2006. SHELF DATE ON BATTERIES WERE MAR 2011. ELT WAS NOT FOUND ACTIVATED. THIS IS THE THIRD CASE OF THIS I HAVE SEEN IN 2006/2007 AND THERE HAVE BEEN SEVERAL OTHERS IN THE PAST 5 YEARS. IN ALL CASES THE BATTERIES RENDERED THE ELT INOP PRIOR TO THE REPLACEMENT DATE (HALF OF SHELF LIFE I/A/W FAR 91.207 (C)). ALL PROBLEMS WERE DETECTED DURING ANNUAL INSPECTIONS OF ELT I/A/W FAR 91.207 D.

CA070308001	PIPER	LYC	FLOAT	WORN
3/2/2007	PA28R200	IO360C1C	68101002	FUEL CELL

(CAN) HOLE IN FLOAT WAS EXTREMELY WORN AND FLOAT FELL OFF. (TC NR 20070308001)

CA070126009	PIPER	LYC	BOLT	BROKEN
1/18/2007	PA31	TIO540A2B	402377	LT MLG

(CAN) WHILE TAXIING, THE UPPER TORQUE LINK BOLT BROKE WHICH ALLOWED THE LT MAIN WHEEL TO TURN SIDEWAYS. (TC NR 20070126009)

CA070127002	PIPER	LYC	CONTROL CABLE	FAILED
1/23/2007	PA31325	TIO540F2BD	454254	PROPELLER

(CAN) LT PROPELLER CONTROL CABLE FAILURE. THE PILOT NOTED THAT THE LT PROPELLER CONTROL WAS STIFF ON APPROACH. THE LT ENGINE AND PROPELLER CONTROLS WERE INSPECTED, MAINTENANCE DETERMINED THE LT PROPELLER CONTROL CABLE IN THE CABIN PEDESTAL HAD FAILED. THE PROPELLER CONTROL CABLE WIRES HAD TWISTED AND SEVERED APPROXIMATELY .2500 FROM THE SWAGED PORTION OF THE ROD END. THE LT PROPELLER CONTROL CABLE PN: 454-254 (ALT P/N: 24894-08) WAS REPLACED. THE AIRCRAFT RETURNED TO SERVICE. (TC NR 20070127002)

CA070216003	PIPER	LYC	BOLT	CORRODED
2/16/2007	PA31325	TIO540J2BD	AN17422A	ELEVATOR

(CAN) AT INSPECTION FOUND BOLTS (AN174-22A (6EA)) IN ELEVATOR TORQUE TUBE ASSEMBLY (40070-05) CORRODED. (TC NR 20070216003)

CA061219006	PIPER		CONVERTER	MALFUNCTIONED
1/23/2006	PA31350		KA39	NR 1 NAV COMM

(CAN) VOLTAGE CONVERTER SUPPLYING POWER TO NR 1 NAV COM FAILED CAUSING LOSS OF POWER TO RADIO (TC NR 20061219006)

CA070223003	PIPER	LYC	SEAL	LEAKING
2/21/2007	PA31350	LTIO540J2BD	UNK	CRANKSHAFT

(CAN) DURING A NORMAL WALK AROUND, OIL WAS OBSERVED ON THE COWLING. AN INVESTIGATION INTO THE OIL LEAK REVEALED THE CRANKSHAFT SEAL WAS BLOWN OUT. THE OIL SUMPS WERE DRAINED AND OIL FILTER CHECKED AND FOUND TO CONTAIN LARGE QUANTITIES OF METAL FILINGS. THE ENGINE WAS REMOVED FOR TEARDOWN REPORT AND OVERHAULED ENGINE INSTALLED. (TC NR 20070223003)

CA070209020	PIPER	LYC	VOLT REGULATOR	FAILED
2/7/2007	PA31350	TIO540J2BD	B002861	LT ALTERNATOR

(CAN) IN CRUISE FLIGHT, THE LT ALTERNATOR FAIL LIGHT CAME ON, AIRCRAFT RETURNED TO BASE FOR REPAIRS. VOLTAGE REGULATORS REPLACED WITH NEW, RT ALTERNATOR P/N ALU8521 REPLACED WITH OVERHAULED UNIT. GROUND RUNS CARRIED OUT TO CHECK FUNCTION, CHECKED OK. TEST FLIGHT CARRIED OUT AND SYSTEM CHECKED NORMAL. (TC NR 20070209020)

CA070226004	PIPER	LYC	TORQUE LINK	CRACKED
12/20/2006	PA31350	TIO540J2BD	4025700	LT MLG

(CAN) PILOT NOTICED A VIBRATION ON LT WHEEL. AIRCRAFT RETURNED TO RAMP. LT MAIN LANDING GEAR UPPER TORQUE LINK WAS FOUND CRACKED/BROKEN AT ATTACH LUG. THE TORQUE LINK WAS REPLACED. (TC NR 20070226004)

CA061219008	PIPER	LYC	INDICATOR	FAILED
12/12/2005	PA31350	TIO540J2BD		ENGINE RPM

(CAN) TACH CABLE FAILED WHILE ON TAXI CAUSING NO RPM INDICATION. (TC NR 20061219008)

CA070416007	PIPER	LYC	POWERPACK	FAILED
4/16/2007	PA31350	TIO540J2BD	OAS229307	HYD SYSTEM

(CAN) DURING A MAINTENANCE RUN AFTER WORK ON AN ENGINE THE MECHANICS DID A HYDRAULIC PUMP CHECK BY SELECTING HANDLE TO GEAR DOWN POSITION. THE HANDLE WOULD NOT RETURN TO THE NEUTRAL POSITION AS IS NORMAL. WHEN GEAR SWINGS WERE CARRIED OUT IN THE HANGAR THE OB GEAR DOORS WOULD ONLY PROCEED HALFWAY AND THEN SIT AND SHUDDER. A LOUD BANG WAS HEARD FROM THE POWERPAK AND THEN THE DOORS WOULD CLOSE OR OPEN AS SELECTED. THERE WAS NO PRIOR INDICATION OF PROBLEMS WITH THE POWERPACK. (TC NR 20070416007)

CA070403004	PIPER	LYC	PIPER	ATTACH BOLT	SHEARED
3/31/2007	PA31350	TIO540J2BD		AN3H7A	STEERING ARM

(CAN) DURING T/O ROLL DEPARTING CREW ABORTED T/O DUE A VIBRATION AND PULLING TO THE RIGHT. A/C TAXIED OFF RUNWAY, SHUTDOWN AND CREW VISUALLY INSPECTED A/C, NO DEFECTS NOTED. TAXIED BACK TO HANGER, MTCE WAS NOTIFIED. MAINTENANCE INSPECTION REVEALED (2) STEERING ARM ATTACH BOLTS SHEARED. NLG INSPECTED FOR OVER STEERAGE FROM GROUND HANDLING, NO OBSERVED DEFECTS NOTED. STEERING BOLTS REPLACED WITH NEW AND SYSTEM/TRAVEL/LANDING GEAR FUNCTION TESTS C/W . (TC NR 20070403004)

CA070423005	PIPER	LYC	CYLINDER	CRACKED
4/19/2007	PA31350	TIO540J2BD	LW12966	ENGINE

(CAN) OIL WAS NOTICED LEAKING FROM THE PUSHROD AREA. THE PUSHROD WAS REMOVED TO REPLACE THE SEALS. THE CRACK IN THE CYLINDER HEAD WAS FOUND THEN. THE CRACK RAN FROM THE BOTTOM OF THE CYLINDER HEAD SEAM TO ABOUT 4-5 INCHES ALONG THE HOLLOW WHERE THE PUSHROD TUBE RESIDES. THE CYLINDERS WERE MANUFACTURED NEW STEEL AT OVERHAUL. (TC NR 20070423005)

CA070115002	PIPER	LYC	HEATER	FAILED
1/9/2007	PA31350	TIO540J2BD	D405065D793	CABIN

(CAN) PILOT REPORTED EXHAUST ODOR WHEN FRONT COMBUSTION HEATER WAS OPERATING. SOOT COLLECTED ON THE PILOT AND CO-PILOT WINDSHIELDS ABOVE THE DEFROST VENTS. COMPLETED A HEATER DECAY TEST WHICH CONFIRMED THE BURNER CAN WAS DEFECTIVE. REMOVED THE HEATER FROM THE AIRCRAFT AND DISCOVERED 2 HOLES IN THE BURNER CAN APPROXIMATELY .5 INCH WIDE AND OPEN ABOUT .2500 INCH. HEATER WAS REPLACED WITH OVERHAULED UNIT AND AIRCRAFT RETURNED TO SERVICES. (TC NR 20070115002)

CA070119012	PIPER	LYC	TURBOCHARGER	LEAKING
1/13/2007	PA31350	TIO540J2BD	4091709001	ENGINE

(CAN) EXCESSIVE SMOKE FROM THE LT ENGINE WAS REPORTED BY PASSENGER AND GROUND CONTROL DURING APPROACH TO AIRPORT. FLIGHT CREW DECLARED AN EMERGENCY AND AIRCRAFT LANDED AND PASSENGERS IMMEDIATELY DISEMBARKED. AIRPORT EMERGENCY RESPONSE VEHICLES ATTENDED. NO VISIBLE FLAMES OR FIRE WAS EVIDENT PRIOR TO OR AFTER LANDING. AIRCRAFT WAS TOWED FROM THE RUNWAY TO MAINTENANCE FACILITY. MAINTENANCE INVESTIGATION REVEALED EXCESSIVE OIL IN THE TURBOCHARGER EXHAUST. TURBOCHARGER REPLACED WITH O`HAULED UNIT AND AIRCRAFT/ENGINE OPERATION CHECKED NORMAL. (TC NR 20070119012)

CA070120001	PIPER	LYC	BEARING	FAILED
1/18/2007	PA31350	TIO540J2BD		TURBOCHARGER

(CAN) RT ENGINE OIL CONSUMPTION HAD INCREASED, OIL RESIDUE FOUND ON EXHAUST STACK. INSPECTION FOUND THAT THE EXHAUST SIDE OF THE RT TURBOCHARGER WAS COVER IN OIL. FOUND THAT THE INNNER SUPPORT BEARING AND SEAL HAD FAILED ALLOWING OIL TO BE INTRODUCED TO THE HOT SIDE OF THE TURBO. REPLACED TURBOCHARGER, CHANGED ENGINE OIL, INSPECTED RT ENGINE OIL FILTER FOR METAL, NO FAULT FOUND. (TC NR 20070120001)

2007FA0000323	PIPER	LYC	DRAG LINK	JAMMED
3/1/2007	PA34200	IO360A1A	95829000	NLG

THE NOSE GEAR LINK ASSEMBLY JAMS INTERMITTENTLY, KEEPING THE FWD AND AFT NOSE GEAR DRAG LINKS FROM LOCKING COMPLETELY. REFER TO SB NR 1123B. (K)

CA070207006	PIPER	CONT	TRUNNION	FAILED
1/20/2006	PA34220T	TSIO360KB		NLG

(CAN) NOSE GEAR TRUNNION DAMAGED AND REPAIRED. (TC NR 20070207006)

CA060621005	PIPER	LYC	FLANGE	CRACKED
6/20/2006	PA44180	O360A1H	86245023	CARB MOUNT

(CAN) DURING ROUTINE INSPECTION OF RT ENGINE A .5 INCH CRACK WAS OBSERVED ALONG A SCRIBE LINE ON THE FORWARD FACE OF THE CARB AIR BOX NEAR TO THE LOWER MOUNTING BOLT HOLE . AFTER REMOVAL, (2) ADDITIONAL CRACKS WERE OBSERVED ALONG A SCRIBE MARK NEAR TO THE UPPER MOUNTING HOLES. THESE CRACKS TRAVERSED NEARLY COMPLETELY ACROSS THE MOUNTING FLANGE FACE. IN ADDITION THE MOUNTING HOLE ALIGNMENT BETWEEN THE MOUNTING FLANGE AND THE INNER DOUBLER WERE OFFSET BY APPROXIMATELY .0312 INCH. THIS MAY HAVE INDUCED STRESS THAT LED TO CRACK FORMATION ALONG THESE SCRIBE MARKS. BEFORE A NEW ASSEMBLY WAS INSTALLED THE MOUNTING HOLES WERE REAMED TO ALIGN THE HOLES IN BOTH PLATES. (TC NR 20060621005)

CA070410004	PZLWAR	LYC	BELLCRANK	CRACKED
4/6/2007	PZL104W35A	IO540K1B5		TE FLAPS

(CAN) LOWER LT FLAP ACTUATOR BELLCRANK SUPPORT BRACKET CRACKED AT UPPER END. WHEN FLAP IS SUBJECTED TO A SIMULATED AIR LOAD, THE SUPPORT BRACKET FLEXES AND THE CRACK VISIBLY OPENS. THIS BRACKET HAS EVIDENCE OF PREVIOUS REPAIR (A DOUBLER IS PRESENT AT THE LOWER END). NONE OF THE OTHER (3) SUPPORT BRACKETS HAVE ANY DOUBLERS OR SHOW ANY EVIDENCE OF CRACKS. (TC NR 20070410004)

CA070426003	RKWELL	LYC	ROCKER COVER	SEPARATED
4/26/2007	700	TIO540R2AD	72242	ENGINE

(CAN) SHORTLY AFTER TAKEOFF, THE PILOTS EXPERIENCED A POWER LOSS IN THE LT ENGINE, HOWEVER THE ENGINE REMAINED RUNNING. THEY RETURNED TO THE NEARBY AIRPORT WITHOUT INCIDENT. MAINTENANCE INSPECTED THE ENGINE AND FOUND THAT NR 6 CYLINDER ROCKER COVER HAD BEEN DAMAGED. THE COVER WAS REMOVED AND FOUND THAT THE RETAINING CLIP THAT HOLDS THE ROCKER SHAFTS IN PLACE FOR THE INTAKE AND EXHAUST VALVES HAD FALLEN OFF. THE ROCKER SHAFT FOR THE INTAKE VALVE HAD FALLEN OUT ALLOWING THE ROCKER TO BECOME DISLODGED THEREBY DISABLING THAT CYLINDER. THE VALVE ASSEMBLY WAS INSPECTED AND REINSTALLED WITH A REPLACEMENT VALVE COVER AND GASKET. GROUND RUNS COMPLETED AND ALL CHECKS FOUND SERVICEABLE. AS NOTED ABOVE, THE ENGINE IS A FRESH OVERHAUL WITH 24HRS IN SERVICE AND WAS RUNNING SMOOTHLY. ALL ROCKER COVERS ON THIS ENGINE WERE REMOVED AND 4 OTHER COVERS SHOWED POOR BONDING OF THE RETAINING CLIP AND REPLACE WITH USED SERVICEABLE COVERS. (TC NR 20070426003)

CA060915001	ROBSIN	LYC	MUFFLER	CRACKED
9/14/2006	R44	O540F1B5	C1963	EXHAUST

(CAN) WHILE PERFORMING CF90-3R2 ON THE MUFFLER ASSEMBLY THE EXHAUST SHROUD WAS REMOVED AND A (2) INCH CRACK WAS FOUND WHERE THE EXHAUST PIPE JOINS THE MUFFLER. (TC NR 20060915001)

CA070220003	ROBSIN	LYC	ROBSIN	BEARING	DEFECTIVE
2/18/2007	R44	O540F1B5		C04111	DRIVESHAFT

(CAN) DAMPER HANGAR BEARING INNER RACE ROTATED ON DRIVESHAFT ASSY. BEARING REPLACED ON DRIVE SHAFT ASSY WITH SERVICABLE UNIT. (TC NR 20070220003)

CA070207008	ROBSIN	LYC	BUNGEE	DISCONNECTED
2/2/2007	R44RAVENII	IO540AE1A5	A9182	FLT CONTROLS

(CAN) UPON INSPECTION, BUNGEE FOUND HANGING DOWN AND DISCONNECTED FROM THE FLIGHT CONTROL. THERE WERE NO FLIGHT PERFORMANCE ISSUES REPORTED. MINOR SCRAPES FOUND IN CONTROL TUBE PAINT. CORDS WERE CHECKED FOR DAMAGE AND RECONNECTED. (TC NR 20070207008)

CA070213008	ROBSIN	LYC	SERVO	LEAKING
2/4/2007	R44RAVENII	IO540AE1A5	D2121	MAIN ROTOR

(CAN) RT LATERAL SERVO FOUND LEAKING BY ENGINEER DURING DI. SERVO REMOVED FOR REPAIR AND SERVICABLE UNIT INSTALLED. (TC NR 20070213008)

CA070226011	ROBSIN	LYC	ROBSIN	RETAINER	CRACKED
2/24/2007	R44RAVENII	IO540AE1A5		C1664	CLUTCH

(CAN) CRACKS AT OUTER RING BOLT HOLES. CLUTCH ASSY REMOVED AND IS BEING SENT TO MFG FOR WARRANTY. (TC NR 20070226011)

CA070306001	ROBSIN	LYC	RESERVOIR	LEAKING
2/23/2007	R44RAVENII	IO540AE1A5		HYD SYSTEM

(CAN) DURING INSPECTION HYDRAULIC FLUID FOUND VERY LOW, DETERMINED FLUID WAS LEAKING OUT OF THE VENT CAP ON HYDRAULIC RESERVOIR. FLUID TOPPED UP TO CENTER OF SIGHT GLASS. AIRCRAFT GROUND RAN, DETERMINED FLUID WAS RISING IN RESERVOIR AND VENTING OUT OF VENT CAP. RESERVOIR SENT TO MFG. REINSTALLED AFTER REPAIR, GROUND RAN AND FOUND HYDRAULIC LEVEL TO STAY AT CENTER OF SIGHT GLASS. (TC NR 20070306001)

CA070307010	ROBSIN	LYC	WIRE	CHAFED
3/7/2007	R44RAVENII	IO540AE1A5	WIRE	MAGNETO

(CAN) GOVERNOR WAS LAZY AND SNAGGED BY PILOT. UPON FURTHER INVESTIGATION, THE MAGNETO WAS REMOVED AND PRIMARY COIL WIRE WAS TOUCHING AND CHAFING ON TACH POINT CONNECTOR. THIS MAY BE THE POSSIBLE CAUSE FOR LAZY GOVERNOR. NEW MAGNETO INSTALLED PROBLEM RECTIFIED. MAGNETO SENT BACK FOR WARRANTY. (TC NR 20070307010)

CA070122002	ROBSIN	LYC	HEAT SHIELD	CRACKED
1/22/2007	R44RAVENII	IO540AE1A5	D3171	

(CAN) DURING A ROUTINE 100 HR ENGINE/AIRFRAME INSPECTION, IT WAS NOTED THAT THE SUBJECT HEAT SHIELD, THAT IS INSTALLED ON THE ENGINE EXHAUST TAILPIPE, WAS FOUND CRACKED. THE CRACK ORIGINATED IN THE DOUBLER AREA WHERE THE FORWARD CLAMP IS ATTACHED. THE CRACK LOOKS LIKE IT HAS ORIGINATED FROM A RIVET THAT ATTACHES THE DOUBLER AND BRACKET, WHICH PROVIDES A MEANS TO ATTACH THE CLAMP TO THE EXHAUST TAILPIPE. THE PART IN QUESTION HAS 151.3 HOURS SINCE NEW ON IT. THE AIRCRAFT IN QUESTION HAS 495.0 HOURS SINCE NEW. THE PART WILL BE SUBMITTED TO MFG FOR WARRANTY. THIS IS THE 3RD HEAT SHIELD TO BE REPLACED ON THIS AIRCRAFT SINCE IT WAS NEW. THE PRIOR HEAT SHIELDS WHERE REPLACED AT 343.5 AIRCRAFT HOURS, AND 203.2 AIRCRAFT HOURS. THE HEAT SHIELD IS ATTACHED TO THE EXHAUST TAILPIPE BY THE MEANS OF (2) HOSE TYPE CLAMPS. THE CRACKS HAVE ALL ORIGINATED AT THE FWD CLAMP AREA, AND THE CONCERN IS THAT IF BOTH CLAMP AREAS FAIL, THE SUBJECT HEAT SHIELD COULD DEPART THE AIRCRAFT AND ENTER THE TAIL ROTOR. WE HAVE TAKEN NOTE OF THIS WEAK AREA AND HAVE STEPPED UP OUR VISUAL INSPECTIONS TO SPOT CRACKS IN THEIR EARLY DEVELOPMENT. (TC NR 20070122002)

CA070122003	ROBSIN	LYC	SHROUD	CRACKED
1/22/2007	R44RAVENII	IO540AE1A5	D3807	ENGINE BAY

(CAN) DURING A ROUTINE 100 HR ENGINE/AIRFRAME INSP, IT WAS NOTED THAT THE SUBJECT SHROUD WAS CRACKED JUST AFT OF THE UPPER/AFT MOUNTING SCREW LOCATION. THE SHROUD IS PART OF A SERIES OF SHROUD COVERS THAT SURROUND THE ENGINE FOR COOLING PURPOSES. THE SHROUD HAS 201.8 HOURS

SINCE NEW ON IT. THE AIRCRAFT HAS ACCUMULATED 495.0 HOURS SINCE NEW. THIS IS THE SECOND TIME THAT THIS PARTICULAR SHROUD HAS BEEN REPLACED. THE ORIGINAL SHROUD THAT CAME NEW WITH THE AIRCRAFT WAS FOUND CRACKED IN THE SAME LOCATION, AND REPLACED AT 293.2 AIRCRAFT HOURS. THIS SEEMS TO BE A WEAK AREA THAT IS SUBJECTED TO ENGINE VIBRATION. HAVE TAKEN NOTE OF THIS WEAK AREA AND HAVE STEPPED UP OUR VISUAL INSPECTIONS TO SPOT CRACKS IN THEIR EARLY DEVELOPMENT. (TC20070122003)

CA070122004	ROBSIN	LYC	RIB	CRACKED
1/22/2007	R44RAVENII	IO540AE1A5	C2617C2618	FUSELAGE

(CAN) DURING A ROUTINE 100 HOUR ENGINE/AIRFRAME INSPECTION, IT WAS NOTED THAT THE SUBJECT PARTS WHERE CRACKED. THE CRACKS WHERE FOUND AT THE FORWARD ANCHOR NUT LOCTIONS. THE RIBS ARE PART OF THE STRUCTURE THAT ENCLOSES THAT MAST AREA. THE RIBS WHERE REPLACED WITH NEW ASSEMBLIES. THE AIRCRAFT IN QUESTION HAS 495.0 HRS SINCE NEW. (TC NR 20070122004)

CA070117006	ROBSIN	LYC	SPRAG CLUTCH	CRACKED
1/17/2007	R44RAVENII	IO540AE1A5	C1883	MAIN ROTOR

(CAN) DURING AN AES 1000HR INSPECTION, A CRACK WAS FOUND ON THE CAGE IN THE MIDDLE OF (1) CROSSBAR. (TC NR 20070117006)

CA070402002	SAAB	GE	LINE	CHAFED
4/2/2007	340B	CT79B	7229160003	HYD SYSTEM

(CAN) HYDRAULIC FLUID WAS NOTICED ROUND ACCESS PANEL 151CB RT. INVESTIGATION REVEALED A WEAR MARK AND PIN HOLE IN A HYDRAULIC LINE UNDER THE PANEL. FURTHER INVESTIGATION INDICATED THAT AN AJACENT PANEL BONDING STRAP HAD LOOPED WHEN THE PANEL WAS CLOSED AND HAD BEEN RUBBING ON THE HYDRAULIC LINE. THAT THE STRAP WOULD CHAFE ON THE HYDRAULIC LINE WAS NOT OBVIOUS WHEN THE PANEL WAS CLOSED. (TC NR 20070402002)

CA070209021	SAAB	GE	BLADE	SEPARATED
2/7/2007	340B	CT79B		TURBINE DISK

(CAN) AFTER REACHING CRUISING ALTITUDE OF 23000 FT THE LT ENGINE SURGED AND THE LOW OIL PRESSURE LIGHT ILLUMINATED. THE ENGINE WAS SHUTDOWN AND THE FLIGHT CONTINUED TO WHERE AN UNEVENTFULL LANDING WAS MADE. THE ENGINE STRIP SHOWED THAT THE COMPRESSOR STAGE ONE TURBINE DISK HAD LOST A BLADE. THE REMAINING BLADES HAD SUFFERED EXTENSIVE DAMAGE, AS TOO HAD THE STATOR ASSY. THE ENGINE AND COMPONENTS HAVE BEEN RETURNED TO GE (ENGINE OEM) FOR INVESTIGATION. (TC NR 20070209021)

CA070221006	SKRSKY	GE	MOTOR	INOPERATIVE
2/13/2007	S61N	CT581402	4546A	LANDING GEAR

(CAN) ON PRELANDING CHECK, MAIN LANGDNG GEAR FAILED TO EXTEND. EMERGENCY BLOW DOWN PROCEDURE WAS FOLLOWED AND AIRCRAFT LANDED WITHOUT FURTHER INCIDENT. INVESTIGATION DETERMINED THAT THE ELECTRIC MOTOR THAT DRIVES THE MLG HYDRAULIC PUMP HAD FAILED AND TRIPPED THE CIRCUIT BREAKER. (TC NR 20070221006)

CA061218007	SKRSKY	PWA	OIL SYSTEM	MALFUNCTIONED
12/2/2006	S64E	JFTD12A4A		ENGINE

(CAN) THE AIRCRAFT WAS INVOLVED IN HELICOPTER LOGGING OPERATIONS. AS THE AIRCRAFT WAS APPROACHING THE LOG LANDING WITH A LOAD, THE FLIGHT CREW WERE ALERTED BY A LOW OIL PRESSURE WARNING LIGHT FOR THE NR (2) ENGINE. A SCAN OF THE CORRESPONDING OIL PRESSURE INDICATOR CONFIRMED THE ENGINE OIL PRESSURE HAD DROPPED TO 20 PSI. AS THE PILOT RELEASED THE LOAD OF LOGS ON THE LOG LANDING THE OIL PRESSURE RETURNED TO NORMAL. THE FLIGHT CREW ELECTED TO RETURN TO THE SERVICE LANDING TO HAVE THE MAINT PERSONNEL INVESTIGATE THE PROBLEM. ENROUTE THE LOW OIL PRESSURE LIGHT ILLUMINATED AGAIN WITH THE CORRESPONDING OIL PRESSURE INDICATION DROPPING TO 20 PSI. AT THIS TIME THE FLIGHT CREW ELECTED TO SHUTDOWN THE NR (2) ENGINE AS A PRECAUTIONARY MEASURE. WITH THE ENGINE SECURED THE AC MADE AN UNEVENTFUL SINGLE ENGINE LANDING. A COMPLETE INSPECTION AND TROUBLESHOOTING OF THE ENGINE OIL PRESSURE SYSTEM AND RELATED INDICATING SYSTEMS REVEALED NOTHING ABNORMAL. AT THAT POINT IT WAS DETERMINED THE PROBLEM WAS INTERNAL

AND BEYOND THE SCOPE OF CAPABILITIES OF FIELD PERSONNEL. SUBSEQUENTLY THE ENGINE WAS REPLACED AND THE AIRCRAFT WAS RETURNED TO SERVICE. THE SUBJECT ENGINE WAS RETURNED FOR FURTHER INVESTIGATION AND REPAIR.

CA061218010	SKRSKY	PWA	BOLT	DAMAGED
11/21/2006	S64E	JFTD12A4A	NAS146A37	TAIL BOOM

(CAN) THE AIRCRAFT WAS INVOLVED IN HELICOPTER LOGGING OPERATIONS. THE YARDING PROFILE WAS A DOWN HILL FLIGHT FROM THE HARVEST CUT BLOCK TO A ROAD SIDE LOG LANDING. AFTER ENCOUNTERING DOWN FLOWING WIND CONDITIONS THROUGH OUT THE FIRST LOGGING CYCLE OF THE DAY THE FLIGHT CREW ELECTED TO SHUTDOWN AND WAIT FOR MORE FAVORABLE WIND CONDITIONS. DURING A ROUTINE POST FLIGHT INSPECTION OF THE AIRCRAFT, THE MAINTENANCE PERSONNEL WERE CHECKING THE HORIZONTAL STABILIZER FOR GENERAL CONDITION AND SECURITY WHEN THEY DISCOVERED IT TO BE LOOSE. FURTHER INSPECTION OF THE STABILIZER TO PYLON FORWARD ATTACHMENT FITTINGS REVEALED THE BOLT THAT ATTACHES THE (2) FITTINGS WAS MISSING. A VISUAL INSPECTION OF THE ENTIRE AIRCRAFT UNCOVERED NO IMPACT DAMAGE FROM THE DEPARTING BOLT OR ANY OTHER DAMAGE. A THOROUGH INSPECTION AND A TORQUE CHECK OF THE AFT STABILIZER ATTACHMENT BOLT REVEALED NO FURTHER DISCREPANCIES. AFTER INSTALLING NEW STABILIZER FWD MOUNT ATTACHMENT HARDWARE THE AIRCRAFT WAS RETURNED TO SERVICE. (TC NR 20061218010)

CA070115006	SKRSKY		GEARBOX	MALFUNCTIONED
12/14/2006	S92A		92351510042	MAIN ROTOR

(CAN) MAIN GEARBOX HAD SEVERAL OCCURENCES OF OIL PRESSURE DROPPING TO THE PRECAUTIONARY RANGE IN OPERATION. (TC NR 20070115006)

CA070123007	SKRSKY	SKRSKY	CONE	SPLIT
1/6/2007	S92A		9235806343101	TAILROTOR G/B

(CAN) ON 06 JAN 07, THE TAIL ROTOR HEAD WAS IN PROCESS OF BEING REPLACED WHEN IT WAS NOTICED THAT THE IB SET OF SPLIT CONES WHICH CENTER AND SUPPORT THE TAIL ROTOR HUB LOADS WERE MISSING. FURTHER INVESTIGATION FOUND THAT WHEN THIS TAIL GEARBOX WAS INSTALLED 596 HOURS PREVIOUS ON 18 JUNE 06 THE MFG MM DID NOT HAVE ANY REFERENCE TO THE INNER SPLIT CONES. NO MENTION OF THEM IN THE REMOVAL/INSTALLATION INSTRUCTION, OR THE REQUIRED PARTS LISTING OR ON ANY ILLUSTRATION.(NOTE: MFG MM HAVE SINCE BEEN UPDATED AS OF SEPT 06 TO INCLUDE THE IB SPLIT CONES) FIELDS FOR P/N NOT LONG ENOUGH TGB P/N 92358-06100-043 (TC NR 20070123007)

CA070205001	SNIAS	TMECA	SPRING	BROKEN
2/2/2007	AS350*	ARRIEL1B	704A33341003	ANTI VIBRATION

(CAN) WE ARE DOING A 12 YEAR INSPECTION ON AIRCRAFT, AS WELL AS SEND IT OUT FOR PAINT. THE MAIN ROTOR ANTI-VIBRATOR WAS REMOVED FOR CHECK AND MODIFICATION. WHEN SPRINGS WERE REMOVED, ONE WAS FOUND TO BE BROKEN 40 MM FROM OB END. THIS AREA IS HIDDEN BEHIND SIDE COVERS. (TC NR 20070205001)

CA070118011	SNIAS	TMECA	SERVO	UNSERVICEABLE
1/4/2007	AS350B	ARRIEL1B	AC67244	ROTOR

(CAN) DURING HYDRAULIC PRE-FLIGHT CHECK CAUSED CYCLIC TO MOVE 4-5 INCHES TOWARDS 8 O'CLOCK POSITION. SERVO REMOVED SERVICEABLE UNIT INSTALLED. SERVO SENT OUT FOR REPAIR AWAITING TEARDOWN REPORT. (TC NR 20070118011)

CA070118010	SNIAS	TMECA	BOLT	DAMAGED
1/18/2007	AS350B1	ARRIEL1D	350A13111620	TAILBOOM

(CAN) THIS IS (1) OF (2) BOLTS USED TO RETAIN THE HORIZONTAL STAB. TO THE TAIL BOOM OF THE HELICOPTER. THE THREADED SECTION OF THE BOLT AND THE NUT WERE FOUND MISSING. IT APPEARS THAT THE THREADED SECTION OF THE BOLT HAD BEEN CRACKED FOR SOME TIME BEFORE DEPARTING. (TC NR 20070118010)

CA070108004	SNIAS	TMECA	CASE HALF	WORN
12/21/2006	AS350B2	ARRIEL1D1	350A32315520	GEAR BOX

(CAN) HALF SHELLS WERE WORN OUT DUE TO MOVEMENT OF THE SUN GEAR, WEARING S STEP INTO THE SHELLS. THERE IS NO PUBLISHED LIMITS ON THE SHELLS AND WE HAVE ASKED ECL FOR THIS INFORMATION. THERE IS NORMAL WEAR IN THIS AREA, THIS WAS A BIT EXCESSIVE WITH SLIVERS OF METAL COMING OFF THE PARTS. THIS WOULD HAVE LEAD TO A CHIP LIGHT EVENTUALLY. (TC NR 20070108004)

CA070108007	SNIAS	TMECA	SWITCH	INTERMITTENT
12/19/2006	AS350B2	ARRIEL1D1	MS2771923	COLLECTIVE

(CAN) PROBLEM REPORTED BY PILOT IN DECEMBER ABOUT INTERMITTENT SWITCH. THIS HAPPENED ONCE IN THE FIELD. THE A/C WAS BROUGHT IN FOR AN INSPECTION AT THE END OF DECEMBER/06 AND THE SWITCH WAS REPLACED. BAD SWITCHES, SHOULD BE REPLACED WITH SOMETHING BETTER. (TC NR 20070108007)

CA070329001	SNIAS	TMECA	SNIAS	COUPLING	CRACKED
3/26/2007	AS350B2	ARRIEL1D1		350A35105901	M/R DRIVESHAFT

(CAN) CRACK IN DISC LAMINATE FOUND DURING POST FLIGHT (DAILY) INSPECTION. (TC NR 20070329001)

CA060725005	SNIAS	TMECA	ENGINE	MAKING METAL
7/23/2006	AS350B2	ARRIEL1D1		

(CAN) ON APPROACH, THE ENGINE CHIP LIGHT ILLUMINATED. THE PILOT LANDED THE HELICOPTER NORMALLY. THE ENGINE CHIP PLUGS WERE ALL REMOVED AND DEBRIS (METAL) WAS FOUND ON ALL PLUGS. METAL WAS ALSO FOUND ENTRAPPED IN THE OIL FILTER. THIS ENGINE WAS LAST SHOPPED IN MAY 2005 FOR MO2, MO4, MO5 AND FREEWHEEL OVERHAUL. THE TSO OF THE OVERHAULED COMPONENTS IS 295.9 HOURS (TC NR 20060725005)

CA070221008	SNIAS	TMECA	PULLEY	LOOSE
9/4/2006	AS350B2	ARRIEL1D1	350A35109222	HYDRAULIC

(CAN) HYDRAULIC PULLEY BEARING CONTACT SURFACE WORN CAUSING PULLEY WOBBLE AND LOSS OF BELT TENSION. (CLICKING) NOISE DURING START UP AND SHUT DOWN, PULLEY AND BEARING REPLACED NEW. (TC NR 20070221008)

CA070226009	SNIAS	TMECA	CROSSBEAM	CRACKED
1/31/2007	AS350B2	ARRIEL1D1	350A3821003	FUSELAGE

(CAN) IAW THE AD 96-156-071 (B) R1 VISUAL INSPECTION EVERY 30 HOURS OR 150 LANDINGS. THE CRACKS WERE FOUND ON THE VISUAL. (TC NR 20070226009)

2007FA0000360	SNIAS	BRACKET	BROKEN
4/7/2007	AS350B3	N325400A	FUSELAGE

DURING 100 HR INSPECTION, THE MECHANIC REACHED TO UNSCREW THE OIL FILTER AND THE BRACKET BROKE OFF IN HIS HAND. REPLACED UNIT, THE ENTIRE BREAK LOOKED FRESH EVEN WITH 10X MAGNIFICATION. IT IS A POT METAL BRACKET. (K)

CA070213009	SNIAS	TMECA	SERVO	LEAKING
1/13/2007	AS350B3	ARRIEL2B	704A44831142	TAIL ROTOR

(CAN) SERVO FOUND LEAKING BY ENGINEER ON POST FLIGHT INSP. SERVO REPLACED WITH SERVICABLE UNIT. SERVO WAS SENT OUT FOR REPAIR. THE SERVO WAS OVERHAULED AND IS BEING SHIPPED BACK TO US FOR INSTALLATION. (TC NR 20070213009)

CA070222004	SNIAS	TMECA	MODULE	MALFUNCTIONED
2/19/2007	AS350BA	ARRIEL1B	70BM031090	ENGINE

(CAN) POSSIBLE T1 OR T2 MO3 TURBINE RUB. REMOVED MO3 AND SEND TO MFG FOR INVESTIGATION. THE TURBINE RUB WAS NOTICED AFTER SHUTDOWN OF THE ENGINE. (TC NR 20070222004)

CA070204001	SNIAS	LYC	CHANNEL	CRACKED
2/1/2007	AS350D	LTS101600A2		FUSELAGE

(CAN) DURING AN UNSCHEDULED MAINTENANCE PROCEDURE OF THE VIBRATION DAMPER ASSEMBLIES UNDER THE CABIN FLOOR, IT WAS FOUND THROUGH THE USE OF A BOROSCOPE THAT THE IB CHANNELS OF THE LATERAL SUPPORT STRUCTURE WERE CRACKED AT THE UPPER ENDS. SUBSEQUENT INSPECTION OF ALL OUR AIRCRAFT REVEALED SIMILAR DISCREPANCIES. (TC NR 20070204001)

2007FA0000329	SOCATA	PWA	FITTING	CORRODED
4/6/2007	TBM700	PT6A64	T700A5530072102	STABILIZER

DURING A 6000HR/10 YEAR CORROSION INSPECTION AD2007-06-11 WAS BEING COMPLIED IAW AD AND MANDATORY SB70-104, AMENDMENT 2. AFTER COMPLETING THE PENETRANT INSPECTION, NO CRACKS WERE DETECTED IN THE SPECIFIED AREAS HOWEVER THE FITTINGS LISTED IN BLOCK 5 WERE REMOVED FROM SERVICE FOR LIGHT PITTING CORROSION. RECENTLY IN OUR FACILITY, THERE WAS A LEVEL 3 NDT RECURRENT COURSE BEING GIVEN AND THE REMOVED FITTINGS WERE CRACK CHECKED USING A ROTARY TOOL FOR BOLT HOLE EDDY CURRENT SET UP ON /030 CORNER EDM NOTCH AS A REFERENCE STANDARD. AT THIS TIME THERE WERE CORROSION PITTING CRACKS DETECTED IN BOTH FITTINGS. THE INSPECTION CRITERIA STATED IN AD AND SB ARE INSUFFICIENT FOR CRACK DETECTION IN THIS AREA. POSSIBLY THE BOLT HOLE CRACK DETECTION METHOD USING THE ABOVE MENTIONED ROTARY TOOL SHOULD BE IMPLEMENTED IN PLACE OF THE DYE PENETRANT. THIS IS A CRITICAL AREA AND FAILURE OF EITHER FITTING COULD CAUSE TEMPORARY OR PERMANENT LOSS OF RUDDER CONTROL AND AIRCRAFT STABILITY. A TTR FORM HAS BEEN FILED WITH MFG. (K)

CA070226003	STOLAM	LYC	PROPELLER	CORRODED
12/12/2006	RC3	GO480G1A6	HCA3V203	

(CAN) PROP COME IN FOR 10 YEAR OVERHAUL. PIS, CLEAN, NDT, VISUAL INSPECTION, LUB UNSERVICEABLE DUE TO RUST. LINK ARMS P/N 861-3C WORN UNSERVICEABLE, P/N A971 BEARING CORRODED UNSERVICEABLE P/N VL9333C-5 BLADE BORES CORRODED HAD TO BE REAMED AND RE-SHOT PEENED. THIS PROP NORMALLY WOULD COST APPROXIMATELY NR 4,500 TO OVERHAUL WITH REPLACED PARTS AND REWORKED BLADE BORES. THIS OVERHAUL HAS BECOME NR 14,000. (TC NR 20070226003)

CA070424011	SWRNGN	GARRTT	IDLER GEAR	LOOSE
4/18/2007	SA226*	TPE33110UA		TORQUE SENSOR

(CAN) FOUND ON TAKEOFF ROLL, THE RT CHIP LIGHT CAME ON THROUGH 70 KTS. THE TAKEOFF WAS ABORTED AND THE AC TAXIED BACK TO THE RAMP WITHOUT ANY FURTHER INCIDENT. AT THIS TIME MAINT HAD DONE A SOAP SAMPLE AND FOUND METAL IN THE OIL FILTER. WHEN THE ENGINE WAS TAKEN APART THE TORQUE SENSOR IDLER GEAR WAS NOTICED TO BE LOOSE DUE TO THE BEARING HAD FAILED ON THE IDLER GEAR THAT IS ATTACHED TO THE TORQUE SENSOR. (TC NR 20070424011)

CA070403002	SWRNGN	GARRTT	WINDSHIELD	CRACKED
4/1/2007	SA226AT	TPE33110UA	2719442004	COCKPIT

(CAN) THE FLIGHT CREW OBSERVED THE LT HEATED WINDSHEILD DELAMINATE AND CRACK DURING FLIGHT. THEY CARRIED OUT THEIR EMERGENCY PROCEDURES AND LANDED AT THEIR POINT OF DESTINATION. MAINTENANCE REPLACED THE WINDSHEILD. NO REASON FOR THE FAILURE (IE IMPACT) COULD BE DETERMINED. THIS IS ONE OF MANY FAILURES OF THIS WINDSHEILD PN INCURRED BY THIS OPERATOR. MULTIPLE ATTEMPTS TO CONTACT THE MFG HAS RESULTED IN NO RESPONSE. (TC NR 20070403002)

CA070117003	SWRNGN	GARRTT	WINDSHIELD	DELAMINATED
1/15/2007	SA226TC	TPE33110UA	2719442004	COCKPIT

(CAN) DURING FLIGHT THE FLIGHT CREW HEARD A LOUD CRACK FROM THE RT HEATED WINDSHIELD. THEY IMMEDIATELY NOTICED THE WINDOW PANES BEGIN TO DELAMINATE. NO OBJECT WAS WITNESSED HITTING THE AIRCRAFT OR WINDSHIELD. THE AIRCRAFT LANDED SAFELY AND THEN RETURNED TO BASE ON A FLIGHT PERMIT FOR REPAIRS. NO CRACKING IN THE WINDOW WAS EVIDENT. THE WINDOW WAS REPLACED BY MAINTENANCE. (TC NR 20070117003)

CA070208005	SWRNGN	GARRTT	WINDSHIELD	CRACKED
2/5/2007	SA226TC	TPE33110UA	2719442004	COCKPIT

(CAN) DURING TAXI WITH THE WINDSHEILD HEAT SELECTED ON THE RT COCKPIT HEATED WINDSHEILD CRACKED. THE FLIGHTCREW RETURNED TO THE TERMINAL AND THE AIRCRAFT WINDOW HAS BEEN REPALCED

BY MAINTENANCE. NO CAUSE OF THE CRACKED GLASS COULD BE DETERMINED. THIS IS THE THIRD FAILURE OF A HEATED WINDSHEID THIS COMPANY HAS INCURRED SINCE JAN 1, 2007. 12 WERE REPORTED IN 2006. OTHER AIRCRAFT OPERATORS OF THIS TYPE OF AIRCRAFT HAVE BEEN CONTACTED AND ARE INCURRING SIMILAR FAILURE RATES. (TC NR 20070208005)

CA070219004	SWRNGN		WINDSHIELD	CRACKED
2/4/2007	SA227AC		2719442003	COCKPIT

(CAN) WHILE IN CRUISE FLIGHT ENROUTE, THE CAPTAIN'S WINDSCREEN CRACKED IN THE OUTER PANE. THE AIRCRAFT CONTINUED ON AND LANDED WITHOUT INCIDENT. THE WINDSHIELD WAS REPLACED WITH AN OVERHAULED ASSEMBLY AND THE AIRCRAFT RELEASED. (TC 20070219004)

CA070219005	SWRNGN	GARRTT	MOUNT	CRACKED
2/18/2007	SA227AC	TPE33111U	276211497	ENGINE

(CAN) DURING INSPECTION A CRACK WAS DISCOVERED IN THE UPPER AFT OUTBOARD WELD ASSEMBLY ON THE ENGINE MOUNT TRUSS REQUIRING REPLACEMENT OF THE MOUNT ASSEMBLY. (TC NR 20070219005)

2007FA0000324	TCRAFT	CONT	PLATE	LOOSE
3/17/2007	BC12D	O200A		LT BRAKE

WHEN BRAKES WERE APPLIED AFTER LANDING. IT APPEARS THAT THE PINS HOLD THE BACK PLATE ALLOW IT TO SHIFT ENOUGH TO HAVE POSSIBLY MADE CONTACT WITH THE BRAKE ACCUATOR ARM AND NOT ALLOW IT TO RELEASE. (K)

CA070214002	UROCOP	TMECA	CABLE	FAILED
2/7/2007	EC120B	ARRIU2F	55CF8891	THROTTLE

(CAN) THROTTLE FROZEN IN THE FULL OPEN POSITION. FUEL FIRE WALL SHUT OFF USED TO CONTAIN ENGINE. (TC NR 20070214002)

END OF REPORTS