U.S. Department of Transportation
Federal Aviation Administration

AFS-600
Regulatory Support Division

ADVISORY CIRCULAR

43-16A

AVIATION MAINTENANCE ALERTS

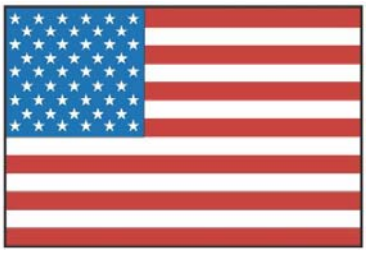

ALERT NUMBER 348

JULY 2007

CONTENTS

AIRPLANES

AERONCA 1
BEECH 1
BOEING 2
CESSNA 2

AIR NOTES

INTERNET SERVICE DIFFICULTY REPORTING (iSDR) WEB SITE.....8
IF YOU WANT TO CONTACT US.....10
AVIATION SERVICE DIFFICULTY REPORTS 10

U.S. DEPARTMENT OF TRANSPORTATION
FEDERAL AVIATION ADMINISTRATION
WASHINGTON, DC 20590

AVIATION MAINTENANCE ALERTS

The Aviation Maintenance Alerts provide a common communication channel through which the aviation community can economically interchange service experience, cooperating in the improvement of aeronautical product durability, reliability, and safety. This publication is prepared from information submitted by those who operate and maintain civil aeronautical products. The contents include items that have been reported as significant, but have not been evaluated fully by the time the material went to press. As additional facts such as cause and corrective action are identified, the data will be published in subsequent issues of the Alerts. This procedure gives Alerts' readers prompt notice of conditions reported via a Malfunction or Defect Report (M or D) or a Service Difficulty Report (SDR). Your comments and suggestions for improvement are always welcome. Send to: FAA; ATTN: Aviation Data Systems Branch (AFS-620); P.O. Box 25082; Oklahoma City, OK 73125-5029.

(Editor's notes are provided for editorial clarification and enhancement within an article. They will always be recognized as italicized words bordered by parentheses.)

AIRPLANES

AERONCA

Aeronca: 7CCM; Stuck Fuel Gauge; ATA 2842

An FAA safety inspector describes the following incident report. "This aircraft lost power and landed in a hayfield, *(ending)* up on its nose. The pilot stated he checked the fuel gauge prior to the flight and that it read '1/2.' He did not visually check the quantity. Investigation revealed the fuel tank to be empty and the gauge stuck in the '1/2' position." *(The fuel gauge part number provided: 2-731.)*

Part Total Time: unknown.

BEECH

Beech: A65; Split-Flap Condition; ATA 2752

(The Eastern Caribbean Civil Aviation Authority provided the following report for our FAA Service Difficulty Reporting System data base. One of their pilots wrote this defect's narrative, describing an inbound-flight to the island capitol city of Roseau in Dominica.)

"(This flight...) was under VFR conditions and the approach to landing was normal. After the landing rollout the flaps were retracted. When exiting the aircraft it was noticed that the inner flap on the port side was still down. The flap was manually reset to zero and *(later)* flown back *(to home base and a no-flap landing)*.

"The maintenance department found the L/H inboard flap drive assembly had failed. The two lugs that transfer cable movement 90 degrees into the actuator movement had sheared. The L/H inboard flap could be deployed from the 'up' to the 'down' position, but had to be reset to the 'up' position manually. The L/H outboard, R/H inboard and outboard flap drive assemblies, flap gearbox and motor, and flap drive cables were inspected and

found satisfactory. The drive assembly P/N 50-380113-1 was placed on order and the aircraft grounded *(waiting parts)*."

Part Total Time: unknown.

Beech: B100; Jammed Fuel Control Linkage; ATA 7620

This submitter states, "During a check ride, the chief pilot shut down the R/H engine in flight. When attempting a restart, the fuel cut-off lever jammed in the cut-off position. The crew conducted a successful and uneventful single engine landing at the base airport. Upon investigation, the technician discovered the aft shroud on the R/H starter generator *(P/N 23079-000-1)* had slipped aft, blocking the linkage while still in the cut-off (position). The shroud was repositioned and its clamp secured." *(Note: this starter generator part number returns 18 entries since 1993—but this report is unique for describing "blocked linkage." No separate part number was indicated for just the shroud.)*

Part Total Time: 322.0 hours.

BOEING

Boeing: 737-3G7; Incorrect Flap Series; ATA 5753

A technician from a repair station in England writes, "During routine maintenance it was noticed the L/H inboard aft flap appeared to be of the wrong type for this series aircraft. The internal parts catalog was consulted and this confirmed the (P/N 65-46434-139) aft flap assembly is not effective *(as in effectivity code)* for this aircraft. A survey was carried out on the other trailing edge flap assemblies—it was discovered the R/H, inboard aft flap was also not of the correct effectivity for this aircraft (P/N 65-46434-140). All of the other flap assemblies were found to be correct. We suspect these *(particular)* flap assemblies are for the 737-200 aircraft."

Part Total Time: unknown.

CESSNA

Cessna: 175; Cracked Engine Mount Attach Brackets; ATA 7120

(This report combines three submissions from the same mechanic on three different 175 aircraft.)

"The engine mount attachment bracket *(P/N 0513132-11)* was found broken and with cracks at the 12 and 6 o'clock position. The cracks were on the inboard and outboard sides of the AN960-616 washer(s)." "The possible cause *(for this defect)* is the AN960-6126 washer is too small. *(I believe)* a larger and thicker washer is needed to support the upper engine mount load."

(Since 1996, 21 reports have been entered into the FAA Service Difficulty Reporting System data base for this bracket's part number. Fourteen of these entries have included times ranging from 1,900 to 5,983 hours: 3,234.14 hours average.)

Part Total Time: unknown.

Cessna: 185E; Stripped Pitch-Trim Jack Screws; ATA 2742

An FAA field inspector states, "Maintenance personnel were advised by the pilot the horizontal stabilizer trim quit working. Inspection found the barrel side of the trim screw-jack had stripped out *(P/N 0712500-13)*. This system includes two trim screw-jacks: *(the remaining jack)* took all of the load and jammed up. Inspection of the second trim screw-jack barrel found the upper 1/3 of the threads were stripped in the trim screw barrel. Cessna does not specify any inspection criteria for wear of the jack screw threads or the barrel threads. *(I)* recommend either mandatory inspection criteria for the barrels and threads, or an Airworthiness Directive to preclude loss of *(aircraft)* control...."

(The FAA Service Difficulty Reporting System data base revealed four entries for this part number since 1995.)

Part Total Time: 8,672.0 hours.

Cessna: A185F; Cracked Horizontal Stabilizer Brackets; ATA 5340

A technician writes, "The aft attach points of this 185 Horizontal Stabilizer are structurally reinforced with an internal reinforcement triangle bracket (P/N's 0732106 and 0732106-1). Cracks in these reinforcements were found around the washers of the attach hardware, and in the radius of the angle. Identification of this problem can be accomplished by *(noting)* excessive fore and aft movement of the horizontal stabilizer while observing the rear attach fitting. If the fitting shows signs of a gap between the skin and the fitting while testing the movement fore and aft, this is probably a cause for further investigation of the internal reinforcement triangle brackets.

"This area is most easily inspected by removing the elevators and using adequate lighting and a small mirror through the lightening holes in the horizontal stabilizer. Probable cause *(might be)* fatigue and over torquing of the attach hardware. *(For prevention I recommend)* inspection of these reinforcements and/or their replacement."

Part Total Time: 8,460.2 hours.

Cessna: 208B; Plating Delamination of Landing Gear Pins; ATA 3211

A technician states, "These pins are life-limited to 31,500 landings, but we remove them at intervals for corrosion inspection of the landing gear interface. We have never found the pins themselves corroded, but the pins on newer aircraft or newer spare pins are plated (earlier ones were not) and *(this plating)* is prone to peeling off. I suspect the chrome is damaged during normal assembly and is discovered on the next disassembly." *(P/N listed as 2641008-2. The top numbers in the photograph are serial numbers.)*

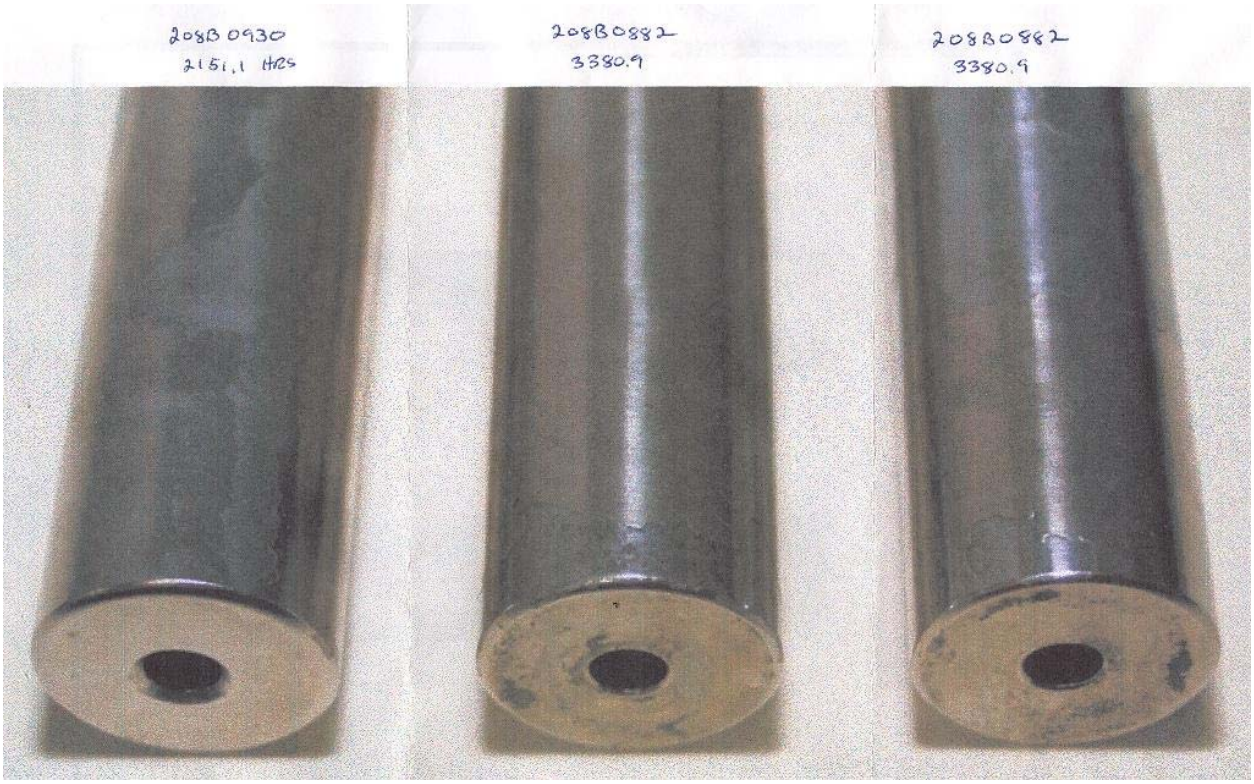

Part Total Time: 2,151.0 hours.

Cessna: 310Q; Failed Nose Gear Door Clevis Pin; ATA 5280

A mechanic for an air operator describes difficulty with his aircraft's nose landing gear door. "Either the cotter pin came out of the clevis pin (item #5) or the clevis pin failed—*(these items necessary to attach...)* the nose gear door push-pull tube to the eye bolt on the L/H nose gear door. On take-off the L/H door blew shut. When the gear was retracted the nose gear jammed half-way up, breaking the bell crank under the pilot's feet. The nose gear would not come down. Numerous high-G maneuvers were performed in an attempt to get the gear to drop *(but it remained stuck)*. The aircraft landed on its mains, the *(props)* were feathered, and the aircraft came to a stop—sliding on its nose for approximately 200 feet. The nose was lifted and *(its)* gear extended and locked. *(The aircraft)* was then towed to the hanger." *(Clevis pin P/N: MS20392-2011.)*

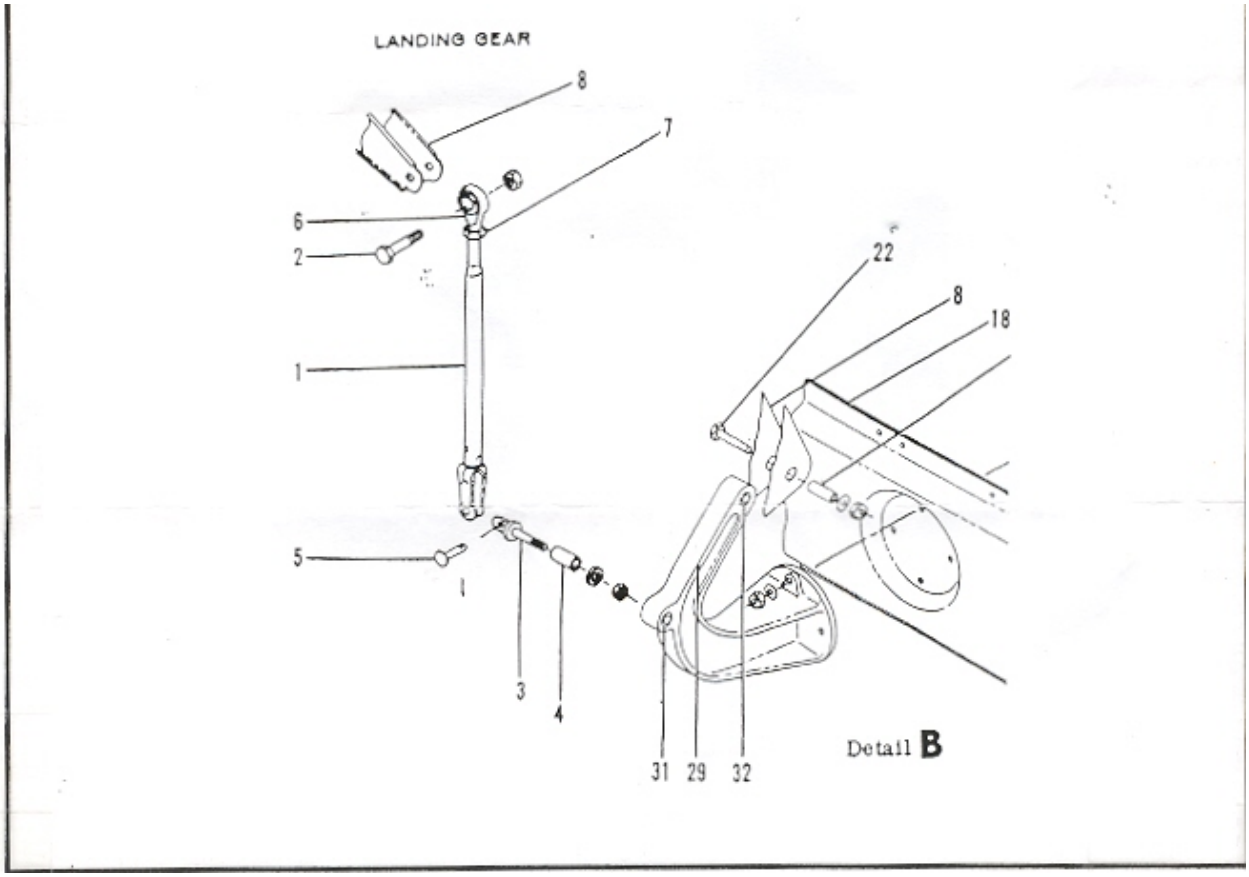

(The FAA Service Difficulty Reporting System data base revealed a Cessna 210G in 1998 having a similar problem—Ed.)

Part Total Time: 8,942.2 hours,

Cessna: 402C; Cracked Engine Nacelle Support Beam; ATA 5410

A mechanic says, "During compliance with AD 2005-12-13 (installation of Cessna Spar mod, kit SK402-47B) it was discovered the left nacelle outboard engine support beam channel (P/N 5654111-1) had a 1.75 inch crack running longitudinally on *(its)* inboard radius. (See the two drawings for the crack location.) The area of this crack is in a location where that portion of the channel is to be removed and the new channel installed per SK402-47B."

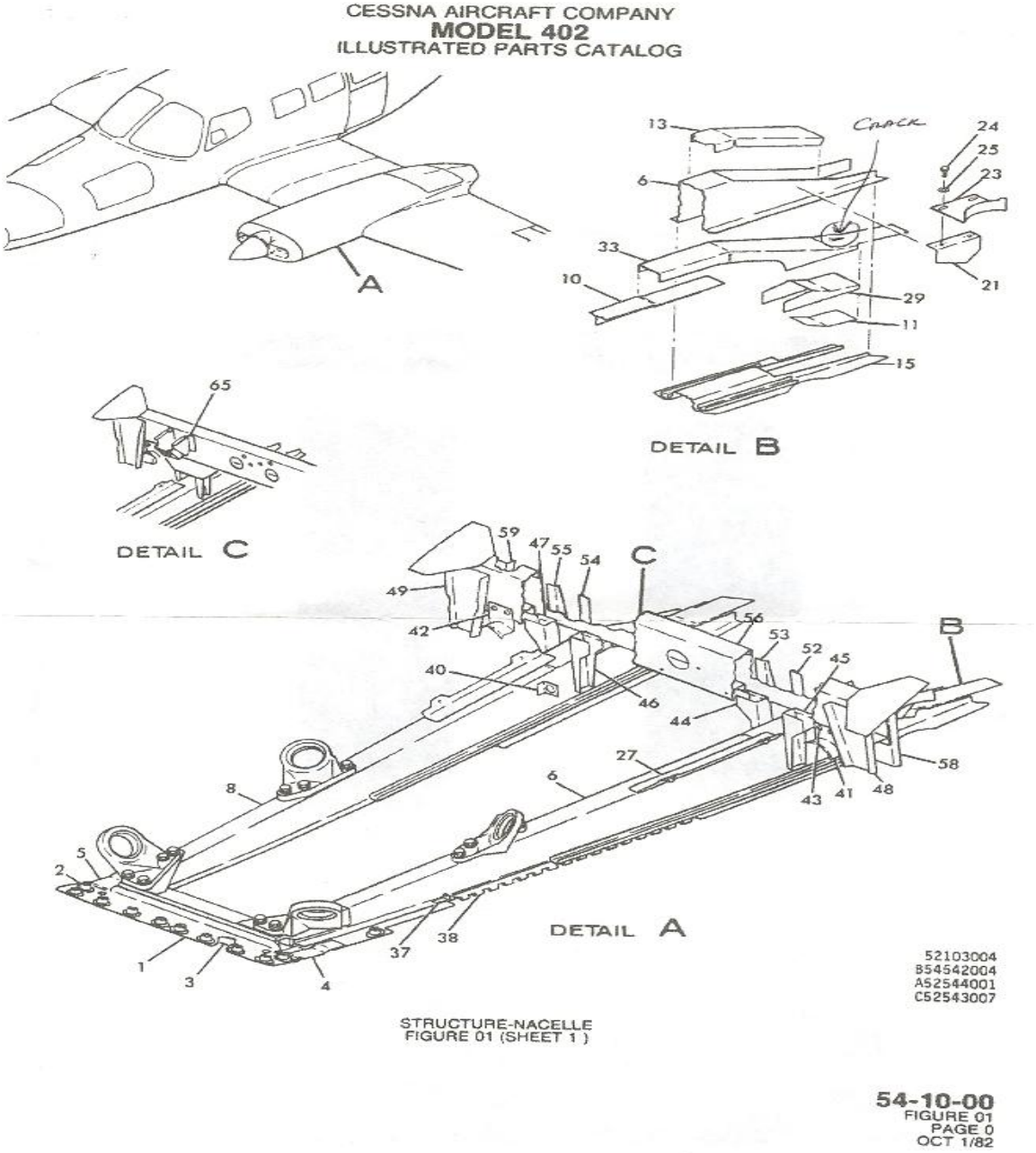
CESSNA AIRCRAFT COMPANY
MODEL 402
ILLUSTRATED PARTS CATALOG
A
CRACK
DETAIL B
DETAIL C
DETAIL A
52103004
B54542004
A52544001
C52543007
STRUCTURE-NACELLE
FIGURE 01 (SHEET 1)
54-10-00
FIGURE 01
PAGE 0
OCT 1/82

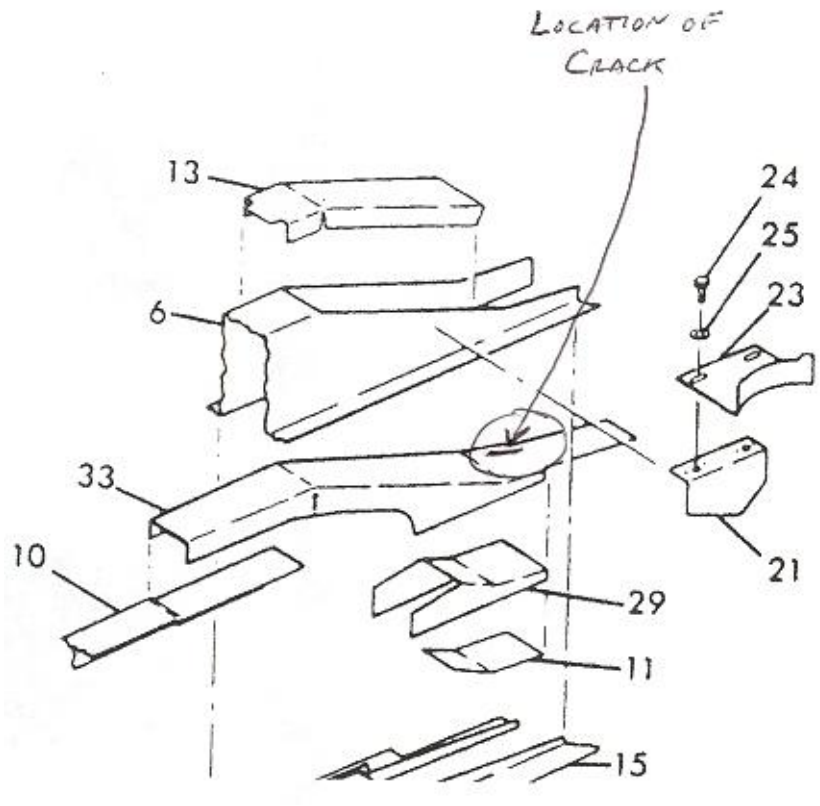

The FAA Service Difficulty Reporting System data base revealed another 402 with a "wrinkled" mount—same part number—in 1999.)

Part Total Time: 15,951.4 hours.

AIR NOTES

INTERNET SERVICE DIFFICULTY REPORTING (iSDR) WEB SITE

The Federal Aviation Administration (FAA) Internet Service Difficulty Reporting (iSDR) web site is the front-end for the Service Difficulty Reporting System (SDRS) data base that is maintained by the Aviation Data Systems Branch, AFS-620, in Oklahoma City, Oklahoma. The iSDR web site supports the Flight Standards Service (AFS), Service Difficulty Program by providing the aviation community with a voluntary and electronic means to conveniently submit in-service reports of failures, malfunctions, or defects on aeronautical products. The objective of the Service Difficulty Program is to achieve prompt correction of conditions adversely affecting continued airworthiness of aeronautical products. To accomplish this, Malfunction or Defect Reports (M or Ds) or Service Difficulty Reports (SDRs) as they are commonly called, are collected, converted into a common SDR format, stored, and made available to the appropriate segments of the FAA, the aviation community, and the general public for review and analysis. SDR data is accessible through the "Query SDR data" feature on the iSDR web site at: http://av-info.faa.gov/sdrx/.

In the past, the last two pages of the Alerts contained a paper copy of FAA Form 8010-4, Malfunction or Defect Report. To meet the requirements of *Section 508, this form will no longer be published in the Alerts; however, the form is available on the Internet at: http://forms.faa.gov/forms/faa8010-4.pdf. You can still download and complete the form as you have in the past.

*Section 508 was enacted to eliminate barriers in information technology, to make available new opportunities for people with disabilities, and to encourage development of technologies that will help achieve these goals.

A report should be filed whenever a system, component, or part of an aircraft, powerplant, propeller, or appliance fails to function in a normal or usual manner. In addition, if a system, component, or part of an aircraft, powerplant, propeller, or appliance has a flaw or imperfection, which impairs or may impair its future function, it is considered defective and should be reported under the Service Difficulty Program.

The collection, collation, analysis of data, and the rapid dissemination of mechanical discrepancies, alerts, and trend information to the appropriate segments of the FAA and the aviation community provides an effective and economical method of ensuring future aviation safety.

The FAA analyzes SDR data for safety implications and reviews the data to identify possible trends that may not be apparent regionally or to individual operators. As a result, the FAA may disseminate safety information to a particular section of the aviation community. The FAA also may adopt new regulations or issue airworthiness directives (ADs) to address a specific problem.

The iSDR web site provides an electronic means for the general aviation community to voluntarily submit reports, and may serve as an alternative means for operators and air agencies to comply with the reporting requirements of 14 Title of the Code of Federal Regulations (CFR) Section 121.703, 125.409, 135.415, and 145.221, if accepted by their certificate-holding district office. FAA Aviation Safety Inspectors may also report service difficulty information when they conduct routine aircraft maintenance surveillance as well as accident and incident investigations.

The SDRS data base contains records dating back to 1974. At the current time, we are receiving approximately 40,000 records per year. Reports may be submitted to the iSDR web site on active data entry form or submitted hardcopy to the address below.

The SDRS and iSDR web site point of contact is:

Tom Marcotte
Service Difficulty Reporting System, Program Manager
Aviation Data Systems Branch, AFS-620
P.O. Box 25082
Oklahoma City, OK 73125
Telephone: (405) 954-6500
SDRS Program Manager e-mail address: 9-AMC-SDR-ProgMgr@faa.gov

IF YOU WANT TO CONTACT US

We welcome your comments, suggestions, and questions. You may use any of the following means of communication to submit reports concerning aviation-related occurrences.

Editor: Daniel Roller (405) 954-3646
FAX: (405) 954-4570 or (405) 954-4655

E-mail address: Daniel.Roller@faa.gov

Mailing address: FAA, **ATTN: AFS-620 ALERTS**, P.O. Box 25082, Oklahoma City, OK 73125-5029

You can access current and back issues of this publication from the internet at: http://av-info.faa.gov/. Select the General Aviation Airworthiness Alerts heading.

AVIATION SERVICE DIFFICULTY REPORTS

The following are abbreviated reports processed for the previous month, which have been entered into the FAA Service Difficulty Reporting (SDR) System data base. This is not an all-inclusive listing of Service Difficulty Reports. For more information, contact the FAA, Regulatory Support Division, Aviation Data Systems Branch, AFS-620, located in Oklahoma City, Oklahoma. The mailing address is:

FAA
Aviation Data Systems Branch, AFS-620
PO Box 25082
Oklahoma City, OK 73125

To retrieve the complete report, click on the Control Number located in each report. These reports contain raw data that has not been edited. Also, because these reports contain raw data, the pages containing the raw data are not numbered.

If you require further detail please contact AFS-620 at the address above.

Federal Aviation Administration

Service Difficulty Report Data

Sorted by aircraft make and model then engine make and model. This report derives from unverified information submitted by the aviation community without FAA review for accuracy.

Control Number	Aircraft Make	Engine Make	Component Make	Part Name	Part Condition
Difficulty Date	**Aircraft Model**	**Engine Model**	**Component Model**	**Part Number**	**Part Location**
2007FA0000472				BOWL	DAMAGED
5/10/2007				105018	CARBURETOR

RECEIVED CARBURETOR FROM CUSTOMER WITH THE REQUEST (PLEASE INSPECT UNIT FOR PROPER OPERATION, AIRCRAFT ON GROUND. HAVE BEEN BOMBARDED WITH SERIOUS PROBLEMS TO JUST ABOUT EVERY CARBURETOR WE HAVE) PILOT STATED THAT HE ALMOST CRASHED HELICOPTER DUE TO LACK OF ENGINE RESPONSIVENESS AFTER ROLLING THROTTLE IN AFTER TEST AUTO ROTATION. INSPECTION OF CARBURETOR REVEALED VENT PORTS IN BOWL AND THROTTLE BODY WERE NOT IN THE NORMAL POSITION NOR THE NORMAL SIDE FOR THIS CARBURETOR MODEL. COULD NOT POSITIVELY IDENTIFY THE IDLE TUBE AND NOZZLE AS OEM PARTS. THE ACCELERATOR PUMP DISCHARGE CHECK VALVE DID NOT FUNCTION IN THE MANNER NORMALLY SEEN BY THIS REPAIR STATION. THROTTLE BODY HAS ECONOMIZER JET INSTALLED WHICH IS NOT USED ON THIS MODEL CARBURETOR. (K)

CA070321003	BARREL	CRACKED
3/20/2007	S8462	PROPELLER

(CAN) LOWER BARREL HALF FOUND WITH 5.5 INCH CRACK AT FLANGE AREA. (TC NR 20070321003)

CA070322009	TAPE	DAMAGED
3/14/2007		PROPELLER

(CAN) DURING VISUAL INSPECTION, IT WAS FOUND THAT THE TAPE USED ON THE LEADING EDGE OF THIS PROP WHICH WAS INSTALLED BY THE MFG, UNDER SPEC SP-127, WAS STARTING TO BLISTER AND SEPARATE FROM THE LEADING EDGE, WORSE AT THE TIPS. TAPE WAS REMOVED AND LOG ENTRIES CARRIED OUT. NO WEIGHT AND BALANCE CHANGES AND THOUGH DISCUSSIONS WITH BOTH MFGS. THERE IS NO ILL EFFECT ON BALANCE AS LONG AS BOTH BLADE TAPES ON BOTH BLADES ARE REMOVED. COULD NOT SEEM TO ENTER THAT THIS IS A W69EK-63 MODEL PROP. (TC NR 20070322009)

2007FA0000401	HOUSING	CRACKED
5/21/2007	31699042	UNKNOWN

CRACK IN PART ID.

2007FA0000493	CAPACITOR	NONE
5/30/2007	M3984	MAGNETO

IN READING AN ALERT FROM APRIL 2007 REFERING TO SLICK MAGNETO CAPACITOR FAILURE PART NR M-3984 STATES THAT OIL/DIELECTRIC FLUID LEAKED FROM THE CAPACITOR. THAT IS A DRY CAPACITOR AND CONTAINS NO FLUID. I HAVE CUT OPEN SEVERAL FOR TRAINING AIDS AND NO LIQUID EXSISTS IN THAT PART.

2007FA0000444	ENGINE	MALFUNCTIONED
4/21/2007	12501	

AIRCRAFT ECU WARNING LIGHT COME ON FREQUENTLY. WE SPOKE WITH THIELERT ABOUT THE PROBLEM AND THEY SAY THAT DURING STEEP BANKS OR YAW THE FUEL PRESSURE CAN BE DIFFERENT BETWEEN THE RAILS ON EACH ENGINE. THE ECU CAN INTERPRET THIS AS A PROBLEM AND TURN ON THE ANNUNCIATOR. THIS IS MOSTLY A NUISANCE BECAUSE EVERYTIME THE AN ANNUNCIATOR TURNS ON WE MUST BRING THE AIRCRAFT TO A MECHANIC WHO MUST CLEAR THE PROBLEM FORM THE COMMPUTER. WHILE THE ANNUNCIATOR IS ON WE

HAVE NO WAY OF KNOWING IF A REAL PROBLEM DEVELOPS BECAUSE THE ANNUCIATOR IS STILL ON. IN ADDITION AS A FLIGHT SCHOOL IT COSTS US SIGNIFICANT AMOUNTS OF LOST REVENUE EVERY TIME THAT WE MUST TAKE THE AIRPLANE OFF-LINE UNTIL OUR MECHANICE CAN INSPECT IT. ONE TIME WHILE THE RIGHT ENGINE WAS OFF DURING A TRAINING FLIGHT THE LEFT ENGINE BEGAN TO IN POWER. WE IMMEDIATELY RE-STARTED THE RIGHT ENGINE AND THE LEFT ENGINE BEHAVED AFTER THAT. ALL FOR ECU WARNING LIGHT ILLUMINATED AFTER THAT. OUR MECHANIC HAS SINCE CHECKED THE AIRCRAFT AND ALL ECUS AND ENGINES ARE OPERATING AS THEY SHOULD. THE AIRCRAFT HAS FLOWN OVER TEN HOURS SINCE THEN WITHOUT INCIDENT.

2007FA0000489		CAPACITOR	FAILED
5/30/2007			MAGNETO

IN READING AN ALERT FROM APRIL 2007 REFERRING TO SLICK MAGNETO CAPACITOR FAILURE PN M-3984 STATES THAT OIL/DIELECTRIC FLUID LEAKED FROM THE CAPACITOR. THAT IS A DRY CAPACITOR AND CONTAINS NO FLUID. HAVE CUT OPEN SEVERAL FOR TRAINING AIDS AND NO LIQUID EXISTS IN THAT PART.

CA070514049	ALLSN	GOVERNOR	MALFUNCTIONED
5/7/2007	501D13D	6506715	RT PROPELLER

(CAN) WHILE ON CLIMB OUT, AFTER THE CREW MADE A ROUTINE SELECTION OF PROP SYNC, THE RT PROP/ ENGINE BEGAN TO CYCLE UNCONTROLLABLY. THE CREW SHUT IT DOWN AND RETURNED TO STATION. MAINTENANCE REPLACED THE RT PROP GOVERNOR AND THE A/C RETURNED TO SERVICE. (TC NR 20070514049)

A101913	ALLSN	ALLSN	GEAR	FRACTURED
6/12/2007	T63A720	T63A720	23038229	GEARBOX ASSY

ENGINE WAS SENT FOR REPAIR DUE TO GENERATING METAL. UPON DISASSEMBLY FOUND THAT THE SHAFT ON THE FORWARD SIDE OF THE CENTRIFUGAL BREATHER GEAR WAS FRACTURED IN THE AREA OF THE RADIUS WHERE THE SHAFT JOINS THE GEAR. THE RELATIVE MOTION BETWEEN THE SHAFT AND THE GEAR WAS THE CAUSE OF METAL GENERATION.

A1019131	ALLSN	ALLSN	GEAR SHAFT	FRACTURED
6/12/2007	T63A720	T63A720	23038229	GEARBOX ASSY

ENGINE WAS SENT FOR REPAIR DUE TO GENERATING METAL. UPON DISASSEMBLY FOUND THAT THE SHAFT ON THE FORWARD SIDE OF THE CENTRIFUGAL BREATHER GEAR WAS FRACTURED IN THE AREA OF THE RADIUS WHERE THE SHAFT JOINS THE GEAR. THE RELATIVE MOTION BETWEEN THE SHAFT AND THE GEAR WAS THE CAUSE OF METAL GENERATION.

2007FA0000490	CONT	CRANKSHAFT	CRACKED
5/25/2007	IO240B	IO240A	ENGINE

CRANKSHAFT HAD A VERY LARGE, DEEP FORGING LAP ON THE NR 3 CRANK CHEEK. AN EFFORT WAS MADE TO REMOVE THE LAP BY LOCALIZED GRINDING BUT THE IT WAS TOO DEEP TO REMOVE. CRANKSHAFT WAS DETERMINED UNAIRWORTHY BY ENGINEERING.

2007FA0000496	CONT	STUD	CHAFED
5/30/2007	TSIO520*		ENGINE CASE

DURING BUILD UP OF A NEW ENGINE FOR INSTALLATION, IT IS ROUTINE FOR US TO R&R THE OIL COOLER TO INSTALL THE GASKET WITH SEALANT AND TO INSPECT THE ADAPTER PLATE MOUNTING STUD HEIGHT. ON THIS PARTICULAR ENGINE, ALL OF THE STUDS WERE INSTALLED TOO HIGH, SO THAT THEY PROTRUDED ABOVE THE GASKET MOUNTING SURFACE. TWO OF THEM HAD MADE IMPRESSIONS IN THE COOLER SEALING SURFACE.

2007FA0000478	LYC	CYLINDER	ERODED
5/10/2007	IO540*	LW12987	ENGINE

AFTER REMOVAL OF THE CYLINDER BARREL FROM THE CYLINDER HEAD, SEVER ERROSION WAS NOTED JUST ABOVE THE SEAL BAND AREA. IF THE BARREL HAD NOT BEEN REMOVED, THIS ERROSION WOULD HAVE BEEN UNDETECTED AND WOULD HAVE CAUSED A HEAD AND BARREL SEPERATION.

CA070502012	LYC	WHEEL	CRACKED

4/24/2007	IO540E1B5	9546	NLG

(CAN) AXLE PLUG 9546 WHICH IS USED TO SECURE AXLE IN NOSE WHEEL SEPARATED ALLOWING AXLE BOLT TO COME HALF WAY OUT OF AXLE WHICH THE PILOT NOTICED ON WALK AROUND. ON INSPECTION IT WAS NOTICED THAT WHEEL HALF RETAINING BOLTS/NUTS HAD LOOSENED CAUSING WHEEL HALVES TO SEPARATE, PUTTING ADDED FORCE ON PLUG 9546 WHICH IN TURN SHEARED PLUG CAUSING BOLT TO EXIT AXLE PART WAY. (TC NR 20070502012)

2007FA0000464	LYC	BOLT	SHORT
4/30/2007	O360*		PROPELLER

INSPECTING PROPELLER DURING ANNUAL, FOUND PROPELLER BOLTS 0.25 IN SHORT OF BACK SIDE OF FLANGE INSERTS. ALL BOLT THREAD ENGAGEMENT WAS FORWARD OF INSERT BOSS. AFT .2500 INC OF INSERT, MATERIAL BEHIND CRANK FLANGE, HAD NO THREAD ENGAGEMENT. WRONG BOLTS INSTALLED, CORRECTED BY INSTALLING PROP BOLT KIT (PN 76EM8) WHICH PROVIDED (2) THREADS THROUGH INSERT WHEN TROQUED. (K)

IG0R200743667	PWA	ALIDSG	BEARING	FAILED
5/9/2007	PT6*	DPF2	2523973	FCU

ALLIED SIGNAL AEROSPACE (HONEYWELL) FUEL CONTROL UNIT (FCU)P/N 4138008-3, S/N C75067 RECEIVED FOR OVERHAUL AT INTERNATIONAL GOVERNOR SERVICES (IGS) CRS IG0R976N EXPERIENCED A SPOOL BEARING (P/N 2523973) FAILURE. THE FCU WAS REMOVED FROM PT6A ENGINE S/N PCE-PH0218. CONTROL APPEARS TO BE FIRST RUN OVERHAUL, HOWEVER, WE ARE UNABLE TO OBTAIN TIME SINCE NEW. IGS WILL FORWARD THE BEARING TO HONEYWELL FOR REVIEW. NOTE: THIS IS THE 5TH OR 6TH BEARING WE HAVE SEEN FAIL IN THE PAST 6 MONTHS OR SO.

IG0R200746139	PWA	HONEYWELL	HOUSING	CORRODED
5/18/2007	PT6*	DPF2	2523629	FUEL CONTROL

CORROSION ON FLOW BODY METERING VALVE OPERATING LEVER COVER, EXCEEDS LIMITS.

IG0R200743437	PWA	ALIDSG	BELLOWS	FAILED
5/8/2007	PT6A135	DPF2	2526385	FUEL CONTROL

THE FUEL CONTROL (FCU) P/N 3244777-4-3-2, S/N A59386 DIRECTED THE ENGINE TO MIN FLOW SHORTLY AFTER LANDING WITHOUT ANY FURTHER POWER LEVER RESPONSE. THE CONTROL TSO IS 92.8. THIS CONTROL WAS LAST SERVICED BY INTERNATIONAL GOVERNOR SERVICES (IGS) IN NOV 2006. THE AS RECEIVED TEST REVEALED FUEL FLOWS HAD DROPPED BELOW SCHEDULE AT ALL TEST POINTS EXCLUDING MIN FLOW AND MAX FLOW (THESE ARE BOTH PHYSICAL HARD STOPS). FURTHER INVESTIGATION REVEALED THAT THE EVACUATED SECTION OF THE BELLOWS (HONEYWELL P/N 2526385) WAS BREACHED (LOST THE VACUUM). THE INSPECTION CRITERIA FOR THE EVACUATED SECTION OF THE BELLOWS INVOLVES MEASURING THE BELLOWS HEIGHT AND COMPARING THE READING WITH THAT RECORDED DURING ORIGINAL MANUFACTURE. THE BELLOWS WILL LENGTHEN UPON BREACH OF THE EVACUATED SECTION. AFTER APPLICATION OF A CORRECTION FACTOR FOR AMBIENT PRESSURE; THE BELLOWS MUST BE WITHIN .008" OF THE ORIGINAL HEIGHT. THE INSCRIBED HEIGHT ON P/N 2526385 S/N 7077 AT MANUFACTURE IS 1.030". ACTUAL HEIGHT RECORDED BY IGS IS 1.082" (.050” FROM ORIGINAL). HEIGHT AS RECORDED DURING LAST OVERHAUL WAS FOUND TO BE WITHIN .003". THE BELLOWS SHOW NO INDICATION OF PHYSICAL DAMAGE AND THE ROOT CAUSE OF THE BREACH IS UNDETERMINED. THE FAILURE OF THE FUEL CONTROL IS CONFIRMED, HOWEVER, THE ROOT CAUSE IS DETERMINED TO NOT BE ATTRIBUTABLE TO IGS ACTIONS. IGS WILL FORWARD THE BELLOWS TO HONEYWELL ENGINEERING FOR EVALUATION.

CA070514037	PWA	ENGINE	NOISY
3/21/2007	PT6A65AR		

(CAN) THE ENGINE EMITTED A NOISE ON TAKEOFF ROLL ACCOMPANIED BY AN UNCOMMANDED REDUCTION IN POWER. TAKEOFF WAS ABORTED. MFG WILL MONITOR INVESTIGATION OF THE EVENT AND WILL ADVISE OF ROOT CAUSE ONCE ESTABLISHED. (TC NR 20070514037)

CA070514054	PWA	AUTOFEATHER SYS	MALFUNCTIONED
4/20/2007	PW123		ENGINE

(CAN) DURING WATER SCOOPING, THE ENGINE PROPELLER AUTO-FEATHERED. THE ENGINE TORQUE SENSOR AND ELECTRICAL HARNESS WERE SUBSEQUENTLY REMOVED FOR INVESTIGATION. MFG WILL ADVISE OF ROOT CAUSE ONCE DETERMINED. (TC NR 20070514054)

CA070524005		PWC	LINK ASSY	BROKEN
5/19/2007		PW150A	82740162001	RT AILERON

(CAN) WHEN DOING WP8 INSPECTION TASK 000-057-640-500 GVI OF THE (RT) AILERON ASSY. MAINTENANCE FOUND LINK ASSY P/N 82740162-001 FROM THE RT AILERON LVDT BROKEN. (TC NR 20070524005)

CA070315006		ROTAX	BOWL	DISTORTED
10/18/2006		ROTAX914	963178	CARBURETOR

(CAN) CARB FLOAT BOWL NUT WAS OVERTORQUED DURING A PREV MAINTENANCE EVENT. THIS DISTORTED THE FLOAT BOWL AND CAUSED THE FLOAT PINS TO BEND OUTWARDS. THIS CAUSED THE FLOATS TO CONTACT THE SIDE OF THE BOWL DURING OPERATION. OPERATOR NOTED INTERMITTENT ROUGH RUNNING THAT WAS ELIMINATED AFTER FLOAT BOWL WAS REPLACED. MM CONTAINS A CONVERSION ERROR THAT INCORRECTLY LISTS THE TORQUE FOR THIS NUT IN FOOT POUND INSTEAD OF INCH POUNDS. THE METRIC TORQUE LISTED IS CORRECT. THIS MM IS CURRENTY BEING REVISED. (TC NR 20070315006)

CA070323001		RROYCE	COMBUST CHAMBER	FAILED
3/1/2007		DART5342	RK47289	ENGINE

(CAN) PILOTS NOTICED THE LT ENGINE OPERATING APPROX. 100 POUNDS OF TORQUE LOW. UPON LANDING MAINTENANCE WAS NOTIFIED. IT WAS FOUND THAT THE NR 2 COMBUSTION CAN ASSEMBLY HAD LOST A SECTION OF ITS OUTSIDE AIR CASING. A GENERAL INSPECTION OF THE AREA GAVE NO CLUES AS TO WHY THIS HAPPENED. IAW THE MM ALL APPLICABLE INSPECTIONS WERE COMPLETED TO ENSURE THE ENGINE WOULD BE SAFE TO CONTINUE IN SERVICE. FURTHERMORE, DUE TO A HOT SECTION INSPECTION COMING DUE ALL OTHER COMBUSTION CANS WERE REPLACED. THE AIRCRAFT WAS RETURNED TO SERVICE WITH NO ISSUES SINCE. (TC NR 20070323001)

CA070518001	AEROSP	ALLSN	LEVER	BROKEN
5/14/2007	AS355F2	250C20R	355A57217007	RT THROTTLE

(CAN) PART BROKE IN (2) PIECES JUST ABOVE ATTACHMENT POINT DURING ENGINE PRE-START CHECK PROCEDURES. (TC NR 20070518001)

CA070524002	AEROSP	PWA	GCU	FAILED
5/22/2007	ATR42300	PW120	243211	NR 1

(CAN) DURING DEPARTURE THE NR 1 AC WILD SYSTEM WENT OFF LINE. WHEN THE CREW ATTEMPTED A RESET THE (BLUE) HYDRAULIC SYSTEM WENT OFF LINE. THE AIRCRAFT RETURNED TO POINT OF DEPARTURE AND CARRIED OUT A NORMAL LANDING. MAINTENANCE REPLACED THE NR 1 AC WILD GCU. AFTER WHICH THE AIRCRAFT WAS RETURNED TO SERVICE. (TC NR 20070524002)

CA070315003	AEROSP	PWA	CONNECTOR	UNSECURE
3/10/2007	ATR42300	PW120		MLG

(CAN) DEPARTING, THE CREW OBSERVED A FAIL TO RETRACT INDICATION ON THE RT MAIN LANDING GEAR. THE AIRCRAFT RETURNED TO POINT OF DEPARTURE AND LANDED WITHOUT FURTHER PROBLEM. MAINTENANCE FOUND A CONNECTOR IN THE INDICATION SIGNAL HARNESS WITH A CONNECTOR NOT FULLY LOCKED. THE CONNECTOR WAS SECURED SYSTEM INTEGRITY VERIFIED AND THE AIRCRAFT RETURNED TO SERVICE. (TC NR 20070315003)

CA070315004	AEROSP	PWA	HSI	MALFUNCTIONED
3/12/2007	ATR42300	PW120	7004544713	NR 1

(CAN) DEPARTING THE CREW OBSERVED A CIRCUIT BREAKER TRIP ON THE NR 1 EADI, RESET SUCCESSFUL. THIS WAS FOLLOWED BY A CIRCUIT BREAKER TRIP ON THE NR 1 EHSI. THE RESET ATTEMPT FAILED AND THE AIRCRAFT RETURNED TO POINT OF DEPARTURE WITHOUT FURTHER PROBLEM. MAINTENANCE REPLACED THE

NR 1 SYMBOL GENERATOR UNIT. THE SYSTEM FUNCTION CHECKED SATISFACTORY AND THE AIRCRAFT WAS RETURNED TO SERVICE. (TC NR 20070315004)

CA070315001	AEROSP	PWA	HEATER	FAILED
3/6/2007	ATR42300	PW120		CCAS PROBE

(CAN) DEPARTING, THE CREW OBSERVED A STICK PUSHER/ STICK SHAKER FAULT. AFTER A FAILED, RESET THE AIRCRAFT, RETURNED TO POINT OF DEPARTURE WITH OUT FURTHER PROBLEM. MAINTENANCE VERIFIED THE NR 1 CCAS ALPHA PROBE HEAT FUNCTION HAD FAILED. THE PROBE WAS REPLACED AND THE AIRCRAFT RETURNED TO SERVICE (TC NR 20070315001)

CA070314013	AEROSP	PWA	BLADES	DAMAGED
2/13/2007	ATR42300	PW120		POWER TURBINE

(CAN) DURING CLIMB, THE ENGINE EMITTED A LOUD NOISE ACCOMPANIED BY AN UNCOMMANDED REDUCTION IN POWER. THE ENGINE WAS SHUTDOWN IN FLIGHT. GROUND INSPECTION REVEALED A SEIZED PROPELLER AND DAMAGED POWER TURBINE BLADES. MFG WILL INVESTIGATE THE EVENT AND ADVISE OF ROOT CAUSE ONCE ESTABLISHED. (TC 20070314013)

CA070426008	AEROSP	PWA	PROBE	MALFUNCTIONED
4/19/2007	ATR42300	PW120	45150560	AOA

(CAN) WHILE TAXIING TO POSITION FOR DEPARTURE THE CREW OBSERVED AN ICE DETECTOR FAULT. THE AIRCRAFT RETURNED TO THE RAMP FOR TROUBLESHOOTING. MAINTENANCE REPLACED THE CAPTAINS ALPHA PROBE AND THE AIRCRAFT WAS RETURNED TO SERVICE. (TC NR 20070426008)

CA070514056	AEROSP	PWA	ENGINE	FLAMED OUT
4/20/2007	ATR42300	PW121	PW121	

(CAN) THE ENGINE FLAMED OUT IN CRUISE. MFG WILL INVESTIGATE THE EVENT AND ADVISE OF ROOT CAUSE ONCE ESTABLISHED. (TC NR 20070514056)

CA070328001	AEROSP	PWA	COMPUTER	MALFUNCTIONED
3/25/2007	ATR42320	PW121	350A230083	STALL WARNING

(CAN) FOLLOWING DEPARTURE, THE CREW OBSERVED A STICK PUSHER/ STICK SHAKER FAULT. THE AIRCRAFT RETURNED TO POINT OF DEPARTURE AND LANDED WITHOUT FURTHER PROBLEM. MAINTENANCE REPLACED THE CREW ALERTING COMPUTER, SYSTEM GROUND CHECKED AND THE AIRCRAFT RETURNED TO SERVICE. (TC NR 20070328001)

CA070507012	AEROSP	PWA	SHUTOFF VALVE	MALFUNCTIONED
5/3/2007	ATR42320	PW121		BLEED AIR SYS

(CAN) DEPARTING THE CREW OBSERVED THAT THE ARCRAFT WAS FAILING TO PRESSURIZE NORMALLY. THE AIRCRAFT RETURNED TO POINT OF DEPARTURE AND LANDED WITHOUT FURTHER DIFFICULTY. MAINTENANCE REPLACED THE NR 1 BLEED AIR SHUTOFF VALVE AND THE AIRCRAFT WAS RETURNED TO SERVICE. (TC NR 20070507012)

CA070530004	AEROSP	PWA	PWA	SEAL	LEAKING
5/28/2007	ATR42320	PW121	PW121	36022375	NR 1 ENGINE

(CAN) WHILE CONDUCTING AN ACCEPTANCE CHECK FLIGHT, THE CREW OBSERVED A LOW OIL PRESSURE CONDITION ON THE NR 1 ENGINE. THE CREW CONDUCTED A PRECAUTIONARY SHUTDOWN OF THE ENGINE AND RETURNED TO POINT OF DEPARTURE AND LANDED WITHOUT FURTHER PROBLEM. MAINTENANCE DETERMINED THE NR 1 STARTER GENERATOR DRIVE SEAL WAS LEAKING. THE SEAL WAS REPLACED AND THE AIRCRAFT RETURNED TO SERVICE AFTER SATISFACTORY GROUND RUN. (TC NR 20070530004)

CA070314007	AEROSP	PWA	RELIEF VALVE	UNSERVICEABLE
1/30/2007	ATR42500	PW127	310595801	ENGINE OIL

(CAN) DURING CLIMB THE ENGINE LOW OIL PRESSURE WARNING ACTIVATED AND THE ENGINE WAS SHUTDOWN IN FLIGHT. SUBSEQUENT INSPECTION LED TO REPLACEMENT OF THE ENGINE COLD-OIL PRESSURE RELIEF

VALVE. (TC NR 20070314007)

CA070314015	AEROSP	PWA	TURBINE BLADES	DAMAGED
2/10/2007	ATR72	PW124B		ENGINE

(CAN) THE ENGINE FLAMED OUT OUT FOLLOWING TAKEOFF. SUBSEQUENT INSPECTION REVEALED DAMAGED POWER TURBINE BLADES AND METAL DEBRIS IN THE ENGINE OIL SYSTEM. MFG WILL INVESTIGATE THE EVENT AND ADVISE OF ROOT CAUSE ONCE ESTABLISHED. (TC NR 20070314015)

CA070514026	AEROSP	PWA	PACKING	LEAKING
2/27/2007	ATR72	PW124B	ST3367009	FUEL MANIFOLD

(CAN) THE ENGINE FLAMED OUT ON APPROACH. SUBSEQUENT INSPECTION REVEALED LEAKING FUEL NOZZLE MANIFOLD PACKINGS. (TC NR 20070514026)

CA070514032	AEROSP	PWA	TURBINE BLADES	DAMAGED
3/23/2007	ATR72	PW127		ENGINE

(CAN) THE ENGINE EXPEREINCED AN UNCOMMANDED POWER REDUCTION IN CLIMB, ACCOMPANIED BY NOISE AND FLAMES EXITING THE EXHAUST. THE ENGINE WAS SHUT DOWN IN FLIGHT. SUBSEQUENT INSPECTION REVEALED FRACTURED HIGH POWER TURBINE BLADES. MFG WILL INVESTIGATE THE EVENT AND ADVISE OF ROOT CAUSE ONCE ESTABLISHED. (TC NR 20070514032)

CA070514045	AEROSP	PWA	TURBINE BLADES	FRACTURED
4/9/2007	ATR72	PW127		ENGINE

(CAN) SHORTLY AFTER TAKEOFF THE ENGINE EXHIBITED TORQUE FLUCTUATIONS AND THE AIRCRAFT DIVERTED TO POINT OF DEPARTURE. SUBSEQUENT INSPECTION REVEALED FRACTURED POWER TURBINE BLADES. (TC NR 20070514045)

CA070514061	AEROSP	PWA	ENGINE	MALFUNCTIONED
4/23/2007	ATR72	PW127		

(CAN) AT TOP OF CLIMB, ENGINE TORQUE REDUCED UNCOMMANDED ACCOMPANIED BY A POWER TURBINE OVER-SPEED CONDITION. THE ENGINE WAS SHUTDOWN IN FLIGHT. MFG WILL MONITOR INVESTIGATION OF THE EVENT AND ADVISE OF ROOT CAUSE ONCE ESTABLISHED. (TC NR 20070514061)

CA070514008	AEROSP	PWA	FUEL CONTROL	MALFUNCTIONED
3/7/2007	ATR72	PW127	32448716	ENGINE

(CAN) TAKEOFF WAS ABORTED DUE TO HIGH TURBINE TEMPERATURE INDICATIONS. THE FUEL CONTROL UNIT WAS SUBSEQUENTLY REPLACED. (TC NR 20070514008)

CA070514015	AEROSP	PWA	AUTOFEATHER SYS	UNSERVICEABLE
3/3/2007	ATR72	PW127		

(CAN) ON APPROACH, THE ENGINE EXPERIENCED UNCOMMANDED TORQUE REDUCTIONS ACCOMPANIED BY FEATHERING OF THE PROPELLER. THE ENGINE WAS SHUTDOWN IN FLIGHT. THE ENGINE AUTO-FEATHER UNIT WAS SUBSEQUENTLY REPLACED. (TC NR 20070514015)

CA070314004	AEROSP	PWA	FUEL CONTROL	UNSERVICEABLE
1/25/2007	ATR72	PW127	311717804	

(CAN) ON APPROACH, ENGINE TORQUE FELL TO ZERO WHEN POWER LEVER WAS RETARDED. SUBSQUENT THROTTLE INPUT RESULTED IN TORQUE FLUCTUATION AND THE ENGINE WAS SUBSEQUENTLY SHUTDOWN IN FLIGHT. TROUBLESHOOTING LED TO REPLACEMENT OF THE ENGINE FUEL CONTROL UNIT. (TC NR 20070314004)

CA070514011	AEROSP	PWA	PACKING	LEAKING
3/8/2007	ATR72202	PW124B	ST3367009	FUEL NOZZLES

(CAN) THE ENGINE EXPERIENCED AN UNCOMMANDED POWER REDUCTION IN CLIMB AND WAS SHUTDOWN IN

FLIGHT. SUBSEQUENT INSPECTION REVEALED A FUEL LEAK RESULTING FROM DAMAGED FUEL NOZZLE PACKINGS. (TC NR 20070514011)

CA070514007	AEROSP	PWA	BLEED VALVE	MALFUNCTIONED
3/6/2007	ATR72212	PW127		ENGINE

(CAN) TAKEOFF WAS ABORTED DUE TO HIGH TURBINE TEMPERATURE INDICATION. THE INTERCOMPRESSOR BLEED VALVE WAS SUBSEQUENTLY REPLACED. (TC NR 20070514007)

CA070514043	AEROSP	PWA	PACKING	LEAKING
4/4/2007	ATR72212	PW127	ST3367009	FUEL NOZZLE

(CAN) DURING BOARDING, FUEL WAS DISCOVERED LEAKING FROM THE ENGINE. SUBSEQUENT INSPECTION REVEALED DAMAGED FUEL NOZZLE TRANSFER TUBE PACKINGS. (TC NR 20070514043)

CA070514039	AEROSP	PWA	PACKING	LEAKING
3/30/2007	ATR72212	PW127	ST3367009	FUEL MANIFOLD

(CAN) THE ENGINE FLAMED OUT ON APPROACH. SUBSEQUENT INSPECTION REVEALED DAMAGED FUEL NOZZLE MANIFOLD O-RING PACKINGS. (TC NR 20070514039)

CA070514023	AEROSP	PWA	PACKING	LEAKING
3/20/2007	ATR72212	PW127	ST3367009	FUEL MANIFOLD

(CAN) THE ENGINE EXHIBITED AN UNCOMMANDED POWER REDUCTION IN CRUISE AND WAS SHUTDOWN IN FLIGHT. SUBSEQUENT INSPECTION REVEALED LEAKING FUEL MANIFOLD PACKINGS. (TC NR 20070514023)

2007FA0000473	AGUSTA	ALLSN	BLADE	CRACKED
5/11/2007	A109	250C20B	1090103019	MAIN ROTOR

SKIN CRACKS WERE DISCOVERED IN THIS BLADE UPON INVESTIGATION OF AN UNUSUALLY HIGH VIBRATION LEVEL AS REPORTED BY THE PILOT. THE ONE-PER-REV VERTICAL VIBRATION WAS ESPECIALLY NOTICEABLE DURING THE LANDING PHASE OF FLIGHT. INSPECTION OF THIS BLADE REVEALED CORD-WISE CRACKS IN THE TOP AND BOTTOM SKINS WHICH EXTEND FROM THE TRAILING EDGE AT STA 3135 TO THE AFT EDGE OF THE SPAR AT STA 3123. THE CRACKS THEN EXTEND SPAN-WISE FROM STA 2940 TO STA 3225. THE CRACK IN THE LOWER SKIN BISECTS A SKIN REPAIR AT STA 3130, APPROXIMATELY 2 INCHES FORWARD OF THE TRAILING EDGE. THIS REPAIR WAS ACCOMPLISHED WITH AD 2000-15-20 AND BT 109-111 UNDER WO NR 8-080132-84, DATED 4/24/2006. BT 109-50, PART I REQUIRES DAILY VISUAL INSPECTION OF BLADES WITH GREATER THAN 500 HOURS OF OPERATION BETWEEN STATIONS 1550 AND 3100 (123 MM IB OF THE OBSERVED CRACKS). BT 109-50, PART II REQUIRES INSPECTION OF THIS AREA WITH A 3X MAGNIFYING GLASS EVERY 25 HOURS. NO DISCREPANCIES WERE NOTED DURING THESE PRIOR TO THE REPORT OF UNUSUAL VIBRATION. (K)

CA070514019	AGUSTA	PWA	ENGINE	LOW PRESSURE
3/19/2007	A119	PT6*		

(CAN) ENGINE OIL PRESSURE WAS SEEN TO INCREASE AND THE ENGINE WAS SHUTDOWN IN FLIGHT. MFG WILL INVESTIGATE THE EVENT AND ADVISE OF ROOT CAUE ONCE ESTABLISHED. (TC NR 20070514019)

CA070314020	AGUSTA	PWA	TURBINE BLADES	FRACTURED
1/22/2007	A119	PT6T3		ENGINE

(CAN) ON LANDING FOLLOWING A TRAINING FLIGHT, THE ENGINE EMITTED A LOUD NOISE. SUBSEQUENT INSPECTION REVEALED FRACTURED POWER TURBINE BLADES. MFG WILL INVESTIGATE THE EVENT AND ADVISE OF ROOT CAUSE ONCE ESTABLISHED. (TC NR 20070314020)

CA070514006	AGUSTA	PWA	FMU	UNSERVICEABLE
3/3/2007	AB139	PT6*	304867607	

(CAN) ENGINE POWER REDUCED UNCOMMANDED IN CRUISE AND THE ENGINE WAS SHUTDOWN IN FLIGHT. THE FUEL MANAGEMENT MODULE (FMM) WAS SUBSEQUENTLY REPLACED. (TC NR 20070514006)

CA070313003	AIRBUS	GE	POWER SUPPLY	OVERHEATED

3/12/2007	A310300	CF680C2*	8ES00375200	CABIN LIGHTS

(CAN) DURING CRUISE, FLIGHT CREW OBSERVED WHAT APPEARED TO BE WHITE SMOKE EMANATING FROM READING LIGHT (PSU) PANEL ASSEMBLY ABOVE SEAT 30 AB. CREW SWITCHED OFF READING LIGHTS AND SMOKE STOPPED. ON ARRIVAL TO THE STATION, MAINTENANCE FOUND ONE TRANSFORMER PRINTED CIRCUIT BORD SEVERELY OVERHEATED. POWER SUPPLY REPLACED AND SYSTEM TESTED SERVICEABLE. (TC NR 20070313003)

CA070424003	AIRBUS	GE	UNKNOWN	UNKNOWN
4/12/2007	A310304	CF680C2*		FUEL SYSTEM

(CAN) DURING CRUISE, CREW NOTICES A FUEL DISCREPANCY OF ONE TON BETWEEN FUEL ON BOARD AND FUEL USED. AFTER RECALCULATION SHORTLY THEREAFTER THE FUEL DISCREPANCY HAD GROWN TO 1.4 TONS. CREW PROCEEDED WITH QRH PROCEDURES AND SPOTTED FUEL SPAYING FROM THE RIGHT WING TIP VENT BOX. SHORTLY THEREAFTER THE FUEL VENTING CEASED. THE FLIGHT WAS DIVERTED TO THE MAIN STATION. DURING INVESTIGATION MAINTENANCE ATTEMPTED TO DUPLICATE THE PROBLEM WITH NO SUCCESS. AIRBUS WAS CONTACTED FOR THEIR RECOMMENDATION. THE FOLLOWING UNITS WERE REPLACED AND ROUTE TO THE VENDOR FOR SHOP CHECK AND STRIP REPORT: (A) RT INNER TANK VENT FLOAT VALVE (B) 2 RT OB BOOST PUMP CHECK VALVES (C) RT WING REFUEL/DEFUEL VALVE (D) FUEL TRANSFER VALVE ACTUATOR INTEGRITY OF THE RT SIDE INNER AND OUTER TANK PLUMBING WAS CHECKED AND FOUND NORMAL. AIRCRAFT WAS RETURN TO SERVICE WITH NO FURTHER PROBLEM. (TC NR 20070424003)

CA070424001	AIRBUS	GE	PTU	LEAKING
4/20/2007	A310304	CF680C2*	571191	HYD SYSTEM

(CAN) DURING FLIGHT, CREW NOTICED LOSS OF GREEN SYSTEM HYDRAULIC FLUID. FLIGHT DIVERTED TO MAIN MAINTENANCE BASE FOR INVESTIGATION. DURING INVESTIGATION, THE GREEN/YELLOW SYSTEM PTU WAS FOUND LEAKING AT THE CHECK VALVE DUE TO A DAMAGED O RING. PTU UNIT WAS REPLACED AND SYSTEM TESTS SERVICEABLE. (TC NR 20070424001)

CA070424002	AIRBUS	GE	FAN	ODOR
4/21/2007	A310304	CF680C2*	X76451	CABIN

(CAN) DURING FLIGHT CABIN CREW REPORTED ELECTRICAL BURN ODOR FROM THE AFT CABIN. FAULT ISOLATED TO THE AFT RT FAN HEATER FIN NR 28HC. CB'S WERE PULLED AND ODOR DISAPPEARED. SYSTEM WAS PLACED ON MEL DUE PART IS NIL STOCK. (TC NR 20070424002)

CA070528001	AIRBUS	CFMINT	CFMINT	TURBINE	MALFUNCTIONED
5/21/2007	A319112	CFM565A3	71200011		ENGINE

(CAN) WAITING FOR SHOP TEAR DOWN, SUSPECTED FAILURE CAUSES BUT NOT CONFRIMED ARE NR 4 BEARING OR HPT BLADE. ENG TT 26462, CYC 12034, TSI 13977, CSI 6250. (TC NR 20070528001)

CA070528004	AIRBUS	CFMINT	TIRE	DEFLATED
3/7/2007	A319114	CFM565A3		NLG

(CAN) ON APPROACH AT 5000 FT CREW HEARD LOUD BANG, AIRCRAFT LANDED WITHOUT INCIDENT, FLIGHT CREW SUSPECTED A BIRD STRIKE. AT ARRIVAL GATE MAINTENANCE FOUND LT NOSE WHEEL TIRE DEFLATED AND OFF THE RIM. BOTH NOSE WHEEL ASSEMBLIES REPLACED, SHOP FOUND THAT THE LT NOSE WHEEL ASSEMBLY OVER INFLATION VALVE HAD BLOWN. NO EVIDENCE OF A BIRD STRIKE WAS FOUND. (TC NR 20070528004)

CA070531004	AIRBUS	RROYCE	UNKNOWN	ODOR
5/30/2007	A330243	RB211*		CABIN

(CAN) DURING FLIGHT, A PAPER BURNING SMELL AT SEAT 26DE WAS REPORTED TO THE CABIN CREW. THE AUDIO SYSTEM WAS SHUTOFF IAW PRECAUTION AND SMELL DISAPPEARED AFTER 20 MINUTES. THE AUDIO SYSTEM WAS TESTED ON ARRIVAL AND THE AREA INSPECTED FOR BURNING MARKS. AUDIO SYSTEM AND AREA WAS FOUND NORMAL WITH NO DEFECT. AIRCRAFT WAS RETURN TO SERVICE WITH NO REPEAT. (TC NR 20070531004)

CA070528008	AIRBUS	CFMINT	CFMINT	SENSOR	INOPERATIVE

4/13/2007	A340313	CFM565C4	CFM565C4	RP22100	OIL SYSTEM

(CAN) NR 2 ENGINE OIL TEMPERATURE HIGH, 30 MILES FROM AIRPORT, ENGINE SHUTDOWN IAW QRH PROCEDURES, AIRCRAFT LANDED WITHOUT INCIDENT. ENGINE OIL TEMP SENSOR AND FUEL RETURN VALVE REPLACED, NO SUBSEQUENT FAULTS AFTER PARTS CHANGED. (TC NR 20070528008)

CA070514051	AIRTRC	PWA	ENGINE	FLAMED OUT
4/18/2007	AT802	PT6A67A	PT6A67A	

(CAN) THE ENGINE FLAMED OUT IN FLIGHT. MFG WILL INVESTIGATE THE EVENT AND ADVISE OF ROOT CAUSE ONCE ESTABLISHED. (TC NR 20070514051)

CA070313008	AIRTRC	PWA	FITTING	CHAFED
3/13/2007	AT802	PT6A67A	3024606	ENGINE

(CAN) UPON INSPECTION OF THE P3 AIR LINES, IT WAS DISCOVERED THAT THERE WAS NO CLEARANCE BETWEEN THE P3 FILTER HOUSING NIPPLE FITTING (P/N 3024606) AND THE ENGINE REAR FIRE SEAL PLATES (P/N 3031003 AND 3031004). UPON REPOSITIONING OF THE FIRE SEAL PLATES, IT WAS DISCOVERED THAT THE PLATES HAD CHAFED INTO THE NIPPLE FITTING APPROXIMATELY 0.020 INCH. THE FITTING WAS REMOVED AND REPLACED. THE OTHER AIRCRAFT IN OUR FLEET WERE INSPECTED WITH NO OTHER DEFECTS NOTED. (TC NR 20070313008)

EBVR200700000	AMD	AMD	MOTOR	FAILED
6/9/2007	FALCON10		12342	BRAKE UNIT

FAILED NORMAL MOTOR TRAVEL TIME CHECKS. SUSPECT NORMAL MOTOR BRAKE WAS PREVIOUSLY ASSEMBLED INCORRECTLY CAUSING DAMAGE TO MOTOR.

2007FA0000465	AMD	GARRTT	PITOT LINE	LOOSE
5/9/2007	FALCON10	TFE731*		NR 2

WHILE TROUBLESHOOTING A LEAK IN NR 2 STATIC SYSTEM, THE RT SIDE STATIC PLATE HAD TO BE TAKEN LOOSE. UPON REMOVAL OF THE PLATE, SILICONE RTV WAS FOUND ON THE FITTING FOR THE NR 1 STATIC SYSTE. WHEN THE FITTING WAS LOOSENED, FOUND A LAGRE AOUNT OF TEFLON PIPE TAPE WRAPPED AROUND THE NIPPLE OF THE STATIC PLATE, AND THE FLARE OF THE ALUMINUM HARD LINE GOING TO THE STATIC PLATE WAS BROKEN OFF AND LAYING LOOSE IN THE ASSY. A TECH IN THE PAST HAD POSSIBLY EXPERIENCED A LEAK ON THIS SYSEM, AND LOADED THE NIPPLE WITH TEFLON TAPE AND RTV TTO GET THE SYSTEM TO SEAL, INSTAD OF REPAIRING THE HARD LINE. THESE LINES SHOULD BE REPAIRED IAW STANDARD PRACTICE TO PREVENT PREMATURE FAILURE. (K)

CA070314005	AMD	GARRTT	ENGINE	VIBRATION
2/17/2007	FALCON10	TFE7312	FE73121C	NR 1

(CAN) NR1 ENGINE FAILED, TEMPERATURE SPIKE ABOVE 1000 DEGREES C. AS VIBRATION INCREASED, THEN INDICATIONS (ITT, FIFY N2) DECREASED. N1 TURNED, SECURITY, PULLED FIRE HANDLE. ON ARRIVAL, COULD NOT TURN N1, FOUND OIL AND METAL PIECES IN EXHAUST, ENGINE REMOVED FROM AIRCRAFT. PRIOR OIL ANALYSIS WERE NORMAL (16 DEC.2006 AND 21 SEPT, 2005). NO METAL ON MAG PLUG. A FEW SLIVERS IN FILTER. (TC NR 20070314005)

CA070327002	AMD	HNYWL	DRAIN VALVE	DAMAGED
3/22/2007	FALCON2000	AS90711A	6BS10011	POTABLE WATER

(CAN) THE AIRCRAFT POTABLE WATER SYSTEM WAS DAMAGED DUE TO HAVING THE WATER SYSTEM FULL OF WATER. THEN HAVING THE AIRCRAFT LEFT ON THE RAMP FOR 8 HOURS AT -14C WITH NO ADDITIONAL HEAT TO KEEP THE WATER SYSTEM FROM FREEZING. UPON ARRIVAL THE PILOTS REPORTED (WATER APPEARS TO BE LEAKING FROM THE BELLY). THE MAINTENANCE PERSONNEL INVESIGATED THE SNAG AND FOUND THE WATER SYSTEM DRAIN VALVE WAS DAMAGED DUE TO THE SEVERE FREEZING. A REMINDER TO ALL CORPORATE PILOTS TO MONITOR THE POTABLE WATER SYSTEM AND THE OAT IN WINTER. (TC NR 20070327002)

2007FA0000475	AMD	GARRTT	HOUSING	MISMANUFACTURED
4/30/2007	FALCON900	TFE731*	4311935	SEAT ROLLER

(8) SEATS, MODEL 5004 (SINGLE) WERE PURCHASED. THE SEATS HAVE (3 FT) ON EACH CORNER (12 TOTAL) THAT ARE TO FIT INTO THE SEAT RAIL. SAID PURCHASED SEATS DID NOT FIT INTO THE EXISTING MFG SEAT RAIL. MFG WAS CONTACTED. IT WAS DETERMINED BY THE MFG THAT THE (3 FEET) BY THE MFG THAT THE (3 FEET) ON EACH CORNER (12 TOTAL) WERE BEING MFG INCORRECTLY. THE SEATS ARE DESIGNED TO FIT INTO (2 TRACKS). THE FRONT 3 AND BACK 3 FEET ON THE LT SIDE OF THE CHAIR ARE PART OF A (ROLLER HOUSING). EACH CHAIR HAS (2) ROLLER HOUSINGS. MFG IS PROVIDING 16 REPLACEMENT ROLLER HOUSINGS (PN 431193-5). (K)

2007FA0000458	AMD	GARRTT	FUEL CONTROL	FAULTY
5/2/2007	FALCON900B	TFE7315BR	307080026	ENGINE

PILOTS REPORTED THAT ENGINE THAT THIS FUEL CONTROL UNIT WAS INSTALLED ON COULD NOT BE CONTROLLED BY NORMAL COMPUTER MODE, AND THAT WHEN THEY WENT TO MANUAL MODE THAT THEY COULD NOT CONTROL ENGINE SPEED FUNCTIONS EITHER. IT SEEMS THAT THIS FUEL CONTROL HAS SOME INTERNAL FAULT. REPLACEMENT FUEL CONTROL RESOLVED THIS PROBLEM. (K)

110DJ0507	AMTR		SKIN	CRACKED
5/15/2007	ECLIPSE500			RT ELEVATOR

DURING REMOVAL OF THE ELEVATORS, A SMALL CRACK WAS DISCOVERED ON RT ELEVATOR SKIN BY OB MOST HINGE BRACKET ATTACH POINT.

CA070514022	AYRES	PWA	TUBE	FRACTURED
2/22/2007	S2RHGT65	PT6A41		ENGINE

(CAN) DURING SPRAYING OPERATIONS, THE ENGINE LOST POWER RESULTING IN A FORCED LANDING. SUBSEQUENT INSPECTION REVEALED A FRACTURED FUEL CONTROL P3 DELIVERY LINE. (TC NR 20070514022)

CA070314022	AYRES	PWA	ENGINE	FLAMED OUT
2/22/2007	S2RHGT65	PT6A65AG		

(CAN) THE ENGINE WAS REPORTED TO HAVE FLAMED OUT IN FLIGHT. MFG WILL INVESTIGATE THE EVENT AND ADVISE OF ROOT CAUSE ONCE DETERMINED. (TC NR 20070314022)

CA070525003	BAG	GARRTT	BOLT	SHEARED
5/24/2007	JETSTM3101	TPE33110U	A1029E	NLG

(CAN) NLG RETRACTION JACK MOUNT UPPER IB MOUNTING BOLT SHEARED. DISCOVERED DURING SCHEDULED NLG RETRACTION, JACK ATTACH BOLT INTEGRITY INSPECTION. ALL MOUNTING BOLTS REPLACED WITH NEW. (TC NR 20070525003)

CA070502015	BAG	GARRTT	EXHAUST PIPE	BROKEN
4/30/2007	JETSTM3212	TPE33112UHR	1379049H401	ENGINE

(CAN) ON CLIMB PILOTS EXPERIENCED TORQUE FLUCTUATIONS ON RT ENGINE. THEY RETURNED TO THE AIRPORT WITH NO FURTHER PROBLEMS. ON TAXI THEY BLEW THE FIRE BOTTLES ON THE RT ENGINE. WHEN MAINTENANCE REMOVED THE COWLS THEY DISCOVERED HEAT DAMAGE TO SOME WIRING. ON FURTHER INVESTIGATION THEY DISCOVERED THAT THE EXHAUST PIPE STUB HAD BROKEN AND FOLDED OVER PARTIALLY BLOCKING THE EXHAUST GAS FLOW. FURTHER INVESTIGATION IS REQUIRED. (TC NR 20070502015)

2007FA0000417	BBAVIA	LYC	SPAR	DELAMINATED
5/11/2007	11AC	O235*		LT WING

DELAMINATION OCCURRING AT LT FRONT WING SPAR / STRUT LOCATION. CRACK AT BOTTOM EDGE, AT WING ROOT FITTING. POSSIBLE AGE OF SPAR CAUSING DELAMINATION. LONGITUDINAL CRACK AT WING ROOT POSSIBLE EARLIER DAMAGE. REPLACED WITH NEW WOOD SPAR P/N 5146L.

2007FA0000463	BBAVIA	LYC	SPAR	CRACKED
5/14/2007	11BC	O235*		LT WING

DELAMINATION OCCURRING AT WING STRUT ATTACH LOCATION. CRACK AT BOTTOM EDGE AT ROOT FITTING. POSSIBLE AGE OF SPAR CAUSING DELAMINATION. LONGITUDINAL CRACK AT WING ROOT POSSIBLE EARLIER

DAMAGE REPLACE WITH NEW WOOD SPAR (PN 5146L). (K)

2007FA0000471	BBAVIA	LYC	LOCK NUT	STRIPPED
4/4/2007	7ECA	O290*	12984	MLG LEG

LOCK NUT THREADS FAILED, MLG STRUT EXTENDED ON TAKEOFF ALLOWING MLG TO SWING FREE. DURING LANDING, MLG WAS UNDER FUSELAGE CAUSING DAMAGE TO LOWER LONGERONS, CONDITION OF THREADS CANNOT BE DETERMINED WITHOUT DISASSEMBLING THE MLG STRUT ASSY. THEREFORE, THE THREADS MAY DETERIORATE SIGNIFICANTLY WITHOUT DETECTION. SUGGEST SPECIAL EMPHASIS INSPECTION ROUTINE AT (5) YEAR INTERVALS TO INCLUDE DISASSEMBLY OF MLG STRUT ASSY. (K)

CA070320006	BBAVIA	LYC	CONTROL CABLE	FRAYED
2/26/2007	8GCBC	O360C2E	19023	LT WING TE DLAP

(CAN) FLAP CABLE FOUND FRAYED AT ALLUMINUM PULLEY IN LT WING GAP AREA. (TC NR 20070320006)

CA070320008	BBAVIA	LYC	CONTROL CABLE	FRAYED
2/26/2007	8GCBC	O360C2E	19023	RT WING TE FLAP

(CAN) FLAP CABLE FOUND FRAYED AT ALLUMINUM PULLEY IN RT WING GAP AREA. (TC NR 20070320008)

CA070514052	BEECH	PWA	ENGINE	SURGES
4/13/2007	100BEECH	PT6A28	PT6A28	

(CAN) THE ENGINE SURGED DURING CLIMB ACCOMPANIED BY AN INCREASE IN INTERTURBINE TEMPERATURE. MFG WILL INVESTIGATE THE EVENT AND WILL ADVISE OF ROOT CAUSE ONCE ESTABLISHED. (TC NR 20070514052)

CA070522005	BEECH	PWA	PWC	TURBINE WHEEL	UNKNOWN
5/21/2007	1900C	PT6A65B	PT6A65B		ENGINE

(CAN) ECTM TREND INDICATED ENGINE ITT WAS INCREASING WITH TIME. ENGINE SPLIT. CT WHEEL NOTED AS CONTACTING THE GUIDE VANE ASSY. ENGINE TO BE SENT TO MFG TO INVESTIGATE. (TC NR 20070522005)

CA070314002	BEECH	PWA	ENGINE	MAKING METAL
1/17/2007	1900D	PT6*		

(CAN) ON CLIMB FOLLOWING TAKE-OFF, FLAMES WERE SEEN EXITING THE ENGINE EXHAUST ACCOMPANIED BY A LOUD NOISE. THE ENGINE WAS SHUTDOWN IN FLIGHT. SUBSEQUENT INSPECTION REVEALED METAL DEBRIS IN THE ENGINE OIL AND ROTOR SEIZURE. MFG WILL INVESTIGATE THE EVENT AND ADVISE OF ROOT CAUSE ONCE ESTABLISHED. (TC NR 20070314002)

2007FA0000467	BEECH	PWA	SKIN	DAMAGED
3/16/2007	1900D	PT6A6		VERTICAL STAB

VERTICAL STABILIZER LEADING EDGE SKIN ATTACH RIVETS WORKING. FOUND THAT THE ORIGINAL UNIVERSAL HEAD RIVETS WERE REPLACED WITH FLUSH RIVETS. THE SKIN WAS COUNTERSUNK TO ACCOMMODATE THE RIVETS, HOWEVER THE SKIN WAS TOO THIN TO COUNTERSINK AND EVENTUALLY WORKED LOOSE. SKIN WAS REPAIRED IAW DER ENGINEERING REPORT AND CORRECT RIVETS INSTALLED. STRICT ADHERENCE TO PUBLISHED DATA WOULD HAVE PREVENTED DAMAGE. (K)

CA070314014	BEECH	PWA	COMPRESSOR	SEIZED
2/2/2007	1900D	PT6A67D		ENGINE

(CAN) FLAMES WERE SEEN EXITING THE ENGINE EXHAUST AND THE ENGINE WAS SHUT DOWN IN FLIGHT. SUBSEQUENT INSPECTION REVEALED COMPRESSOR SEIZURE. MFG WILL INVESTIGATE THE EVENT AND ADVISE OF ROOT CAUSE ONCE ESTABLISHED. (TC NR 20070314014)

CA070322005	BEECH	PWA	GOVERNOR	MALFUNCTIONED
3/13/2007	1900D	PT6A67D	8210410	PROPELLER

(CAN) AIRCRAFT DEPARTED FOR DESTINATION, WHEN THE CREW ATTEMPTED TO SET CLIMB POWER, THE RT

PROP DROPPED TO 1200 RPM AND THE TORQUE WENT TO 2200 LBS. THE CREW DECLARED AN EMERGENCY AND LANDED UNEVENTLY . MAINTENANCE WENT TO SITE THE FOLLOWING DAY AND CHANGED THE RT PROPELLER, RIGGED IT AND PERFORMED GROUND RUNS .THE AIRCRAFT WAS RETURNED TO SERVICE WITH NO FURTHER PROBLEMS. (TC NR 20070322005)

CA070514020	BEECH	PWA	BEARING	DAMAGED
2/2/2007	1900D	PT6A67D		NR 2

(CAN) THE ENGINE EXHIBITED FLAMES FROM THE EXHAUST IN FLIGHT. SUBSEQUENT INSPECTION REVEALED A DAMAGED (NR 2) BEARING. MFG WILL INVESTIGATE THE EVENT AND ADVISE OF ROOT CAUSE ONCE ESTABLISHED. (TC NR 20070514020)

CA070514042	BEECH	PWA	ENGINE	MALFUNCTIONED
4/3/2007	1900D	PT6A67D		

(CAN) ENGINE TORQUE FLUCTUATED IN FLIGHT ACCOMPANIED BY HIGH INTER-TURBINE TEMPERATURE AND LOW OIL PRESSURE. THE ENGINE WAS SHUTDOWN IN FLIGHT. SUBSEQUENT INSPECTION FOUND THE POWER SECTION SEIZED AND THE EXHAUST DUCTS DENTED. MFG WILL MONITOR THE INVESTIGATION OF THE EVENT AND ADVISE OF ROOT CAUSE ONCE ESTABLISHED. (TC NR 20070514042)

CA070514053	BEECH	PWA	TURBINE BLADES	FRACTURED
4/18/2007	1900D	PT6A67D		ENGINE

(CAN) ON ADVANCING POWER FOR TAKEOFF, THE ENGINE EMITTED A NOISE AND LOST POWER. SUBSEQUENT INSPECTION REVEALED FRACTURED POWER TURBINE BLADES. MFG WILL INVESTIGATE THE EVENT AND ADVISE OF ROOT CAUSE ONCE DETERMINED. (TC NR 20070514053)

CA070504009	BEECH	PWA	COMPUTER	MALFUNCTIONED
5/3/2007	200BEECH	PT6A41		FLT DIRECTOR

(CAN) FLIGHT DIRECTOR CB TRIPPED AND WILL NOT RESET. (TC NR 20070504009)

CA070327001	BEECH	PWA	BOOT	ARCED
3/26/2007	200BEECH	PT6A41		DE ICE SYSTEM

(CAN) PILOTS REPORTED THAT THE IB LEADING EDGE DEICE BOOT WAS NOT FUNCTIONING. THE DEICE SYSTEM WAS TESTED AND THE SNAG WAS CONFIRMED. WHEN THE LEADING EDGE WAS REMOVED TO CHECK THE BOOT SYSTEM EVIDENCE OF SEVERE ARCING WAS FOUND IN THE VICINITY OF THE START RELAYS. IT IS SUSPECTED THAT THE DEICE HOSE WAS ROUTED IMPROPERLY TO THE LEADING EDGE. OVER TIME THE HOSE CHAFED ON THE WIRING FROM THE RELAYS. MAINTENANCE REPLACED THE LEADING EDGE AS WELL AS ANY CONNECTORS THAT WERE DAMAGED. (TC NR 20070327001)

2007FA0000438	BEECH	PWA	EXHAUST DUCT	CRACKED
4/5/2005	200BEECH	PT6A41	02R3022406	ENGINE

WHILE PREFORMING SCHEDULED MAINTENANCE,REMOVED EXHAUST STACKS TO FACILTATE INSPECTING THE EXHAUST DUCT.A CRACK WAS FOUND IN THE SKI SLOPE.THE EXHAUST HAD NOT HED SB 3380 COMPLIED WITH.POWER SECTION WAS REMOVED FOR REPAIR.

2007FA0000431	BEECH	PWA	EXHAUST DUCT	CRACKED
5/18/2005	200BEECH	PT6A41	02R3022406	ENGINE

WHILE PREFORMING SCHEDULED MAINTENANCE,REMOVED EXHAUST STACKS TO FACILTATE INSPECTING THE EXHAUST DUCT.A CRACK WAS FOUND IN THE SKI SLOPE.THE EXHAUST DUCT SB 3380 HAD NOT BEEN COMPLIED WITH.POWER SECTION WAS REMOVED FOR REPAIR.

2007FA0000432	BEECH	PWA	EXHAUST DUCT	CRACKED
7/5/2006	200BEECH	PT6A41	02R3022406	ENGINE

WHILE PREFORMING SCHEDULED MAINTENANCE,REMOVED EXHAUST STACKS TO FACILTATE INSPECTING THE EXHAUST DUCT.A CRACK WAS FOUND IN THE SKI SLOPE.THE EXHAUST DUCT SB 3380 HAD BEEN COMPLIED WITH 515.2 HOURS PRIOR.POWER SECTION WAS REMOVED FOR REPAIR.

2007FA0000419	BEECH	PWA	EXHAUST DUCT	CRACKED
4/10/2007	200BEECH	PT6A41	02R3022406	ENGINE

WHILE PREFORMING SCHEDULED MAINTENANCE,REMOVED EXHAUST STACKS TO FACILTATE INSPECTING THE EXHAUST DUCT.A CRACK WAS FOUND IN THE SKI SLOPE.THE EXHAUST DUCT SB 3380 HAD BEEN COMPLIED WITH 365 HOURS PRIOR.POWER SECTION WAS REMOVED FOR REPAIR.

2007FA0000440	BEECH	PWA	EXHAUST DUCT	CRACKED
5/14/2003	200BEECH	PT6A41	02R3022406	ENGINE

WHILE PREFORMING SCHEDULED MAINTENANCE,REMOVED EXHAUST STACKS TO FACILTATE INSPECTING THE EXHAUST DUCT.A CRACK WAS FOUND IN THE SKI SLOPE.POWER SECTION WAS REMOVED FOR REPAIR.

2007FA0000421	BEECH	PWA	EXHAUST DUCT	CRACKED
2/5/2004	200BEECH	PT6A41	02R3022406	ENGINE

WHILE PREFORMING SCHEDULED MAINTENANCE,REMOVED EXHAUST STACKS TO FACILTATE INSPECTING THE EXHAUST DUCT.A CRACK WAS FOUND IN THE SKI SLOPE.POWER SECTION WAS REMOVED FOR REPAIR.

2007FA0000422	BEECH	PWA	EXHAUST DUCT	CRACKED
5/1/2005	200BEECH	PT6A41	02R3022406	ENGINE

WHILE PREFORMING SCHEDULED MAINTENANCE,REMOVED EXHAUST STACKS TO FACILTATE INSPECTING THE EXHAUST DUCT.A CRACK WAS FOUND IN THE SKI SLOPE.POWER SECTION WAS REMOVED FOR REPAIR.

2007FA0000423	BEECH	PWA	EXHAUST DUCT	CRACKED
9/17/2005	200BEECH	PT6A41	02R3022406	ENGINE

WHILE PREFORMING SCHEDULED MAINTENANCE,REMOVED EXHAUST STACKS TO FACILTATE INSPECTING THE EXHAUST DUCT.A CRACK WAS FOUND IN THE SKI SLOPE.POWER SECTION WAS REMOVED FOR REPAIR.

2007FA0000424	BEECH	PWA	EXHAUST DUCT	CRACKED
8/20/2006	200BEECH	PT6A41	02R3022406	ENGINE

WHILE PREFORMING SCHEDULED MAINTENANCE,REMOVED EXHAUST STACKS TO FACILTATE INSPECTING THE EXHAUST DUCT.A CRACK WAS FOUND IN THE SKI SLOPE.POWER SECTION WAS REMOVED FOR REPAIR.

2007FA0000441	BEECH	PWA	EXHAUST DUCT	CRACKED
9/8/2006	200BEECH	PT6A41	02R3022406	ENGINE

WHILE PREFORMING SCHEDULED MAINTENANCE,REMOVED EXHAUST STACKS TO FACILTATE INSPECTING THE EXHAUST DUCT.A CRACK WAS FOUND IN THE SKI SLOPE.POWER SECTION WAS REMOVED FOR REPAIR.

2007FA0000406	BEECH	PWA	EXHAUST DUCT	CRACKED
6/11/2003	200BEECH	PT6A41	02R3022406	ENGINE

WHILE PREFORMING SCHEDULED MAINTENANCE,REMOVED EXHAUST STACKS TO FACILTATE INSPECTING THE EXHAUST DUCT.A CRACK WAS FOUND IN THE SKI SLOPE.POWER SECTION WAS REMOVED FOR REPAIR.

2007FA0000407	BEECH	PWA	EXHAUST DUCT	CRACKED
9/4/2006	200BEECH	PT6A41	02R3022406	ENGINE

WHILE PREFORMING SCHEDULED MAINTENANCE,REMOVED EXHAUST STACKS TO FACILTATE INSPECTING THE EXHAUST DUCT.A CRACK WAS FOUND IN THE SKI SLOPE.POWER SECTION WAS REMOVED FOR REPAIR.

2007FA0000408	BEECH	PWA	EXHAUST DUCT	CRACKED
3/26/2005	200BEECH	PT6A41	02R3022406	ENGINE

WHILE PREFORMING SCHEDULED MAINTENANCE,REMOVED EXHAUST STACKS TO FACILTATE INSPECTING THE EXHAUST DUCT.A CRACK WAS FOUND IN THE SKI SLOPE.POWER SECTION WAS REMOVED FOR REPAIR.

2007FA0000409	BEECH	PWA	EXHAUST DUCT	CRACKED

8/12/2006	200BEECH	PT6A41	02R3022406	ENGINE

WHILE PREFORMING SCHEDULED MAINTENANCE,REMOVED EXHAUST STACKS TO FACILTATE INSPECTING THE EXHAUST DUCT.A CRACK WAS FOUND IN THE SKI SLOPE.POWER SECTION WAS REMOVED FOR REPAIR.

2007FA0000435	BEECH	PWA	EXHAUST DUCT	CRACKED
2/9/2007	200BEECH	PT6A41	02R3022406	ENGINE

WHILE PREFORMING SCHEDULED MAINTENANCE,REMOVED EXHAUST STACKS TO FACILTATE INSPECTING THE EXHAUST DUCT.A CRACK WAS FOUND IN THE SKI SLOPE. EXHAUST DUCT SB HAD BEEN COMPLIED WITH 422 HOURS PRIOR. POWER SECTION WAS REMOVED FOR REPAIR.

2007FA0000433	BEECH	PWA	EXHAUST DUCT	CRACKED
6/29/2003	200BEECH	PT6A41	02R3022406	ENGINE

WHILE PREFORMING SCHEDULED MAINTENANCE,REMOVED EXHAUST STACKS TO FACILTATE INSPECTING THE EXHAUST DUCT.A CRACK WAS FOUND IN THE SKI SLOPE. EXHAUST DUCT SB HAD BEEN COMPLIED WITH 1171 HOURS PRIOR. POWER SECTION WAS REMOVED FOR REPAIR.

2007FA0000442	BEECH	PWA	EXHAUST DUCT	CRACKED
5/23/2005	200BEECH	PT6A41	02R3022406	ENGINE

WHILE PREFORMING SCHEDULED MAINTENANCE,REMOVED EXHAUST STACKS TO FACILTATE INSPECTING THE EXHAUST DUCT.A CRACK WAS FOUND IN THE SKI SLOPE. EXHAUST DUCT SB HAD BEEN COMPLIED WITH 495 HOURS PRIOR. POWER SECTION WAS REMOVED FOR REPAIR.

CA070314016	BEECH	PWA	ENGINE	VIBRATION
2/15/2007	400A	JT15D5		

(CAN) ENGINE EXHIBITED HEAVY VIBRATION DURING CRUISE AND WAS SHUTDOWN IN FLIGHT. MFG WILL INVESTIGATE THE EVENT AND ADVISE OF ROOT CAUSE ONCE DETERMINED. (TC NR 20070314016)

0093855	BEECH	HARTZL	HUB	CORRODED
11/3/2006	58		D2011	PROPELLER

HUB CORRODED BEYOND SPEC.

2007FA0000462	BEECH	CONT	CONT	SPRING	BROKEN
3/9/2007	58	IO550C	1051324	MAGNETO

WHILE TROUBLESHOOTING ENGINE RUNS ROUGH AND WON`T RUN AT ALL OVER 1200 RPM. WE DISCOVERED THE IMPULSE COUPLING SPRINGS ON BOTH MAGS WERE BROKEN. (IMPULSE COUPLING PN 10400309) (K)

2007FA0000461	BEECH	CONT	CONT	SPRING	BROKEN
3/9/2007	58	IO550C	1051324	MAGNETO

WHILE TROUBLESHOOTING ENGINE RUNS ROUGH AND WON'T RUN AT ALL OVER 1200 RPM. WE DISCOVERED THE IMPULSE COUPLING SPRINGS ON BOTH MAGS WERE BROKEN. (IMPULSE COUPLING , PN 10-400309) (K)

CA070321001	BEECH	PWA	GEARBOX	FAILED
3/7/2007	A100	PT6A28	115811020651	MLG

(CAN) GEAR WOULD NOT COME UP WHEN SELECTED, LANDING GEAR GEARBOX REPLACED. OVERHAUL FACILITY REPORTED THAT A INTERNAL GEAR MAY HAVE BEEN SHIMMED IMPROPERLY THAT CAUSED PREMATURE WEAR (TC# 20070321001)

2007FA0000524	BEECH	CONT	ENGINE	FAILED
5/11/2007	A36	IO550*		RIGHT

ON MAY 11, 2007 AT APPROXIMATELY 1815 EST, 2205Z, A BEECH BE-36-A36 BONANZA, N814JG, S/N E-2622, AT CRUISE HAD A DECREASE IN ENGINE CYLINDER TEMPERATURE, FOLLOWED BY A LOSS OF OIL PRESSURE AND ENGINE POWER WITH SUBSEQUENT ENGINE FAILURE. THE AIRCRAFT MADE AN EMERGENCY LANDING. PILOT

WALKED AWAY FROM THE AIRCRAFT WITH NO INJURIES. A VISUAL INSPECTION OF THE AIRCRAFT REVEALED A HOLE IN THE UPPER RIGHT HAND ENGINE COWLING APPROXIMATELY 3 INCHES IN DIAMETER WHICH WAS LIMITED TO SHEET METAL DAMAGE. UPON INSPECTION OF THE ENGINE COMPARTMENT THE FORWARD UPPER CASE OF THE ENGINE WAS HEAVILY DAMAGED REVEALING SEVERAL DAMAGED PISTONS, PISTON CONNECTING RODS BROKEN AND NR 6 CONNECTING ROD MISSING, ALONG WITH SEVERAL CRANKSHAFT BEARING JOURNALS HEAVILY DAMAGED/MELTED. EXACT FAILURE CAUSE UNDETERMINED. ENGINE RECORDS NOT SUPPLIED. CONTINENTAL SERVICE REPRESENTATIVE CONTACTED BY OWNER FOR FURTHER REVIEW.

2007FA0000470	BEECH		EVAPORATOR	UNSERVICEABLE
2/26/2007	B200		1013840245	AIR CONDITIONER

AFT CABIN AIR CONDITIONER EVAPORATOR RECEIVED FROM VENDER IN OVERHAULED CONDITION. INITIAL INSPECTION REVEALED HARD LINE. WHICH SHOULD RUN PARALLEL TO HEAT EXCHANGER, WAS INSTALLED APPROXIMATELY 25 DEGREES TO HEAT EXCHANGER. THE EVAPORATOR COULD NOT HAVE BEEN INSTALLED WITHOUT STRESSING AIRCRAFT HARD LINES. THIS LINE HAD BEEN REPAIRED (BY WELDING?) HOWEVER, THE INSIDE SURFACE STILL SHOWED SEVERE PITTING. THE UNIT WAS RETURNED TO VENDER AS WELL AS VENDER SHOULD HAVE CAUGHT THESE DEFECTS. (K)

CA070326003	BEECH	PWA	FRAME	CRACKED
2/14/2007	B200	PT642A	11543008435	FUSELAGE

(CAN) FRAME SEGMENT P/N 115-43008-35 CRACKED AT OB ENDS. AIRCRAFT IS AN EMS MACHINE. DEFECT APPEARS TO BE RELATED TO HIGH FLOOR LOADING. (TC NR 20070326003)

CA070514030	BEECH	PWA	LINE	FRACTURED
3/22/2007	B200	PT642A	33026779	FUEL CONTROL

(CAN) A FUEL LEAK WAS NOTED DURING GROUND OPERATIONS. SUBSEQUENT INSPECTION REVEALED A FRACTURE FUEL LINE AT THE FUEL CONTROL. (TC NR 20070514030)

PAI52007S4573	BEECH		SKIN	CRACKED
5/15/2007	B300		00011013333	WING

WHILE PERFORMING PHASE 2 INSPECTION NOTED AN 8 INCH LONG SPANWISE CRACK ON LOWER SURFACE OF WING LEADING EDGE SKIN P/N 000-110133-33. ALSO FOUND CHANNEL P/N 101-910119-147 INSIDE THE ABOVE MENTIONED SKIN BROKEN IN TWO. REPLACED BOTH PARTS WITH NEW PARTS FROM BEECH.

CA070322001	BEECH	PWA	PANEL	CRACKED
3/21/2007	B300	PT6A60A	1019800013	NACELLE

(CAN) PANEL IS INSTALLED ON RT IB SIDE OF NACELLE. IT COVERS THE FUEL FIREWALL SHUTOFF VALVE. THE PANEL IS MANUFACTURED WITH A BULGE TO ACCOMMODATE THE VALVE. IN THIS INSTALLATION THE VALVE CONNECTOR PLUG CHAFFED AGAINST THE PANEL CAUSING A STRESS RISER RESULTING IN A 1.5 CRACK VISIBLE FROM THE OUTSIDE OF THE PANEL. PANEL WAS REPAIRED IAW THE SRM 54-00-01. A NEW PANEL P/N 101-980001-41 WAS ORDERED. THIS ALTERNATE PANEL HAS A LARGER/DEEPER DEPRESSION TO BETTER ACCOMMODATE THE VALVE. (TC NR 20070322001)

CA070319006	BEECH	LYC	TAPPET	SPALLED
3/14/2007	B60	TIO541E1C4	77672	ENGINE

(CAN) ENGINE MODIFIED IAW FIREWALL FORWARD CENTRILUBE STC. PREVIOUS EXPERIENCE WITH THIS ENGINE SERIES PROMPTS REGULAR TAPPET INSPECTIONS. TAPPETS INSPECTED AND SPALLING WAS FOUND, EVEN ON THIS STC`D ENGINE. TAPPETS SENT TO FIREWALL FORWARD FOR EXAMINATION, AND ONLY 3 OF THE 12 TAPPETS WERE JUDGED REUSABLE. THIS TAPPET-BODY MANUFACTURING PROCESS HAS BEEN HIGHLY SUSPECT FOR MANY YEARS BY THIS SUBMITTER. (TC NR 20070319006)

TIMR20070003	BEECH		ACTUATOR	SEPARATED
5/21/2007	B99		998201233	NLG DOOR

DURING CRUISE, PILOT HEARD A CLUNK AND THE -GEAR IN TRANSIT- LIGHT CAME ON. RETURNED TO AIRPORT, PERFORMED FLY-BY WHICH CONFIRMED NOSE GEAR HANGING OUT BUT NOT FULLY EXTENDED. NOSE GEAR

COLLAPSED ON LANDING. INVESTIGATION REVEALED THAT THE ACTUATOR SHAFT HAD SHEARED JUST ABOVE THE CLEVIS BOLT CONNECTING TO THE DRAG BRACE.

2007FA0000410	BEECH	PWA	TUBE	BROKEN
1/10/2007	D18S	R985*	0923540	TIRE

THIS IS THE THIRD NEW MFG INNER TUBE THAT HAS SPLIT ALONG CIRCUMFERENTIAL WELDED SEAMS.

CA070322011	BEECH	LYC	WINDOW	BROKEN
3/22/2007	E95	IO360B1B	35410291652	COCKPIT

(CAN) IN CRUISE FLIGHT, AT 6000 FT, THE MAJORITY OF THE LT SIDE COCKPIT WINDOW DEPARTED THE AC. THE AC BEING CLOSE TO ITS INTENDED DESTINATION CONTINUED ON AND LANDED WITHOUT INCIDENT. A FLIGHT PERMIT WAS ISSUED AND THE AIRCRAFT FLOWN TO MAIN BASE FOR EVALUATION AND REPAIR. SPEAKING WITH THE PILOT THE WINDOW DID NOT APPEAR DAMAGED OR CRACKED PRIOR TO THE EVENT. THE SAME PILOT WHO FLEW THE SAME AIRCRAFT DAYS EARLIER MENTIONED HIS HEAD HIT THE WINDOW DURING AN ENCOUNTER WITH TURBULENT AIR BUT DID NOT FEEL IT WAS SEVERE ENOUGH TO CAUSE DAMAGE TO THE WINDOW. THE ONLY SUBSEQUENT DAMAGE TO THE AIRCRAFT WAS A SMALL CUT IN THE LT HORIZONTAL STABILIZER DE-ICE BOOT. THE AIRCRAFT IS AN UNPRESSURIZED AIRCRAFT. (TC NR 20070322011)

2007FA0000469	BEECH		LINK	DAMAGED
2/27/2007	F90		C611300518	NLG

THIS REPORT IS A RESULT OF REPLACEMENT OF THE FORWARD NOSE GEAR RETRACT CHAIN. TO REPLACE OR TO REINSTALL THIS CHAIN, A NEW PN C-6113005-18, CONNECTING LINK MUST BE USED. A NEW LINK SHOULD HAVE FIVE PIECES. ONE LINK ASSY WITH (2) SHAFTS SWAGED INTO AN END PLATE, TWO CENTER PLATES THAT SHOULD SLIP ONTO THE SHAFTS, ONE END PLATE, AND ONE SPRING CLIP RETAINER. THE END PLATE SHOULD HAVE SMALLER HOLES IN IT AND REQUIRE PRESSING FOR PROPER ASSY. THIS PRESSED FIT REQUIRES DISTRUCTION OF THE LINK DURING ASSY. WHEN INSTALLING THE NEW CHAIN AND INSTALLING THE NEW LINK, FOUND THAT ALL THREE PLATES HAD THE HOLE SIZE THAT WOULD ALLOW THEM TO BE SLIPPED ONTO THE SHAFTS WITHOUT PRESSING. CHECKED ANOTHER NEW LINK ASSY. THAT WAS IN STOCK AND FOUND THAT THE SAME CONDITION EXISTED. CALLED A TECH REPRESENTATIVE TO ASCERTAIN THAT THE PART HAD NOT BEEN CHANGED FOR EASIER ASSY. IT HAS NOT BEEN CHANGED. (K)

Y4MR200700521	BEECH	PWA	ENGINE	MAKING METAL
5/21/2007	F90	PT6A135	PT6A135	RIGHT

DURING CRUISE, RT ENGINE CHIP DETECTOR ILLUMINATED. OTHER RT ENGINE INDICATIONS WERE MONITORED CLOSELY FOR ANY SIGN OF MECHANICAL PROBLEM. NO OTHER INDICATIONS THAT WOULD SUGGEST MECHANICAL PROBLEMS WERE NOTED AT THAT TIME. THE CHIP LIGHT WENT OUT WITHIN A FEW MINUTES AND PILOT CONTINUED TO CLOSELY MONITOR RT ENGINE INDICATIONS. PRIOR TO START OF DESCENT (FROM 15000) FOR DESTINATION AIRPORT (BHM) PILOT NOTED SMALL FLUCTUATION IN RT ENGINE OIL PRESSURE FOLLOWED BY TORQUE FLUCTUATION (APPROXIMATELY 200 LBS); ITT INDICATION WAS STABLE. DECLARED AN EMERGENCY, SECURED ENGINE AS PRECAUTIONARY MEASURE, AND LANDED AT THE NEAREST AIRPORT WITHOUT INCIDENT. MAINTENANCE WAS DISPATCHED TO INVESTIGATE AND UPON INSPECTION FOUND THE TURBINE HAD FAILED. THE RT ENGINE CHIP DETECTOR LIGHT HAD ILLUMINATED APPROXIMATELY 30.0 HRS PRIOR TO ENGINE FAILURE. CHIP DETECTOR INSPECTED AT THAT TIME AND SMALL SLIVERS OF METAL WERE NOTED. OIL FILTER ALSO REMOVED, INSPECTED WITH NO DEFECTS NOTED, CLEANED, AND REINSTALLED. CHIP DETECTOR CLEANED AND REINSTALLED. A GROUND RUN-UP SATISFACTORY. AIRCRAFT TEST FLOWN FOR APPROXIMATELY 1 HOUR WITH NO CHIP LIGHT ILLUMINATION. CHIP DETECTOR REINSPECTED AND SMALL SLIVERS OF METAL WERE FOUND. CHIP DETECTOR CLEANED AND REINSTALLED. ONLY OTHER TIME THAT THE CHIP DETECTOR LIGHT ILLUMINATED WAS JUST PRIOR TO ENGINE FAILURE. ENGINE DUE OVERHAUL IN APPROXIMATELY 200.0 HRS. HOT SECTION INSPECTION HAD BEEN PERFORMED APPROXIMATELY 598.0 HRS AGO.

2007FA0000483	BEECH	CONT	UNKNOWN	UNKNOWN
5/25/2007	K35	IO470N		

LOST ELECTRICAL POWER.

CA070506001	BELL	LYC	NUT	DAMAGED

4/23/2007	204B	T5313B	204010765001	TAIL ROTOR

(CAN) ON APRIL 23, 2007 DURING A TEST FLIGHT FOR MAINTENANCE THAT WAS PERFORMED, THE PILOT EXPERIENCED AN UNCONTROLLED YAW TO THE RIGHT WHILE IN A 4 FOOT HOVER. THE HELICOPTER WAS IMMEDIATELY SET DOWN ON THE TARMAC. THERE APPEARED TO BE A STEP WORN IN THE INTERNAL WORM GEAR SPLINE OF NUT ASSEMBLY P/N 204-010-765-001 THAT MAY HAVE AFFECTED THE RIGGING PROCEDURE THAT WAS ACCOMPLISHED THE NIGHT BEFORE. NO DAMAGE TO HELICOPTER, CARS 625 APPENDIX G WAS PERFORMED AT THE SCENE WITH NO REPORTED DEFECT. ENTIRE QUILL ASSEMBLY WAS REPLACED; AIRCRAFT RECEIVED FURTHER INSPECTION AND RE-RIGGED TAIL ROTOR ASSEMBLY AND TEST FLOWN WITH NO DEFECT. TSB WAS NOTIFIED AND HAVE NOT FINISHED THEIR INVESTIGATION. PRODUCT SUPPORT ENGINEERING AT MFG WAS ALSO ADVISED. (TC NR 20070506001)

CA070321008	BELL	LYC		BEAM	CRACKED
3/21/2007	205A1	T5313B		205030163395	FUSELAGE

(CAN) WEB P/N 205-030-163-395 FOUND CRACKED AT INDUCTION BAFFLE SUPPORT WL 80.13. THE CRACK WAS APPROX 1 INCH IN LENGTH AND .5 INCH DOWN . REPAIR SCHEME IN PROGRESS THROUGH MFG. (TC NR 20070321008)

CA070524001	BELL	LYC		PUMP	FAILED
5/17/2007	205A1	T5317A	TA7		FUEL SYSTEM

(CAN) DURING HELI-PORTABLE SEISMIC DRILLING OPERATIONS, UPON DESCENT WITH AN EXTERNAL LOAD: THE MASTER CAUTION WARNING INDICATION WAS ILLUMINATED. THE LOAD WAS SET AND RELEASED. THE CAUTION PANEL OBSERVED TO REVEAL THAT THE ENGINE DRIVEN FUEL PUMP WARNING LIGHT WAS ON. THE P/C IMMEDIATELY ABORTED ANY FURTHER OPERATIONS AND RETURNED TO THE SERVICE LANDING WHICH WAS APPROXIMATELY ONE KILOMETER AWAY AND THE NEAREST SUITABLE LANDING SIGHT. A NORMAL LANDING AND ENGINE SHUTDOWN WAS CARRIED OUT. TROUBLESHOOTING BY THE AME AT SERVICE FOUND THAT IT WAS A POSITIVE INDICATION THAT ONE OF THE TWO PUMP ELEMENTS HAD FAILED TO DELIVER FUEL PRESSURE. AD 2006-11-16, 1250 HOUR MAIN AND SECONDARY DRIVE SHAFT AND PUMP GEAR SPLINES REPETITIVE INSPECTION APPLIES TO THIS UNIT AND WAS SATISFACTORILY PERFORMED 533.2 HOURS PREVIOUSLY. AT MAIN FUEL REGULATOR TSO: 1209.5 THE MAIN FUEL REGULATE PR WAS REMOVED AND REPLACED WITH A SERVICEABLE UNIT WITH NO FURTHER DEFECT. (TC NR 20070524001)

CA070511005	BELL	ALLSN		GOVERNOR	FAILED
5/2/2007	206B	250C20		23007505	ENGINE

(CAN) GOVERNOR DROOPED TO 95 PERCENT WOULD NOT RETURN TO 100 PERCENT. RETURNED TO BASE, TO CHANGE AIRCRAFT. DRIVE FROM GOVERNOR WAS BINDING INTERMITTENTLY. WHEN THE GOVERNOR WAS MOVED IT SOUNDED LIKE THERE WAS SOME PARTS LOOSE INTERNALLY. GOVERNOR REPLACED, PROBLEM RECTIFIED. (TC NR 20070511005)

CA070327003	BELL	ALLSN		FRICTION CUP	CRACKED
3/19/2007	206B	250C20		230321910	STARTER GEN

(CAN) DURING INSPECTON STARTER-GENERATOR FRICTION CUP PLATE WAS FOUND TO BE CRACKED. NEW PART ORDERED AND INSTALLED WHEM IT ARRIVED. (TC NR 20070327003)

CA070321011	BELL	ALLSN		MAST	CORRODED
3/21/2007	206B	250C20B		206010332121	MAIN ROTOR

(CAN) DURING ANNUAL INPECTION OF INTERIOR OF MAST, CORROSION AND PITTING WERE DISCOVERED. MAST WAS REMOVED AND SENT TO AN OVERHAUL FACILITY FOR REPAIR. (TC NR 20070321011)

CA070327009	BELL	ALLSN		GEARBOX	LEAKING
3/13/2007	206L	250C20R2		206040402003	

(CAN) OIL LEAK. SHIPPED TO AUTHORIZED SERVICE CENTER FOR REPAIR AND RE-INSTALLATION. (TC NR 20070327009)

CA070508002	BELL	ALLSN	BELL	LEG ASSY	BROKEN

5/7/2007	206L1	250C30	206064106	206064106001	ENGINE MOUNT

(CAN) ON STARTING A 200HR SCHEDULED INSPECTON FOUND LT ENGINE MOUNT LEG BROKEN IN (2) PIECES AND UPON REMOVAL FOUND SEVERE INTERNAL CORROSION THAT CAUSED THE WALL THICKNESS TO DEGRADE TO THE POINT OF COLLAPSE AND FAILURE. (TC NR 20070508002)

CA070514062	BELL	PWA		TURBINE BLADES	FRACTURED
4/26/2007	212	PT6T3B			ENGINE

(CAN) THE ENGINE CHIP DETECTOR WARNING ACTIVATED IN FLIGHT AND THE ENGINE SHUTDOWN UNCOMMANDED. SUBSEQUENT INSPECTION REVEALED FRACTURED POWER TURBINE BLADES. MFG WILL MONITOR INVESTIGATION AND ADVISE OF ROOT CAUSE ONCE DETERMINED (TC NR 20070514062)

CA070502011	BELL	PWA		TURBINE WHEEL	DAMAGED
4/20/2007	212	PT6T3B			NR 1

(CAN) IN FLIGHT SHUTDOWN OF NR 1 ENGINE. POWER TURBINE WHEEL SHED BLADES. DAMAGE FOUND ON MAIN ROTOR BLADES AND TAIL ROTOR BLADES. LARGE AMOUNTS OF METAL ON CHIP DETECTOR. (TC NR 20070502011)

CA070502002	BELL			HANGER ASSY	FAILED
4/26/2007	230			222044003107	TAIL ROTOR DRIVE

(CAN) T/R HANGAR BEARING ASSY FAILURE WAS DISCOVERED AFTER THE PILOT WAS ALERTED BY AN UNUSUAL NOISE UPON ENGINE START. (TC NR 20070502002)

CA070518007	BELL			GREASE FITTING	LOOSE
5/17/2007	407		407040303135	MS150011	HANGAR BRGS

(CAN) WHILE THE SHAFT WAS REMOVED THE MECHANIC WENT TO WIPE THE HANGER BEARING GREASE FITTING AND THE FITTING CAME OFF IN HIS HAND. ALL OTHER HANGER BEARING GREASE FITTINGS WERE THEN CHECKED AND 4 OUT OF THE 6 WERE FOUND TO BE VERY LOOSE. THE ONES WE FOUND LOOSE WERE AS FOLLOWS: BOTH FWD AND AFT OIL COOLER BLOWER HANGER BEARINGS AND THE 4TH AND 6TH HANGER BEARINGS. (TC NR 20070518007)

CA070511006	BELL	ALLSN		BLADE	CRACKED
4/30/2007	407	250C47B		406016100119	TAIL ROTOR

(CAN) TAIL ROTOR BLADE WAS FOUND CRACKED AT THE TIP BLOCK. (TC NR 20070511006)

CA070511007	BELL	ALLSN	BELL	SPRING	BROKEN
4/30/2007	407	250C47B	407010150105	407310104105	FRAHM ASSY

(CAN) 2 SPRINGS WERE FOUND BROKEN. (TC NR 20070511007)

CA070604001	BELL	ALLSN	ALLSN	GEARBOX	SEIZED
6/3/2007	407	250C47B	250C47B	23063393	MAIN ROTOR

(CAN) ENGINE CHIP ILLUMINATED, APPROX 3-4 SECONDS LATER ENGINE FAILED. (TC NR 20070604001)

CA070427005	BELL	ALLSN		SPRING	BROKEN
4/16/2007	407	250C47B		407310104103	MAIN ROTOR

(CAN) UPON SCHEDULED INSPECTION IT WAS NOTICED THAT ONE OF THE EIGHT SPRINGS IN THE MAIN ROTOR FRAME ASSEMBLY WAS BROKEN. (TC NR 20070427005)

CA070514014	BELL	PWA		SPLINE	WORN
3/12/2007	412EP	PT6T3			FUEL PUMP

(CAN) THE ENGINE SUFFERED AN IN-FLIGHT SHUTDOWN DUE TO FUEL STARVATION AS A RESULT OF WORN FUEL PUMP DRIVE SHAFT SPLINES. (TC NR 20070514014)

2007FA0000456	BNORM			FORK	UNSERVICEABLE

5/16/2007	BN2		B24573	PITCH CHANGE

STEEL FATIGUE CRACK NDT (MAGNETIC PARTICLE) DETECTED. PROPELLER ASSY RECEIVED FOR STANDARD OVERHAUL AND DEFECT FOUND IN PROPELLER ASSY (PN C2K00500, DESCRIPTION HC-C2YK-2CUF/FC8477A-4, SN AU9949B), UNDER WO NR 38425A.

CA070530006	BOEING		WARNING SYSTEM	ACTIVATED
5/30/2007	727225			CABIN PRESSURE

(CAN) AFTER DEPARTURE, WHEN AT 13,000 FEET ALT WARNING HORN SOUNDED AND COULD NOT BE SILENCED WITH THE HORN CUTOUT. CREW TRIED SWITCHING TO STBY WITH NO RESULTS. HORN CONTINUED ON APPROACH. AT TIME OF INITIAL HORN, CABIN PRESSURE WAS 5000 FT AND 5PSI DIF. THE AIRCRAFT DUMPED FUEL FOR THE LANDING AND LANDED SUCCESSFULLY AND RETURNED TO THE RAMP. THE MAINTENANCE PERSON CARRIED OUT MM SYSTEM TESTS WITH NO FAULTS. AIRCRAFT WAS GROUND PRESSURIZED AND AGAIN NO FAULTS. THE CREW ATTEMPTED A SECOND DEPARTURE AND HAD THE WARNING COME ON AT 9000 FT. AIRCRAFT RETURNED TO DEPARTURE POINT AND IS AOG WHILE TROUBLESHOOTING IS IN PROGRESS. OPERATOR WILL ADVISE SDR REPORTING OF RECTIFICATION WHEN IT IS ESTABLISHED. (TC NR 20070530006)

CA070515003	BOEING	PWA	TUBE	CHAFED
5/7/2007	727225	JT8D15	65178444441	HYD SYSTEM

(CAN) IB, HYDRAULIC A SYS PRESSURE WAS NORMAL ON APPROACH AND QUANTITY REPORTED APPROXIMATELY ZERO. UPON SELECTION OF FLAPS, QUANTITY READ ZERO AND LOW PRESSURE LIGHTS ILLUMINATED. FLIGHT CREW DECLARED AN EMERGENCY AND THE HYDRAULIC FAILURE CHECKLIST WAS CARRIED OUT AFTER MISSED APPROACH PROCEDURE. THE AIRCRAFT LANDED NORMALLY WITH NO FURTHER INCIDENT. A HYD LEAK WAS FOUND INSIDE THE AFT AIRSTAIR AREA ON THE LT SIDE. THE HYDRAULIC A SYSTEM PRESSURE LINE FROM THE NR 1 ENGINE TO THE HYDRAULIC A SYSTEM MODULE WAS FOUND CHAFED WHERE THE LINE COMES INTO THE AFT AIRSTAIR AREA FROM THE NR 1 ENGINE PYLON. THE CHAFED LINE WAS CAUSED BY EXCESSIVE PLAY OF THE HYDRAULIC TUBING FIRE SEAL BETWEEN THE PYLON AND THE AFT AIRSTAIR AREA. (TC NR 20070515003)

CA070427006	BOEING	PWA	ATTACH BRACKET	CRACKED
4/10/2007	727225	JT8D15		NR 7 SLAT

(CAN) DURING A AND B5 INSPECTION NR 7 SLAT ATTACH BRACKET UPPER MOUNT ON FRONT SPAR CRACKED. P/N TO BE DETERMINED FROM MFG ENGINEERING DRAWINGS. RDA ISSUED BY DECA ENGINEERING TO REPAIR. (TC NR 20070427006)

CA070323004	BOEING		BULB	FAILED
3/22/2007	727247		387	MLG INDICATOR

(CAN) AIRCRAFT ON MARCH 22, 2007 WAS ON APPROACH WHEN THE CREW EXTENDED THE LANDING GEAR FOR LANDING. WHEN THE GEAR WAS DOWN, THE CREW NOTICED THAT THE LT MAIN GEAR GREEN LOCKED LIGHT WAS NOT ILLUMINATED. THE CREW REJECTED THE LANDING AND CONTACTED ATC FOR A NEW APPROACH LINE-UP. THE SECOND APPROACH REVEALED THE SAME RESULTS. THE CREW REMOVED AND REPLACED A FAULTY BULB AND THE AIRCRAFT LANDED WITH NO FURTHER INCIDENTS. MAINTENANCE CHECKED THE SYSTEM AND CHECKED THAT THE CORRECT BULB WAS USED. NO FURTHER PROBLEMS. (TC NR 20070323004)

CA070424007	BOEING	PWA	PWA	BLADE	FAILED
4/23/2007	727247	JT8D15		JT8D15QM	COMPRESSOR

(CAN) DURING TAKEOFF ROLL AT 80KTS, THE TOWER ADVISED THE CREW THAT FLAMES WERE VISIBLE OUT OF ONE OF THE ENGINES. THE CREW REJECTED THE TAKEOFF AND ENGINES WERE SHUTDOWN. THE AIRCRAFT WAS TOWED BACK TO THE RAMP. MAINTENANCE INSPECTED THE ENGINES AND FOUND NR 2 ENGINE TO HAVE TURBINE DAMAGE. SOME INTERNAL ENGINE PARTS HAD EXITED THE ENGINE AND WERE FOUND ON THE RUNWAY. (16 IN YYC). AT THIS TIME IT LOOKS AS THOUGH THE FAILURE STARTED WITHIN THE COMPRESSOR SECTION. THE ENGINE IS CURRENTLY BEING REMOVED FROM THE AIRCRAFT AND A FOLLOW-UP TO THIS SDR SHALL BE ACCOMPLISHED ONCE THE ENGINE HAS BEEN DISASSEMBLED FOR INSPECTION. (TC NR 20070424007)

CA070518005	BOEING	PWA	DUCT	RUPTURED

5/16/2007	727260	JT8D17	69474753	BLEED AIR

(CAN) WHILE PERFORMING THE DAILY INSPECTION, MAINTENANCE PERSONNEL HEARD A LOUD BANG, WHICH WAS FOLLOWED BY A DROP IN APU DUCT PRESSURE TO 0 PSI. UPON INSPECTION, 2 BLEED AIR DUCTS WERE FOUND RUPTURED, FORWARD OF THE APU LOAD CONTROL VALVE THAT CONNECT TO THE BLEED AIR BY-PASS VALVE. NO ADDITIONAL DAMAGE PROBLEMS WERE NOTED. NOTE: INFORMATION LISTED ABOVE IN AREA 9, BLOCK(B) PN. THE PN LISTED ARE FOR THE TWO DUCT ASSEMBLIES THAT WERE FOUND DAMAGED. DUCT P/N 69-47475-3 AND 69-47474-3 (TC NR 20070518005)

CA070531003	BOEING	PWA	PITOT SYSTEM	OBSTRUCTED
5/30/2007	727260	JT8D17		PITOT/STATIC SYS

(CAN) THE AIRCRAFT BEGAN THE TAKEOFF ROLL WHEN THE FLIGHT CREW NOTICED A LAG IN THE FIRST OFFICERS AIR SPEED INDICATION. THE TAKEOFF WAS ABORTED AND THE AIRCRAFT RETURNED TO THE GATE WITH NO ADDITIONAL PROBLEMS. UPON INSPECTION OF THE FIRST OFFICERS PITOT INSTALLATION AN OBSTRUCTION WAS FOUND (BUG/INSECT) AND WAS REMOVED. THE PITOT STATIC SYSTEM WAS TESTED IAW THE AIRPLANE MM WITH NO FURTHER FAULTS. THE AIRCRAFT WAS RETURNED TO SERVICE. (TC NR 20070531003)

CA070504010	BOEING	PWA	SWITCH	INTERMITTENT
5/2/2007	737201	JT8D17	MS253831	MLG HANDLE

(CAN) ON FINAL APPROACH, THE FLIGHT CREW SELECTED LANDING GEAR DOWN. THE LAND GEAR INDICATORS ILLUMINATED 3 GREEN AND 3 RED. THIS INDICATED A DISAGREEMENT BETWEEN LANDING GEAR HANDLE POSITION AND LANDING GEAR POSITION. THE FLIGHT CREW SELECTED GEAR UP AND ABORTED THE LANDING. ON THE DOWNWIND LEG THE FLIGHT CREW SELECTED LANDING GEAR DOWN AND ALL ILLUMINATION WAS NORMAL (3 GREEN AND NO RED ILLUMINATION). THE FLIGHT CREW LANDED UNEVENTFUL. MAINTENANCE INSERTED THE LANDING GEAR PINS AND SELECTED GEAR UP AND DOWN NUMEROUS TIMES AND WAS NOT ABLE TO DUPLICATE THE PROBLEM. THE AIRCRAFT WAS RELEASED AND CONTINUES TO FLY WITHOUT REOCCURRENCE OF THE PROBLEM. OPERATOR HAS ORDERED AN NEW LANDING GEAR HANDLE SWITCH AND WILL BE REPLACING THIS AS A PRECAUTIONARY MEASURE. (TC NR 20070504010)

SROM200700004	BOEING	VALVE	FLUTTER
5/31/2007	737205	28410	FLOW CONTROL

AFTER TAKEOFF AT AROUND 1000 FEET VIBRATION STARTED IN FWD PART OF AIRCRAFT AND TRAVELED TO REAR OF AIRCRAFT. AFTER SHUTTING OFF ALL PACKS AND BLEEDS IT SLOWLY WENT AWAY. AIRCRAFT RETURNED TO DEPARTURE AIRPORT. AIRCRAFT INSPECTED WITH NO FAULTS FOUND AND RELEASED FOR FLIGHT TO MAINTENANCE BASE WITH SLIGHT VIBRATION NOTED IN FLOOR. FURTHER INSPECTION FOUND CRACKED E&E BAY COOLING DUCT AND CHATTERING E&E BAY FLOW CONTROL VALVE. REPLACED DUCTS AND VALVE. NO REPORTS OF VIBRATION ON SUBSEQUENT FLIGHT.

SROM200700002	BOEING	DOOR	BINDING
5/16/2007	737205		NLG

LOUD VIBRATION AFTER TAKEOFF. VIBRATION INCREASED WITH SPEED AND DECREASED AT LOWER SPEEDS. RETURNED TO DEPARTURE AIRPORT. PERFORMED VIBRATION CONDITIONAL INSPECTION. FOUND NLG DOORS ON GRAVEL SKI EQUIPPED AIRCRAFT TO BE BINDING ON EACH OTHER. ADJUSTED PER AMM 32-22-12. AIRCRAFT RELEASED AN OPERATIONAL CHECK FLIGHT NORMAL. NO REPORT OF VIBRATION ON SUBSEQUENT FLIGHTS.

SROM200700003	BOEING	BEARING	LOOSE
5/22/2007	737205		ROD END

AIRFRAME BUFFET NOTED AFTER GEAR UP ON TAKEOFF & BEFORE FLAP RETRACTION & POWER REDUCTION DURING CLIMB. THIS IS THE 2ND WRITE UP OF THIS CONDITION. PERFORMED AIRFRAME CONDITIONAL INSPECTION. REPLACED NLG GRAVEL SKI DEFLECTOR ACTUATOR DUE TO LOOSE ROD END AND REPLACED BEARING IN LEFT INBOARD GROUND SPOILER OUTBOARD ACTUATOR LINKAGE DUE TO LOOSENESS. AIRCRAFT RELEASED FOR OPERATION CHECK FLIGHT WITH NO REPORTS OF VIBRATION ON TWO TAKEOFFS DURING CHECK FLIGHT.

CA070504004	BOEING	PWA	SKIN	CRACKED
4/30/2007	7372L9	JT8D17		BS 727

(CAN) DURING WASHING PROCEDURE MAINTENANCE DETECTED A SKIN CRACK AT BS727, WL215, APPROXIMATELY 1.5 INCHES LONG. THIS IS KNOWN AREA ADDRESSED BY SB 737-53-1065. THE AREA WAS REPAIRED IAW THE MANUFACTURERS SRM AND RETURNED TO SERVICE (TC NR 20070504004)

CA070504001	BOEING	RROYCE		LINE	LEAKING
5/1/2007	757236	RB211535E437		312N570138	

(CAN) FORWARD PYLON PRESSURE LINE FOUND CHAFED THROUGH CAUSING LEAK. DAMAGE CAUSED BY A DEFECTIVE HOSE CLAMP. (TC NR 20070504001)

CA070514031	BOEING	PWA		TRANSFORMER	OPEN
5/12/2007	767233	JT9D7R4D	736664A		IDG

(CAN) DURING CRUISE, THE LT AC BUS FAILED WITH THE LOSS OF ASSOCIATED SYSTEMS. THE CONCERN WAS BEING ABLE TO START THE APU. FLIGHT DECLARED A PAN-PAN WITH ATC AND BEGAN DIVERSION. AT FL 350, 2 APU START ATTEMPTS, BUT START WAS ACHIEVED ONLY AT FL150. IAW CHECKLIST, LT BUS TIE SWITCH WAS RESET, AND LT BUS RESTORED. HOWEVER, APU GEN AND GEN FAILED LIGHTS WERE ON. ACFT LANDED APPROX 3 TONS OVERWEIGHT. MTC CARRIED OUT WIRING CHECKS IAW FIM 24-20-00-101, AND FOUND THE LT IDG CURRENT TRANSFORMER OPEN. THEY REPLACED THE LT IDG AND LT GCU IAW AMM 24-11-01-401 AND 24-22-02. NOTE: GCU WAS CHANGED ALONG WITH THE IDG. THE REMOVED GCU INFO IS: P/N 734284D, S/N 1696, 73326 HOURS TOTAL TIME (TC NR 20070514031)

CA070511009	BOEING	GE	MESSIER	TIE BOLT	SHEARED
5/11/2007	767328	CF680C2B6F	C20509000	2601483	MLG WHEEL

(CAN) DURING ROUTINE WALKAROUND CHECK AFTER LANDING, A TIE BOLT FOR NR 2 MLG WHEEL WAS FOUND BROKEN. BROKEN PARTS FOUND JAMMED IN THE BRAKE ASSY CAUSING DAMAGES TO BOTH WHEEL ASSY AND BRAKE ASSY. FURTHER INVESTIGATION ON GOING AS TO THE CAUSE OF BOLT FAILURE. (TC NR 20070511009)

CA070528010	BOEING	GE		UNKNOWN	MALFUNCTIONED
5/26/2007	767333	CF680C2B6F			GALLEY

(CAN) A FLIGHT ATTENDANT RECEIVED AN ELECTRIC SHOCK FROM THE WATER DISPENSER IN THE REAR GALLEY. COFFEE MAKERS REMOVED, GALLEY WIRING INSPECTED AND CONTINUITY CHECK CARRIED OUT (L-4355954). MORE IT TROUBLESHOOTING STEPS HAVE BEEN PROVIDED BUT NOT COMPLETED YET. (TC NR 20070528010)

CA070522001	BOLKMS	ALLSN		SPRING	BROKEN
5/18/2007	BO105S	250C20B	10562648	V40GT3911AA	ENGINE COWLING

(CAN) COMING OUT OF A MAJOR INSPECTION WHERE THE EJECTION SPRING ON ALL THE COWLS (P/N 105-62648, 105-62664, 105-62643 AND 105-62663) WERE REPLACED, SEVERAL EJECTION SPRING P/N V40GT39-1-1AA WERE BREAKING IN TWO PIECES. THIS PROBLEM HAPPENED STATICALLY AND IN FLIGHT. THESE EJECTION SPRINGS WERE ORDERED NEW FROM MFG AND RECEIVED ON DEC 22/06. BATCH NR S200602192. (TC NR 20070522001)

CA070518009	BOMBDR	GE		RELIEF VALVE	MALFUNCTIONED
5/16/2007	CL6002D15	CF34*		9752753	HYDRAULIC SYS

(CAN) ON PUSHBACK FROM GATE CREW RECEIVED NOSE STEERING INOP MESSAGE. AIRCRAFT STEERING MEL`D. AFTER TAKEOFF GEAR FAILED TO RETRACT. AIRCRAFT RETURNED TO ORIGINATING AIRPORT FOR NORMAL LANDING. MAINTENANCE TROUBLESHOOTING REPLACED HYD BALANCE RELIEF VALVE, NR 3 HYD SYSTEM BLED, GEAR SWINGS COMPLETED, AIRCRAFT RETURNED TO SERVICE. (NOTE: PART AT LAST REPAIR HAD BEEN RETURNED TO VENDOR AS CAUSING NOSE STEERING INOP (1875HR/853CY TSN) (TC NR 20070518009)

CA070509001	BOMBDR	PWC		WINDSHIELD	CRACKED
5/7/2007	DHC8400	PW150A		80260008	COCKPIT

(CAN) IN CRUISE FLIGHT AT 25,000, THE FO`S WINDSHIELD CRACKED. REMOVED AND REPLACED FO`S WINDSHIELD I/A/W Q 400 TASK 56-10-01-000-801 AND TASK 56-10-01-400-801, REMOVED AND REPLACED FO`S WINDSHIELD ANTI-ICE CONTROLLER I/A/W Q 400 TASK 30-41-01-00-801 AND TASK 30-41-01-400-801 OP`S TEST GOOD. (TC NR 20070509001)

CA070514038	BOMBDR	PWC	PACKING	LEAKING
3/28/2007	DHC8400	PW150A		OIL PUMP

(CAN) ENGINE OIL PRESSURE FLUCTURATED DURING FLIGHT AND OIL WAS SEEN EXITING THE ENGINE COWLINGS. SUBSEQUENT INSPECTION REVEALED A DAMAGED OIL PUMP O-RING PACKING. (TC NR 20070514038)

CA070514017	BOMBDR	PWC	STATOR	DAMAGED
3/16/2007	DHC8400	PW150A		COMPRESSOR

(CAN) THE ENGINE EXPERIENCED COMPRESSOR STALLS ON TAKEOFF ROLL AND THE TAKEOFF WAS ABORTED. SUBSEQUENT INSPECTION REVEALED A DAMAGED SECOND STAGE COMPRESSOR STATOR. MFG WILL INVESTIGATE THE EVENT AND ADVISE OF ROOT CAUSE ONCE ESTABLISHED. (TC NR 20070514017)

CA070425003	BOMBDR	PWC	GENERATOR	LACK OF LUBE
4/19/2007	DHC8400	PW150A	11522184	NR 1

(CAN) DURING APPROACH TO BASE AT 1000 FEET, THE NR 1 AC GENERATOR CAUTION LIGHT ILLUMINATED. PILOT CYCLED THE NR 1 AC GENERATOR AND THEN THE AC GENERATOR HOT CAUTION LIGHT ILLUMINATED AS WELL AS THE AC GENERATOR CAUTION LIGHT. AFTER TOUCHDOWN WHEN PLA RETARDED TO DISC THE NR 1 OIL PRESS WARNING LIGHT ILLUMINATED AND THE ENGINE WAS SHUTDOWN. GROUND INSPECTION REVEALED: AC GEN OVERHEATED, AC GEN QUILL SHAFT SEPARATED, NO OIL ON THE SIGHT GAGE, NO EXTERNAL LEAK, METAL TRAPPED ON THE AC GEN MCD 41 SEC, LOW OIL PRESS EXCEEDED, RECORDED IN EMU. NR 1 ENGINE REPLACED DUE TO THE EXCEEDING. (TC NR 20070425003)

CA070426005	BOMBDR	PWC	SEAL	MISSING
4/20/2007	DHC8400	PW150A	RD8457049	RT OB FLAP

(CAN) AFTER 30 MINS INTO FLIGHT, CREW REPORT AILERON MISMATCH, AP DISCONNECTED AND AILERON STUCK. PILOT USED FORCE TO RELEASE AILERONS. REST OF FLT SYSTEM, OPS NORMAL. THIS WAS THE FIRST FLT OF THE DAY AND THE TEMP AT FL250 WAS -45 DEG C. FOUND RT FLAP SEAL LOOSE, PART MISSING AND LT FLAP SEAL LOOSE. LT AND RT FLAP SEALS REPLACED. (TC NR 20070426005)

CA070213007	BOMBDR	PWC	SEQUENCE VALVE	FAILED
2/6/2007	DHC8400	PW150A	483023	NLG

(CAN) NOSE LANDING GEAR DOORS WOULD NOT CLOSE ON GEAR RETRACTION. GEAR WOULD NOT EXTEND NORMALLY SO CREW DID AN ALTERNATE GEAR EXTENSION. REPLACED VALVE,SOLENOID SEQUENCE AS WE HAD DEALT WITH THIS ISSUE A WEEK EARLIER ON ANOTHER AIRCRAFT (TC# 20070213007).

CA070321009	BOMBDR	PWC	BUSS BAR	SHORTED
3/5/2007	DHC8400	PW150A	697070212	PROP HUB

(CAN) NR 2 ENGINE SHUTDOWN MANUALLY IN FLT DUE PEC FAIL CAUTION AND PROP SPEED AT 1060 RPM. FAULT CODES RT CH A/B 160 AND 162. MAINT DISPATCHED TO T/S. FOUND BUSBAR FOR PROPELLER DEICE CHAFFING ON MPU BRACKET, CAUSING MPU TO PICKUP SENS FROM BUSBAR. MPU ADJUSTED AND NEW BUSBAR INSTALLED. ENGINE GROUND RUNS C/O NORMAL. (TC NR 20070321009)

CA070314017	BOMBDR	PWC	APU	MALFUNCTIONED
3/12/2007	DHC8400	PW150A	4503067A	APU BAY

(CAN) CREW MADE A NORMAL APU START REQUEST, A FEW SECONDS LATER HEARD A LOUD BANG AND GOT THE APU FAIL ADVISORY LIGHT. APU ENCLOSURE SUFFERED STRUCTURAL DAMAGE AFTER FUEL VAPOR IGNITED. NO FIRE LIGHT OR FIRE NOTED. EXAMINATION OF APU COMPARTMENT AREA REVEALED THAT APU ACCESS DOORS DEPARTED THE TAILCONE. TAIL CONE TO BE REPLACED. (TC NR 20070314017)

CA070315005	BOMBDR	PWC	BEARING	DAMAGED
2/15/2007	DHC8400	PW150A	29685	NR 4 MAIN WHEEL

(CAN) AFTER LANDING, A PIECE OF NR4 BRAKE DISK WAS FOUND AT THE SPOT WHERE THE A/C WAS PARKED. A/C WAS INSPECTED AND THE FOLLOWING ARE REPORTED. FOUND DAMAGE AT INNER BEARING AFTER THE INSPECTION WITH NR 4 WHEEL ASSEMBLY WAS REMOVED. WHEEL BRAKE AND AXLE ASSYS REPLACED. (TC NR

CA070319009	BOMBDR	PWC	WIRE HARNESS	DAMAGED
2/9/2007	DHC8400	PW150A		NLG WOW

(CAN) AFTER TAKE OFF, ALL THREE GEAR FAILED TO RETRACT. (3) RED AND (3) GREEN LIGHTS REMAINED ILLUMINATED. RAN CHECKLIST, NO HELP. HANDLE DID ILLUMINATE AMBER. FLIGHT WAS DIVERTED BACK TO BASE. MAINTENANCE REMOVED AND REPLACED NLG WOW 2 CENTERING WIRING HARNESS. (TC NR 20070319009)

CA070320001	BOMBDR	PWC	WINDSHIELD	CRACKED
2/7/2007	DHC8400	PW150A	80260006	COCKPIT

(CAN) RT WINDSHIELD SPIDER WEBBED AT 24,000 FT CRUISE. WINDSHIELD HEAT ON. NO CAUTION LIGHTS. FLIGHT WAS DIVERTED BACK TO BASE. MAINTENANCE REPLACED RT WINDSHIELD IAW AMM 56-10-01. (TC NR 20070320001)

CA070313004	BOMBDR	PWC	LANDING GEAR	INOPERATIVE
3/13/2007	DHC8400	PW150A		NOSE

(CAN) DURING APPROACH TO BASE, THE NLG DOORS DID NOT OPEN AND THE NLG DID NOT EXTEND. APPROACH CANCELLED, AIRCRAFT ENTERED HOLDING PATTERN. GEAR CYCLED WITHOUT SUCCESS NLG EXTENSION. MLG OPERATED NORMALLY. ALTERNATE EXTENSION PROCEDURE CONDUCTED. NLG REMAINED RETRACTED AND NLG DOORS REMAINED CLOSED. AIRCRAFT PERFORMED A TOUCH AND GO TO SHOCK THE NLG DOWN, WITHOUT SUCCESS. AIRCRAFT CONDUCTED A 60-DEGREE BANK TO APPLY POSITIVE G IN AN EFFORT TO EXTEND THE NLG WITHOUT SUCCESS. AIRCRAFT LANDED WITH NLG RETRACTED. TO COMPLETE FULL INVESTIGATION. AOM NR 210 ISSUED. (TC NR 20070313004)

CA070319001	BRAERO	RROYCE	PRESSURE SWITCH	MALFUNCTIONED
3/12/2007	HS7482A	DART5342	BAS30198	HEATER

(CAN) DURING DEPARTURE THE AIRCRAFT`S HEATER FAILED AND THE CREW WAS UNABLE TO RESTART THE HEATER. THE AIRCRAFT RETURNED TO POINT OF DEPARTURE AND LANDED WITHOUT FURTHER PROBLEM. MAINTENANCE REPLACED THE HEATER PRESSURE SWITCH AND THE AIRCRAFT RETURNED TO SERVICE AFTER SATIFACTORY GROUND CHECK. (TC NR 20070319001)

CA070507011	BRAERO	RROYCE	WIRE HARNESS	DAMAGED
5/4/2007	HS7482A	DART5342		LT MLG WW

(CAN) DEPARTING THE LANDING GEAR SELECT LEVER WOULD NOT MOVE TO THE GEAR UP POSITION. THE AIRCRAFT RETURNED TO POINT OF DEPARTURE AND LANDED WITHOUT FURTHER PROBLEM. MAINTENANCE DETERMINED THE SOURCE OF THE PROBLEM WAS IN THE LT GEAR HARNESS WHEELWELL CONNECTOR. THE WIRING WAS REPAIRED AND THE AIRCRAFT RETURNED TO SERVICE. (TC NR 20070507011)

2007FA0000425	CESSNA	CONT	RIB	CRACKED
5/15/2007	150E	O200A	0432001466	HORIZONTAL STAB

DURING LT LEADING EDGE SKIN REPLACEMENT OF HORIZONTAL STABILIZER DUE TO BIRD STRIKE FOUND BOTH IB LEADING EDGE RIBS PN 0432001-46/ -6 CRACKED THROUGH UPPER AND LOWER MOUNTING TABS. WORKING RIVETS WERE FOUND AT THE TABS AND 2 RIVETS OB ON FORWARD SPAR. BIRD STRIKE DID NOT CAUSE CRACKS. THESE TABS ARE DIFFICULT TO INSPECT WITHOUT DISASSEMBLY OF TAIL. ANY EVIDENCE OF DEFECTS IN THE TAIL STRUCTURE SHOULD BE INVESTIGATED THOROUGHLY AS THEY ARE PRONE TO CRACKING AND WEAR.

2007FA0000426	CESSNA	CONT	RIB	CRACKED
5/15/2007	150E	O200A	0432001466	HORIZONTAL STAB

DURING LT LEADING EDGE SKIN REPLACEMENT OF HORIZONTAL STABILIZER DUE TO BIRD STRIKE FOUND BOTH IB LEADING EDGE RIBS PN 0432001-46/ -6 CRACKED THROUGH UPPER AND LOWER MOUNTING TABS. WORKING RIVETS WERE FOUND AT THE TABS AND 2 RIVETS OB ON FORWARD SPAR. BIRDSTRIKE DID NOT CAUSE CRACKS. THESE TABS ARE DIFFICULT TO INSPECT WITHOUT DISASSEMBLY OF TAIL. ANY EVIDENCE OF DEFECTS IN THE TAIL STRUCTURE SHOULD BE INVESTIGATED THOROUGHLY AS THEY ARE PRONE TO CRACKING AND WEAR.

2007FA0000427	CESSNA	CONT	RIB	CRACKED

5/15/2007	150E	O200A	0432001466	HORIZONTAL STAB

DURING LT LEADING EDGE SKIN REPLACEMENT OF HORIZONTAL STABILIZER DUE TO BIRDSTRIKE FOUND BOTH IB LEADING EDGE RIBS PN 0432001-46/ -6 CRACKED THROUGH UPPER AND LOWER MOUNTING TABS. WORKING RIVETS WERE FOUND AT THE TABS AND 2 RIVETS OB ON FORWARD SPAR. BIRDSTRIKE DID NOT CAUSE CRACKS. THESE TABS ARE DIFFICULT TO INSPECT WITHOUT DISASSEMBLY OF TAIL. ANY EVIDENCE OF DEFECTS IN THE TAIL STRUCTURE SHOULD BE INVESTIGATED THOROUGHLY AS THEY ARE PRONE TO CRACKING AND WEAR.

2007FA0000428	CESSNA	CONT	RIB	CRACKED
5/15/2007	150E	O200A	0432001466	HORIZONTAL STAB

DURING LT LEADING EDGE SKIN REPLACEMENT OF HORIZONTAL STABILIZER DUE TO BIRDSTRIKE FOUND BOTH IB LEADING EDGE RIBS PN 0432001-46/ -6 CRACKED THROUGH UPPER AND LOWER MOUNTING TABS. WORKING RIVETS WERE FOUND AT THE TABS AND 2 RIVETS OB ON FORWARD SPAR. BIRDSTRIKE DID NOT CAUSE CRACKS. THESE TABS ARE DIFFICULT TO INSPECT WITHOUT DISASSEMBLY OF TAIL. ANY EVIDENCE OF DEFECTS IN THE TAIL STRUCTURE SHOULD BE INVESTIGATED THOROUGHLY AS THEY ARE PRONE TO CRACKING AND WEAR.

2007FA0000434	CESSNA	CONT	MUFFLER	CRACKED
5/15/2007	150E	O200A	E477001	ENGINE

PILOT REPORTED FATIGUE WHILE FLYING. NO OBVIOUS EXTERNAL SIGNS OF MUFFLER FAILURE WERE FOUND, SHROUD REMOVAL REVEALED A TIGHT CRACK FROM NR 2 RISER INTO BODY, 3 INCHES LONG THAT LT VERY LITTLE STAINING ON INSIDE OF SHROUD. MUFFLER BODY WAS DEFORMED WHERE RISER IS WELDED INTO BODY, NEW MUFFLER HAD NO DEFORMATION IN THIS AREA.

2007FA0000429	CESSNA	CONT	MUFFLER	CRACKED
5/15/2007	150E	O200A	E477001	ENGINE

PILOT REPORTED FATIGUE WHILE FLYING. NO OBVIOUS EXTERNAL SIGNS OF MUFFLER FAILURE WERE FOUND, SHROUD REMOVAL REVEALED A TIGHT CRACK FROM NR 2 RISER INTO BODY, 3 INCHES LONG THAT LEFT VERY LITTLE STAINING ON INSIDE OF SHROUD. MUFFLER BODY WAS DEFORMED WHERE RISER IS WELDED INTO BODY, NEW MUFFLER HAD NO DEFORMATION IN THIS AREA.

2007FA0000479	CESSNA	CONT	SEAT	CRACKED
5/16/2007	150F	E185*	04101342	COCKPIT

SEAT PAN WAS FOUND CRACKED AT THE FORWARD END OF PILOTS OB SEAT RAIL STIFFENER, APPROXIMATELY 1 NR LONG ACROSS SCREW HOLES. STIFFENER PN 0411546-1 WAS ALSO CRACKED AT CUTOUT FOR FUEL LINE. TOTAL AIRFRAME TIME UNKNOWN, BUT GREATER THAN 1300 HOURS. THESE CRACKS ARE SOMEWHAT COMMON ON 3000 TO 5000 HOUR AIRPLANES.

CA070530003	CESSNA	LYC	CRANKSHAFT	FAILED
3/20/2007	152	O235L2C		ENGINE

(CAN) ON THE WAY BACK TO THE AIRPORT THE ENGINE DEVELOPED ABNORMAL VIBRATIONS AND THE PILOT DECIDED TO CLIMB TO 2,400 FT, THEN THE ENGINE SUDDENLY STOPPED. THE PILOT DECIDED TO FORCE LAND ON THE AUTO ROUTE IN A WESTERLY DIRECTION. AFTER INSPECTION, IT WAS DETERMINED THAT THERE WAS NO LOSS OF OIL AND THAT THE PROP WAS UNABLE TO TURN. THE ENGINE CRANKSHAFT WAS THE CAUSE OF FAILURE. (TC NR 20070530003)

CA070316004	CESSNA	LYC	CARBURETOR	OUT OF ADJUST
2/12/2007	152	O235L2C		ENGINE

(CAN) ENGINE WAS RUNNING ROUGH, UNABLE TO ADJUST IDLE ON CARBURETOR. ENGINE WANTED TO SHUTDOWN ON APPROACH WHEN THROTTLE WAS RETARDED. (TC NR 20070316004)

2007FA0000459	CESSNA	CONT	BRACKET	BROKEN
4/4/2007	172F	O300*	04140161532	RUDDER CONTROL

DURING ANNUAL INSPECTION BRACKET (PN 04140616-1-532). FOUND BROKEN AND CRACKED IN OTHER LOCATIONS. LOCATED UNDER FLOOR CENTER SECTION AT FLIGHT CONTROL BELL CRACK. REPLACED WITH NEW PART. REQUEST INSPECTORS CHECK THIS AREA OF THE FLIGHT CONTROLS CAREFULLY DURING 100/ANNUAL

INSPECTION. (K)

CA070507013	CESSNA	LYC	BENDIX	ROTOR	FAILED
4/12/2007	172K	O320E2D	S4LN20		MAGNETO

(CAN) PILOT OF AC ON FLOATS DETECTED A DEAD MAGNETO ON HIS PRE-TAKEOFF INSPECTION, AND RETURNED TO THE DOCK. (TC NR 20070507013)

2007FA0000452	CESSNA	LYC	PISTON	FAILED
12/12/2006	172M	O320*	IU478003	AIR PUMP

INSTALLED A PISTON AIR PUMP (PN IU478-003, SER NR T568A) ON AUG 25, 2005. THE PUMP DRIVE COUPLING FAILED BY 12/06 WITH LESS THAN 66 HOURS ON IT. COUPLING FAILED INTERNALLY IN PUMP, WITH PLASTIC/SILICON DEBRIS IN ENG/DRIVE INTERFACE. (K)

CA070313005	CESSNA	LYC	SUPPORT	CRACKED
3/12/2007	172M	O320E2D	05521335	LANDING LIGHT

(CAN) THE SUPPORT WAS CRACKING AT THE MOUNTING FLANGE BEND RADII AT THE (4) AND (8) O`CLOCK POSITIONS. THE CRACKS HAD PREVIOUSLY BEEN STOPDRILLED BUT HAD CONTINUED PAST THE STOPDRILLING. SUSPECT THAT CRACKING STARTS AT SHARP/ROUGH ALUMINUM EDGES AND IS AGGRAVATED BY THE PROPELLER'S PROXIMITY CAUSING PULSATION AGAINST THE LIGHT. (TC NR 20070313005)

CA070517005	CESSNA	LYC	COIL	BURNED
12/3/2006	172M	O320E2D		MAGNETO

(CAN) RT MAGNETO DEAD ON RUN-UP. (TC NR 20070517005)

CA070517006	CESSNA	LYC	ENGINE	SMOKE
11/25/2006	172M	O320E2D		

(CAN) SMOKE SEEN COMING FROM COWLS INDUCTION FIRE SUSPECTED, SHUTDOWN AND PILOT DISCHARGED FIRE EXTINGUISHER INTO COWLING. (TC NR 20070517006)

CA070514009	CESSNA	LYC	GEAR	IMPROPER PART
4/26/2007	172N	O320H2AD		STARTER

(CAN) THE GEARS ON THE STARTER DID NOT MESH WITH THE RING GEAR FROM THE ENGINE CAUSING THE TEETH TO RIDE UP AND HIT THE TOP OF THE OPPOSITE GEAR. THIS CAUSED THE ENGINE AND STARTER TO LOCK UP. (TC NR 20070514009)

CA070517001	CESSNA	LYC	ADAPTER	CRACKED
5/15/2007	172N	O360A4A	77853	ENGINE

(CAN) DURING GROUND RUN AFTER OVERHAUL, AN OIL LEAK WAS NOTICED ORIGINATING FROM THE LOWER RT ATTACH POINT OF THE OIL FILTER ADAPTER. UPON CLOSE VISUAL INSPECTION A CRACK WAS FOUND IN THE RADIUS OF THE LOWER RT FLANGE. UNIT WAS REPLACED AND LEAK CHECKED. (TC NR 20070517001)

CA070517002	CESSNA	LYC	ENGINE	FAILED
4/18/2007	172P	O320D2J	O320D2J	

(CAN) INTERMITTENT VIBRATION AFTER UNUSUAL FLIGHT ATTITUDES DURING TRAINING. (TC NR 20070517002)

2007FA0000481	CESSNA	LYC	SPAR	DAMAGED
5/23/2007	172RG	O360F1A6	051212497	FUSELAGE

FOUND SMOKING RIVETS ON TOP OF FUSELAGE IN AREA OF THE REAR CENTER SECTION SPAR. REMOVED RIVETS (APPROX. EIGHT ON EACH END OF SPAR) AND FOUND RIVET HOLES SEVERELY ELONGATED. FACTORY ORIGINAL RIVETS WERE .1250 INCH DIA. AND SEVERAL HAD BEEN REPLACED IN THE FIELD WITH .1562 INCH RIVETS. ALL OF THE AFFECTED RIVET HOLES HAD BECOME OVERSIZED TO AN EXTENT THAT RENDERED THE SPAR AND OVERLAPPING FUSELAGE SKINS UNSERVICEABLE.

CA070522003	CESSNA	CONT	CONT	CAMSHAFT	SPALLED
5/7/2007	180K	O520*	IO520	653058	ENGINE

(CAN) IN REMOVING NR 1 CYLINDER TO BE CHANGED OUT THE LIFTERS WERE REMOVED TO BE BLEED DOWN, LIFTERS WERE SPAWLED. THE AME INSPECTED THE CAM AND THE EXHAUST LOBE WAS ALSO SPALLED. THE ENGINE WAS REMOVED AND PREPARED FOR SHIPMENT TO A REPAIR SHOP. UNDER FURTHER INVESTIGATION WE FOUND OTHER LOBES AND LIFTERS WITH SPALLING. OUR HYPOTHESIS IS LACK OF ENGINE USE CAUSING INTERNAL CORROSION/RUST WICH LEAD TO FAILURE (TC NRIN 20070522003)

2007FA0000491	CESSNA	LYC	SERVO	BINDING
4/29/2007	182S	IO540*	065001790100	AILEONS

PILOT/OWNER REPORTED TO MX THAT ON APPROACH AFTER DISENGAGING AUTOPILOT, AILERONS WERE DIFFICULT TO MOVE. NO WINDS AND STABLE APPROACH MINIMIZED PROBLEM. MX NOTED AILERONS WERE EXTREMELY DIFFICULT TO MOVE, AND FURTHER MOVEMENT COULD HAVE CAUSED EVEN GREATER DIFFICULTY OR COMPLETE IMMOBILIZATION OF THE AILERONS. AILERON SERVO WAS REMOVED AND SENT OUT FOR EXCHANGE. IT WAS NOTED ON REMOVAL THE OUTPUT SHAFT SUPPORT BEARING WAS LOOSE AND BINDING.

2007FA0000492	CESSNA	LYC	BELLCRANK	BROKEN
5/31/2007	182S	IO540*	07620382	TE FLAPS

DURING ANNUAL INSPECTION, IT WAS NOTED THAT THE (BELLCRANK ASSY) ON THE FLAP FEEDBACK LEVER, BEHIND THE INSTRUMENT PANEL, WAS BROKEN IN TWO, IT CONSIST OF A PLASTIC BLOCK WITH A SLOT IN IT WHICH MOVES THE MICROSWITCH ASSY TO ACTIVATE, OR DEACTIVATE THE FLAP DRIVE MOTOR. THE BLOCK IS ATTACHED WITH 2 RIVETS OF SOME TYPE. THE END OF THE BLOCK IS CRACKED COMPLETELY THROUGH ALLOWING SEPARATION OF THE UPPER AND LOWER HALVES. THIS ALSO STRESSED THE ATTACHING RIVETS CAUSING CRACKS, AND EXCESSIVE MOVEMENT. (PICS ARE AVAILABLE) IF PART COMPLETELY FAILED IT COULD ALLOW COMPLETE UNCOMMANDED FLAP DEPLOYMENT OR INABILITY TO RETRACT FLAPS, SUCH AS A BALKED LANDING.

2007FA0000451	CESSNA	LYC	CYLINDER	SCRATCHED
3/28/2007	206H	TIO540AJ1A	LW19279	ENGINE

SET OF 6 CYLINDERS CAME IN WITH 2 BROKEN CONTROL RINGS. CYLINDERS HAD RING STEPS ON TOP AND BOTTOM OF CYLINDER BARRELS. CORROSION WAS PRESENT IN BARRELS FROM THE MIDDLE UP TO THE HEAD OF THE CYLINDERS. EXHAUST GUIDES WERE FAR OUT OF LIMITS AND DIFFICULT TO REMOVE RESULTING IN HAVING TO OVERSIZE 3 BOSSES TO P05 GUIDES AND THE OTHER 3 TO P10. 2 EXHAUST SEATS FELL OUT DURING THE HEAT SOAK FOR INSTALLING THE EXHAUST GUIDES. BROKEN RINGS DAMAGED 2 PISTONS WHICH HAD TO BE REMOVED FROM SERVICE. 4 OTHER PISTONS WERE DAMAGED IN THE PISTON PIN BOSSES. THE BROKEN RINGS ALSO CAUSED MODERATE SCRATCHING TO THE BARREL OF THE CYLINDERS WHICH WAS REMOVABLE BY POWER HONING. 2 CYLINDERS HAD TO BE OVERSIZED FROM THE CORROSION AND SCRATCHING DAMAGE. THIS ENGINE HAD 1023 HOURS SINCE NEW. THE OWNER BOUGHT THE PLANE WITH 531 HOURS ON IT. HE NOTED THAT AT THE TIME OF THE INCIDENT THAT THERE WAS OIL CONSUMPTION OF 1 QUART PER HOUR ON THE ENGINE AND OIL COVERED THE BELLY OF THE AIRCRAFT. HE NOTED OIL LEAKING FROM THE BREATHER LINE.

CA070320007	CESSNA	CONT	TUBE	CRACKED
3/16/2007	207	IO520F	7008006	TIRE

(CAN) MAINTENANCE WAS DISPATCHED AND THE WHEEL ASSEMBLY WAS REPLACED UPON INSPECTION, VALVE STEM FOUND CRACKED DUE TO EXTREME COLD. (TC NR 20070320007)

2007FA0000443	CESSNA		ROD	FAILED
5/25/2007	208			PROPELLER

RECEIVED PROPELLER FOR OVERHAUL. DURING PREFUNCTION TEST FOUND BLADE NR 1 WAS NOT LINKED TO THE PITCH CHANGE ROD. AFTER DISASSEMBLY OF PROPELLER FOUND NR 1 BLADE ACTUATING PIN PN B5072-1 DISCONNECTED FROM BLADE. ACTUATING PIN ATTACHMENT SCREWS WERE SAFETIED AND HAD ANTISABOTAGE ON THE SCREW HEADS. THE THREADS HAD BEEN PULLED OUT OF THE BLADE. THERE WAS NO OBVIOUS SIGNS OF SUDDEN STOPPAGE OR A STRIKE. ALL BLADES SHOWED SIMILAR EROSION FROM ROCK DAMAGE. BLADE TRACK WAS .0625 INCH PLUS OR MINUS AND DIAMETER WAS 106 INCHES.IAW THE RECORD, THIS WAS THE FIRST

OVERHAUL EVENT. MANUFACTURE HAS REQUESTED BLADE, ACTUATING PIN AND LINK BE RETURNED TO THEM FOR EVALUATION.

CA070321006	CESSNA	PWA	LATCH	LOOSE
3/20/2007	208	PT6A114	S32471	LT NACELLE

(CAN) LT ENGINE UPPER COWL OPENED IN FLIGHT. AIRCRAFT LANDED WITHOUT INCIDENT. AIRCRAFT WAS FLYING THROUGH TURBULENCE WHEN THE COWL OPENED. DURING THE INSPECTION OF THE COWL, IT WAS FOUND THAT ALL 3 LATCHES WERE LOOSE. THE LATCHES WERE RE-ADJUSTED. (TC NR 20070321006)

CA070320002	CESSNA	PWA	STUD	LOOSE
3/17/2007	208B	PT6A114A	3038589	FUEL NOZZLE

(CAN) DURING FIRST FUEL NOZZLE INSPECTION FROM OVERHAUL -9 OF 28 FUEL NOZZLE STUDS WERE REMOVED WITH NUTS ON STUDS P/N 3038589. HAVE A CODE H19 STAMPED ON THE END -DURING A PHONE CONVERSATION WITH AN EMPLOYEE AT MFG, THEY INDICATED THAT OVERSIZED STUDS WERE PROBABLY NOT USED AT THE OVERHAUL. MFG ACKNOWLEDGED THE PROBLEM, AND ARE INTERNALLY LOOKING INTO IT, AND PROVIDING THE PROPER HARDWARE TO BE INSTALLED. (TC NR 20070320002)

CA070514057	CESSNA	PWA	BLADE	DAMAGED
1/13/2007	208B	PT6A114A		COMPRESSOR

(CAN) DURING DESCENT ENGINE OIL PRESSURE REDUCED ACCOMPANIED BY AN INCREASE IN INTER-TURBINE TEMPERATURE. ENGINE POWER WAS REDUCED AND A LANDING ACCOMPLISHED AT LOW POWER. SUBSEQUENT INSPECTION REVEALED COMPRESSOR TURBINE BLADE DAMAGE. MFG WILL MONITOR INVESTIGATION AND ADVISE OF ROOT CAUSE ONCE ESTABLISHED. (TC NR 20070514057)

CA070514018	CESSNA	PWA	GEARBOX	MAKING METAL
3/9/2007	208B	PT6A114A		ENGINE

(CAN) DURING CRUISE THE ENGINE EXPERIENCED AN UNCOMMANDED POWER REDUCTION ACCOMPANIED BY A NOISE AND SMOKE IN THE CABIN AIR. SUBSEQUENT INSPECTION REVEALED OIL AT THE ENGINE INLET AND METALLIC DEBRIS ON THE REDUCTION GEARBOX CHIP DETECTOR. MFG WILL MONITOR INVESTIGATION OF THE EVENT AND WILL ADVISE OF ROOT CAUSE ONCE DETERMINED. (TC NR 20070514018)

CA070514028	CESSNA	PWA	TURBINE BLADES	DAMAGED
3/22/2007	208B	PT6A114A		ENGINE

(CAN) ON ENGINE SHUTDOWN FLAMES WERE SEEN EXITING THE EXHAUST. SUBSEQUENT INSPECTION REVEALED DAMAGED COMPRESSOR TURBINE BLADES. MFG WILL INVESTIGATE THE EVENT AND ADVISE OF ROOT CAUSE ONCE ESTABLISHED. (TC NR 20070514028)

CA070507009	CESSNA	PWA	RELIEF VALVE	MALFUNCTIONED
5/3/2007	208B	PT6A114A	3020958	ENGINE OIL

(CAN) IN CRUISE FLIGHT, OIL PRESSURE BEGAN TO FLUCTUATE FROM BOTTOM TO MIDDLE OF GREEN RANGE, 80 TO 90 PSI. FAULT CONFIRMED ON GROUND RUN, NOT RELATED TO INDICATION. CONSULTATION WITH ENGINE OVERHAULER, OIL PRV VALVE TO BE CHECKED. PARTS AT TOOLS DISPATCHED, THIS REPORT OPEN. (TC NR 20070507009)

2007FA0000497	CESSNA	CONT	CYLINDER	DAMAGED
6/7/2007	210C	IO470S	EC646144CN	ENGING

CYLINDER HEAD DETACHED FROM CYLINDER BARREL CAUSING INJECTOR FUEL LINE TO RUPTURE. A INFLIGHT FIRE OCCURED CAUSING DAMAGE TO WIREING, MAG.,AND OTHE ENGINE COMPONENTS.

2007FA0000455	CESSNA	CONT	GEARBOX	DAMAGED
5/5/2007	340A	TSIO520*	08940002	MLG

GEAR MOTOR, REDUCTION GEAR BOX AND GEAR TRANSMISSION WERE REMOVED AND SENT OUT TO FOR INSPECTION. WHEN THEY OPENED GEAR REDUCTION BOX, THEY DISCOVERED THAT ONE OF THE MOUNTING BOLTS HAVE BEEN OF THE IMPROPER LENGTH CAUSING THE THREAD PATTERN. TBOLT SHOWS SLIGHT WEAR

WHERE IT TOUCHED THE GEAR SYSTEM. ACCORDING TO MFG THERE WAS ONLY A SLIGHT TRANSFER TO GEAR, WHICH THEY FEEL WOULD NOT HAVE CAUSED A PROBLEM. CANNOT DETERMINE HOW LONG THIS CONDITION EXISTED. THE BOLTS LOOK TO BE OLD AND THE INTERNAL GEAR BOX SEEMS ALSO TO BE OLD. THE INSTALLATION CALLED FOR A .8750 INCH BOLT FOR THIS MOUNTING HOLE, AND REMOVED A 1 INCH BOLT. THE CORRECTIVE ACTION IS TO INSTALL THE REPAIRED GEAR BOX AND THE CORRECT MOUNTING HARDWARE. (K)

2007FA0000466	CESSNA	CONT	LIGHT	FIRE
2/1/2007	340A	TSIO520*		COMPASS

COMPASS LIGHT/SOCKET OVERHEATED DURING TAXI AND CAUGHT FIRE BEFORE THE CIRCUIT BREAKER TRIPPED. PILOT EXTINGUISHED FIRE WITH HANDKERCHIEF. CAUSE UNKNOWN, NO DAMAGE TO AIRCRAFT INTERIOR OR STRUCTURE. (K)

CA070507007	CESSNA	CONT	ADAPTER	FAILED
5/4/2007	402C	TSIO520VB	642085A4	NR 1 STARTER

(CAN) UNABLE TO ROTATE ENGINE DURING WALKAROUND INSPECTION PRIOR TO ENGINE START. FAULT ISOLATED TO STARTER ADAPTER ASSY. STARTER ADAPTER FAILED ONLY 9.6 HRS IN SERVICE AFTER OVERHAUL. OVERHAUL FACILITY CONTACTED. UNIT TO BE SHIPPED TO FACILITY FOR TEARDOWN INSPECTION. STARTER ADAPTER REPLACED. (TC NR 20070507007)

CA070514024	CESSNA	CONT	CONT	EXHAUST VALVE	FAILED
5/14/2007	421B	GTSIO520H	639056	637781	ENGINE

(CAN) EXHAUST VALVE HEAD SEPARATED, STRIKING THE INTAKE VALVE AND CAUSING THE INTAKE VALVE TO FAIL. THE HEAD OF THE EXHAUST VALVE LODGED INTO THE EXHAUST PORT. THE INTAKE VALVE HAD (2) PIECES SEPARATE AND ONE LODGED ITSELF INTO THE TOP OF THE NR 1 CYLINDER HEAD, THE OTHER PORTION MIGRATED TO AN ADJACENT CYLINDER. ALL CYLINDERS WILL BE REMOVED AS COMPRESSION IS LOW ON ALL. (TC NR 20070514024)

2007FA0000498	CESSNA	WINDSHIELD	BROKEN
5/27/2007	421C		COCKPIT

MAJOR PORTION OF RT WINDSHIELD SEPARATED FROM AIRCRAFT.

0089756	CESSNA	BLADE	CORRODED
2/3/2006	425	94LMA4	PROPELLER

CORROSION IN BLADE SHANK, NOT REPAIRABLE.

CA070514005	CESSNA	PWA	UNKNOWN	SMOKE
2/28/2007	500CESSNA	JT15D1A		CABIN

(CAN) SMOKE WAS OBSERVED IN THE CABIN AIR FOLLOWING TAKE-OFF. OXYGEN MASKS WERE DEPLOYED AND AN EMERGENCY DECLARED. THE AIRCRAFT DIVERTED TO POINT OF DEPARTURE. MFG WILL INVESTIGATE THE EVENT AND ADVISE OF ROOT CAUSE ONCE ESTABLISHED. (TC NR 20070514005)

CA070427004	CESSNA	WILINT	STARTER GEN	FAILED
4/23/2007	525	FJ44	99121252	ENGINE

(CAN) GENERATOR OUTPUT FAILURE, NO OUTPUT. (TC NR 20070427004)

2007FA0000494	CESSNA	CABLE	FRAYED
6/4/2007	550	6565001197	AUTOPILOT

WE HAVE FOUND THE ELEVATOR CABLE AT THIS SERVO P/N 4006719-904 SHOWING EXCESSIVE WEAR ON AIRCRAFT UNDERGOING PHASE 1-4 AND ALSO PHASE 5 INSPECTIONS. THE CABLE WAS FOUND WHERE IT PASSES THROUGH AT FS. 428.50 AND IS DIFFICULT TO SEE. THIS CABLE HAD APROX. 3 STRANDS TO GO TO TOTAL FALURE. THE IPC REFERENCE FOR THE CABLE IS 22-10-00, FIGURE 1, PAGE 3, ITEM 85

B3OR2007138	CESSNA	PWA	ACTUATOR	BINDING
5/18/2007	550	JT15D4	556545098	ELEVATOR TRIM

FOLLOWING INSTALLATION OF A NEWLY OVERHAULED ELEVATOR TRIM TAB ACTUATOR, PARTIAL BINDING OF THE ACTUATOR OCCURRED. FURTHER INVESTIGATION REVEALED THAT THIS ACTUATOR HAD EXCESSIVELY WORN END BEARINGS ALLOWING LATERAL PLAY IN INTERNAL JACKSCREWS SUFFICIENT TO CAUSE BINDING ONCE INSTALLED. ALSO DISCOVERED THAT THE LUBRICANT IN THIS ASSEMBLY WAS GREY IN COLOR, WHICH IS CONTRARY TO THE LOW MOISTURE CONTENT GREASE (PINK OR WHITE IN COLOR) STRICTLY SPECIFIED IN THE COMPONENT MM. THIS ASSEMBLY WAS RECENTLY OVERHAULED UNDER WO NR 1059 ON 3/20/2007.

B3OR2007131	CESSNA	PWA	ACTUATOR	BINDING
5/11/2007	550	JT15D4	556545092	ZONE 300

A NEWLY OVERHAULED ELEVATOR TRIM TAB ACTUATOR WAS BINDING AND WOULD NOT PROVIDE ADEQUATE DEFLECTION AT THE TRIM TAB ONCE INSTALLED. FURTHER INVESTIGATION REVEALED THAT THIS ACTUATOR HAD EXCESSIVE PLAY AT THE END BEARINGS AND THAT THE PRIMARY SPROCKET PN WAS INCORRECT RELATIVE TO THE ASSEMBLY PN. THIS ASSEMBLY WAS OVERHAULED UNDER WORK ORDER NR 15356 ON 4/2/2002. THE ITEM WAS RETURNED TO THE OVERHAULING AGENCY FOR WARRANTY REPAIR.

CA070405001	CESSNA	PWA	BEARING	CORRODED
4/4/2007	550	JT15D4	LA7139A	THRUST REVERSER

(CAN) WATER INFILTRATED BETWEEN SLEEVE P/N LA7140 AND BEARING P/N LA7139A CAUSING PIN HOLE CORROSION IN THE BEARING JACKET, ALLOWING WATER TO COME IN CONTACT WITH THE DRIVER LINK P/N 202-0007-3 PIVOT POINT CORRODING IT BEYOND REPAIR. (TC NR 20070405001)

CA070328002	CESSNA	PWA	DUCT	DEBONDED
3/12/2007	550	JT15D4	651510314	CABIN AIR SYS

(CAN) COMPANY CAMPAIGN NOTICE 851-21-20-034 WAS CARRIED OUT. INSPECTION FOUND THE CLAMP PORTION OF THE BLEED AIR WELD ASSEMBLY LOOSE. THE WELD ASSEMBLY WAS REPAIRED BY COLD BONDING IAW INSTRUCTIONS RECEIVED FROM MFG CUSTOMER SUPPORT. UNIT RETURNED TO SERVICE. (TC NR 20070328002)

2007FA0000474	CESSNA	PWA	IGNITION LEAD	OUT OF POSITION
5/7/2007	560CESSNA	JT15D5		LT ENGINE

WHILE DEPARTING, ENCOUNTERED A 75 PERCENT THROTTLE SPLIT WITH THE LEFT ENGINE ACHIEVING ONLY 93 PERCENT N1. A MFG PHASE B INSPECTION WAS PERFORMED ON THE AIRCRAFT ON 5/5/2007. WHILE PERFORMING THE PHASE B INSPECTION ITEM B742001, TASK 74-31-00-210 (ENGINE IGNITERS OPERATIONAL TEST), IT WAS DETERMINED THAT THE RT IGNITER LEAD ON THE LT ENGINE WAS RE-INSTALLED IN A POSITION THAT AFFECTED THE THROTTLE LINKAGE AND PREVENTED FULL TRAVEL OF THROTTLE LEVER IN THE FLIGHT DECK. FURTHER INVESTIGATION REVEALED THAT THERE IS NO REFERENCE OR PRECAUTIONS IN THE MM AS TO THE RE-INSTALLATION POSITION OF THE LEAD UPON REMOVAL AND RE-INSTALLATION OF THE IGNITER PLUG. INSTALLING THE IGNITER LEAD END TO THE IGNITER WITH A 90 DEGREE DIFFERENCE, HAS SHOWN TO AFFECT AND INTERFERE WITH THE THROTTLE LINKAGE TRAVEL. A PRECAUTIONARY NOTE OR AN ADDITIONAL TASK SHOULD BE INCORPORATED IN THEM TASK 74-31-00-211 FOR POWER LEVER TRAVEL INSPECTION/ MOVEMENT CHECK UPON COMPLETION OF THIS TACK. A RECOMMENDED CHANGE/ REQUEST IS BEING SUBMITTED TO MFG FOR THIS CRITICAL UPDATE/REVISION. (K)

CA070514016	CESSNA	PWA	FUEL CONTROL	FAULTY
3/14/2007	560CESSNA	PW535A	8197354	ENGINE

(CAN) DURING DESCENT, THE ENGINE WAS FOUND NOT TO RESPOND TO THROTTLE INPUT, ACCOMPANIED BY A FUEL BOOST PRESSURE WARNING INDICTATION. THE ENGINE WAS SHUTDOWN IN FLIGHT. SUBSEQUENT INSPECTION REVEALED A FAULTY MECHANICAL FUEL CONTROL UNIT. (TC NR 20070514016)

CA070314012	CESSNA	PWC	ENGINE	OIL CONSUMPTION
2/13/2007	560CESSNA	PW545B	PW545B	

(CAN) THE ENGINE LOW-OIL-PRESSURE WARNING ACTIVATED IN FLIGHT. SUBSEQUENT INVESTIGATION REVEALED HIGH OIL CONSUMPTION. MFG WILL INVESTIGATE THE EVENT AND ADVISE OF ROOT CAUSE ONCE ESTABLISHED. (TC NR 20070314012)

CA070514013	CESSNA	PWA	ENGINE	LOW PRESSURE

3/9/2007	560XL	PW545A			

(CAN) THE ENGINE EXPERIENCED AN LOSS OF OIL PRESSURE DURING CRUISE AND WAS REMOVED FROM SERVICE FOR FURTHER INVESTIGATION. MFG WILL INVESTIGATE AND ADVISE OF ROOT CAUSE ONCE ESTABLISHED. (TC NR 20070514013)

CA070514003	CESSNA	PWA		SEAL	LEAKING
3/1/2007	560XL	PW545A			ENGINE OIL SYS

(CAN) ENGINE OIL PRESSURE WAS SEEN TO FLUCTUATE IN CLIMB AND DURING CRUISE THE LOW OIL PRESSURE WARNING ACTIVATED. THE ENGINE WAS SHUTDOWN IN FLIGHT. SUBSEQUENT INSPECTION REVEALED A LEAKING ACCESSORY GEARBOX LIP SEAL. (TC NR 20070514003)

CA070514021	CESSNA	PWA		ENGINE	LOW PRESSURE
3/18/2007	560XL	PW545A			

(CAN) THE ENGINE EXPERIENCED AN INCREASE IN OIL PRESSURE AND TEMPERATURE AND WAS SHUTDOWN IN FLIGHT. SUBSEQUENT INSPECTION REVEALED METALLIC DEBRIS IN THE ENGINE OIL. MFG WILL INVESTIGATE THE EVENT AND WILL ADVISE OF ROOT CAUSE ONCE ESTABLISHED. (TC NR 20070514021)

CA070528003	CESSNA	CONT	MCAULY	HUB	CRACKED
3/19/2007	A185E	IO520D	D2A34C58	4716	PROPELLER

(CAN) PROPELLER RECEIVED FOR OVERHAUL AT 10 YEARS CALENDAR TIME, FOUND HUB THREADS CRACKED, FOUND ONE BLADE THREAD CRACKED, FOUND ONE BLADE RETENTION NUT CRACKED. FAA AD 91-15-04 APPLIED TO THIS PROPELLER FOR INITIAL INSPECTION AND MODIFICATION WHICH HAD BEEN ACCOMPLISHED (TC NR 20070528003)

CA070528006	CESSNA	CONT	MCAULY	BLADE	CRACKED
3/1/2007	A185E	IO520D	D2A34C58	S90AT4	PROPELLER

(CAN) PROPELLER RECEIVED FOR OVERHAUL AT 10 YEARS CALENDAR TIME, AT THAT TIME THE PROPELLER HAD BEEN INSPECTED PER AIRWORTHINESS MANUAL PART VI APPENDIX C (4). THE LAST OVERHAUL COMPLETED WAS OCTOBER 1991. FOUND BOTH BLADE THREADS CRACKED. FAA AD 91-15-04 APPLIED TO THIS PROPELLER FOR INITIAL INSPECTION AND MODIFICATION WHICH HAD BEEN ACCOMPLISHED. (TC NR 20070528006)

CA070515005	CESSNA	CONT		HUB	CRACKED
5/3/2007	A185F	IO520*		D2A34C580	PROPELLER

(CAN) EDDY CURRENT DETECTED INDICATION BEYOND ALLOWABLE LIMITS ON HUB SOCKET NR 1, 2 TO 3 THREADS DOWN. (TC NR 20070515005)

CA070528005	CESSNA	CONT	MCAULY	HUB	CRACKED
3/19/2007	A185F	IO520D	D2A34C58	4716	PROPELLER

(CAN) PROPELLER RECEIVED FOR OVERHAUL AT 10 YEARS CALENDAR TIME, AT THAT TIME THE PROPELLER HAD BEEN INSPECTED IAW AIRWORTHINESS MANUAL PART VI APPENDIX C (4). THE LAST OVERHAUL COMPLETED WAS JUNE 1987. THE PROPELLER HAD EXCEEDED THE MFG HARD TIME OF 1,500 HOURS BETWEEN OVERHAULS. FOUND HUB THREADS CRACKED. FAA AD 91-15-04 APPLIED TO THIS PROPELLER FOR INITIAL INSPECTION AND MODIFICATION WHICH HAD BEEN ACCOMPLISHED. (TC NR 20070528005)

CA070529006	CESSNA	CONT	CONT	CONNECTING ROD	DESTROYED
5/7/2007	A185F	IO520D	IO520D	646778	ENGINE

(CAN) DURING FLIGHT, THE ENGINE BEGAN TO RUN ROUGH. THE AIRCRAFT MADE AN UNSHEDULED LANDING FOR INSPECTION. THE CRANKCASE WAS FOUND CRACKED AT THE NR 2 CYLINDER. THE ENGINE WAS REMOVED FROM THE AIRCRAFT. (TC NR 20070529006)

2006FA0001056	CESSNA	LYC		PIN	BROKEN
10/22/2006	R182	O540*			ACTUATOR

LOCKDOWN PINS BROKE AT GROOVE FOR ROLL PINS. THIS ALLOWED THE PINS TO MOVE OUT OF ACTUATOR BEARING END AND JAM THE ACTUATOR. IN THE UNLOCKED POSITION, SEB95-20 ACTUATOR DOWNLOCK PIN. INSPECTION SAYS TO CHECK FOR LOOSE PINS. THESE PINS WERE NOT LOOSE IN THE END BEARING UNTIL THE PART WAS THOROUGHLY CLEANED. THERE ARE INDICATIONS THAT THE PINS WERE MOVING BUT COULD NOT BE MOVED. THE NEW ASSEMBLIES USE A PIN THROUGH THE PINS INSTEAD OF A GROVE CUT IN THE CIRCUMFERENCE OF THE LOCKDOWN PIN. SUGGEST THAT ANY ACTUATORS THAT ARE STILL OUT THERE BE REMOVED AND CLEANED TO DETERMINE THAT THE PINS ARE BROKEN OR LOOSE. (K)

RUAGACC61007	CESSNA	CONT	SPRING	FAILED
6/10/2007	T188C	TSIO520*	16410077	LT MLG

AIRCRAFT ACCIDENT. LT MLG (SPRING) FAILED DURING TAKEOFF ATTEMPT, APPROXIMATELY 6 INCHES ABOVE AXLE. NO EVIDENCE OF PREVIOUS FRACTURE (CRACK) COULD BE DETECTED. LT WING BUCKLED AND AIRCRAFT NOSED OVER. SUBSTANTIAL DAMAGE, NO INJURIES.

CA070511008	CESSNA	CONT	CONT	CRANKCASE	CRACKED
5/2/2007	T303	TSIO520AE	TSIO520AE3B		ENGINE

(CAN) SUDDEN DROP OF OIL PRESSURE DURING FLIGHT TO THE BOTTOM OF THE GREEN ON OIL PRESSURE GAUGE. CONTINUED FLIGHT WITH SAFE LANDING. CRACK NOT FOUND BY NDT. BOTTOM END REBEARINGED, BUT ENGINE OIL PRESSURE WOULD DROP ONCE WARMED UP (POST REPAIR). FURTHER NDT BY RTD QUALITY SERVICES FOUND POSITIVE CRACK INDICATION AT ROOF OF OIL PICKUP PASSAGE WHERE THE OIL PICKUP TUBE CONNECTS TO THE SOCKET MACHINED INTO THE CRANKCASE. NDT TECHNICIAN MENTIONED A CASTING FLAW SEEMED TO BE THE CAUSE. RTD MDT REPORT SUBMITTED AS SUPPORTING DOCUMENTATION TO THIS SDR. (TC NR 20070511008)

2007FA0000534	CESSNA	HUB	FAILED
6/19/2007	U206F	D30257	WHEEL

WHEEL-BROKE AT CENTER, CASTING FAILED AT BOLT HOLES-8:00X6 TIRES AND TUBES 190-200" NRS AT CAP SCREWS INSTALLED 7-23-03 TACH 1709 CURRENT TACH 2052.

CA070327010	CESSNA	CONT	CONTROL CABLE	CUT
2/8/2007	U206F	IO550F	1260505406	ELEVATOR

(CAN) A SCREW FROM THE AVIONIC EQUIPMENT LOOSENED, FELL AND LODGED BETWEEN THE PULLEY AND CABLE FOR THE ELEVATOR FLIGHT CONTROL. WITH TIME, THE CABLE WAS DAMAGED AS IT ROLLED OVER THE SCREW. (TC NR 20070327010)

CA070327004	CESSNA	CONT	ALTERNATOR	FAILED
8/12/2006	U206G	IO520F	DOFF300JR	ENGINE

(CAN) BURNING ELECTRICAL SMELL IN COCKPIT, LOSS OF CHARGING SYSTEM. (TC NR20070327004)

2007FA0000454	CIRRUS	CONT	BRUSHES	WORN
5/1/2007	SR20	IO360ES		MAGNETO

THIS MAGNETO WAS MISFIRING, AND APPEARS TO HAVE CAUSED DETONATION IN THE NR 5 CYLINDER. PISTON MATERIAL WAS FOUND IN THE OIL FILTER AND OIL COOLER. ENGINE HAD TO BE REMOVED, INSPECTED, AND REPAIRED DUE TO THE DETONATION. THE MAGNETO WAS FOUND TO HAVE A SEVERELY WORN BRUSH (K3215), THE BRUSH BLOCK WAS MELTED (K3823), THE COIL WAS BURNED CLOSE TO THE BRUSH CONTACT POINT (K3975), AND THE POINTS WERE BADLY BURNED (M3081). THIS IS THE (3RD) OCCURRENCE FOUND WITH THIS SAME PROBLEM. (K)

2007FA0000477	CIRRUS	BUNGEE	MISRIGGED
5/7/2007	SR22		RUDDER

DURING INSPECTION FOUND RUDDER AILERON INTERCONNECT BUNGEE MISRIGGED AND INTERTFERING WITH THE AILERON CONTROLS. THERE IS NO EVIDENCE THAT THIS AIRCRAFT HAS HAD ANY MAINTENANCE TO THIS SYSTEM SINCE LEAVING THE FACTORY. ANOTHER AIRCRAFT WITH THIS CONDITION HAD THE CONTROL SYSTEM JAM WITH FULL OPPOSITE RUDDER AND AILERON. IT APPEARS THAT THIS CONDITION IS CAUSED BY IMPROPER

RIGGING OF THE INTERCONNECT SYSTEM AT THE FACTORY.

2007FA0000476	CIRRUS	CONT	AIR FILTER	DEBONDED
5/4/2007	SR22	IO550N	BA24	ENGINE INTAKE

APPEARS THAT THE FOAM AIR FILTER ELEMENT, THAT IS CYLINDER SHAPED AND BONDED TOGETHER, DID NOT HAVE SUFFICIENT GLUEUU OR CAME UNBONDED AND WAS ALLOWING UNFILTERED AIR TO ENTER THE ENGINE INTAKE.

2007FA0000516	CIRRUS	CONT	HINGE	CORRODED
6/12/2007	SR22	IO550N	13431004	FLAP

FLAP HINGE ASSEMBLY HAS INTERGRANULAR CORROSION ON THE FORWARD EDGE OF THE HINGE JUST BELOW THE BOTTOM WING SKIN ABOVE THE HINGE FAIRING.

2007FA0000517	CIRRUS	CONT	HINGE	CORRODED
6/12/2007	SR22	IO550N	13432002	FLAP

FLAP HINGE ASSEMBLY HAS INTERGRANULAR CORROSION ON THE FORWARD EDGE OF THE HINGE JUST BELOW THE BOTTOM WING SKIN ABOVE THE HINGE FAIRING.

CA070321012	CNDAIR	PWA	SKIN	CRACKED
3/21/2007	CL2151A10	CWASP		FS 388

(CAN) DURING A REGULAR SCHEDULED MAINTENANCE B-CHECK, THE MAINTENANCE GUIDE CHECKLIST CALLED FOR A VISUAL INSPECTION IN ZONE 330/340 FUSELAGE TO WING AREA, BS 388-434. A SMALL 1 INCH CRACK WAS FOUND STEMMING FROM UNDERNEATH THE SHEAR PLATE AT BS 388. AFTER REMOVAL OF THE PRC, PAINT STRIPPING, AND COMPLETING A LIQUID DYE PENETRANT INSPECTION, (2) CRACKS AT STA 388 BETWEEN WL216 AND WL210 WERE IDENTIFIED. ONE CRACK WAS APPROXIMATELY 3.5 INCH AND THE OTHER APPROXIMATELY 0.5 INCH. PICTURES AND INFORMATION SENT TO THE MFG FOR DIRECTION TO COMPLETE THIS REPAIR. (TC NR 20070321012)

CA070502003	CNDAIR		FUEL TANK	LEAKING
5/2/2007	CL2156B11215		K215T6400212	

(CAN) TESTED BEFORE INSTALLATION, THE NEW TANK HAS BEEN FOUND LEAKING BY ONE OF THE PROBE ATTACHMENT PATCH INSTALLATION. THE NEW TANK HAS BEEN REJECTED. (TC NR 20070502003)

CA070502001	CNDAIR		FUEL TANK	LEAKING
5/2/2007	CL2156B11215		K215T6400212	

(CAN) TESTED BEFORE INSTALLATION, THE NEW TANK HAS BEEN FOUND LEAKING BY ONE OF PROBE ATTACHMENT. THE PROBE ATTACHMENT NUT HAS BEEN REPLACED, RETIGHTENED AND TANK INSTALLED IN A/C. (TC NR 20070502001)

CA070525001	CNDAIR	PWA		ACTUATOR	FAILED
5/25/2007	CL2156B11215	PW123	2158500116	2158500116	LANDING GEAR

(CAN) THE NEWLY OVERHAULED ACTUATOR FAIL THE FUNCTIONAL CHECK AFTER INSTALLATION, IT DOESN'T STAY LOCKED WITH HYDRAULIC PRESSURE REMOVED. (TC NR 20070525001)

CA070523003	CNDAIR	PWA		UNKNOWN	CRACKED
5/23/2007	CL2156B11215	PW123	21564075		FUEL SYSTEM

(CAN) LEAK AT (3) LOWER CORNERS NEAR INTERCONNECTS. DROPS 9180 (TC NR 20070523003)

CA070523005	CNDAIR	PWA		FLUID	LEAKING
5/23/2007	CL2156B11215	PW123	215640022	215640022	FULE SYSTEM

(CAN) LEAK AT LOWER CORNERS NEAR INTERCONNECTS. (TC NR 20070523005)

CA070524004	CNDAIR	GE	SENSOR	CORRODED

5/23/2007	CL600*	CF34*	10100199	NR 1 BRAKE

(CAN) DURING CRUISE CREW RECEIVED BRAKE OVERHEAT WARNING , LT OUTER BTMS SHOWING INCREASING BRAKE TEMP UP TO 20 UNITS, THEN STARTED TO DECREASE. AIRCRAFT DESCENDED TO LOWER ALTITUDE AND SPEED SLOWED. BRAKE TEMP STARTED TO RISE TO 18 UNITS. GEAR EXTENDED, BRAKE TEMPS RETURNED TO NORMAL GREEN INDICATION. RETURNED TO ORIGINATING AIRPORT, NORMAL LANDING. MAINTENANCE FOUND NR 1 BRAKE TEMP SENSOR HAD CORRODED PINS. BRAKE TEMP SENSOR REPLACED. AIRCRAFT RETURNED TO SERVICE. (NOTE: PART IS AN EXPENDABLE AND SYSTEM DOES NOT TRACK COMPONENT TIME. TIMES PROVIDED ARE AIRCRAFT TOTAL TIME.) (TC NR 20070524004)

CA070427003	CNDAIR	GE	CONNECTOR	SHORTED
4/25/2007	CL600*	CF34*	B080201500398S	THRUST REVERSER

(CAN) ON GROUND, EICAS SHOWED (PROX SYS FAULT 2). MAINTENANCE INSPECTION FOUND PYLON CONNECTOR WITH INTERNAL SHORT, INDICATING FAILURE OF THRUST REV PROX SENSOR. CONNECTOR P/N B0802015-003-98SA (REF: WIRING MANUAL 71-50-01 J508) REPLACED, SYSTEM FUNCTION TEST NORMAL, AIRCRAFT RETURNED TO SERVICE (TC NR 20070427003)

CA070320010	CNDAIR	GE	RADOME	BURNED
3/14/2007	CL600*	CF34*	CL6002D15	FUSELAGE

(CAN) DURING CRUISE AIRCRAFT STRUCK BY LIGHTENING. MAINTENANCE INSPECTION FOUND SCORCH MARKS ON RADOME, ALONG CENTER EDGES OF NLG DOORS, AND ALONG FORWARD FUSELAGE UP TO WING ROOT FAIRINGS. ALSO MINOR BURN MARK ON RT WINGLET TIP. NO DAMAGE TO ANY STATIC DISCHARGE WICKS. ADF WILL NOT POINT, ADF LOOP ANTENNA REPLACED. FUSELAGE BURN MARKS REPAIRED IAW MFG INSTRUCTIONS. WINGLET DAMAGE ALLOWABLE AS IAW MFG REO. AIRCRAFT RETURNED TO SERVICE. (TC NR 20070320010)

CA070323003	CNDAIR	GE	CARBON SEAL	MISSING
3/21/2007	CL600*	CF34*	4115T43PO3	NR 1 ENGINE

(CAN) AFTER DEPARTURE AND CLIMBING THOUGH 16,000 FT, CREW RECEIVED (OIL LEVEL LOW) MESSAGE FOR NR 1 ENGINE. QUANTITY WAS 50 PERCENT AND DROPPING. AFTER DISCUSSION WITH MAINTENANCE ELECTED TO RETURN TO BASE. ANNOUNCED TO PASSENGERS THAT THEY WERE RETURNING DUE TO OIL QUANTITY INDICATION. JUST PAST THE OUTER MARKER CREW RECEIVED RED OIL LEVEL WARNING AND SHUTDOWN NR 1 ENGINE. NO EMERGENCY WAS DECLARED AS THEY WERE SO CLOSE TO LANDING AT THIS POINT. DID A FLAP 20 LANDING WITHOUT INCIDENT AND ADVISED PASSENGERS THAT THEY DID HAVE TO SHUTDOWN ENGINE DUE OIL LEVEL. NO ADVERSE PASSENGER REACTION. FDR READOUT WAS TAKEN AND NO HEAVY LANDING INSPECTION WAS REQUIRED. EARLIER THAT DAY THE NR 1 EDP HYDRAULIC PUMP HAD BEEN REPLACED TO CLEAR A PREVIOUS MEL WHERE THE PUMP HAD A BLANKING PLATE INSTALLED AND WAS DEFERRED TWO DAYS PREVIOUSLY. UPON REMOVAL OF THE PUMP IT WAS DISCOVERED BY MAINTENANCE THAT THE AGB CARBON SEAL WAS MISSING. WHEN THE BLANKING PLATE WAS REMOVED EARLIER THAT DAY THE CARBON SEAL WAS REMOVED ACCIDENTALLY AND NEVER RE-INSTALLED CAUSING THE LEAK AND IN-FLIGHT SHUTDOWN. THE CARBON SEAL WAS REPLACED AND GROUND RUNS AND LEAK CHECKS WERE CARRIED OUT AND THE AIRCRAFT WAS CHECKED SERVICEABLE. THE CURRENT A/C HOURS IS 5302:59 AND CYCLES ARE 2346. (TC NR 20070323003)

CA070322004	CNDAIR	GE	CONNECTOR	DAMAGED
3/21/2007	CL600*	CF348C1		THRUST REVERSER

(CAN) ENROUTE, CREW RECEIVED RED THRUST REVERSER ICON IN THEIR N1 GAUGE. AFTER DISCUSSIONS WITH MAINTENANCE AND DISPATCH, ELECTED TO DIVERT FOR MAINTENANCE TO LOCK OUT THE THRUST REVERSER. LANDED WITHOUT INCIDENT AND MAINTENANCE CARRIED OUT THE PROCEDURE. RT THRUST REVERSER LOCKED OUT. MEL 78-30-01 APPLIED WILL PROVIDE MORE INFORMATION WHEN IT BECOMES AVAILABLE CORRECTIVE ACTION, DATED 29 MARCH 2007: WITH THE SUPPORT OF MFG WE HAVE CONCLUDED THAT THE CAUSE OF THE INDICATION PROBLEMS IS RELATED TO A PYLON CONNECTOR THAT IS BEING CONTAMINATED WITH MOISTURE. THE IMMEDIATE SHORT TERM FIX IS TO APPLY A WATER RESISTANCE FILLER TO THE BACK OF THE CONNECTOR TO PREVENT WATER INGRESS. THE LONG TERM FIX IS TO REPLACE THE CONNECTOR WITH A NEW WATER TIGHT CONNECTOR. MFG IS WORKING WITH A COMPANY ON THE DESIGN OF THE NEW CONNECTOR AND ONCE AVAILABLE A REPLACEMENT PROGRAM WILL REMOVE ALL THE EXISTING CONNECTORS AND REPLACE WITH THE NEW CONNECTORS. (TC NR 20070322004)

CA070320005	CNDAIR	GE	THRUST	UNKNOWN

			REVERSER	
3/19/2007	CL600*	CF348C1		

(CAN) AFTER TAKEOFF AND CLIMBING THROUGH 25000 FEET, CREW RECEIVED RED THRUSTER REVERSER ICON IN THEIR N1 GAUGE. SHORTLY THEREAFTER CREW RECEIVED REVERSER STATUS MESSAGE. AFTER DISCUSSION WITH MTC, ELECTED TO RETURN TO DEPARTURE TO LOCK OUT THRUST REVERSER. THRUST REVERSER DEFERRED IAW MEL 78-30-01 WILL PROVIDE MORE INFORMATION WHEN IT BECOMES AVAILABLE. WITH THE SUPPORT OF MFG WE HAVE CONCLUDED THAT THE CAUSE OF THE INDICATION PROBLEMS IS RELATED TO A PYLON CONNECTOR THAT IS BEING CONTAMINATED WITH MOISTURE. THE IMMEDIATE SHORT TERM FIX IS TO APPLY A WATER RESISTANCE FILLER TO THE BACK OF THE CONNECTOR TO PREVENT WATER INGRESS. THE LONG TERM FIX IS TO REPLACE THE CONNECTOR WITH A NEW WATER TIGHT CONNECTOR. MFG IS WORKING WITH A COMPANY ON THE DESIGN OF THE NEW CONNECTOR AND ONCE AVAILABLE A REPLACEMENT PROGRAM WILL REMOVE ALL THE EXISTING CONNECTORS AND REPLACE WITH THE NEW CONNECTORS. (TC NR 20070320005)

CA070320003	CNDAIR		MANIFOLD	SPLIT
3/17/2007	CL6002B19		X8905	CABIN AIR

(CAN) A/C IS UNDERGOING MODIFICATION TO FREIGHTER CONFIGURATION,AND WAS BEING TEST FLOWN FOR COLLECTING CABIN VENTILATION SYSTEM PRESSURES, UNDER VARIOUS OPERATIONAL CONDITIONS.THE A/C WAS CONFIGURED FOR THE TEST; SPECIFICALLY (2) TEST PORTS WERE FITTED TO THE A/C VENTILATION SYSTEM DUCTING TO MEASURE DUCT PRESSURE IN FLIGHT. THE DUCT PRESSURES WERE MEASURED SUCCESSFULLY UNDER SEVERAL OPERATING CONDITIONS, BUT IT WAS NOTED THAT THE DISTRIBUTION MAIN FEED MANIFOLD WOULD NOT WITHSTAND THE PRESSURE FROM THE PACK FLOW, WITH MAX CLIMB POWER APPLIED. THE FLIGHT WAS CONCLUDED AND THE A/C RETURNED UNEVENTFULLY. UPON INSPECTION OF THE SYSTEM,THE THE MAINFEED MANIFOLD WAS FOUND TO HAVE A SPLIT AT ONE OF THE JOINTS. (TC NR 20070320003)

CA070315002	CNDAIR	GE	SOCKET	BURNED
3/13/2007	CL6002B19	CF343A1	BB100200258	CABIN LIGHTS

(CAN) REF LOG PAGE NR 593976. F/A REPORTS ELECTRICAL SMELL IN FORWARD CABIN, AROUND ROW 2 AND 3. 4FD SIDEWALL LIGHT HOLDER FOUND AT FAULT, CBP2 C/B S5 OPENED AND SECURED. SIDEWALL LIGHT INOP, DEFERRED IAW MEL 33-21-01 CAT (C). SOCKET ASSY P/N BB1-0020-02-58 (TC NR 20070315002)

CA070321005	CNDAIR	GE	WIRE	BURNED
2/28/2007	CL6002B19	CF343A1	PA204D8	COCKPIT

(CAN) AFTER LANDING ELECTRICAL SHORT/ARCING BEHIND CAPTAINS SEAT IN CIRCUIT BREAKER PANEL. SOME SMOKE OBSERVED. AC TAXIED CLEAR OF ACTIVE RUNWAY. SMOKE AND SPARKS STOPPED, AIRCRAFT TAXIED TO RAMP, PRIOR TO ARRIVAL AT GATE SPARKS RE-OCCURRED. AIRCRAFT STOPPED AND DEPLANED. MAINTENANCE INSPECTION FOUND BUSS FEEDER JUMPER WIRE DISCONNECTED AND HAD MADE CONTACT WITH BULKHEAD BEHIND CB PANEL. ARCING DAMAGE BURNED THROUGH STRINGER AND BULKHEAD SKIN. BULKHEAD BURN THROUGH APPROX 1 INCH BY .5 INCH . (2) FEEDER WIRES BURNED INSULATION. FEEDER WIRES PA204D8 AND PA204E8 REPLACED. WIRE PA204C8 CONNECTION FOUND LOOSE AT CB 1-H2, ALL SCREWS ON BUS BAR H FROM H2 TO H13 FOUND NOT TIGHT. SB601R-34-096 (PROVISIONAL GPS INSTALLATION) AND SB601R-34-116 (EGWPS) HAD RECENTLY BEEN ACCOMPLISHED (TC 20070321005)

CA070531002	CNDAIR	GE	ENGINE	VIBRATION
5/24/2007	CL6002B19	CF343A1	CF343A1	RIGHT

(CAN) AIRCRAFT (FLT 4344) WAS ENROUTE WHEN CREW EXPERIENCED AN UNCONTROLLABLE VIBRATION FROM THE RT ENGINE. THE ENGINE WAS SHUTDOWN IN FLIGHT. THE AIRCRAFT WAS DIVERTED AND LANDED AT TRI. IT WAS REPORTED BY THE CREW (TO MAINT CONTROL) THAT THE RT THROTTLE WAS BINDING NEAR FLIGHT IDLE BUT THEY WERE ABLE TO PERFORM A SHUTDOWN. IN ADDITION, IT WAS REPORTED THAT PARTS OF THE COWL/NACELLE HAVE DEPARTED THE AIRCRAFT. (TC NR 20070531002)

CA070505001	CNDAIR	GE	WINDOW	CRACKED
5/1/2007	CL6002B19	CF343A1	NP1393225	COCKPIT

(CAN) THE CAPTAIN`S SIDE WINDSCREEN OUTER PANE CRACKED. THE FLIGHT WAS AT 34000FT, WHEN THE

INCIDENT OCCURRED, THEN THEY DESCENDED AND DAWNED THEIR OXYGEN MASKS AS A PRECAUTION. THERE WAS NO PRESSURE LOSS AND NO EMERGENCY DECLARED. MAINTENANCE INSPECTED THE AIRCRAFT AFTER LANDING AND REPLACED THE CRACKED WINDOW. (TC NR 20070505001)

CA070520001	CNDAIR	GE	LANDING GEAR	COLLAPSED
5/20/2007	CL6002B19	CF343A1		

(CAN) UPON ARRIVAL CREW HAD A SUSPECTED HARD LANDING, STAB TRIM AURAL WARNING CLACKER SOUNDED AND BOTH MAIN GEAR COLLAPSED. THERE WAS MAJOR STRUCTURAL DAMAGE AND PRELIMINARY REVIEW OF PICTURES SHOWS EXCESSIVE ENGINE BLADE DAMAGE DUE TO DEBIS INGESTION, FURTHER UPDATE TO FOLLOW. TSB HAS PULLED THE FDR AND CVR. PRESENTLY INVESTIGATION IS UNDERWAY AND WILL UPDATE FURTHER WHEN COMPLETE. (TC NR 20070520001)

CA070521001	CNDAIR	GE	LANDING GEAR	COLLAPSED
5/20/2007	CL6002B19	CF343A1		

(CAN) UPON ARRIVAL, CREW HAD A SUSPECTED HARD LANDING. STAB TRIM AURAL WARNING CLACKER SOUNDED AND BOTH MAIN GEAR COLLAPSED. THERE WAS MAJOR STRUCTURAL DAMAGE AND A PRELIMINARY REVIEW OF THE PICTURES SHOWS EXCESSIVE ENGINE BLADE DAMAGE DUE TO DEBRIS INGESTION. THE FDR AND CVR HAVE BEEN PULLED BY TSB AND AN INVESTIGATION IS UNDERWAY. NO PICTURES AVAILABLE TO THE FSR AS OF YET. (TC NR 20070521001)

CA070518006	CNDAIR	GE	PSEU	MALFUNCTIONED
5/16/2007	CL6002B19	CF343A1	864808	LANDING GEAR

(CAN) IN CRUISE FLIGHT CREW RECEIVED PROX SYS CHAN FAULT CAUTION MESSAGE AS WELL AS (3) RED GEAR INDICATIONS, IAW AFM HAD TO PERFORM ALTERNATE EXTENSION, FLIGHT LANDED WITHOUT INCIDENT. AFTER MAINTENANCE TROUBLESHOOTING THE MDC IS POINTED TOWARDS THE PSEU ITSELF. THE PSEU WAS REPLACED AND FUNCTION TESTS WERE CARRIED OUT AND GEAR SWINGS AND THE AIRCRAFT WAS RETURNED TO SERVICE. PRESENT AC HRS:24426:01 AND CYCLES: 20077 (TC NR 20070518006)

CA070506002	CNDAIR	GE	NOSE COWL	DAMAGED
5/5/2007	CL6002B19	CF343A1	22850020113	RT ENGINE

(CAN) DURING A SCHEDULED MAINTENANCE CHECK, AFTER FAN COWL RT REMOVAL, STRUCTURAL DAMAGE WAS OBSERVED ON THE INLET COWL BY THE CAPPED 14TH STAGE BLEED AIR DUCT. DAMAGE WAS OBSERVED ON THE REMOVED FAN COWL, SAME AREA, AS WELL. MAINTENANCE PROCEED TO REPLACE THE FAN COWL AND THE INLET COWL. AIRFRAME HOURS=26110:41. CYCLES= 21307. (TC NR 20070506002)

CA070511011	CNDAIR	GE	HANDLE	CRACKED
5/2/2007	CL6002B19	CF343B1	601R317621	PAX DOOR

(CAN) DURING ROUTINE MAIN CABIN DOOR INSPECTION FOUND MAIN CABIN PHASE IV DOOR HANDLE WITH (2) CRACKS. DOOR HANDLE REPLACED. AIRCRAFT RETURNED TO SERVICE (TC NR 20070511011)

CA070521002	CNDAIR	GE	CONTROL UNIT	MALFUNCTIONED
5/14/2007	CL6002B19	CF343B1	70609	HORIZ STAB

(CAN) THERE WAS A STAB TRIM RUNAWAY EVENT THAT OCCURRED. AN EMERGENCY WAS DECLARED AND A RETURN TO BASE. FURTHER AC DAMAGE AFTER SUCCESSFUL LANDING. BASED ON THE ATTACHED CREW REPORT, IT WAS A STAB TRIM RUNAWAY NOSE DOWN EVENT. PLEASE NOTE THAT A DFDR DOWNLOAD WAS CARRIED OUT ON THIS AC AND A COPY OF THIS DOWNLOAD WILL BE SENT TO THE APPROPRIATE PEOPLE WITHIN MFG AS SOON AS IT BECOMES AVAILABLE TO ME. THE NTSB ADVISED THAT THE FAA HAS REPORTED THIS AIRCRAFT DECLARED AN EMERGENCY DUE TO A STABILIZER TRIM PROBLEM. THE AIRCRAFT WAS ON A SCHEDULED FLIGHT WHEN THE STAB TRIM RUNAWAY FAULT OCCURRED. THE NTSB ALSO REPORTED THAT THE CREW FOLLOWED THE QRH PROCEDURES AND AIRCRAFT REACHED A NOSE-DOWN ATTITUDE BY THE TIME THE CIRCUIT BREAKERS WERE PULLED. THE AIRCRAFT LANDED WITHOUT FURTHER INCIDENT. THE MAINTENANCE CREW REPLACED THE HSTCU P/N 7060-9 WITH P/N 7060-10 AND DOWNLOADED THE FLIGHT DATA FROM THE FDR AS REQUESTED BY MFG. THE NTSB REQUESTED THAT THE REMOVED HSTCU (P/N 70609) BE SENT FOR FURTHER INVESTIGATION AND IT IS EXPECTED THAT THE FAA WILL BE PRESENT. MFG WILL ANALYZE THE FDR DATA AS SOON AS IT BECOMES AVAILABLE. (TC NR 20070521002)

CA070509004	CNDAIR	GE	COWLING	SEPARATED
5/3/2007	CL6002B19	CF343B1	2285008114	NR 1 ENGINE

(CAN) ON DESCENT, THROUGH FL280, CREW FELT SLIGHT VIBRATION TO THE AIRCRAFT. FIRST OFFICER (FO) FELT A SLIGHT SHUDDER IN THE CABIN. ON ARRIVAL, IT WAS FOUND NR 1 LOWER ENGINE COWL HAD SEPARATED FROM THE AIRCRAFT. UPON MAINTENANCE INITIAL INSPECTION, IT WAS NOTED THAT 75 PERCENT OF THE CAMLOC FASTENERS THAT HOLD THE COWL WERE STILL INSTALLED IN THE COWL RETAINERS. THE COWL SEPARATION CAUSED DAMAGE TO THE UPPER ACCESS NOSE COWL, NOSE COWL, LOWER TORQUE BOX, LOWER OB T/R CASCADE, AND SOME T/R PDU LINES. (2) RETAINERS WERE REPLACED, THE LOWER CASCADE VANE WAS REPLACED, P2 SENSE LINE WAS REPLACED AND THE UPPER AND LOWER COWLS WERE REPLACED. THE A/C WAS THEN FERRIED FOR FULL INSPECTION AND REPAIR. AFTER FURTHER INSPECTION, IT WAS NOTED THAT THE SIDE NOSE COWL FIXED FAIRING WAS ALSO DAMAGED. THE NR 1 ENGINE WAS REMOVED AND THE SIDE NOSE COWL FIXED FAIRING WAS REPLACED AND THE INLET COWL TO THE ENGINE WAS REPLACED. THE NR 1 ENGINE WAS RE-INSTALLED AND FUNCTION CHECKS WERE C/O AND THE AIRCRAFT WAS RETURNED TO SERVICE. PRESENTLY AN INVESTIGATION IS UNDER WAY TO DETERMINE THE POSSIBLE CAUSE OF THE INCIDENT. UPDATES TO FOLLOW. (TC NR 20070509004)

CA070528007	CNDAIR	GE	SELECTOR VALVE	UNSERVICEABLE
5/26/2007	CL6002B19	CF343B1	750006000	NLG WW

(CAN) CLIMBING THROUGHT 13000 FT AT 290 KIAS, THE NLG DOOR WARNING/UNSAFE MESSAGE WAS DISPLAYED AND CREW COULD HEAR A CLUNKING NOISE FROM THE NLG AREA. ELECTED TO RETURN. MLG EXTENDED NORMALLY WITH (3) GREEN LIGHTS AND NO CAUTION/ADVISORY MESSAGES DISPLAYED. AIRCRAFT LANDED AND TAXIED TO THE GATE WITHOUT FURTHER PROBLEM. TROUBLESHOOTING WAS IN PROGRESS AND FOUND THE LANDING GEAR SELECTOR VALVE WAS UNSERVICEABLE. PART WAS REPLACED, FUNCTION CHECK FOUND NO FURTHER DEFECT. AIRCRAFT RETURNED FOR SERVICE (TC NR 20070528007)

CA070321013	CNDAIR	GE	ECU	MALFUNCTIONED
3/19/2007	CL6002B19	CF343B1	21188002	APU

(CAN) GROUND CREW REPORTED FLAMES FROM APU EXHAUST DURING PUSHBACK. COCKPIT HAD NO FIRE INDICATIONS. CREW SHUTDOWN AND PASSENGERS DEPLANED. MAINTENANCE INSPECTED AND APU MEL`D. LATER MAINTENANCE TROUBLESHOOTING FOUND APU ECU WITH FAULT/ERROR CODES. APU ECU REPLACED. AIRCRAFT RETURNED TO SERVICE. (TC NR 20070321013)

CA070503001	CNDAIR	GE	ACTUATOR	UNSERVICEABLE
2/7/2007	CL6002B19	CF343B1	83963	HORIZONTAL STAB

(CAN) SHORTLY AFTER DEPARTURE, RUNWAY 27L, AT APPROXIMATELY 3000 FEET, THE AC ROLLED TO 45 DEGREES, AND PITCHED UP > 18 DEGREES. THE CREW RECOVERED THE AIRCRAFT AT AN ALTITUDE OF 4500 FEET. POST INCIDENT INVESTIGATION FOUND NO ANOMALIES WITH THE AILERON CONTROL SYSTEM, AILERON TRIM SYSTEM, ELEVATOR CONTROL SYSTEM, AND THE HSTA SYSTEM. SUBSEQUENT PRE-FLIGHT PREPARATION DETECTED A MALFUNCTION WITHIN THE HSTA. THE HSTA WAS REPLACED. AIR SAFETY IS IN CONTACT WITH THE TSBC WHO IN TURN ARE IN CONTACT WITH THE GERMAN BFU. CRJ 7901 APPEARS TO HAVE OPERATED WITHOUT FURTHER INCIDENT SINCE REPLACEMENT OF THE HSTA. CRJ 7901 WAS EQUIPPED WITH A –9 HSTCU DURING THE INCIDENT FLIGHT, THIS UNIT WAS NOT SUSPECTED AND WAS NOT REPLACED. AIR SAFETY HAS REQUESTED ADDITIONAL DETAILS AND A COPY OF THE FDR IF AVAILABLE. (TC NR 20070503001)

CA070531001	CNDAIR	GE	WINDSHIELD	CRACKED
5/27/2007	CL6002C10	CF348C1	NP13932111	COCKPIT

(CAN) CREW NOTED THAT LT W/S CRACKED IN CRUISE FLT (40,000FT) AND DIVERTED FOR MTX NO OTHER PROBLEMS NOTED. C/A REMOVED AND REPLACED LT WINDSHIELD IAW MM 56-11-01. REF LGPG 2330059 ITEM 1, 2, AND 3 FOR OK TO INSTALL, FUNCTIONAL CHECK AND OPS CHECK. END (TC NR 20070531001)

CA070328003	CNDAIR	GE	LINE	FAILED
3/23/2007	CL6012A12	CF348E5A1	600752406	HYD SYSTEM

(CAN) DURING ROUTINE SERVICING AFTER A/C ARRIVAL, HYD FLUID WAS NOTICED LEAKING OUT OF THE BOTTOM OF THE RUDDER AND RUNNING DOWN THE TAILCONE AND TO THE GROUND. PANELS WERE REMOVED

TO LOCATE THE LEAK, FIGURING THAT THERE WAS A BAD RUDDER PCU LEAKING. WHAT WAS FOUND IT WAS THE NR 3 HYDRAULIC RETURN SYSTEM LINE P/N 600-75240-6 CHAFED THREW AT THE BOTTOM OF THE HORIZONTAL STAB REAR SPAR. 3 MONTH PREVIOUS A 15,000 HOUR INSP WAS C/O AND THE CENTER BOTTOM HINGE BEARING WAS FOUND WORN OUT, SO THE HOLE BRACKET ASSY WAS REPLACED. TO REPLACED THIS BRACKET THE HYD LINE OF THE NR 3 RETURN SYSTEM HAD TO BE DISASSEMBLE TO GAIN ACCESS TO THE BRACKET. WHEN THE RUDDER WAS REMOVED TO DO THE REPAIR, AS THIS LINE IS ON THE REAR SPAR, IT WAS NOTICED THAT THE LINE P/N 600-75240-6 HAD MIGRATED AFT FROM THE ADELL CLAMP ITEM 113 IPC 27-27-0 FIG 1, AND CHAFED THRU AS THERE IS NOT MUCH CLEARANCE FROM THE LINE TO THE BOTTOM OF THE RUDDER. S/B A601-0081 WAS ISSUED IN 1984 CONCERNING THIS PROBLEM, THAT IF YOU DID NOT GET A CLEARANCE OF 0.125 FROM THE LINE TO THE LOWER RUDDER WAS TO DO THIS BULLETIN HAS IT REPLACES THE LINE FROM A -6 ALUMINUM LINE TO A -4 STAINLESS LINE GIVING MORE CLEARANCE. SO THE NEW LINE WAS REPLACED THE RUDDER REINSTALL CHECK FOR CLEARANCE AND FOUND SERVICEABLE. AND A/C RELEASED FOR RETURN TO SERVICE (TC NR 20070328003)

CA070426009	DHAV	PWA	RIB	CRACKED
4/20/2007	DHC2MKI	PT6A34	C2TE83ND	ELEVATOR

(CAN) THIS ELEVATOR LEADING EDGE RIB WAS FOUND CRACKED WHILE CARRYING OUT ANNUAL INSPECTION. IT WAS DETERMINED THAT THE CRACK WAS THE RESULT OF TOO SHARP OF A BEND RADIUS IN THE AREA WHERE THE PART GETS RIVETED TO THE ELEVATOR LEADING EDGE SKIN. THIS DEFECT WAS COMMUNICATED AND THE TOOLING HAS BEEN REPAIRED ALLOWING FOR A MOVE UNIFORM RADIUS ON THE PART IN QUESTION. (TC NR 20070426009)

CA070518004	DHAV	PWA	CASE	CRACKED
3/25/2007	DHC2MKI	R985AN14B	48564	ENGINE

(CAN) ENGINE WAS OVERHAULED OCT 02,2005, ENGINE WAS REMOVED FROM STEEL SHIPPING CONTAINER FOR INSTALLATION MARCH 25, 2007. CRACKS WERE FOUND ON THE REAR CASE AT THE IB HOLES FOR MAGNETO MOUNTING. THE ENGINE WAS SENT TO APPROVED AMO AND REPAIRED. FOLLOWING REPAIR ENGINE WAS INSTALLED IN AIRCRAFT . GROUND RUN FOR 30 SECONDS AND ENGINE SHUTDOWN DUE TO OIL LEAK FROM REAR CASE. VISUAL INSPECTION DISCOVERED THAT THE REAR CASE HAD (3) DISTINCT PIN HOLES THROUGH THE CASE IN THE AREA OF THE OIL SCREEN HOUSING. THE HOLES LOOKED LIKE CAUSED BY CORROSION. THE ENGINE WAS REMOVED AND IS TO BE SENT TO APPROVED AMO FOR FURTHER REPAIR OR REPLACEMENT OF REAR CASE/BLOWER ASSY. (TC NR 20070518004)

CA070327007	DHAV	PWA	ENGINE	MALFUNCTIONED
6/10/2006	DHC2MKI	R985AN14B	R985	

(CAN) ENGINE NOT PRODUCING FULL TAKEOFF MANIFOLD PRESSURE. (TC NR 20070327007)

CA070523008	DHAV	PWA	ARM	CRACKED
5/4/2007	DHC2MKI	R985AN14B	C2CF1777A	RUDDER

(CAN) CRACK FOUND IN WELD RADIUS ON OB SIDE OF CABLE ATTACH ARM. (TC NR 20070523008)

CA070524003	DHAV	PWA	DHAV	STRUT	CRACKED
5/24/2007	DHC3	PT6A34	557170	C3UF1085	FLOAT

(CAN) DURING ANNUAL INSPECTION A (4 TO 5) CRACK WAS FOUND. THE CRACK PROPAGATED COMPLETELY THROUGH THE BOTTOM CENTER OF THE STRUT LEG BETWEEN THE LOWER ATTACH POINTS. THE STRUT LEG WAS REMOVED AND REPLACED. PICTURES ON FILE AT REPAIR STATION. (TC NR 20070524003)

CA070503007	DHAV	BFGOODRICH	LOCK	MISSING
4/28/2007	DHC5A		530425	BRAKE

(CAN) DURING A ROUTINE DAILY INSPECTION, IT WAS NOTED ON ONE OF THE BRAKE UNITS WEAR INDICATOR PINS WAS NO LONGER PROTRUDING FROM THE BRAKE. UPON FURTHER INVESTIGATION IT WAS DISCOVERED THAT THE LOCKING CLIP FOR THE END OF THE PIN WAS MISSING ALLOWING THE PIN TO SLIDE IN AND OUT OF THE UNIT. THE BRAKE UNIT HAD JUST BEEN RETURNED FROM REPAIR BY CONDOR AVIATION AND INSTALLED ON THE AIRCRAFT 24.3 HOURS BEFORE. THE DEFECTIVE UNIT WAS REMOVED AND REPLACED WITH A SERVICEABLE ONE. (TC# 20070503007)

CA070202012	DHAV	LUCAS	BEARING	FAILED
1/31/2007	DHC5A			DC GENERATOR

(CAN) AIRCRAFT WAS RETURNING TO BASE WHEN THE NR 1 GENERATOR FAILED. FLIGHT WAS CONTINUED WITHOUT FURTHER PROBLEMS. WHEN MAINTENANCE REMOVED THE GENERATOR FOR REPLACEMENT THE QUILL SHAFT WAS FOUND SHEARED AND THE FORWARD BEARING ON THE GENERATOR SUFFERED A CATASTROPHIC FAILURE AND WAS COMPLETELY DESTROYED. THE GENERATOR HAD JUST BEEN INSTALLED 102 HOURS PREVIOUSLY FRESH FROM OVERHAUL FACILITY. ANOTHER GENERATOR WAS INSTALLED AND CHECKED SERVICEABLE. (TC 20070202012)

CA070515002	DHAV	PWA	DHAV	COLLAR	CRACKED
5/14/2007	DHC6200	PT6A20	7110029	711619	STEERING

(CAN) DURING MAINTENACE TO REPAIR THE NOSE GEAR ASSEMBLY IT WAS NOTED THAT THE STEERING COLLAR WAS CRACKED. THE NOSE GEAR WAS THEN FULLY DISASSEMBLED TO REMOVE THE CRACKED STEERING COLLAR. THE NLG WAS THEN VISUALLY INSPECTED AND SOME OF THE ITEMS SENT FOR NDT. STEERING COLLAR CRACK CONFIRMED BY NDT. STEERING LIMITS OF ACTUATOR CHECKED FOR CORRECT TRAVEL AND VERIFIED WITHIN LIMITS. THIS COLLAR HAS BEEN IN SERVICE FOR SOME TIME. (TC NR 20070515002)

CA070329007	DHAV	PWA	GOVERNOR	UNSERVICEABLE
3/14/2007	DHC6300	PT6A27	8210004	PROPELLER

(CAN) A GROUND INCIDENT OCCURRED WHERE ONE AC TAXIED INTO ANOTHER. BOTH AIRCRAFT WERE ON STRAIGHT SKIS. AFTER START-UP THE AC MOVED FORWARD FROM ITS PARKING SPOT, THEN WHEN THE PILOT MOVED THE POWER LEVER INTO REVERSE THE NR 2 PROP WENT INTO REVERSE MOMENTARILY BUT THEN WENT INTO FORWARD PITCH WITH THE POWER LEVER STILL IN REVERSE. AS A CONSEQUENCE THE RT WING MOVED FORWARD CAUSING THE AIRCRAFT TO SWING TO THE LT AND THE AIRCRAFT ENDED UP WITH IT'S LT WING UNDER THE RT WING OF THE PARKED AC, IT'S LT SPINNER INTO THE RT WINDSHIELD OF THE PARKED AC, AND THE NR 1 PROP DAMAGED THE NOSE OF THE PARKED AIRCRAFT. AFTER TEMPORARY REPAIRS WERE COMPLETED AND THE NR 1 PROP AND ENGINE WERE CHANGED ON THE AIRCRAFT THAT HAD TAXIED INTO THE PARKED AIRCRAFT, ENGINE RUN-UPS WERE CARRIED OUT AND IT WAS DETERMINED THAT THE RT ENGINE PROP GOVERNOR WAS THE CAUSE OF THE NR 2 ENGINE GOING FROM REVERSE TO FORWARD PITCH. THIS PROP GOVERNOR HAD 2861.5 HRS.TSO ON IT AT THE TIME OF THE INCIDENT. THE PROP GOVERNOR WAS REPLACED AND AFTER ENGINE RUN-UP ALL SYSTEMS CHECKED SERVICEABLE. THE PROP GOVERNOR IN QUESTION WAS SENT FOR O/H WITH A REQUEST FOR A DETAILED REPORT. THIS WILL BE ADDED TO THE WSDRS WHEN RECEIVED. (TC NR 20070329007)

CA070515007	DHAV	PWA	OIL SYSTEM	MALFUNCTIONED
5/13/2007	DHC6300	PT6A27		ENGINE

(CAN) DURING CRUISE FLIGHT, THE FLIGHT CREW NOTICED A MOMENTARY FLUCTUATION AND THEN DECREASING OIL PRESSURE, THEN EVERYTHING RETURNED TO NORMAL. MOMENTS LATER, THE ENGINE FAILED AND THE CREW CARRIED OUT THE SHUTDOWN. THE AIRCRAFT LANDED WITHOUT INCIDENT, ONCE ON THE GROUND, THE FLIGHT CREW ATTEMPTED TO TURN THE PROPELLER AND FOUND IT WAS SEIZED. MAINTENANCE ARRIVED AND CONFIRMED A CATASTROPHIC FAILURE OF THE POWER SECTION GEAR BOX. (TC NR 20070515007)

CA070514055	DHAV	PWA	ENGINE	FLAMED OUT
4/22/2007	DHC8*	PW120	PW120	

(CAN) THE ENGINE FLAMED OUT IN CRUISE. MFG WILL INVESTIGATE THE EVENT AND ADVISE OF ROOT CAUSE ONCE ESTABLISHED. (TC NR 20070514055)

CA070507005	DHAV	PWA	PULLEY	MISINSTALLED
5/7/2007	DHC8*	PW123	82742339001	SPOILER CABLE

(CAN) AN OPERATOR HAS REPORTED THE FOLLOWING FINDINGS DURING THE C2 INSPECTION BEING PERFORMED ON AN AIRCRAFT. DURING INSPECTION OF THE SPOILER CABLE DISCONNECT SENSING SYSTEM ASSY, THE FAIRLEAD ROLLER AND SPRING ATTACHMENT HAVE BEEN FOUND INSTALLED INCORRECTLY. THE OPERATOR STATE THAT THEY HAD NO REASON TO BELIEVE THAT THIS COULD HAVE BEEN CARRIED OUT IN SERVICE, AND THE ERROR WOULD HAVE OCCURRED DURING AIRCRAFT PRODUCTION. THE OPERATOR IS

CURRENTLY CONDUCTING A FLEET-WIDE INSPECTION AND WILL ADVISE US ON THEIR FINDINGS. (TC NR 20070507005)

CA070503011	DHAV	PWA	CABLE	SEPARATED
4/28/2007	DHC8102	PW120A	3811374102	INDICATOR

(CAN) THE ORIGINAL RESERVOIR WAS REPLACED DUE TO FAULTY DIAPHRAGM INTERNALLY. NEW O/H UNIT WAS INSTALLED. APPROXIMATELY 127 HOURS LATER AS THE AIRCRAFT WAS PREPARING FOR DEPARTURE THE HYD. LOW PRESS. LIGHTS ILLUMINATED. THE AIRCRAFT RETURNED TO THE DEPARTURE RAMP AND SHUTDOWN. DURING THE INVESTIGATION OF THE FAULT THE HYD LEVEL WAS CHECKED USING THE GAUGES WHICH BOTH SHOWED FULL. THE PUMP WAS REMOVED TO SEE IF THE SHAFT HAD SHEARED BUT IT DID NOT. UPON FURTHER TROUBLESHOOTING IT WAS DISCOVERED THAT THE HYDRAULIC SYSTEM WAS EMPTY. IT WAS THEN NOTICED UPON CLOSER INVESTIGATION OF THE INDICATOR CABLE ASSY. THAT THERE WAS A KINK IN THE CABLE NEXT TO THE NUT WHICH SECURES IT TO THE TOP OF RESERVOIR PREVENTING FREE MOVEMENT OF THE INDICATOR LEAVING IT STUCK AT THE (FULL) INDICATION. THE KINK WAS HIDDEN BY THE PROTECTIVE SLEEVE AND ONLY NOTICED WHEN IT WAS PULLED BACK. THE KINK WAS REPAIRED AND CABLE RE-SECURED TO PREVENT FURTHER DAMAGE. A NEW CABLE IS ON ORDER AND UNTIL IT ARRIVES, THE LEVEL IS PHYSICALLY CHECKED DURING EVERY (L CHECK). THE SOURCE OF THE HYDRAULIC LEAK WHICH LED TO THE EMPTY RESERVOIR STILL HAS NOT BEEN LOCATED AND THE LEVEL HAS STAYED STABLE SO FAR. (TC NR 20070503011)

CA070512001	DHAV	PWA	WINDOW	CRACKED
5/10/2007	DHC8102	PW120A	NP15790213	COCKPIT

(CAN) UPON ARRIVAL AT THE GATE THE PILOT SET THE PARK BRAKE AND AND THE PILOT`S SIDE WINDOW OUTER LAYER SHATTERED. THE WINDOW WAS REPLACED BY MAINTENANCE AND FUNCTION CHECKED SERVICEABLE. (TC NR 20070512001)

CA070321007	DHAV	PWA	PSEU	MALFUNCTIONED
3/20/2007	DHC8103	PW121		MLG

(CAN) DURING APPROACH TO AIRPORT, THE PILOTS SELECTED GEAR DOWN AND HAD A GEAR (UNSAFE) LIGHT BUT NO GEAR EXTENSION. ALTERNATE EXTENSION WAS PERFORMED IAW CHECK LIST WITHOUT FURTHER REMARKS. PSEU (PROXIMITY SWITCHING ELECTRONIC UNIT) REPLACED AS PRECAUTION. FURTHER INVESTIGATION FOUND OUT THE MAIN CAUSE OF THE EVENT WAS LOOSE WIRING/TERMINAL ON THE MLG INHIBIT SWITCH. MFG ISSUED DASH 8 Q100/200/300 AOM 828 TO PROVIDE DETAILS OF THIS EVENT. (TC NR 20070321007)

CA070503002	DHAV	PWA	SLEEVE	WORN
4/30/2007	DHC8106	PW121	8173861	MR 3 BLADE

(CAN) DURING ACTUATOR CHANGE FOUND THAT THE BLADE PIN BEARING ON THE NR 3 BLADE HAD EXCESSIVE MOVEMENT. UPON FURTHER INVESTIGATION, FOUND THAT THE BEARING SLEEVE WAS WORN THRU TO THE BEARING AND THAT THE BLADE PIN WAS WORN AS WELL. MFG SB 14SF-61-134 ADDRESSES THE PROBLEM ENCOUNTERED AND WAS NOT BEEN INCORPORATED ON THIS BLADE. (TC NR 20070503002)

CA070514048	DHAV	PWA	PACKING	LEAKING
4/13/2007	DHC8201	PW123	ST3367009	FUEL NOZZLE

(CAN) DURING STARTING, FUEL WAS FOUND LEAKING FROM THE ENGINE. SUBSEQUENT INSPECTION REVEALED DAMAGED FUEL NOZZLE TRANSFER TUBE O-RING PACKINGS. (TC NR 20070514048)

CA070510007	DHAV	PWA	ACTUATOR	CRACKED
5/4/2007	DHC8301	PW123	85311176009	NLG

(CAN) ON APPROACH, THE NOSE LANDING GEAR WOULD NOT EXTEND TO THE DOWN AND LOCKED POSITION. CREW DID A FLY-BY PASS THE ATC CONTROL TOWER, WHO CONFIRMED THAT THE GEAR WAS EXTENDED, BUT DID NOT APPEAR TO BE LOCKED. GEAR WAS CYCLED AND ALL (3) GEARS WERE CONFIRMED DOWN AND LOCKED. AIRCRAFT THEN LANDED WITHOUT FURTHER INCIDENT. AIRCRAFT WAS THEN FERRIED WITH GEAR PINNED DOWN TO A MAINTENANCE BASE FOR FURTHER INSPECTION AND REPAIR. THE FOLLOWING DAMAGE WAS FOUND. THE NLG UPLOCK ACTUATOR FITTING ASSY P/N 85311176-009 WAS FOUND CRACKED AT THE ACTUATOR ATTACH POINT. DISCOLORATION OF PART OF THE CRACK INDICATES PROPAGATION OCCURRED OVER A PERIOD OF TIME. RECOMMEND A MORE FOCUSED SPECIFIC VISUAL OR NDT INSPECTION OF THIS FITTING. THE NLG

TRUNNION SIDE WALL WEB AND TOP WEB WERE ALSO FOUND CRACKED. MEMBER P/N 85311420 ON RT SIDE OF WALL, FOUND CRACKED. REPAIRS WERE ACCOMPLISHED IAW RD8-53-458, RD8-53-582, AND RD8-53-1676. AFTT: 39686 HRS. TOTAL CYCLES: 51155. (TC NR 20070510007)

CA070514046	DHAV	PWA	ROTOR	SEIZED
4/11/2007	DHC8301	PW123		ENGINE

(CAN) DURING CLIMB THE ENGINE EXHIBITED VIBRATION AND SHUTDOWN, UNCOMMANDED. SUBSEQUENT INSPECTION REVEALED HIGH PRESSURE ROTOR SEIZURE AND METAL CONTAMINATION IN THE TURBO MACHINE OIL SYSTEM. MFG WILL INVESTIGATE THE EVENT AND ADVISE OF ROOT CAUSE ONCE ESTABLISHED. (TC NR 20070514046)

CA070510001	DHAV	PWA	CHECK VALVE	CRACKED
5/6/2007	DHC8301	PW123	DSC1896	NR 2 HYD SYS

(CAN) AN OPERATOR EXPERIENCED A LOSS OF NR 2 HYD FLUID SYSTEM DUE TO A FRACTURED CHECK VALVE WHEN THE LANDING GEAR WAS SELECTED DOWN DURING APPROACH. THE CAUSE OF THE EVENT IS A CIRCUMFERENTIAL CRACK AROUND NR 2 HYD SYSTEM MANIFOLD CHECK VALVE. (TC NR 20070510001)

CA070326001	DHAV	PWA	WIRE HARNESS	CHAFED
3/22/2007	DHC8301	PW123		

(CAN) AN OPERATOR HAS REPORTED FINDING SOME WIRE LOOMS THAT WE HAVE DAMAGED DUE TO CHAFING. THIS CHAFING IS OCCURRING WITH THE CABIN FLOOR WIRE TROUGH ON AN A/C THAT IS POST MOD 8/2705, S/B 8-53-66. THE BULK OF THE CHAFING HAS BEEN OBSERVED IN THE REAR OF THE FUSELAGE WHERE THE LOOM TIE MOUNTS ARE GREATLY REDUCED. MFG IS REVIEWING WIRING INSTALLATION. (TC NR 20070326001)

CA070319004	DHAV	PWA	DUMP VALVE	LEAKING
3/16/2007	DHC8301	PW123	263451	FLOW DIVIDER

(CAN) AFTER TAKEOFF DURING CLIMB, NR1 ENGINE LOST POWER AND TRQ ROLL BACK, CREW ELECTED TO SHUT ENGINE DOWN AND RETURN TO DEPARTURE AIRPORT. MAINTENANCE INSPECTION FOUND FUEL SUPPLY LINE TO FLOW DIVIDER/DUMP VALVE (B-NUT) NOT LOCKWIRED AND BACKED OFF, ALLOWING HIGH PRESSURE FUEL LEAK. O-RINGS REPLACED, FUEL LINE (B-NUT) TIGHTENED AND LOCKWIRED. ENGINE RUNS CARRIED OUT, AIRCRAFT RETURNED TO SERVICE. (TC NR 20070319004)

CA070314011	DHAV	PWA	SHAFT	DAMAGED
2/8/2007	DHC8301	PW123		ACCESSORY DRIVE

(CAN) THE ENGINE EXPERIENCED AN UNCOMMANDED POWER REDUCTION IN CRUISE AND WAS SHUTDOWN IN FLIGHT. SUBSEQUENT INSPECTION REVEALED ACCESSORY DRIVE TOWER SHAFT DAMAGE. MFG WILL INVESTIGATE THE EVENT AND ADVISE OF ROOT CAUSE ONCE DETERMINED. (TC NR 20070314011)

CA070425002	DHAV	PWA	STRUT	SEPARATED
4/21/2007	DHC8301	PW123	83210301001	LT MLG

(CAN) LT MLG SEPARATED FROM AIRCRAFT DURING LANDING. THE LOWER OLEO STRUT WITH THE WHEELS AND AXLE DEPARTED THE AIRCRAFT; AIRCRAFT LANDED ON DRAG STRUT WHICH THEN COLLAPSED AND SHEARED OFF. SUBSTANTIAL DAMAGE WAS DONE TO THE LOWER FUSE, LT NACELLE, ENGINE AND PROP, AND LT WING TIP. PILOT REPORTED THAT THERE WAS NOT A HARD LANDING. MFGS ARE INVESTIGATING THE EVENT. (TC NR 20070425002)

CA070524007	DHAV	PWA	COUPLING	TORN
5/20/2007	DHC8311	PW123	735619C	T/E FLAP

(CAN) CREW REPORTED (FLAP DRIVE) CAUTION LIGHT ILLUMINATED DURING FLAP EXTENSION , FLAPS CONTINUED TO MOVE. NORMAL LANDING. MAINTENANCE INSPECTION FOUND FLAP SECONDARY CENTER DRIVE COUPLING TORN FROM MOUNTING BRACKET AND LYING IN RT ARMPIT. FLAP SECONDARY CENTER DRIVE SECTION (CORE AND HOUSING) REPLACED, FLAP SECONDARY DRIVE CENTER COUPLING REPLACED. MOUNTING BRACKET REPLACED. FLAP SECONDARY DRIVES CLEANED AND LUBRICATED. AIRCRAFT RETURNED TO SERVICE. NOTE: FLAP SECONDARY DRIVE INSPECTION AND LUBRICATION TASKS (1500HR INTERVAL) LAST COMPLETED

791HR / 949CY PREVIOUS. (TC NR 20070524007)

CA070427008	DHAV	PWA	GUARD	WORN
4/25/2007	DHC8311	PW123	82740220101	

(CAN) FLIGHT CREW REPORTED ROLL CONTROL INPUTS SEEMED STIFF, ESPECIALLY LT TO RT IN-FLIGHT. ON GROUND NO INDICATION OF STIFFNESS AND NOTHING ADVERSE WITH ROLL DISCONNECT. MAINTENANCE INSPECTION FOUND LT OB AILERON CABLE ROUTED AROUND WRONG SIDE OF CABLE GUARD. CABLE ROUTING WAS RECTIFIED, CABLE GUARD REPLACED, CABLE INSPECTED WITH NO SIGNS OF DETERIORATION. AILERON CABLES RE-TENSIONED AND INDEPENDENT INSPECTION COMPLETED. AIRCRAFT RETURNED TO SERVICE. REF: DHC-83 IPC 27-12-00 FIG 10 ITEM 350 P/N 82740220-101 CABLE GUARD , REF: DHC-83 IPC 27-12-00 FIG. 25 ITEM 470 P/N 82700563-S001 CABLE, REF: DHC SERIES 300 MAINT. TASK CARD 2710/02 PG 3 OF 6 VIEW H, PG 6 OF 6 FIGURE 4 CABLE ROUTING. (TC NR 20070427008)

CA070424006	DHAV	PWA	DIODE	MISWIRED
4/20/2007	DHC8311	PW123	C030722	LT DC ESS BUSS

(CAN) DURING GRD RUN LEAK CHECKS, AFTER ROUTINE MAINTENANCE, NOTED NO DISCHARGE SHOWING ON THE BATTERY MONITOR FOR THE AUX BATTERY. INVESTIGATION FOUND WIRING BACKWARDS AT DIODE 2431-CR5; THIS IS THE POWER SUPPLY TO THE BUS FROM THE AUX BATTERY. IN THIS CONDITION NO POWER IS AVAILABLE FROM THE AUX BATTERY UNDER ANY CONDITIONS. THE ONLY INDICATION OF THIS MISCONNECTION WAS BATTERY MONITOR SHOWING NO DISCHARGE FROM THE AUX BATTERY, WHEN BOTH MAIN AND AUX BATTERIES WERE SELECTED ON. (NORMAL OPERATING PROCEDURE IS TO HAVE BOTH BATTERIES SELECTED ON) ALL OTHER ELECTRICAL SYSTEM INDICATIONS WERE NORMAL. WIRING CORRECTED SYSTEM FUNCTION CHECKED NORMAL. (TC NR 20070424006)

CA070322006	DIAMON	CONT	PUMP	OUT OF ADJUST
1/28/2007	DA20C1	IO240B	64936849A1	FUEL SYSTEM

(CAN) PILOT REPORTED ENGINE STOPPED DURING POWER OFF STALL. RECORDS INDICATED (2) SID97-3C FUEL SET UP ADJUSTMENTS CARRIED OUT IN THE PREVIOUS FIVE DAYS OR 13.1 HRS PRIOR TO THE INCIDENT. SID CHECK REVEALED UNMETERED PRESSURE OUT OF LIMITS BY -1.1 PSI, LIMIT IS +/- 0.2 PSI. MECHANICAL FUEL PUMP REPLACED, PUMP OFF S/N B06LA110, NEW PUMP S/N B06LA111 INSTALLED, FUEL INJECTORS, INLINE FILTER AND ALL FUEL LINE REMOVED CLEANED INSPECTED AND RE-INSTALLED. AIRCRAFT RELEASED CONDITIONAL TO SATISFACTORY TEST FLIGHT AND TEST FLOWN UNSATISFACTORY. EITHER PUMP WAS UNABLE TO BE ADJUSTED TO OBTAIN LEANING SCHEDULE LIMITS OR UNABLE TO RE-ADJUST TO MEET SID SPEC AFTER TEST FLIGHT. MECHANICAL FUEL PUMP REPLACED ONCE AGAIN WITH NEW REPAIRED PUMP S/N B06IA171. (REPAIRS WERE ONLY TO REPLACE ONE FITTING WHICH WAS DAMAGED DURING INSTALLATION) . AIRCRAFT RELEASED CONDITIONAL TO SATISFACTORY TEST FLIGHT AND TEST FLOWN SATISFACTORY. (TC NR 20070322006)

CA070322002	DIAMON	CONT	GEAR	WORN
11/15/2006	DA20C1	IO240B	656762	STARTER

(CAN) THE FACT THAT IT IS POSSIBLE TO ACCIDENTALLY ENGAGE THE STARTER DRIVE WHILE THE ENGINE IS RUNNING AND THAT THE STARTER GEAR ENGAGES INTO THE ACCESSORY CASE OF THE ENGINE WHICH WOULD RESULT IN SIMILAR DAMAGE, IT WAS SUSPECTED AT THE TIME THAT THE DAMAGE FOUND WAS A RESULT OF SUCH ENGAGEMENT. THEREFORE AT THE TIME A SDR DID NOT SEEM REQUIRED. METAL WAS FOUND IN THE OIL FILTER ON INSPECTION, STARTER WAS REMOVED AND BOTH STARTER GEAR AND CLUSTER GEAR WERE FOUND DAMAGED BEYOND MFG LIMITS DESCRIBED IN SB04-7. FURTHER INSPECTION AT A LATER DATE INDICATED THAT THESE WERE MOST LIKELY NOT DUE TO ACCIDENTAL ENGAGEMENT AS THE DAMAGED AREA ON THE CLUSTER GEAR WAS CONCENTRATED 180 DEGREES APART WHICH WOULD BE CONSISTENT WITH WHERE THE PROP IS NORMALLY LOCATED DURING INITIAL START ENGAGEMENT. CLUSTER GEAR AND STARTER WERE BOTH REPLACED. (TC NR 20070322002)

CA070322003	DIAMON	CONT	DIAMON	BUSHING	MISSING
11/29/2006	DA20C1	IO240B		2055450001	RUDDER

(CAN) DURING INSPECTION IT WAS NOTED THAT THE TOP RUDDER ATTACHMENT PIN BUSHING WAS MISSING. FURTHER INSPECTION REVEALED THE BUSHING HAD FALLEN OUT AND WAS SITTING IN A VOID AREA BELOW THE ASSEMBLY. THE BUSHING WAS RE-INSTALLED IAW MFG INSTRUCTION. THE RUDDER HAD NEVER BEEN REMOVED

SINCE MANUFACTURE. (TC NR 20070322003)

2007FA0000385	DIAMON		FADEC	MALFUNCTIONED
5/1/2007	DA40			

THE ECU WARNING LIGHTS HAVE COME ON MULTIPLE TIMES NOW. ACCRODING TO THE MANUFACTURER, EACH TIME THESE ANNUNCIATORS COME ON THE AIRCRAFT MUST BE SERVICED BY AN APPROVED MECHANIC. BY THIELERTS EXPLANATION, IF THE AIRCRAFT GOES INTO A STEEP BANK OR UN-COORDINATED TURN THAN AN AIR BUBBLE CAN GET INTO THE FUEL LINE AND CAUSE UNEVEN PRESSURES BETWEEN THE TWO ENGINES. THE FADEC SENSES THIS AS A PROBLEM AND THE ECU WANRINGS TRIP. ACCORDING TO THIELERT THIS HAS BEEN HAPPENING FREQUENTLY ON AIRCAFT WITH THEIR FADEC ENGINES. THREE TIMES ALREADY ON OUR WITHIN 100 HOURS. IT IS A NUISANCE BECAUSE AN AIRCRAFT CAN EASILY BE STRANDED IN A LOCATION WITHOUT A THIELERT APPROVED MECHANIC. OR WORSE, IF A GENUINE PROBLEM EXISTED WE WOULDN'T KNOW IT BECAUSE OUR ANUUNCIATOR WAS ALREADY ON.

CA070529003	DOUG	PWA	ENGINE	MAKING METAL
5/27/2007	C54EDC	R20007M2		

(CAN) ENGINE REMOVED DUE TO METAL IN OIL SCREEN, TBO 750 HOURS. ENGINE BEING SENT OUT FOR OVERHAUL. (TC NR 20070529003)

CA070514058	EMB	PWA	COMPRESSOR	DAMAGED
2/27/2007	EMB110*	PT6A34		ENGINE

(CAN) DURING CRUISE THE ENGINE EMITTED A LOUD NOISE ACCOMPANIED BY A REDUCTION IN ALL PARAMERTERS TO ZERO. SUBSEQUENT INSPECTION REVEALED COMPRESSOR AND POWER TURBINE DAMAGE. MFG WILL INVESTIGATE THE EVENT AND ADVISE OF ROOT CAUSE ONCE ESTABLISHED. (TC NR 20070514058)

CA070514035	EMB	PWA	LINE	FRACTURED
3/26/2007	EMB110*	PT6A34	3011849	FCU

(CAN) A FUEL LEAK WAS DISCOVERED DURING GROUND HANDLING OPERATIONS. SUBSEQUENT INSPECTION REVEALED A FRACTURED FUEL TUBE. (TC NR 20070514035)

CA070514050	FLTCHR	PWA	ENGINE	MALFUNCTIONED
4/18/2007	FU24AIRPTS	PT6A11AG	PT6A11AG	

(CAN) ENGINE POWER INCREASED UNCOMMANDED AND THE ENGINE WAS SHUTDOWN IN FLIGHT. MFG WILL INVESTIGATE THE EVENT AND ADVISE OF ROOT CAUSE ONCE DETERMINED. (TC NR 20070514050)

CA070514004	FOKKER	PWA	COVER	LEAKING
5/2/2007	F27MK50	PW125B		RGB

(CAN) THE ENGINE LOW OIL PRESSURE WARNING ACTIVATED ON APPROACH AND THE ENGINE WAS SHUTDOWN IN FLIGHT. SUBSEQUENT INSPECTION REVEALED LEAKING AT THE REDUCTION GEARBOX ACCESSORY COVER RELATED TO COATING LOSS. (TC NR 20070514004)

CA070514059	FOKKER	PWA	PACKING	DAMAGED
4/23/2007	F27MK50	PW125B		FUEL NOZZLE

(CAN) DURING CRUISE ENGINE POWER REDUCED UNCOMMANDED AND THE ENGINE SUBSEQUENTLY FLAMED OUT. INSPECTION REVEALED A DAMAGED FUEL NOZZLE TRANSFER TUBE O-RING PACKING. (TC NR 20070514059)

CA061018008	FRCHLD	GARRTT	SPINNER	DENTED
10/11/2006	SA227CC	TPE33111U	SB10401	LT PROPELLER

(CAN) GOOSE HIT THE OB SIDE OF THE LT PROP SPINNER. DAMAGE WAS MINIMAL TO THE SPINNER WHERE THE BLADE CUT OUT IS. THERE WAS ALSO MINIMAL DAMAGE TO THE CHIN COWL PN 27-63026-053. DAMAGE ON BOTH UNITS WERE COVERED BY THE SRM LIMITS OF .3750 DEGREES 4. (TC NR 20061018008)

CA070319005	FRCHLD	GARRTT	IMPELLER	FRACTURED
3/16/2007	SA227CC	TPE33111U	8934825	ENGINE

(CAN) ENGINE WAS REMOVED DUE TO NOT MAKING TARGET TAKEOFF TORQUE. UPON DISASSEMBLY THE 2ND STAGE COMPRESSOR IMPELLER FAILED AND HAS EXPERIENCED A FATIGUE TYPE FAILURE. THE PRESENT TIME ON THE IMPELLER IS 20,650.2 HOURS AND 28,175 CYCLES. A LARGE PIECE OF THE LEADING EDGE BROKE OFF AND WAS DISCOVERED FURTHER DOWN IN THE ENGINE. IT HAS BEEN RETAINED. IT HAS EXTENSIVE DAMAGE DUE TO SECONDARY IMPACT DAMAGE. NO RUB DAMAGE, AS WOULD TYPICALLY CAUSE A PROBLEM, FOR THE IMPELLER WAS FOUND SUGGESTING THAT THE COMPRESSOR WAS BUILT PROPERLY. THE DAMAGE NOTED IN PHOTOGRAPH IS BELIEVED TO BE SECONDARY RUB DAMAGE DUE TO THE CRACKED PIECE GETTING LODGED BETWEEN THE SHROUD AND THE IMPELLER. ALL DIMENSIONS FOR ENGINE SHIMMING AND TNR CHECKED OUT CORRECT. NO FOD WAS NOTED. THE IMPELLER WAS NDT INSPECTED WITH NO RELEVANT INDICATIONS AT LAST CAM. CURRENTLY, THESE IMPELLERS HAVE NO CYCLE LIMIT. ALTHOUGH, IT IS A CRITICAL CYCLED COMPONENT, FEELS THAT THIS PN IMPELLER WILL BE REPLACED ON ATTRITION DUE TO WEAR AND TEAR AND AS SUCH DID NOT SET A LIFE LIMIT. MORE INFO WILL BE FORWARDED AFTER CONSULTATION WITH MFG. (TC NR 20070319005)

CA070507008	FRCHLD	GARRTT	TRUSS	CRACKED
5/6/2007	SA227DC	TPE33112UHR	276211495	RT ENGINE MOUNT

(CAN) DURING A PHASE 6 INSPECTION, A GAPING CRACK WAS FOUND ON THE RT ENGINE TRUSS MOUNT AT THE UPPER IB WELD JOINT OF THE FIREWALL ATTACH FITTING. (TC NR 20070507008)

CA070518008	FRCHLD	GARRTT	FUEL CAP	LEAKING
5/17/2007	SA227DC	TPE33112UHR	457370	LT WING

(CAN) SHORTLY AFTER TAKEOFF, THE CREW NOTICED THAT FUEL WAS LEAKING FROM THE LT WING FUEL CAP. THE CREW RETURNED TO BASE WITHOUT INCIDENT. THE AIRCRAFT WAS INSPECTED AND IT WAS DISCOVERED THAT THE FUEL CAP WAS DEFECTIVE. THE LARGE PLASTIC NUT AT THE BASE OF THE CAP ASSEMBLY IS HELD AT THE CORRECT TORQUE WITH THE USE OF A PIN THAT PASSES THROUGH THE NUT INTO THE BASES OF THE ASSEMBLY. THIS PIN WAS MISSING, WHICH ALLOWED THE NUT TO TURN WHEN THE FUEL CAP WAS OPENED AND CLOSED. THE TORQUE ON THIS NUT SETS THE PROPER SEATING OF THE FUEL CAP. BECAUSE THE NUT BACKED OFF, THE FUEL CAP BECAME LOSE AND ALLOWED FUEL TO LEAK PAST THE FUEL CAP. THE FUEL CAP WAS REPLACED WITH AN IMPROVED CAP THAT IS DESIGNED TO PREVENT THE PIN FROM FALLING OUT. (TC NR 20070518008)

CA070314018	GULSTM	PWC	ACTUATOR	FAILED
2/16/2007	200	PW306A		INLET GUIDE VANE

(CAN) ON APPLICATION OF POWER IN CLIMB, THE ENGINE EXPERIENCED A COMPRESSOR STALL ACCOMPANIED BY AN UNCOMMANDED POWER REDUCTION, PARAMETER FLUCTUATIONS AND A FADEC FAULT INDICATION. SUBSEQUENT INVESTIGATION LED TO REPLACEMENT OF THE ENGINE INLET GUIDE VANE ACTUATOR. (TC NR 20070314018)

CA070514036	GULSTM	PWC	ENGINE	NOISY
3/28/2007	200	PW306A		

(CAN) IN CRUISE THE ENGINE EMITTED A NOISE ACCOMPANIED BY VIBRATION, A FADEC FAULT INDICATION AND FIRE WARNING INDICATION. THE ENGINE WAS SHUTDOWN IN FLIGHT. MFG WILL INVESTIGATE THE EVENT AND ADVISE OF ROOT CAUSE ONCE ESTABLISHED. (TC NR 20070514036)

CA070517007	GULSTM	LYC	WINGLET	SEPARATED
5/8/2007	500S	IO540E1B5	9000351	WING

(CAN) IT WAS FOUND THAT THE SHEET METAL SCREWS HOLDING THE TIP ON THE WING HAD ALL COME LOOSE. THE WING TIP THEN VIBRATED FOR A PERIOD OF TIME ,ELONGATING THE SCREW HOLES IN THE WING UNTIL ALL OF THE SCREWS FELL OUT AND THE WING TIP DEPARTED THE WING IN FLIGHT. THE PILOT DID NOT NOTICE ANYTHING ABNORMAL AND ONLY NOTICED IT WAS MISSING ON WALK AROUND. (TC NR 20070517007)

2007FA0000453	GULSTM	RROYCE	WINDSHIELD	FAILED
4/7/2007	GIV	TAY6118	1159SCB31023	COCKPIT

CREW REPORTS WINDSHIELD FAILURE DURING PART 91 MAINTENANCE POSITIONING FLIGHT. EMERGENCY DECLARED WITH UNEVENTFUL LANDING. AIRCRAFT CONTINUED TO DESTINATION AIRPORT UNDER CDL RESTRICTIONS. UNKNOWN CAUSE. (K)

YNTA20070001	HAWKER		FLAP SYSTEM	INOPERATIVE
5/16/2007	BAE125700B			TE FLAPS

ON APPROACH, THE FLAPS BECAME STUCK AT 15 DEGREES. AFTER TRYING THE FLAPS 25 DEGREE SETTING NOTICED THE FLAPS DID NOT MOVE FROM THE 15 DEGREE POSITION. RESET THE FLAPS TO THE 15 DEGREE POSITION AND UP TO 0 DEGREE, NO MOVEMENT WAS NOTED. RESELECTED THE FLAPS TO 15 DEGREE EXECUTED A GO-AROUND WITH TOWER. REFERRED TO THE CHECK LIST FOR NO FLAP LANDINGS, NOTED THAT THERE IS NO LANDING DISTANCE DATA. DECLARED AN EMERGENCY DUE TO ABNORMAL LANDING CONFIGURATION. THE SIC BRIEFED THE PASSENGERS ON THE SITUATION. AFTER LANDING, TAXIED OFF THE RUNWAY INTO A RUN-UP AREA SHUT THE AIRCRAFT DOWN. MET WITH FIRE DEPARTMENT LOOKED AT THE TIRES AND BRAKES , NOTICED NO SMOKE OR FIRE. AIRPORT OFFICIAL SAID THEY SAW NO SMOKE ON LANDING. REQUESTED THE THAT FIRE TRUCK FOLLOWED US TO THE FBO, TO MONITOR THE TIRE AND BRAKES. TAXIED FROM RUN-UP AREA TO THE FBO WITH FIRE TRUCK IN TRAIL. SHUTDOWN AT FBO, FIRE TRUCK LEFT. WROTE THE AIRCRAFT UP USING COMPANY SQ-1 FORM AS FLAPS FAILED IN HE 15 DEGREE POSITION. AFTER THE AIRCRAFT CAME TO A STOP, FLAPS MOVED AS COMMANDED.

2007FA0000510	HUGHES	LYC	LOCK NUT	BACKED OUT
6/18/2007	269C	HIO360*	269A6029	T/R GEARBOX

DURING GROUND RUNUP, PILOT NOTICED TAIL ROTOR NOT SPINNING. AIRCRAFT SHUTDOWN AND RETURNED TO HANGER. UPON DISASSEMBLY IT WAS NOTED THAT THE NUT PN 269A6029 THAT ATTACHES THE DRIVE COUPLING TO THE GEARBOX HAD BACKED OUT COMPLETELY AND WORN A HOLE THROUGH THE ALUMINUM BUMPER PN 269A5712 THAT IS INSIDE THE TAIL ROTOR DRIVESHAFT. THREADS INSIDE THE TAIL ROTOR GEARBOX INPUT SHAFT PN 269A5626-5 WERE ALSO DAMAGED. PARTS WERE FORWARDED TO MFG FOR EVALUATION.

CA070515006	HUGHES	LYC	BRACKET	BROKEN
5/1/2007	269C1	HO360C1A	LW10382	ALTERNATOR

(CAN) ALTERNATOR BRACKET BROKEN. REPLACED BRACKET WITH NEW PART PN LW10382. (TC NR 20070515006)

CA070508003	HUGHES	ALLSN	PIN	BENT
5/8/2007	369D	250C20B	369X10045	MAIN ROTOR

(CAN) DURING AN INSPECTION THE ENGINEER NOTICED THE THE M/R BLADE FOLDING PIN LOOKED BENT. UPON TAKING THE UNIT APART HE NOTICED THAT THE THREADS OF THE PIN WERE NOT ON THE PIN STRAIGHT, KIND OF LOPSIDED. (TC NR 20070508003)

CA070522002	HUGHES	ALLSN	HUGHES	STRUT	CRACKED
5/19/2007	369E	250C20B	369H600132	369H60022	MLG

(CAN) DURING AN ANNUAL INSPECTION OF THE AIRCRAFT IT WAS NOTICED THAT THE LANDING GEAR HAD SOME PLAY IN IT. UPON FURTHER INSPECTION THE ENGINEER FOUND THAT THE BRACE TO STRUT BOLT HAD SOME SLOP IN IT. THE ENGINEER REMOVED THE BRACE BOLT AND FOUND 3 CRACKS EMMITTING FROM THE BLACE BOLT HOLE ON THE AFT RT LANDING GEAR STRUT. ONE CRACK ON THE TOP OF THE STRUT AND 2 CRACKS ON THE BOTTOM OF THE STRUT. (TC NR 20070522002)

2007FA0000486	ISRAEL	GARRTT	ACTUATOR	MISALIGNED
5/30/2007	1124	TFE731*	1391T1008	FLAP

INSTALLED REBUILT FLAP ACTUATOR IN RT OB POSITION; PN 1391T100-8, SN 387AB. FLAP OPERATION WAS NORMAL. WHILE CHECKING AILERON TRAVELS IT WAS DISCOVERED THAT AILERON TRAVELS WERE LIMITED BY THE REBUILT FLAP ACTUATOR. A COVER PLATE ON THE FLAP ACTUATOR HAD BEEN INDEXED INCORRECTLY AND WAS INTERFERING WITH THE AILERON BELLCRANK. PROBABLE CAUSE WAS INCORRECT ASSEMBLY OF FLAP ACTUATOR.

2007FA0000487	ISRAEL	GARRTT	ACTUATOR	MISALIGNED
5/30/2007	1124	TFE731*	1391T1008	FLAP

INSTALLED REBUILT FLAP ACTUATOR IN RT OB POSITION; PN 1391T100-8, SN 387AB. FLAP OPERATION WAS NORMAL. WHILE CHECKING AILERON TRAVELS IT WAS DISCOVERED THAT AILERON TRAVELS WERE LIMITED BY THE REBUILT FLAP ACTUATOR. A COVER PLATE ON THE FLAP ACTUATOR HAD BEEN INDEXED INCORRECTLY AND

WAS INTERFERING WITH THE AILERON BELLCRANK. PROBABLE CAUSE WAS INCORRECT ASSEMBLY OF FLAP ACTUATOR.

2007FA0000437	ISRAEL	GARRTT	SKIN	CORRODED
5/22/2007	1124	TFE73131G		FUSELAGE

FOUND SEVERE PITTING CORROSION ON BOTH THE LT AND RT SIDES BETWEEN FRAME STATIONS 184 AND 194 BELOW EMERGENCY ESCAPE DOORS. THIS IS DUE TO WATER LEAKING AROUND THE EMERGENCY ESCAPE DOORS AND SOAKING THE SOUND DAMPENING INSULATION. THE PITTING WAS SO BAD IT CORRODED THROUGH THE SKIN ON THE RT SIDE. THIS CORROSION WAS FOUND DURING AN RVSM INSTALLATION WHILE WE WERE MARKING OUT THE CRITICAL REGION AROUND THE STATIC PORTS. REPAIRED THE DAMAGE FOLLOWING APPROVED DATA FROM A STRUCTURAL ENGINEER AND RETURNED TO SERVICE IAW FAA FORM 8110-3.

2007FA0000404	ISRAEL	GARRTT	SKIN	CORRODED
5/22/2007	1124	TFE73131G		FUSELAGE

FOUND SEVERE PITTING CORROSION ON BOTH THE LT AND RT SIDES BETWEEN FRAME, STATIONS 184 AND 194 BELOW EMERGENCY ESCAPE DOORS. BELIEVE THIS IS DUE TO WATER LEAKING AROUND THE EMERGENCY ESCAPE DOORS AND SOAKING THE SOUND DAMPENING INSULATION. THE PITTING WAS SO BAD IT CORRODED THROUGH THE SKIN ON THE RT SIDE. THIS CORROSION WAS FOUND DURING AN RVSM INSTALLATION WHILE WE WERE MARKING OUT THE CRITICAL REGION AROUND THE STATIC PORTS. WE REPAIRED THE DAMAGE FOLLOWING APPROVED DATA FROM A STRUCTURAL ENGINEER AND RETURNED TO SERVICE IAW FAA FORM 8110-3.

2007FA0000405	ISRAEL	GARRTT	SKIN	CORRODED
5/22/2007	1124	TFE73131G		FUSELAGE

FOUND SEVERE (PITTING CORROSION) ON BOTH THE LT AND RT SIDES BETWEEN FRAME, STATIONS 184 AND 194 BELOW EMERGENCY ESCAPE DOORS. THIS IS DUE TO WATER LEAKING AROUND THE EMERGENCY ESCAPE DOORS AND SOAKING THE SOUND DAMPENING INSULATION. THE PITTING WAS SO BAD IT CORRODED THROUGH THE SKIN ON THE RT SIDE. THIS CORROSION WAS FOUND DURING AN RVSM INSTALLATION WHILE WE WERE MARKING OUT THE CRITICAL REGION AROUND THE STATIC PORTS. REPAIRED THE DAMAGE FOLLOWING APPROVED DATA FROM A STRUCTURAL ENGINEER AND RETURNED TO SERVICE IAW FAA FORM 8110-3.

2007FA0000468	ISRAEL		WINDSHIELD	CRACKED
5/1/2007	ASTRASPX		D25W343001009	COCKPIT

THE WINDSHIELD ON THE PILOT`S SIDE CRACKED DURING FLIGHT AT F/L 41,000 FT ON 4/24/2007. THE WINDSHIELD HAD 3104.6 TT. (K)

2007FA0000495	LANCAR	CONT	HARTZL	HEATER	DEBONDED
6/6/2007	LC40550FG	TSIO550C		SMR2263	PROP BLADES

INBOARD PORTION OF ALL THREE PROP DEICE BOOTS DEBONDED AGAIN. ON THIS PROP, NEW BLADES WERE SENT FROM HARTZELL DUE TO DEBOND OF PREVIOUS BOOTS AT 28.4 HRS TT AND AGAIN AT 28.9 HRS TT. RETAINER STRAP AND BOOT DEBONDS DUE TO CENTRIFUGAL FORCE PULLING DEICE BOOT LEAD ON EACH PROP BLADE. THIS HAS HAPPENED ON FIVE OR MORE LANCAIR COLUMBIA AIRCRAFT. THE SEALING PROCESS FOR THE RETAINER STRAP IS LACKING. SMR TECHNOLOGIES AND HARTZELL NEED A BETTER STRAP OR A GOOD TY-RAP.

CA070510005	LEAR	GARRTT	TURBINE BLADES	DAMAGED
5/7/2007	45LEAR	TFE7312		ENGINE

(CAN) DURING POST/PREFLIGHT INSPECTION, MAINTENANCE PERSONNEL NOTICED NICKS ON 2 OF THE 3RD STAGE TURBINE BLADES. NO FOD DAMAGE WAS NOTICED ON THE COMPRESSOR END OF THE ENGINE, SUSPECT FIRST STAGE BLADE RETAINER COMING LOOSE FROM TURBINE DISC AS ON SDR NR 20061110007 AND SDR NR 20060618001. WILL NOTIFY WHEN HAVE CONFIRMATION. ENGINE HAS BEEN REMOVED AND SENT TO AN HEAVY MAINTENANCE FACILITY FOR INVESTIGATION AND REPAIR. A RENTAL ENGINE HAS BEEN INSTALLED AND THE AIRCRAFT RETURNED TO SERVICE. (TC NR 20070510005)

CA070529001	LEAR	GARRTT	GARRTT	TURBINE BLADES	MISSING

5/29/2007	45LEAR	TFE7312	TFE73120R1B	30606901	RT ENGINE

(CAN) DURING A DAILY INSPECTION, IT WAS NOTICED BY THE TECHNICIAN THAT A PIECE OF A BLADE FROM THE RT ENGINE TURBINE WAS MISSING. NO DIFFICULTIES HAD BEEN REPORTED BY THE FLIGHT CREW AND NO OTHER DAMAGE HAS BEEN NOTED ON THE ENGINE. THE ENGINE WILL BE REMOVED AND SENT FOR REPAIR TO AN OUTSIDE ENGINE SHOP. (TC NR 20070529001)

CA070514040	LEAR	PWA	FAN BLADE	FRACTURED
3/31/2007	60LEAR	PW305A		ENGINE

(CAN) DURING CRUISE, THE ENGINE EMITTED A LOUD NOISE AND HIGH VIBRATIONS AND SHUTDOWN. SUBSEQUENT INSPECTION REVEALED A FRACTURED LOW PRESSURE COMPRESSOR FAN BLADE, DAMAGE TO THE ENGINE NACELLE INLET, MISSING ENGINES COWLS AND ASSOCIATED AIRFRAME IMPACT DAMAGE. MFG WILL INVESTIGATE THE EVENT AND ADVISE OF ROOT CAUSE ONCE ESTABLISHED. (TC NR 20070514040)

CA070514044	LEAR	PWA	FADEC	FAULTY
4/3/2007	60LEAR	PW305A	31B474707	ENGINE

(CAN) THE ENGINE EXPERIENCED AN UNCOMMANDED POWER REDUCTION DURING DESCENT AND WOULD NOT RESPOND TO THROTTLE INPUT. THE ENGINE WAS SHUTDOWN IN FLIGHT. THE ELECTRONIC ENGINE CONTROL (FADEC) WAS SUBSEQUENTLY REPLACED. (TC NR 20070514044)

CA070601001	LKHEED	ALLSN	SKIN	CRACKED
5/28/2007	382G	501D22A		FUSELAGE

(CAN) DURING PRE-FLIGHT CHECK PRIOR TO DEPARTING, CRACKING WAS OBSERVED IN THE AFT FUSELAGE SKIN IN THE AREA OF STATION 946. THE AIRCRAFT HAS BEEN FERRIED FOR REPAIR. (TC NR 20070601001)

CA070504006	LKHEED	ALLSN	FITTING	CRACKED
5/1/2007	382G	501D22A	36058711	TRUNNION SUPPORT

(CAN) DURING INSPECTION, A CRACKED LT NLG TRUNNION SUPPORT WAS DETECTED AND THE AIRCRAFT IS CURRENTLY UNDERGOING REPLACEMENT OF THE FITTING. (TC NR 20070504006)

CA070514001	LKHEED	ALLSN	UNKNOWN	CRACKED
5/11/2007	382G	501D22A		CARGO BAY

(CAN) AT FL220 APPROXIMATELY 20 MINUTES FROM DESTINATION THE AIRCRAFT EXPERIENCED A LOSS OF PRESSURIZATION. THE CREW DESCENDED TO 10,000 AND THE AIRCRAFT CONTINUED AND LANDED WITHOUT FURTHER PROBLEM. INVESTIGATION DETERMINED THE SOURCE OF THE PRESSURIZATION TO BE A CRACK MIDWAY IN THE RT EDGE OF THE UPPER CARGO. (TC NR 20070514001)

CA070503004	MTSBSI	GARRTT	FUEL CONTROL	WORN
4/26/2007	MU2B36	TPE33110	89777026	ENGINE

(CAN) ENGINE WAS SHUTDOWN DUE TO ABNORMAL INDICATIONS. ENGINE REMOVED AND SENT TO OVERHAUL FACILITY, FCU AND FUEL PUMP REMOVED, DAMAGE FOUND TO THE FUEL CONTROL QUILL SHAFT AND THE STUB SHAFT INTERNAL SPLINES. FCU AND FUEL PUMP REPLACED. NOTE: FCU HAD 780.4 HOURS SINCE LAST SPLINE INSPECTION. NOTE: FUEL PUMP P/N 897400-5 WAS REPLACED AT THIS TIME DUE TO SPLINE CHECK OUT OF LIMITS. (TC NR 20070503004)

CA070514047	PIAGIO	PWA	TURBINE BLADES	FRACTURED
4/11/2007	P180	PT6A66		TURBINE SECTION

(CAN) DURING CLIMB, THE ENGINE EMITTED A NOISE AND ENGINE PARAMETERS WERE SEEN TO FLUCTUATE. THE ENGINE WAS SHUTDOWN IN FLIGHT. SUBSEQUENT INSPECTION REVEALED FRACTURED POWER TURBINE BLADES. (TC NR 20070514047)

CA070511004	PILATS		RELAY	MALFUNCTIONED
4/5/2007	PC1245		9740926112	MLG

(CAN) ON A RETURN FLIGHT, GEAR DOWN WAS SELECTED BY PILOT. AFTER GEAR DOWN AND LOCKED, THE

HYDRAULIC PUMP REMAINED OPERATING. PILOT LANDED AIRCRAFT AND MAINTENANCE WAS NOTIFIED. DURING TROUBLESHOOTING MAINTENANCE DISCOVERED WHEN POWER APPLIED TO AIRCRAFT, THE HYDRAULIC PUMP REMAINED OPERATIONAL. PULLING THE HYDRAULIC CONTROL 5 AMP CIRCUIT BREAKER HAD NO EFFECT. THIS LED MAINTENANCE TO THE K601 RELAY WHERE IT WAS FOUND THAT THE CONTACTS WERE STUCK. CONSEQUENTLY THE ONLY WAY TO SHUT THE PUMP OFF WAS WITH THE BATTERY MASTER SWITCH. AFTER REPLACEMENT OF THE RELAY, SYSTEM OPERATED NORMALLY. (TC NR 20070511004)

CA070314009	PILATS	PWA	ENGINE	FLAMED OUT
1/29/2007	PC1245	PT6A6		

(CAN) DURING ATTITUDE RECOVERY TRAINING, THE ENGINE FLAMED OUT. THE ENGINE WAS SUCCESSFULLY RE-STARTED IN FLIGHT BUT SUFFERED AN OVER TEMPERATURE DURING THE RE-LIGHT. MFG WILL INVESTIGATE THE EVENT AND ADVISE OF ROOT CAUSE ONCE ESTABLISHED. (TC NR 20070314009)

CA070314008	PILATS	PWA	ACTUATOR	FROZEN
3/13/2007	PC1245	PT6A67B	9787320309	TE FLAPS

(CAN) FLAP ACTUATOR WOULD TEMPORARILY FREEZE/SEIZE AT THE END OF A FLIGHT WHILE WAITING ON THE GROUND AT OAT-5-12C. AFTER WARMING A/C, FLAPS WOULD RESET AND FUNCTION NORMALLY. ACTUATOR REMOVED FROM SERVICE. FLAP WARNING UNIT FAILURE CODES INDICATED HIGH CURRENT DRAW. FLAPS SYSTEM TESTED WITHIN CURRENT DRAW LIMITS AFTER REPLACEMENT OF ACTUATOR. MFG TECH REP HAS REQUESTED TEARDOWN REPORTS. (TC NR 20070314008)

CA070314010	PILATS	PWA	ROD END	LOOSE
3/13/2007	PC1245	PT6A67B		ACTUATOR

(CAN) ROD END WAS FOUND LOOSE/WORN OUT ON OVERHAULED ACTUATOR. TEMPORARILY INSTALLED IN AIRCRAFT WHILE AWAITING REPLACEMENT. REMOVED WITH 16.8 HRS TSO BEFORE RETURNING TO SUPPLIER. (TC NR 20070314010)

CA070320009	PILATS	PWA	BEARING	DETERIORATED
3/20/2007	PC1245	PT6A67B	9408308902	ACCESSORY DRIVE

(CAN) TRYING TO DIAGNOSE A NR 2 GENERATOR HOUSING DRAIN LINE OIL LEAK ,THE NR 2 GEN HOUSING ASSY WAS REMOVED TO REPLACE THE ENGINE ACCESSORY DRIVE SEAL WHICH WAS SUSPECT LEAKING. UPON REASSEMBLY OF NR 2 GEN HOUSING PLAY WAS NOTED ON PULLEY END OF DRIVE SHAFT. DISASSEMBLY REVEALED THAT THE OUTER BEARING P/N:940.83.08.902 OR P202PP/FS5000 HAD BEGUN TO DISINTEGRATE. THERE WERE 3 BALLS MISSING AND THE REMAINING BALLS STILL WERE CARRYING LOAD. THERE WAS ENOUGH SIDE PLAY IN THE SHAFT WHICH WOULD CAUSE THE SHAFT NOT TO RUN TRUE WHICH IN TURN CAUSED THE ENGINE ACCESSORY SEAL TO FAIL. ALL AFFECTED PARTS REPLACED WITH NEW AND OIL LEAK IS GONE. (TC NR 20070320009)

CA070326002	PILATS	PWA	RELAY	MALFUNCTIONED
3/22/2007	PC1245	PT6A67B		TRIM SYS

(CAN) A/C WAS CLIMBING OUT. THE PILOT MADE A MANUAL TRIM UP SELECTION WHEN A HZ STAB TRIM RUNAWAY OCCURRED. THE PILOT SELECTED THE TRIM INTERRUPT SWITCH TO STOP THE RUNAWAY AND RETURNED. THE TRIM RELAY K 022 WAS REPLACED AND SYSTEM WAS GROUND CHECKED SERVICEABLE AND THE A/C RETURNED TO SERVICE. NO FURTHER PROBLEMS HAVE BEEN REPORTED. (TC NR 20070326002)

2007FA0000411	PILATS	PWA	BOLT	BROKEN
5/15/2007	PC1245	PT6A67B	5321012110	LANDING GEAR

DURING A 100 HOUR INSPECTION, A VISUAL INSPECTION FOUND A BROKEN BOLT ON THE RT MLG. THE BOLT ATTACHED THE LOWER PART OF THE SHOCK ABSORBER TO LANDING GEAR LEG. THE PN OF THE BOLT IS MOST LIKELY 532.10.12.110. THERE IS A LATER PN 532.10.12.205 BUT THIS WAS PROBABLY NOT THE PART INSTALLED. THEIR WAS NO MARKING ON THE BOLT ITSELF MAKING IT DIFFICULT TO DETERMINE THE PN. THIS PROBLEM WAS PREVIOUSLY ADDRESSED BY AD 04-06-05 AND SB 32-015, BUT THIS AIRCRAFT AND SN OF THE LANDING GEAR IN QUESTION ARE WELL BEYOND THE AFFECTIVITY OF BOTH THE AD AND THE SB.

2007FA0000412	PILATS	PWA	BOLT	BROKEN

5/15/2007	PC1245	PT6A67B	5321012110	LANDING GEAR

DURING A 100 HOUR INSPECTION, A VISUAL INSPECTION FOUND A BROKEN BOLT ON THE RT MLG. THE BOLT ATTACHED THE LOWER PART OF THE SHOCK ABSORBER TO LANDING GEAR LEG. THE PN OF THE BOLT IS MOST LIKELY 532.10.12.110. THERE IS A LATER PN 532.10.12.205 BUT THIS WAS PROBABLY NOT THE PART INSTALLED. THEIR WAS NO MARKING ON THE BOLT ITSELF MAKING IT DIFFICULT TO DETERMINE THE PN. THIS PROBLEM WAS PREVIOUSLY ADDRESSED BY AD 04-06-05 AND SB 32-015, BUT THIS AIRCRAFT AND SN OF THE LANDING GEAR IN QUESTION ARE WELL BEYOND THE AFFECTIVITY OF BOTH THE AD AND THE SB.

2007FA0000413	PILATS	PWA	BOLT	BROKEN
5/15/2007	PC1245	PT6A67B	5321012110	ZONE 700

DURING A 100 HOUR INSPECTION, A VISUAL INSPECTION FOUND A BROKEN BOLT ON THE RT MLG. THE BOLT ATTACHED THE LOWER PART OF THE SHOCK ABSORBER TO LANDING GEAR LEG. THE PN OF THE BOLT IS MOST LIKELY 532.10.12.110. THERE IS A LATER PN 532.10.12.205 BUT THIS WAS PROBABLY NOT THE PART INSTALLED. THEIR WAS NO MARKING ON THE BOLT ITSELF MAKING IT DIFFICULT TO DETERMINE THE PN. THIS PROBLEM WAS PREVIOUSLY ADDRESSED BY AD 04-06-05 AND SB 32-015, BUT THIS AIRCRAFT AND SN OF THE LANDING GEAR IN QUESTION ARE WELL BEYOND THE AFFECTIVITY OF BOTH THE AD AND THE SB.

2007FA0000414	PILATS	PWA	BOLT	BROKEN
5/15/2007	PC1245	PT6A67B	5321012110	ZONE 700

DURING A 100 HOUR INSPECTION, A VISUAL INSPECTION FOUND A BROKEN BOLT ON THE RT MLG. THE BOLT ATTACHED THE LOWER PART OF THE SHOCK ABSORBER TO LANDING GEAR LEG. THE PN OF THE BOLT IS MOST LIKELY 532.10.12.110. THERE IS A LATER PN 532.10.12.205 BUT THIS WAS PROBABLY NOT THE PART INSTALLED. THEIR WAS NO MARKING ON THE BOLT ITSELF MAKING IT DIFFICULT TO DETERMINE THE PN. THIS PROBLEM WAS PREVIOUSLY ADDRESSED BY AD 04-06-05 AND SB 32-015, BUT THIS AIRCRAFT AND SN OF THE LANDING GEAR IN QUESTION ARE WELL BEYOND THE AFFECTIVITY OF BOTH THE AD AND THE SB.

CA070503009	PILATS	PWA	ACTUATOR	INOPERATIVE
4/22/2007	PC1245	PT6A67B	9787314203	PITCH TRIM

(CAN) THE SECONDARY ELECTRIC MOTOR, WHICH ACTUATES THE PITCH TRIM ACTUATOR IN RESPONSE TO AUTO PILOT COMMANDS WAS NOT OPERATIVE. THIS RENDERED THE AUTOPILOT SYSTEM U/S. THE ACTUATOR WAS REPLACED AND THE SYSTEM WAS CHECKED AIRWORTHY. THE O/H INTERVAL ON THESE ACTUATORS IS 6000 HRS. OR 5 YEARS INSTALLED TIME. (TC NR 20070503009)

CA070525002	PILATS	PWA	PWC	BOLT	FAILED
5/11/2007	PC1245	PT6A67B	311276701	MS949034	ENGINE

(CAN) ENGINE WAS REMOVED AFTER THE PILOT REPORTED THAT A LOUD BANG AND SHUDDER WAS EXPERIENCED BY THE AIRCRAFT DURING CLIMB IN AUTOPILOT NEAR TAKEOFF POWER APPROXIMATELY 5 MINUTES AFTER TAKEOFF AT 6000 FT. THE REDUCTION GEARBOX CHIP DETECTOR WAS ILLUMINATED AND THE AIRCRAFT RETURNED BACK TO BASE AT LOW POWER WITH NO OTHER ABNORMALITIES OBSERVED. ALL GROUND OPERATIONS WERE NORMAL. THE DATE OF THE INCIDENT WAS MAY 11, 2007. DURING INVESTIGATION DISMANTLE OF THE POWER SECTION AND FIRST-STAGE REDUCTION CARRIER ASSEMBLY, OF (6) MACHINE HEX BOLTS (IPC P/N 3038338, CH. 72-11-00, FIGURE 4, ITEM 200, P/N MS9490-34) WAS FOUND WITHOUT THE BOLT HEAD ATTACHED. NOTE THAT THE CARRIER HEX BOLTS SECURE THE FIRST-STAGE CARRIER AND THE FIRST-STAGE REDUCTION SPLINED ADAPTER. (SEE ATTACHMENT) THERE ARE A QUANTITY OF SIX HEX BOLTS INSTALLED WITH KEYWASHERS AND ARE TORQUED 75 TO 85 IN.LB. ENGINE OVERHAUL RECORDS INDICATE THAT QUANTITY SIX BOLTS WERE REPLACED WITH NEW ONES DURING ENGINE OVERHAUL. THIS IS THE FIFTH CASE THAT HAS COME TO OUR ATTENTION SINCE APRIL 2004. (TC NR 20070525002)

CA070516003	PILATS	PWA	SOLENOID	STUCK
5/14/2007	PC1245	PT6A67B		FEATHERING SYS

(CAN) PILOT INITIATED START FOLLOWING TURNAROUND AND NOTICED PROP RPM FOLLOWING START WAS ONLY AT 500 RPM AND NOT AT THE NORMAL, ABOVE 1000 RPM AT ENGINE IDLE. ALSO HAD EIS FLASHING AMBER AND RED ON EIS AS PROP WAS OPERATING BELOW 950 RPM. PROP WAS NOT COMING OUT OF FEATHER POSITION. PILOT SHUTDOWN ENGINE. INVESTIGATION REVEALED A STUCK OPEN PROP FEATHERING SOLENOID WHICH DID NOT ALLOW UNFEATHERING OF PROP. ONCE SOLENOID COOLED DOWN SOLENOID FUNCTIONED

NORMALLY. REPLACED OVERSPEED GOVERNOR WITH REPAIRED AND TESTED UNIT. (TC# 20070516003)

2007FA0000531	PILATS	PWA		FLEX DRIVE	BROKEN
6/15/2007	PC1245	PT6A67B		9450202205	TE FLAPS

DURING APPROACH WHEN THE FLAPS WERE SELECTED TO 15 DEGREES THE FLAPS FAILED TO EXTEND AND A FLAP CAUTION ANNUNCITOR WAS DISPLAYED ON THE CAWS PANEL. THE FLIGHT CREW FOLLOWED THE APPROPRIATE POH PROCEDURES AND LANDED UNEVENTFULLY. INVESTIGATION INTO THE FLAP PROBLEM AFTER THE AIRCRAFT LANDED DETERMINED THAT THE LT IB FLAP FLEX DRIVE PN 945.02.02.205, SN S2532, HAD BROKEN JUST IB OF THE LT IB FLAP ACTUATOR.

CA070514041	PILATS	PWA		DRIVE SHAFT	SHEARED
3/27/2007	PC7	PT6A25	9682011739		FCU

(CAN) THE ENGINE WAS FOUND NOT TO RESPOND TO THROTTLE INPUT AND SUBSEQUENTLY ACCELERATED UNCOMMANDED. THE ENGINE WAS SHUTDOWN ON APPROACH. SUBSEQUENT INSPECTION REVEALED A SHEARED FUEL CONTROL UNIT DRIVE SHAFT. (TC NR 20070514041)

2007FA0000513	PIPER		ACK	CONNECTOR	MISSING
6/8/2007	PA16		E01ELT	E0109	ELT

DURING 100 HOUR INSPECTION IT WAS NOTED THAT THE BNC CONNECTOR ATTACHED TO THE ELT PORTABLE ANTENNA WAS MISSING. AN IN-DEPTH SEARCH OF THE AIRCRAFT BELLY FAILED TO TURN UP THE CONNECTOR. THE CONNECTOR IS ATTACHED TO THE PORTABLE COLLAPSIBLE ANTENNA BY A 6-32 SCREW IN THE BOTTOM OF THE ANTENNA. THERE IS NO PROVISION TO LOCK THIS THREADED ATTACHMENT.

CA070427007	PIPER	LYC		LINK	BROKEN
4/25/2007	PA23250	IO540C4B5		16667000	NOSE GEAR

(CAN) DURING GEAR RETRACTION THE PILOTS DID NOT GET A GEAR UP AND SAFE LIGHT, UPON VISUALLY INSPECTING THE GEAR WITH THE MIRRORS THE NOSE GEAR WAS SEEN TO BE DANGLING AT AN APPROXIMATE 60 DEGREE ANGLE. GEAR WAS SELECTED DOWN, DOWN AND LOCKED INDICATION WAS PROVIDED AND THE AIRCRAFT LANDED UNEVENTFULLY. DURING INSPECTION OF THE GEAR SYSTEM THE NOSE GEAR DOWN LOCK LINK ASSEMBLIES WERE FOUND TO BE BROKEN IN HALF. THEY ARE MADE OF STEEL. THE LINK ASSEMBLIES WERE REPLACED NEW AND THE GEAR SWUNG NUMEROUS TIMES SATISFACTORILY. (TC NR 20070427007)

2007FA0000484	PIPER	LYC		CARBURETOR	WORN
5/25/2007	PA24	O360*		MA45	ENGINE

THE ACCELERATOR PUMP IN THE CARBURETOR FAILED. INSPECTION SHOWED THAT THE PUMP HEAD GLAND HAD SHRUNK, SO THAT IT DID NOT PROVIDE A SEAL BETWEEN THE CARBURETOR BODY AND THE PUMP ITSELF. THE RESULT WAS THAT ADVANCING THE THROTTLE DID NOT CAUSE FUEL TO BE SQUIRTED FROM THE PUMP EXIT ORIFICE. REPLACEMENT OF THE PUMP RESOLVED THE PROBLEM.

2007FA0000485	PIPER	LYC		CARBURETOR	WORN
5/25/2007	PA24	O360*		MA45	

THE ACCELERATOR PUMP IN THE CARBURETOR FAILED. INSPECTION SHOWED THAT THE PUMP HEAD GLAND HAD SHRUNK, SO THAT IT DID NOT PROVIDE A SEAL BETWEEN THE CARBURETOR BODY AND THE PUMP ITSELF. THE RESULT WAS THAT ADVANCING THE THROTTLE DID NOT CAUSE FUEL TO BE SQUIRTED FROM THE PUMP EXIT ORIFICE. REPLACEMENT OF THE PUMP RESOLVED THE PROBLEM.

2007FA0000480	PIPER	LYC		SPAR CAP	CORRODED
5/23/2007	PA28140	O320*		6707003	RT WING

FUEL TANK REMOVED DUE TO LEAKING VENT LINES. UPON REMOVAL, DISCOVERED RT WING UPPER SPAR CAP SEVERLY CORRODED. MAJOR EXFOLIATION TO THE SPAR CAP AT THE OB SECTION OF THE FUEL TANK OPENING.

2007FA0000525	PIPER	LYC	SLICK	ROTOR	SHEARED
6/15/2007	PA28161	O320D3G	4370	M3548	MAGNETO

RIGHT MAGNETO ROTOR SHEARED DIRECTLY UNDER THE MAGNETO CAM. SECOND IDENTICAL FAILURE IN 335 HRS ON THE AIRCRAFT. AIRCRAFT DYNAMIC PROP BALANCE WAS CHECKED AFTER THIS FAILURE AND CHECKED EXCELLENT.

2007FA0000526	PIPER	LYC	CHRYSLER	TERMINAL	LOOSE
6/15/2007	PA28180	O360A4A			ALTERNATOR

217 HOURS AFTER OVERHAUL, THE OUTPUT TERMINAL BECAME LOOSE IN THE BUSS STRAP INSIDE THE ALTERNATOR, CAUSING COMPLETE FAILURE. LIKELY THIS FIT (NORMALLY A PRESS FIT) WAS NOT AS TIGHT AS IT NEEDED TO BE WHEN THIS UNIT LEFT KELLY.

2007FA0000420	PIPER	BATTERY BOX	BROKEN
5/10/2007	PA28181	352020035201	

PLASTIC BATTERY BOX BROKE INTO SEVERAL PIECES. LID WOULD NO LONGER HOLD SECURLY ON THE BOX ALLOWING BATTERY TO BE UNSECURED IN THE AIRCRAFT. PIPER REPIORTED THAT P/N 35201-00 LID AND 35202-00 WAS NO LONGER AVAILABLE. INSTALLED STC'D BATTERY BOX TO REPLACE THE DAMAGED ONE.

2007FA0000482	PIPER	SPAR	CORRODED
5/23/2007	PA28R180	6205401	RT WING

RT WING REMOVED DUE TO DAMAGE. WING WAS SCRAPPED AND DEALER WANTED STEEL FITTINGS REMOVED. UPON REMOVAL OF REAR SPAR ATTACH PLATE, SEVERE CORROSION WAS FOUND ON THE SPAR UNDER THE PLATE. CONDITION WAS VERY SERIOUS AND COULD HAVE LEAD TO AN INFLIGHT FAILURE.

CA070503005	PIPER	LYC	DRIVE GEAR	FAILED
4/13/2007	PA31	TIO540A2B	76786	CRANKSHAFT

(CAN) LT ENGINE FAILED IN CRUISE FLIGHT. AIRCRAFT RETURNED TO BASE. ENGINE REMOVED AND REPLACED. THE ACCESSORY CASE WAS REMOVED AND FOUND THAT THE CRANKSHAFT DRIVE GEAR HAD FAILED (TEETH STRIPPED OFF DRIVE GEAR). (TC NR 20070503005)

CA070327008	PIPER	LYC	ENGINE	FAILED
3/12/2007	PA31	TIO540A2C		

(CAN) ENGINE FAILURE, PROP STOPPED IN FLIGHT. NO EXTERNAL DAMAGE TO ENGINE. SUSPECT CRANKSHAFT FAILURE. (TC NR 20070327008)

CA070327005	PIPER	LYC	PROXIMITY SWITCH	FAILED
3/22/2007	PA31325	TIO540F2BD	487862	MLG

(CAN) MAINTENANCE COULD NOT DUPLICATE FAULT ON GROUND WITH AIRCRAFT ON JACKS. CYCLED GEAR 20 TIMES FAULT FREE. WIRING CHECKED,OK, RIGGING CHECKED OK, HYDRAULIC POWER PACK CHECKED, OK. CORRECTIVE ACTION TO REPLACE ALL 6 LANDING GEAR PROXIMITY SWITCHES. (TC NR 20070327005)

2007FA0000501	PIPER	LYC	MAIN BEARING	DELAMINATED
6/7/2007	PA31350	LTIO540J2BD	LW13683	ENGINE

CUSTOMER FOUND METAL IN FILTER DURING ROUTINE MAINTENANCE. TOOK ENG. APART AND FOUND 2 CENTER MAIN BRGS. WHERE DELAMINATED.

CA070503006	PIPER	LYC	SEAL	LEAKING
4/26/2007	PA31350	TIO540J2BD	C3317228	CRANKSHAFT

(CAN) RECEIVED ENGINE, AFTER A REPAIR FOR PREMATURE CAMSHAFT FAILURE (REF: SDR 20070319008). AFTER INSTALLATION AND RUN-UPS, AN OIL LEAK WAS DISCOVERED AT THE CRANKSHAFT SEAL. WHEN THE SEAL WAS REMOVED IT WAS NOTED THAT IT WAS A (SPLIT) TYPE SEAL NOT THE ONE-PIECE AS CALLED FOR IN THE IPC. AFTER SPEAKING WITH REPAIR STATION, THEY AGREED TO COVER THE LABOR AND NEW SEAL COSTS. A NEW SEAL WAS INSTALLED AND THERE HAVE BEEN NO LEAKS SINCE. WE RETURNED THE DEFECTIVE SEAL, AS THEY REQUESTED IT FOR QUALITY PURPOSES. (TC NR 20070503006)

CA070508005	PIPER	LYC	HOUSING	CRACKED
5/4/2007	PA31350	TIO540J2BD	268028	HYD PUMP

(CAN) 2ND MAINTENANCE GROUND RUN WAS COMPLETED ON AIRCRAFT AND ENGINES SHUTDOWN. HAD LUNCH AND RETURNED TO A/C AND OBSERVED POOL OF HYDRAULIC FLUID BENEATH THE RT ENGINE. POST INSPECTION OF HYD PUMP REVEALED A CRACKED HOUSING. REPLACED THE HYDRAULIC PUMP. (TC NR 20070508005)

CA070514033	PIPER	LYC	BELT	LOOSE
4/29/2007	PA31350	TIO540J2BD	LW18129	ALTERNATOR

(CAN) PILOT NOTICED ALTERNATOR INOPERATIVE LIGHTS ILLUMINATE A FEW TIMES THEN STAYED ON, SO HE ELECTED TO LAND AT NEAREST AIRPORT. MAINTENANCE FOUND BOTH ALTERNATOR BELTS LOOSE, CAUSE WAS DETERMINED TO BE BELT STRETCH AND WEAR-IN DUE TO BOTH BELTS BEING REPLACED 25 HOURS PREVIOUSLY. (TC NR 20070514033)

CA070502009	PIPER	LYC	ENGINE	FAILED
4/10/2007	PA31350	TIO540J2BD		NR 2

(CAN) NR 2 ENGINE FAILED SEVEN MINUTES PRIOR TO LANDING AT AIRPORT. NR 2 CYLINDER DROPPED DOWN INSIDE THE COWLING AND APPROXIMATELY 2 QUARTS OF OIL WAS LOST. THE ENGINE WAS SECURED WITHIN A FEW SECONDS AND A LANDING WAS SAFELY EXECUTED AT AIRPORT. THE ENGINES WERE BOTH SET AT 31 INCHES HG, 2200 RPM AND APPROXIMATELY 1500F EGT, PRIOR TO THE NR 2 ENGINE FAILURE. THE FAILURE OCCURRED ON THE 30 MARCH 2007. (TC NR 20070502009)

CA070511003	PIPER	LYC	BUSHING	WORN
4/10/2007	PA31350	TIO540J2BD		ENGINE

(CAN) DURING CRUISE PORTION OF THE FLIGHT, THE PILOT NOTICED A VIBRATION FOLLOWED BY A NOISE AND LOSS OF OIL. THE PILOT SHUTDOWN THE ENGINE AND DIVERTED TO A NEARBY AIRPORT AND LANDED SAFELY. THE ENGINE WAS REMOVED AND SENT TO AN ENGINE SHOP FOR A TEARDOWN. IT WAS DETERMINED THAT THE COUNTERWEIGHT BUSHING WAS WORN THUS CAUSING EXCESSIVE PLAY. THIS EXCESSIVE PLAY CAUSED THE COUNTERWEIGHT CHEEK TO BREAK AND THE COUNTERWEIGHT COMING LOOSE INSIDE THE ENGINE WHICH CAUSED SUBSTANTIAL DAMAGE. THE POSSIBLE REASON FOR THE FAILURE COULD BE DUE TO ENGINE OVERSPEED AT SOMETIME OR ANOTHER. (TC NR 20070511003)

CA070321002	PIPER	LYC	BEARING	FAILED
3/20/2007	PA31350	TIO540J2BD		TURBOCHARGER

(CAN) RT ENGINE LOST BOOST AT ALTITUDE. PILOT ELECTED TO DESCEND TO LOWER ALTITUDE. AT LOWER ALTITUDE, RT ENGINE HAD NORMAL POWER. APPROXIMATELY 20 MINUTES LATER, RT OIL PRESSURE WAS OBSERVED LOWER THAN NORMAL. ENGINE WAS SECURED AND SHUTDOWN. UNEVENTFUL SINGLE-ENGINE LANDING WAS CARRIED OUT. (TC NR 20070321002)

CA070321004	PIPER	LYC	CRANKCASE	CRACKED
3/16/2007	PA31350	TIO540J2BD		ENGINE

(CAN) THE AIRCRAFT WAS BROUGHT INTO THE HANGAR DURING AN INTERMEDIATE STOP TO WORK ON SOME SNAGS. THE ENGINEER NOTICED A QUANTITY OF OIL ON THE OUTSIDE OF THE IB NACELLE OF THE RT ENGINE. AFTER CLEANING THE ENGINE AND RUNNING IT AGAIN A CRACK WAS NOTICED EMANATING FROM THE LOWER FORWARD STUD OF THE NR 2 CYLINDER. IT RAN FORWARD TO THE THREADED HOLE FOR THE PROP GOVERNOR BRACE. THE CRACK WAS NDT`D AND FOUND TO ALSO BE RUNNING BACKWARDS ALONG THE CASE UNDER THE STARTER AREA. IT ALSO RAN HALFWAY UP THE EDGE OF THE CYLINDER BOSS. THE ENGINE HAS GONE FOR REPLACEMENT OF THE CASE. (TC NR 20070321004)

CA070319008	PIPER	LYC	CAMSHAFT	WORN
3/15/2007	PA31350	TIO540J2BD		ENGINE

(CAN) THIS ENGINE WAS JUST PUT ON WING TO REPLACE AN ENGINE THAT HAD CAMSHAFT WEAR. DURING A ROUTINE INSPECTION THE OIL WAS DRAINED AND A SUBSTANTIAL AMOUNT OF FERROUS METAL WAS DISCOVERED IN THE FILTER. AN OIL SAMPLE WAS SENT IMMEDIATELY TO PROGRESSIVE FOR ANALYSIS. THEY

REPORTED BACK THAT IT WAS THE CAMSHAFT FAILING. WE ARE SENDING THE ENGINE TO THEM FOR TEARDOWN AND WILL NOT KNOW UNTIL THEN WHETHER IT IS AN OPERATIONAL PROBLEM OR A COMPONENT PROBLEM. (TC NR 20070319008)

CA070323005	PIPER	LYC	CONTROLLER	LEAKING
3/22/2007	PA31350	TIO540J2BD		FUEL SYSTEM

(CAN) DURING A TRAINING FLIGHT WHEN POWER WAS APPLIED, THE RT ENGINE ACCELERATED NORMALLY TO 40 INCHES AND THEN STARTED TO SURGE BETWEEN 20 AND FORTY INCHES. THE PILOT WAS ABLE TO STABILIZE THE ENGINE AT ABOUT 25 INCHES OF MANIFOLD PRESSURE. ALL GAUGES WERE NORMAL ALTHOUGH THEY COULD NOT GAIN ANY MORE THAN 30 INCHES OF MANIFOLD PRESSURE. A LOT OF BLACK SMOKE WAS OBSERVED UNDER THE WING OF THE AIRCRAFT. AS THE AIRCRAFT LANDED, THE RIGHT ENGINE QUIT. A QUANTITY OF FUEL WAS POURING OUT THE `SNIFFLE` VALVE OF THE ENGINE. MAINTENANCE REMOVED THE DENSITY AND DIFFERENTIAL CONTROLLERS. THE DENSITY CONTROLLER APPEARED TO HAVE AN INTERNAL LEAKAGE WHICH HAD CONTAMINATED BOTH THE DIFFERENTIAL CONTROLLER AND THE FCU WHICH WAS DOWNSTREAM OF THE DENSITY CONTROLLER. THE CONTROLLER'S LOSS OF OIL WOULD CREATE A FLUCTUATING WASTEGATE. THE ENGINE SHUTDOWN ON THE LANDING FLARE CREATED A SITUATION WHERE THE ENGINE WAS SETUP FOR RUNNING AND FUEL WOULD HAVE BEEN PUMPING INTO THE ENGINE EVEN THOUGH IT WAS NOT RUNNING. THIS WOULD HAVE CAUSED THE QUANTITY OF FUEL VENTED OVERBOARD. THE AIRCRAFT WAS FLOWN AFTER CHANGING BOTH SERVOS AND THE FCU WITHOUT PROBLEMS. (TC# 20070323005)

CA070514034	PIPER	PWA	FCU	FAULTY
3/26/2007	PA31T	PT6A135	32448094	ENGINE

(CAN) DURING CLIMB, ENGINE POWER INCREASED UNCOMMANDED, RESULTING IN A TORQUE EXCEEDANCE. THE ENGINE WAS SHUTDOWN IN FLIGHT. SUBSEQUENT INSPECTION REVEALED A FAULTY FUEL CONTROL UNIT. (TC NR 20070514034)

CA070314019	PIPER	PWA	LINE	FRACTURED
2/16/2007	PA46500TP	PT6A42	3033981	FCU

(CAN) THE ENGINE EXPERIENCED AN UNCOMMANDED POWER REDUCTION IN FLIGHT AND FLAMED OUT ON LANDING ROLL-OUT. SUBSEQUENT INSPECTION REVEALED A FRACTURED FUEL DELIVERY TUBE. (TC NR 20070314019)

2007FA0000457	PZLWAR	LYC	BLADE	CRACKED
5/16/2007	PZL104W35A	IO540K1B5	F8468A6R	PROPELLER

ALUMINUM FATIGUE CRACK VISUALLY AND NDT DETECTED. PROPELLER ASSY RECEIVED FOR OVERHAUL AND BLADE NR 2 OF 3 REMOVED FROM PROPELLER ASSY (HC-C3YR-1RF/ F8468A-6R, UNDER WO NR 38598A. NOTE: MANDATORY OVERHAUL REQUIRED DUE TO GROUND STRIKE, HOWEVER, BLADE SUBMITTED WAS NOT BENT AND LEAST DAMAGED. (K)

2007FA0000460	RAYTHN	WILINT	CONNECTOR	FAULTY
4/30/2007	390	FJ44	D3899924WD19	ANTI SKID SYS

TROUBLESHOT INTERMITTENT ANTI-SKID SYSTEM FAIL ANNUNCIATION, CABIN DOOR SEAL STAYING INFLATED ON GROUND, AND LIFT DUMP HANDLE OPERATION. FOUND BAD CRIMP ON PIN (L) FOR WIRE G117B24 IN LT MLG SQUAT SWITCH CONNECTOR. FUNCTIONAL CHECKS OK. (K)

CA070314021	RAYTHN	PWA	ENGINE	MAKING METAL
2/23/2007	G36	PT6A68		

(CAN) DURING A TRAINING MISSION, THE ENGINE EXPERIENCED AN UNCOMMANDED REDUCTION IN POWER ACCOMPANIED BY A NOISE AND A CHIP DETECTOR INDICATION. SUBSEQUENT INSPECTION REVEALED METALLIC DEBRIS IN THE ENGINE OIL SYSTEM. MFG WILL INVESTIGATE THE EVENT AND ADVISE OF ROOT CAUSE ONCE ESTABLISHED. (TC NR 20070314021)

CA070514010	RAYTHN	PWA	ENGINE	MAKING METAL
2/23/2007	G36	PT6A68		

(CAN) ON A TRAINING MISSION, THE ENGINE EXPERIENCED A LOSS OF THRUST (DURING TRAFFIC PATTERN STALLS) ACCOMPANIED BY A NOISE AND A CHIP DETECTOR INDICATION. THE PILOT DECLARED AN EMERGENCY AND ABORTED THE MISSION. SUBSEQUENT INSPECTION REVEALED METAL PARTICLES IN THE ENGINE OIL. MFG WILL INVESTIGATE THE EVENT AND ADVISE OF ROOT CAUSE ONCE ESTABLISHED. (TC NR 20070514010)

061371	RAYTHN	DIODE	OVERHEATED
6/13/2007	HAWKER800XP	NTE5916	LIGHTS

PILOT'S NOTED THAT LANDING AND TAXI PULSE LIGHT SYSTEM WAS INOPERATIVE ... LIGHTS WOULD NOT PULSE IN FLIGHT. SYSTEM HAD BEEN UPDATED PER RAYTHEON MANDATORY SERVICE BULLETIN 33-3682. UPON INSPECTION AND TROUBLE SHOOTING SYSTEM, THE CONNECTORS ATTACHED TO THE DIODES (CR1 THRU CR4) THAT WERE ADDED TO THE SYSTEM AS A RESULT OF THE BULLETIN, WERE LOOSE AND APPEAR TO HAVE OVERHEATED. IN DISCUSSIONS WITH RAYTHEON, IT WAS DETERMINED THAT POSITION OF THE DIODE INSULATORS ON PAGE 25 OR 39 OF THE SERVICE BULLETINS IS INCORRECT AND SHOWN OPPOSITE OF WHAT THEY SHOULD BE. AS A RESULT, THE THINNER INSULATOR CRACKS AND ALLOWS THE TERMINAL TO SHORT TO GROUND AND OVERHEAT. VISUALLY INSPECT DIODE PANEL AND VERIFY THAT THE THICKER OF THE TWO INSULATORS IS LOCATED ADJACENT TO THE TERMINAL AND VERIFY THAT TERMINALS HAVE NOT OVERHEATED AS INDICATED BY MELTED INSULATION OR DISCOLORATION AND ARE TIGHT.

CA070503003	RKWELL	LYC	CONNECTING ROD	BROKEN
5/3/2007	700	TIO540R2AD	LW19332S	ENGINE

(CAN) IT WAS REPORTED TO MAINTENANCE THAT THE RT ENGINE HAD EXPERIENCED SOME TROUBLE. THE ENGINE WAS SHUTDOWN (DURING FLIGHT) AND PROP WAS FEATHERED. THE AIRCRAFT COMPLETED THE FLIGHT TO THE NEAREST AIRPORT AND LANDED WITHOUT INCIDENT. THE PRELIMINARY INSPECTION INDICATES THAT THE NR 4 CYLINDER CONNECTING ROD BROKE THROUGH THE PISTON PIN HOLE. THIS PERMITTED THE PISTON TO BECOME DISLODGED AND THE CYLINDER ASSEMBLY WAS SUBSEQUENTLY FORCED FREE OF THE ENGINE BREAKING ALL THE CYLINDER BASE HOLD DOWN STUDS. THE ENGINE WILL REQUIRE MAJOR REPAIRS. (TC NR 20070503003)

CA070313006	RKWELL	LYC	CRANKSHAFT	BROKEN
3/8/2007	700	TIO540R2AD	13F1773585	ENGINE

(CAN) APPROXIMATELY 45 MILES OUT, THE CREW NOTED A VIBRATION FROM THE LT ENGINE. THE CREW SECURED THE ENGINE AND FEATHERED THE PROP IAW THE CHECK LIST. THE FLIGHT CONTINUED TO DESTINATION WITHOUT INCIDENT. WITH COWLING'S REMOVED, NOTED THE CASE HAD BEEN BREACHED AND THE CAMSHAFT HAD BROKEN. WITH NR 5 CYL. REMOVED WE COULD SEE THAT THE CRANKSHAFT WAS BROKEN AFT OF THE MAIN BEARING BETWEEN CYLINDER BANKS 2-4 AND 5-6. THIS PERMITTED THE CRANK SEGMENT WITH CONNECTING RODS FOR CYL`S 5 AND 6 TO FLAIL AROUND, BREAKING THE CRANKCASE AND CAMSHAFT. THE ENGINE WILL BE SENT OUT FOR FURTHER TEARDOWN. PARTS AVAILABLE FOR INSPECTION. (TC NR 20070313006)

2007FA0000503	ROBSIN	LYC	BEARING	ROUGH
6/18/2007	R22BETA	O320*	A04111	DRIVESHAFT

PILOT REPORTS GRINDING NOISE FROM TAIL ROTOR DRIVESHAFT. REMOVED DRIVESHAFT ASSY AND DISCOVERED ROUGH A041-11 DAMPER BEARING. REPLACED BEARING ASSY. CLOSER EXAMINATION SHOWED PAINT USED DURING DRIVESHAFT ASSEMBLY ON LIP OF SEAL. OVER TIME THIS DAMAGED THE LIP OF THE SEAL AND ALLOWED GREASE TO PURGE FROM BEARING. THIS IS THE SECOND OCCURRENCE OF THIS IN THE PAST 12 MONTHS. MFG NOTIFIED EACH TIME. SUGGEST BETTER QC DURING DRIVESHAFT BUILD UP AT MFG.

CA070515004	ROBSIN	LYC	RETAINER	BROKEN
5/2/2007	R22BETA	O320B2C	A4871	CYLINDER

(CAN) DURING 25 HOUR INSPECTION, FOUND (NR 2), (A) CYLINDERS IB LOWER BAFFLE RETAINER HEAD BROKEN AND ITS SPRING MISSING, THUS AFT BAFFLE IN CONTACT WITH NR 2 CYLINDER OIL RETURN LINE CAUSED DEEP WEAR ON OIL LINE. NO LEAK FOUND AT THAT TIME. RETAINER, SPRING AND OIL RETURN LINE REPLACED. (TC NR 20070515004)

2007FA0000418	ROBSIN		BLADE	DEBONDED

5/1/2006	R44RAVENII		C0165	MAIN ROTOR

IN FLIGHT BREAK UP. HELICOPTER CRASHED KILLED 2 HUMANS. NO REACTION TIME TO LAND SAFELY, PILOT WAS EJECTED OUT OF SEAT BY BLADE, KILLED INSTANTLY.

2007FA0000449	ROBSIN		BLADES	DEBONDED
5/1/2006	R44RAVENII		C0165	MAIN ROTOR

IN FLIGHT BREAK UP. HELICOPTER CRASHED KILLED 2 HUMANS. NO REACTION TIME TO LAND SAFELY, PILOT WAS EJECTED OUT OF SEAT BY BLADE KILLED INSTANTLY.

CA070503008	ROBSIN	LYC	VALVE STEM	BENT
4/29/2007	R44RAVENII	IO540AE1A5	LW13622	ENGINE

(CAN) AIRCRAFT WAS FLYING DURING A SEISMIC JOB. ENGINE LOST POWER AND ENGINE WAS RUNNING ROUGH. EMERGENCY LANDING TOOK PLACE. MAINTENANCE INVESTIGATED AND FOUND NR 1 CYLINDER DEFECTIVE. UPON FURTHER INVESTIGATION INTAKE VALVE STUCK OPEN AND CONTACTED PISTON. CYLINDER AND PISTON WERE REPLACED AND AIRCRAFT WAS PUT BACK IN SERVICE. (TC NR 20070503008)

CA070518002	ROBSIN	LYC	INTAKE VALVE	FRACTURED
5/16/2007	R44RAVENII	IO540AE1A5	LW13622	ENGINE

(CAN) PILOT LANDED TO CONDUCT TASK AT WELL SITE. DURING ATTEMPTED START UP, THE AIRCRAFT WOULD NOT START. AFTER A SHORT TIME, THE PILOT ATTEMPTED AGAIN AND THE AIRCRAFT STARTED. IT RAN VERY ROUGH AND EXCESSIVE VIBRATIONS. PILOT TOOK THE ENGINE POWER UP TO CHECK IF THE ISSUE WAS MAGNETO`S. HE THEN SHUT IT DOWN. MAINTENANCE CONDUCTED FURTHER INVESTIGATIONS AND FOUND CYLINDER NR 3 INTAKE VALVE HAD SNAPPED OR FRACTURED IN 3 PIECES. PORTION OF THE VALVE WAS FOUND IN THE INTAKE INDUCTION BOX. WILL NOTIFY WHEN FURTHER DETAILS ARE AVAILABLE. (TC NR 20070518002)

CA070502016	SAAB	GE	CLEVIS	BROKEN
4/26/2007	340B	CT79B	18942	RT BRAKE PEDAL

(CAN) ON RUN UP THE RT BRAKE PEDAL CLEVIS FORKEND AT THE BRAZE JOINT BROKE. ON TROUBLESHOOTING THIS SNAG, IT WAS FOUND THAT SB 340-32-078 HAD NOT BEEN COMPLETED ON THIS A/C, THE NEW SOLID FORKEND P/N 250704 WAS INSTALLED IAW SB. (TC NR 20070502016)

CA070327011	SAAB	GE	COUPLING	DAMAGED
3/27/2007	340B	CT79B	D2475	BLEED AIR SYS

(CAN) IN CRUISE A BLEED AIR LEAK INDICATION WAS OBSERVED FOR THE RT ENGINE. THE ENGINE WAS SHUTDOWN AS A PRECAUTIONARY MEASURE. AN UNEVENTFUL LANDING WAS MADE. MAINTENANCE INSPECTION FOUND NO EVIDENCE OF A BLEED AIR LEAK. FURTHER INVESTIGATION SHOWED THAT A FIRE WIRE COUPLING WAS LOOSE IN THE RT WING. WHEN THE COUPLING WAS REMOVED IT WAS FOUND THAT A CRUSH WASHER WAS MISSING FROM THE ASSEMBLY. THE COUPLING WAS CLEANED, INSPECTED AND REASSEMBLED CORRECTLY WITH (2) CRUSH WASHERS. AFTER INSTALLATION THE FIRE WIRE ELECTRICALLY TESTED SATISFACTORY. THE AIRCRAFT WAS SUBJECT TO FULL ENGINE RUNS AND NO BLEED AIR LEAK WAS EVIDENT. ALL COCKPIT INDICATIONS WERE NORMAL. (TC NR 20070327011)

CA070524006	SKRSKY	GE	ENGINE	FAILED
5/17/2007	S61N	CT581401	CT581402	NR 1

(CAN) REPORT NR 07-02204 (ON MAY 11, 2007) THE AC UNDERWENT AN ENGINE CHANGE ON NR 1 ENGINE AND REQUIRED A MAINTENANCE TEST FLIGHT. AFTER (2) GROUND RUNS INCLUDING LEAK CHECKS, DEPARTED TO THE TRAINING AREA TO PERFORM REQUIRED ENGINE TOPPING CHECK. VERIFIED WEATHER CONDITIONS AT 2000 FT, PA AND DESCENDED TO 1000 FT PA TO BEGIN CHECK. WITH NR 2 ENGINE SSL PULLED BACK TO 94 PERCENT NF AND NR 1 ENGINE AT FULL THROTTLE WE NOTED ENGINE VALUES CLIMBING THROUGH 2000 PA. LEVELED AIRCRAFT OFF TO CHECK EMERGENCY FUEL LEVER RIGGING AND THE CO-PILOT INCREASED EMERGENCY FUEL LEVER TO MAXIMUM AFTER DECREASING NR1 ENGINE SSL TO ABOVE GOVERNING RANGE. TOPPING VALUES WERE ON TARGET FOR NR 1 ENGINE AND THE CO-PILOT SLIGHTLY REDUCED EMERGENCY FUEL LEVER WHEN NR 1 ENGINE FLAMED OUT. ENTERED AUTOROTATION AND HAD THE CO-PILOT BRING BACK NR 2 ENGINE SSL TO NORMAL FLIGHT RANGE. WE THEN SECURED NR 1 ENGINE IAW THE EMERGENCY CHECK

LIST AND PERFORMED SINGLE ENGINE LANDING AT HELIPORT. DECIDED AGAINST AN ENGINE RE-START IN FLIGHT DUE TO CLOSE PROXIMITY TO HELIPORT AND UNKNOWN REASON FOR FLAME OUT. NO LIMITS ON EITHER ENGINE OR DRIVETRAIN WERE EXCEEDED. (ULI BERGMANN-AH177359)11 MAY 2007. CONTINUATION REPORT ON ATTACHMENT. (TC NR 20070524006)

AMCR200700002	SKRSKY	FIRE DETECTOR	FAULTY
6/12/2007	S76B	61423473205	NR 1 ENGINE

UPON STARTER ENGAGEMENT FOR FIRST ENGINE START (EITHER ENGINE), THE NR 1 ENGINE FIRE ANNUNCIATOR WOULD ILLUMINATE ALONG WITH A FIRE TONE, BUT NO T-HANDLE ILLUMINATION. ILLUMINATION AND TONE WOULD CEASE AROUND 35-45% RPM. ALL FIRE DETECTION TESTS WOULD CHECK OK. REPLACEMENT OF NR 1 BOTTOM FLAME DETECTOR FIXED PROBLEM.

CA070531007	SNIAS	TMECA	VALVE	MALFUNCTIONED
4/25/2007	AS350B1	ARRIEL1D	3186100	ENGINE

(CAN) ASSEMBLY ON CONDITION. THIS UNIT WAS REMOVED SERVICEABLE FOR ANOTHER AIRCRAFT. A FUNCTIONAL CHECK WAS CARRIED OUT. FOLLOWING A RUN UP TO 100 PERCENT THE ENGINE RPM WAS REDUCED AND STABILIZED AT JUST OVER FLIGHT IDLE FOR 30 SECONDS IAW COOL DOWN REQUIREMENTS. DEPRESSION OF THE STARTER BUTTON AT THIS POINT SHOULD NOT HAVE CAUSED ANY PROBLEM BUT IN THIS FUNCTIONAL CHECK A FLAME OUT OCCURED. A BENCH WAS CARRIED OUT WITH CONSISTENT FAILURES OCCURRED AT PRESCRIBED P2 PRESSURE. (TC NR 20070531007)

CA070531005	SNIAS	TMECA	VALVE	MALFUNCTIONED
4/25/2007	AS350B2	ARRIEL1D1	3186100	ENGINE

(CAN) ASSEMBLY IS ON CONDITION. AFTER CARRYING OUT A 100 HR AND 300 HR INSPECTION A FUNCTIONAL CHECK WITH THE INJECTOR ELECTRO VALVE (IEV) WAS ACCOMPLISHED. FOLLOWING A RUN-UP TO 100 PERCENT, THE ENGINE RPM WAS REDUCED AND STABILIZED AT JUST OVER FLIGHT IDLE FOR 30 SECONDS IAW COOL DOWN REQUIREMENTS. DEPRESSION OF THE STARTER BUTTON AT THIS POINT SHOULD NOT HAVE CAUSED ANY PROBLEM BUT IN THIS FUNCTIONAL CHECK A FLAME OUT OCCURRED. FOLLOWING THE FLAME OUT A BENCH TEST WAS CARRIED OUT AND IT WAS DETERMINED THAT IT`S OPERATION AT A PRE DETERMINED P2 PRESSURE WAS INTERMITTENT. SENT UNIT TO MFG FOR REPAIR OR OVERHAUL AND THE UNIT WAS SCRAPPED. (TC NR 20070531005)

CA070514027	SNIAS	TMECA	TMECA	BLEED VALVE	BROKEN
4/16/2007	AS350B2	ARRIEL1D1	ARRIEL1D1	0301037140	ENGINE

(CAN) PIPE FAILED/BROKEN AROUND COMPLETE CIRCUMFERENCE OF FLARE. FOUND WHEN BLEED VALVE WOULD NOT PASS TEST FOR CORRECT OPERATION. (TC NR 20070514027)

CA070514029	SNIAS	TMECA	SKIN	CRACKED
4/22/2007	AS350B2	ARRIEL1D1		FUSELAGE

(CAN) FOUND CRACK IN SKIN OF MAIN TRANSMISSION DECK DURING SCHEDULED 500 HOUR INSPECTION. DECK REPAIRED IAW MFG REPAIR INSTRUCTIONS FOR CRACKS DISCOVERED IN THIS AREA. (TC NR 20070514029)

CA070510006	SNIAS	TMECA	GEAR	WORN
5/10/2007	AS350B2	ARRIEL1D1	350A33100021	T/R GEARBOX

(CAN) GEAR SET, PINION GEAR AND BEVEL GEAR WEAR AND PRODUCED METAL. GEAR SET SCRAPPED DUE TO SPALLING. GEAR SET INSTALLED AT LAST OVERHAUL OF THE GEARBOX. TGB TSN 4632.8 / TSO 691.2 GEAR SET TSN 691.2 (TC NR 20070510006)

2007FA0000447	SNIAS	TMECA	HOSE	BURST
5/8/2007	AS350B3	ARRIEL2B	5700700A	A/C SYSTEM

HIGH PRESSURE AIR CONDITIONER HOSE BURST.

CA070321010	SNIAS	LYC	FCU	FAILED
3/16/2007	AS350D	LTS101600A2	430109817	ENGINE

(CAN) THE ENGINE FLAMED OUT WHILE THE THROTTLE WAS BEING RETARDED DURING A PRACTICE AUTOROTATION. THE POSITION OF THE THROTTLE AT THE TIME OF THE FLAME OUT WAS NO WHERE NEAR THE POSITION IT NORMALLY CUTS OFF THE FUEL DURING NORMAL SHUTDOWN. AFTER CONDUCTING A NORMAL AUTOROTATION, THE PILOTS RESTARTED THE ENGINE AND PERFORMED A TEST HOVER AND FLIGHT. THEY PERFORMED (3) MORE PRACTICE AUTOROTATIONS WITHOUT ANY MORE INCIDENT OR SYMPTOMS. NO FUEL LEAKS OR VISIBLE MECHANICAL ISSUES WERE FOUND. THE FCU WAS REPLACED AS A PRECAUTION AND IS BEING SENT TO AN APPROVED FACILITY FOR BENCH TESTING. (TC NR 20070321010)

CA070503010	SWRNGN	GARRTT	CONTROL CABLE	FAILED
4/23/2007	SA226TC	TPE33110UA	C8102413	POWER LEVER

(CAN) CONTROL CABLE FAILED WHERE IT MAKES A BEND COMING OUT OF THE CENTER PEDESTAL. COMMON FAILURE POINT. REPLACED WITH NEW PART, REPLACED OTHER SIDE AS A PRECAUTION AS WELL. (TC NR 20070503010)

CA070417001	SWRNGN	GARRTT	PARAMOUNT	VALVE	STUCK
4/12/2007	SA226TC	TPE33110UA		A032	MASTER CYLINDER

(CAN) THE AC RT MLG TIRES WERE BLOWN UPON LANDING. DURING INSPECTION IT WAS FOUND THAT THE RT BRAKE ASSY WERE DRAGGING AND OVERHEATED CAUSING THE WHEELS NOT TO TURN FREELY UPON TOUCHDOWN. TIRES, BRAKES AND AFFECTED BRAKE MASTER CYLINDERS WERE REPLACED. AN INITIAL TEARDOWN OF THE MASTER CYLINDERS INDICATED THAT THE CAPTAIN`S RT CYLINDER WAS AT FAULT DUE TO MALFUNCTIONS OF INTERNAL COMPONENTS. AD 2002-08-01 DEALS WITH A SPECIFIC FAILURE MODE OF THESE MASTER CYLINDERS AND HAVE A OVERHAUL LIMIT OF 15000 HRS TIS. THESE MASTER CYLINDERS HAD 5282.00 HRS TT SINCE OVERHAUL. FURTHER INVESTIGATION REVEALED THAT THE COTTER PIN (AN380-2C2) WHICH HOLDS THE VALVE IN THE MASTER CYLINDER TO THE ACTUATING ARM WAS BENT NOT ALLOWING FULL ACTUATION OF THE VALVE TO THE OPEN POSITION THEREFORE NOT ALLOWING BRAKE PRESSURE TO BE RELEASED UPON RELEASE OF THE BRAKE PEDAL. FURTHER AGGRAVATING THIS SITUATION IT IS POSSIBLE THE DRAGGING BRAKE OVERHEATING CAUSING THE HYDRAULIC BRAKE FLUID TO HEAT AND EXPAND BUILDING MORE PRESSURE AND THIS BACK PRESSURE CAUSED THE BRAKE MASTER CYLINDER VALVE COTTER PIN TO BEND, PREVENTING THE RT MLG WHEELS TO TURN ON TOUCHDOWN. TECHNICIANS EXPERIENCED IN OVERHAULING THESE MASTER CYLINDERS INDICATED THAT MOST LIKELY THE BENT COTTER PIN AND STUCK VALVE WAS SUBSEQUENT DAMAGE CAUSED TO THE CYLINDER DUE TO THE EXCESSIVE BACK PRESSURES EXPERIENCED DUE TO THE DRAGGING BRAKE. IT IS NOT DEFINITIVE THAT THE MALFUNCTIONING MASTER CYLINDER WAS THE CAUSE OF THE DRAGGING BRAKE. DUE TO THIS OPERATOR REPLACED BOTH RT SIDE BRAKE MASTER CYLINDERS. THIS PROBLEM HAS NOT REOCCURRED. THIS OPERATOR WILL BE IMPLEMENTING A POLICY TO REPLACE ALL AFFECTED BRAKE MASTER CYLINDERS WHENEVER A DRAGGING OR OVERHEATED BRAKE IS EVIDENT OR SUSPECTED, TO ELIMINATE THE PROBLEM OF POSSIBLE INTERNAL DAMAGE TO THE MASTER CYLINDERS DUE TO THE OVERHEATED BRAKE. (TC NR 20070417001)

2007FA0000402	SYMPHO	CONTROL CABLE	CHAFED
5/22/2007	SA160		TE FLAPS

DURING PREFLIGHT INSPECTION, FOUND FLAP CONTROL CABLES CHAFING ON THE FLAP TRACK. DEPTH OF INTERFERENCE BETWEEN CABLE AND TRACK WAS ABOUT THE DIAMETER OF THE CABLE.

2007FA0000403	SYMPHO	CONTROL CABLE	CHAFED
5/22/2007	SA160		TE FLAPS

DURING PREFLIGHT INSPECTION, FOUND FLAP CONTROL CABLES CHAFING ON THE FLAP TRACK. DEPTH OF INTERFERENCE BETWEEN CABLE AND TRACK WAS ABOUT THE DIAMETER OF THE CABLE.

CA070514012	SZD	PWA	DIAPHRAGM	PUNCTURED
3/5/2007	SZD48	PT6A65B		BLEED VALVE

(CAN) THE ENGINE EXPERIENCED AN UNCOMMANDED POWER REDUCTION IN CLIMB. SUBSEQUENT INSPECTION REVEALED PUNCTURED COMPRESSOR BLEED VALVE DIAPHRAGM. (TC NR 20070514012)

END OF REPORTS