U.S. Department of Transportation
Federal Aviation Administration

AFS-600
Regulatory Support Division

ADVISORY CIRCULAR

43-16A

AVIATION MAINTENANCE ALERTS

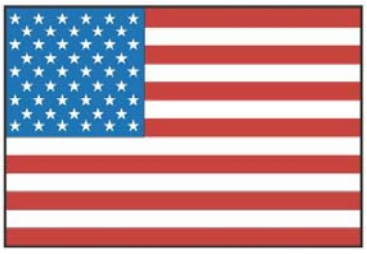

ALERT NUMBER 358

MAY 2008

CONTENTS

AIRPLANES

CESSNA 1
GULFSTREAM 4
PIPER 4

HELICOPTERS

SIKORSKY 5

POWERPLANTS

CONTINENTAL 5
LYCOMING 6
UNISON MAGNETO 6

PROPELLERS

SENSENICH 9

AIR NOTES

INTERNET SERVICE DIFFICULTY REPORTING (iSDR) WEB SITE 13
IF YOU WANT TO CONTACT US 14
AVIATION SERVICE DIFFICULTY REPORTS 14

U.S. DEPARTMENT OF TRANSPORTATION
FEDERAL AVIATION ADMINISTRATION
WASHINGTON, DC 20590

AVIATION MAINTENANCE ALERTS

The Aviation Maintenance Alerts provide a common communication channel through which the aviation community can economically interchange service experience, cooperating in the improvement of aeronautical product durability, reliability, and safety. This publication is prepared from information submitted by those who operate and maintain civil aeronautical products. The contents include items that have been reported as significant, but have not been evaluated fully by the time the material went to press. As additional facts such as cause and corrective action are identified, the data will be published in subsequent issues of the Alerts. This procedure gives Alerts' readers prompt notice of conditions reported via a Malfunction or Defect Report (M or D) or a Service Difficulty Report (SDR). Your comments and suggestions for improvement are always welcome. Send to: FAA; ATTN: Aviation Data Systems Branch (AFS-620); P.O. Box 25082; Oklahoma City, OK 73125-5029.

(Editor's notes are provided for editorial clarification and enhancement within an article. They will always be recognized as italicized words bordered by parentheses.)

AIRPLANES

CESSNA

Cessna: 172RG; Cracked Main Gear Actuator; ATA 3233

A licensed aircraft mechanic states, "On a dual training flight a student and instructor heard a noise when the *(aircraft's)* landing gear was retracted. The left landing gear remained in a partially retracted position, unable to actuate up or down. A successful gear up landing was made.

"The L/H landing gear actuator body *(P/N 128101-3)* had failed (cracked) at the forward mounting bolt hole, allowing the actuator bore to open—enough that the piston would not engage the pivot sector gear sufficiently to move the landing gear."

(A search of the FAA Service Difficulty Reporting System data base revealed 39 similar entries – 45 by truncating the last digit. There is an identical entry in the April 2007 Alerts.)

Aircraft Total Time: 9,029.3 hours.

3/4

Cessna illustrated parts catalog MODEL 172RG

Hydraulic System (Cont)

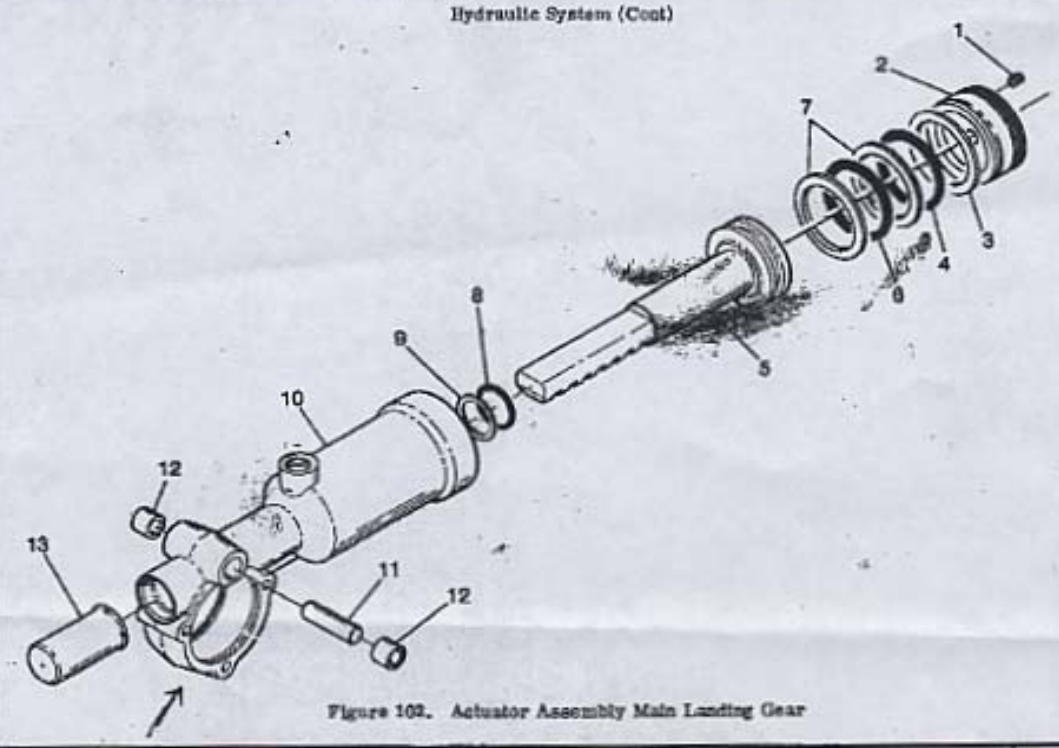

Figure 102. Actuator Assembly Main Landing Gear

FIGURE AND INDEX NO.	PART NUMBER	DESCRIPTION 1 2 3 4 5 6 7	UNITS PER ASSY	USABLE ON CODE
102 -	9882015-2	ACTUATOR ASSEMBLY-MAIN LANDING GEAR	2	
- 1	AN565D1032H5	SET SCREW	1	
- 2	9882016-1	GLAND-END	1	
- 3	S1628-135	RING	1	
- 4	MS28775-135	PACKING	1	
- 5	9882004-1	PISTON-MAIN GEAR ACTUATOR	1	
- 6	MS28775-225	PACKING	1	
- 7	S1628-225	RING	2	
- 8	MS28775-214	PACKING	1	
- 9	S1628-214	RING	1	
-10	1281001-3	BODY-MAIN GEAR ACTUATOR	1	
-11	1281019-1	ROLLER-PISTON	1	
-12	S1997C7-8	BEARING	2	
-13	1281021-3	CAP	1	

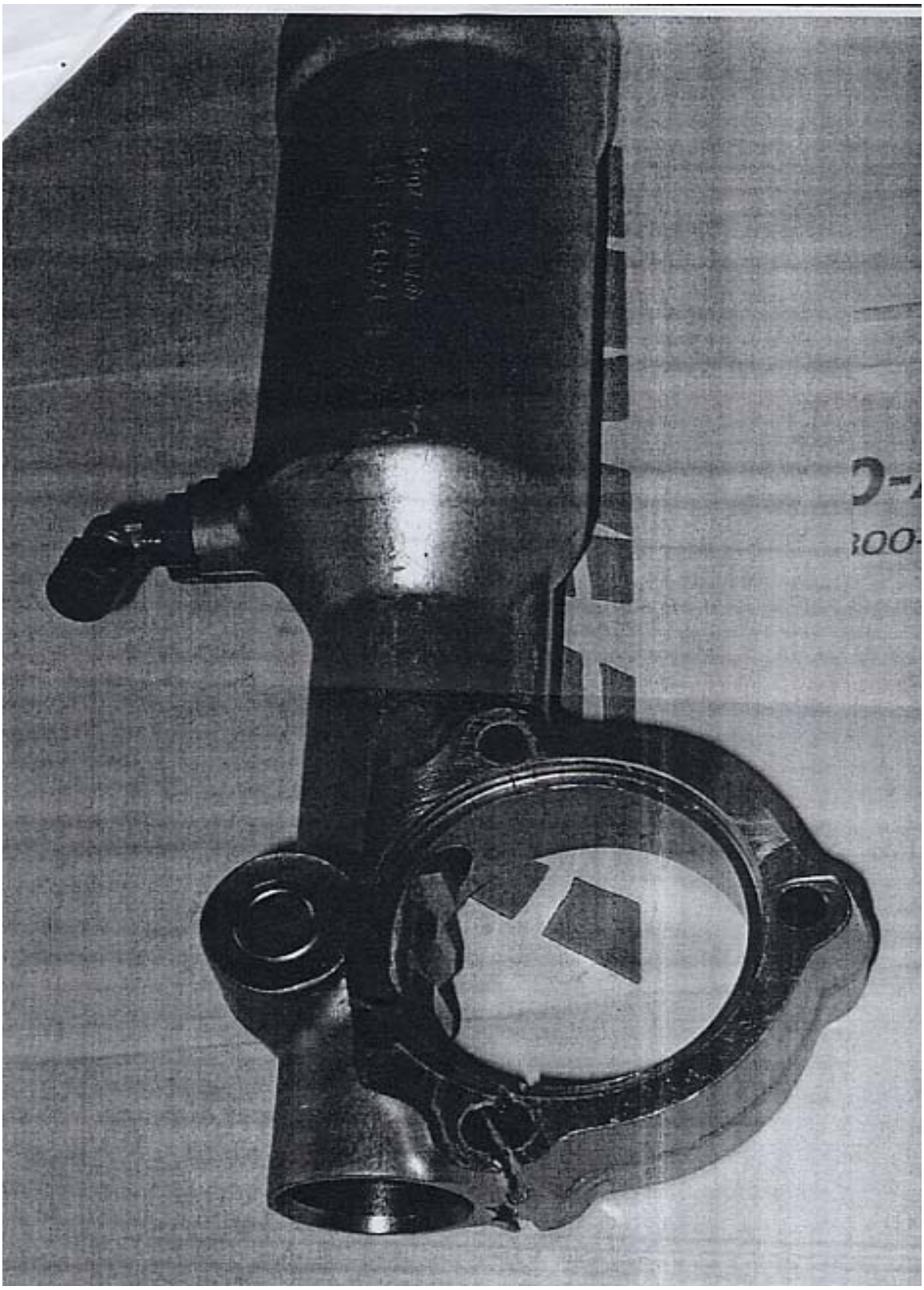

Part Total Time: (unknown).

GULFSTREAM

Gulfstream: GV-SP; Ruptured Wing Leading Edge; ATA 5350

(The following defect report was submitted by an FAA inspector and is reprinted here, in part.)

"One hour and forty-five minutes into the flight, the crew *(of this aircraft)* noted an audible 'thump'—followed by a 'change in wind noise'. As the aircraft is equipped with proximity cameras, the flight crew was able to see a 'hole of significant size' in the area of the single point refueling access door by using the lower aft-facing fuselage camera. The flight crew notified *(air traffic control)* and requested an emergency landing...the aircraft landed without further incident.

"*(Upon inspection...)* a large hole was noted in the right wing-to-fuselage forward fairing just forward and inboard of the single-point refueling access door. The hole was located approximate to fuselage station 391.00—417.00. External examination *(revealed)* a ragged-edged, tear-drop shaped hole approximately 1.5 feet across and 2.5 to 3 feet long in the fairing. A flap of composite material was found inside the hole—its aft end still attached to the fairing. *(The down-stream tire was also...)* closely examined for deep cuts and/or missing material. No defects were noted on the tire or wheel.

"Internal examination of the fairing revealed two part number stamps and a hand-written part identification. The apparent top level assembly part number is Gulfstream P/N 1159B54101-4. The 'flap' was positioned back into place, indicating no missing inner material or punctures. The fairing is constructed with a paper honeycomb core between what appears to be a single layer of woven material on each side of the honeycomb. Upon close examination of the inner surface of the fairing, the woven material appears to have failed along both the warp and fill of the inner surface fabric. Furthermore, an apparent lack of bonding between the honeycomb and woven material was evident, with little or no pattern of honeycomb in the adhesive in (or on) the inner surface material(s). No evidence of post production repairs was apparent."

(The submitting inspector sent copies of this report to the Atlanta Manufacturing District Office for possible part nonconformance considerations.)

Part Total Time: 1,300 hours.

PIPER

Piper: PA-44-180; Defective Fuel Selector Valves (2ea.); ATA 2823

(The following description combines two identical defect reports for the same part on the same aircraft, differing only in serial number and time in service.)

An unknown submitter writes, "The *(first)* fuel selector valve *(P/N 1908-00-1)* was replaced under warranty in this aircraft. It was found to operate normally after installation. Upon accumulation of 6.8 hours time-in-service, this valve was found to 'stick' at each detent: *cross feed, off,* and *normal* positions. This 'sticking' was so severe that even the force of two hands on the selector valve would not move the valve out of the detent position. The cause of this problem is unknown, however, it does pose a safety of flight issue *(since this valve, at times...)* would not move out of the detent position. If this valve were to stick during an emergency *(or during single engine training...)* it could pose an *(even greater)* threat to the safety of flight.

"The fuel selector cable was inspected for defects, however, internally the valve was found to be defective. This valve was removed from service and replaced *(with a second, new valve)* under warranty claim...."

(This second valve survives a mere 10.2 hours of operational time before it too becomes "sticky" and generates the second defect report. A search of the FAA Service Difficulty Reporting System data base reveals this P/N only

appears twice, but the specific ATA 2823 "fuel selector valves" returns 229 reports, and ATA 2824 "transfer valves" returns 114 reports.)

Part Total Times: 6.8 and 10.2 hours (respectively).

HELICOPTERS

SIKORSKY

Sikorsky: CH-54A; Failed Servo Mount (gearbox); ATA 6320

An unknown submitter describes a part failure which *(may have)* led to this helicopter's accident, stating, "*(This aircraft...)* experienced a hard ground rollover of a CH-54A Skycrane. Initial inspection of the wreckage revealed a servo pin from the left lateral servo was missing from the transmission lug, causing the servo to remove itself from the transmission mount. The locking pin holder, pin, bolt, and nut were all found intact and lock-wired together. The nut had been pulled from the stud on the transmission mount. This has not been determined to be the cause of the accident, however, *(our company)* feels it is important to share this information with other operators of Skycranes in the interest of safety.

"The probable cause is *(attributed)* to the nut (P/N NAS509-4). A recommendation is to replace this nut at the required 200 hour inspection of the servo pin."

(Noted part numbers include: Servo Pin 6465-20201-101, Left Lateral Servo S1565-20421-042, Locking Pin Holder 6465-20202, Pin 6465-20201-101, Bolt AN6H5, Nut NAS509-4, and the Main Rotor Gearbox 6435-20400-058.)

Part Total Time *(since overhaul):* 315.3 hours.

POWERPLANTS

CONTINENTAL

Continental: IO-520-BA; Cracked ECI Cylinders; ATA 8530

(The following description combines three identical defect reports of cracked cylinders from the same engine. The host aircraft is a Beech 36.)

An A&P mechanic writes, "*(These)* ECI Revision 3 'E' series cylinders *(are)* cracked behind the fuel injector—between the first and third fin. A compression check with soapy water revealed these cracks *(which)* cannot be seen with the naked eye."

(Cylinder part numbers: TISN71.2ACA; three each. See the next reports for more of the same.)

Part Total Times: 611.9 (report 1) and 581.7 (reports 2 & 3) hours.

Continental: IO-520-CB; Cracked ECI Cylinders; ATA 8530

(Twelve days pass for the mechanic/author of the previous submission before he again encounters the same defect. This engine is connected to a Beech D55.)

"This *(engine's)* number six cylinder," writes the mechanic, "was of the new, ECI Revision 3 'E' series. *(It was found to be...)* cracked between fins 1-3 behind the fuel injector. This is the sixth ECI Revision 3 'E' series cylinder *(I have found)* with cracks *(occurring)* in the same location."

(Cylinder P/N is TISN71.2ACA. A search of the FAA Service Difficulty Reporting System data base returns 37 reports for this P/N. Read on for another defective cylinder.)

Part Total Time: 744.5 hours.

LYCOMING

Lycoming: O-320-D2J; Cracked ECI Cylinder; ATA 8530

(Across the country another mechanic submits his cracked cylinder report, providing more operational detail. This time the aircraft is a Cessna 172P.)

"During cruise flight, the pilot reported a loud 'bang' followed by excessive vibration. He increased power to maintain altitude and made a well-executed, precautionary landing...." "After shut-down there was a large oil puddle *(seen)* developing under the aircraft.

"The airplane's cowl was removed and the number 4 cylinder was found to have its top half separated from the bottom. This is an ECI cylinder *(P/N AEL65102)* reported to be in service less than a year. This cylinder has the ECI (Oberdorfer) casting (AEL85099) which is not subject to AD2006-12-07 or ECI SB 05-8. This engine has three other ECI cylinders with the same casting number. It is estimated this engine lost 2.5 quarts of oil during the few minutes between the *(cylinder)* separation *(event)* and engine shut-down.

"*(It is suggested...)* the FAA look at whether or not the AD should be expanded to include this casting number."

(A search of the FAA Service Difficulty Reporting System data base revealed this cylinder P/N has 34 entries since 2000, and the cylinder ATA 8530 has 2,309 entries since 1993.)

Part Total Time: (unknown; less than 1 year)

UNISON MAGNETO

Unison Magneto: 6314; Internal Arcing Damage; ATA 7414

(This magneto provides fire for a TCM IO-360ES pulling a Cirrus SR20. The attending mechanic makes the following submission.)

"During *(this aircraft's)* first annual inspection *(a required)* 500 hour magneto inspection was complied with early due to the number of hours previously flown. Both magnetos showed the same internal arcing—so severe the brush holder (P/N K3823) was melted and/or burned up. We contacted Unison/Slick technical support—*(apparently)* our magnetos were matched *(to a production series about which Slick is aware).* The carbon *(composite)* used in the manufacture of these brushes was too soft, *(resulting in excessive)* dust which caused the arcing. It is a wonder this customer's engine continued to run. I believe he was on the verge of finding out what a parachute is all about!"

(A search of the FAA Service Difficulty Reporting System data base revealed the K3823 P/N is specified at least 19 times. Thanks for the new photos, Otis—Ed.)

LH

Part Total Time: 444.9 hours.

Unison Magneto: 4370; Broken Rotor Shaft; ATA 7414

"A pilot departed on a VFR day flight," says the submitting mechanic. "During the climb from departure, the pilot noticed a slight engine roughness that lasted only a second. The engine smoothed out until the aircraft was leveled out at cruise altitude—approximately 2500 feet AGL *(above ground level)*. Shortly after reaching cruise altitude and cruise power settings the engine began to run rough. The pilot performed a magneto check in flight, finding the right magneto inoperative. The pilot switched to 'left magneto' and returned to land at the departure airport without incident.

"Upon opening the magneto, the rotor gear (P/N M3827) and a portion of the rotor shaft were found laying inside the magneto housing. The rotor gear was pressed on the shaft as per manufacturer's drawing—*(this part)* and the gear in the distributor block assembly (P/N K3822) were not damaged and were free of obstructions. They moved without binding. The shaft broke just below the slot in the shaft that holds the cam which, *(in turn)* opens the contacts. There did not appear to be any other mechanical defect with the magneto."

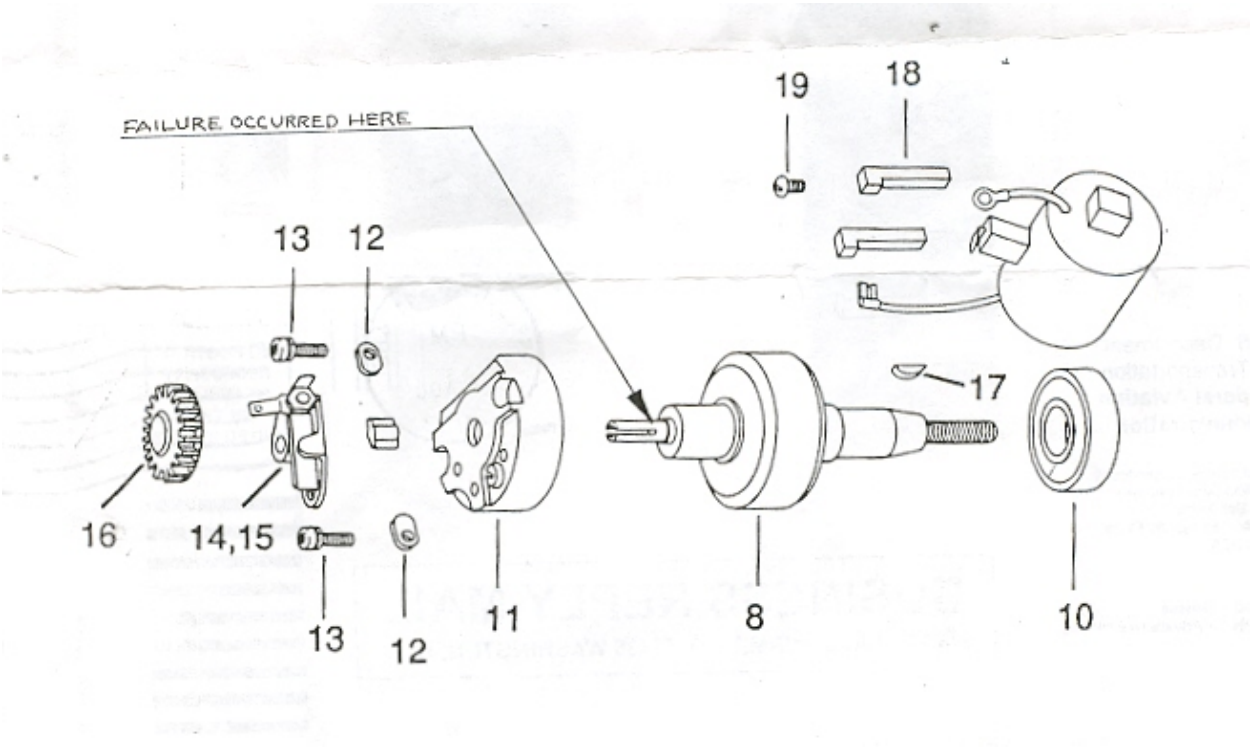

(A search of the FAA Service Difficulty Reporting System data base revealed the M3827 P/N generates 27 references.)

Part Total Time: 367.9 hours.

PROPELLERS

SENSENICH

Sensenich: W80CM845; Loose Propeller; ATA 6110

(The following account references a Piper PA18-150 refitted with a wooden propeller. The submitter holds an A&P with inspection authorization.)

"The pilot reported slight vibration during a flight of approximately one hour. When power was reduced for landing the vibration became more evident. Our initial inspection found one prop bolt *(missing; bolt #1)* had come out forward and through the spinner, and the propeller *(itself)* was loose. After removal of the spinner we found *(...bolt 2 had also backed out about approximately 1/8 inch)*. Bolts *(3 and 4)* remained safety-wired but not tight. On the remaining pair of bolts *(5 and 6)* the safety wire was broken...and these bolts were backed out approximately one inch. Complete removal of the prop required cutting the head off one bolt. *(Its)* attachment bushing *(was found)* broken off flush with the crankshaft flange. A second attachment bushing was also found broken off...."

"The original metal propeller (model 76EM8-0-56) was removed from the aircraft on July 20, 2006 and this wood propeller installed (STC SA 192NW and Sensenich 'Wood Propellers Installation and Maintenance') and torqued in accordance with *(Sensenich)* Table 1. Propeller maintenance bolt torque *(had also been...)* complied with since installation. Please refer to the attached log book entries."

(This submission provided no speculation as to cause. To summarize the log entries: the wood prop was installed and run for 1 hour, then the bolts re-torqued. Six months and 15 flight hours pass and apparently all is well. The aircraft receives an annual inspection—with prop torque. Another 6 months pass with another 15 hours flight time, but now the bolts are falling out—and there is no mention of thread failure in this report. An obvious question: what would this same equipment look like if the bolts had been run down to the flange in preparation for a final but forgotten torque, then saftied and flown for 15 hours? One would have to look hard at the last inspection. "Thank-you" to the submitter for the scary photographs—Ed.)

PIN TC5152-

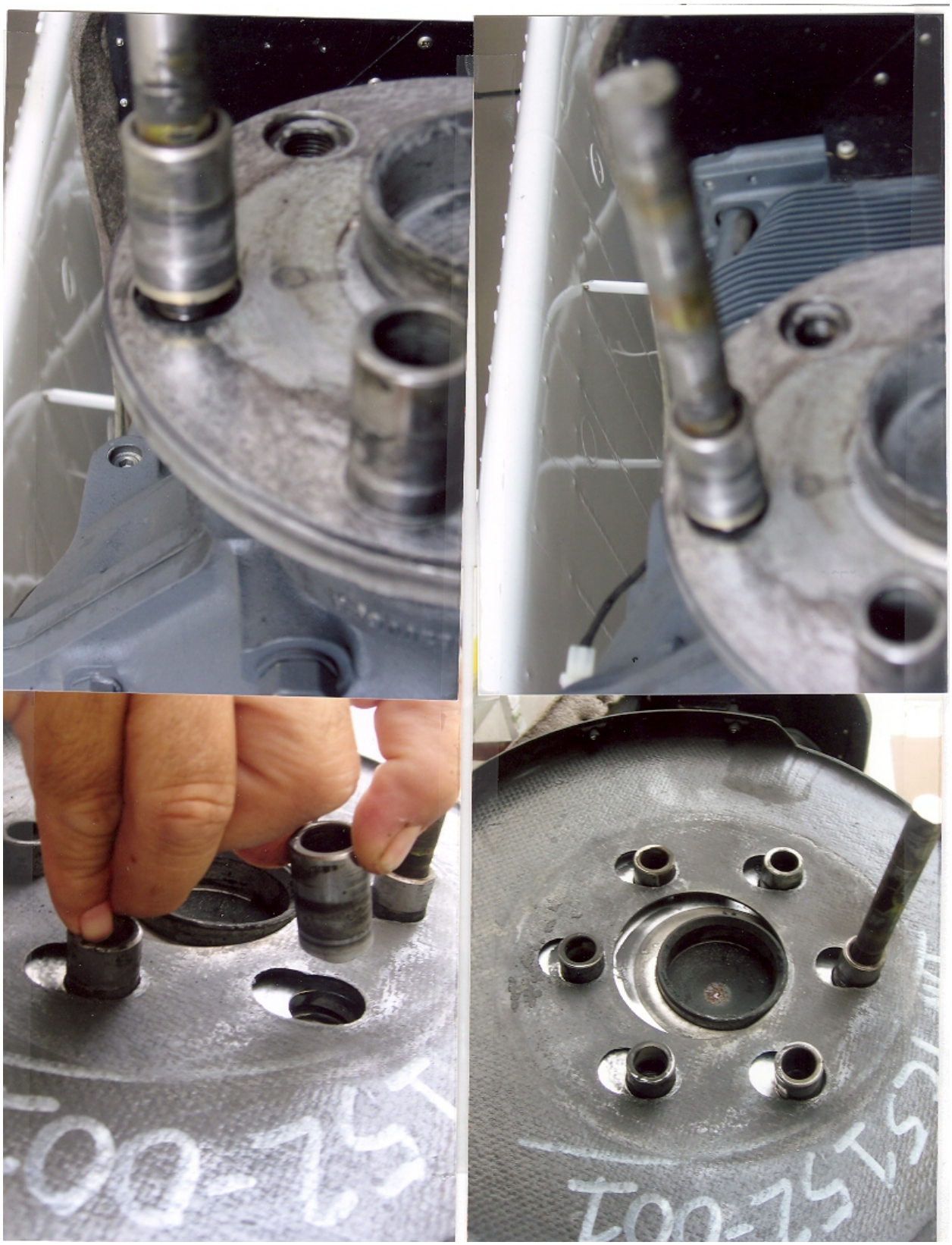

Part Total Time: 31 hours.

AIR NOTES

INTERNET SERVICE DIFFICULTY REPORTING (iSDR) WEB SITE

The Federal Aviation Administration (FAA) Internet Service Difficulty Reporting (iSDR) web site is the front-end for the Service Difficulty Reporting System (SDRS) data base that is maintained by the Aviation Data Systems Branch, AFS-620, in Oklahoma City, Oklahoma. The iSDR web site supports the Flight Standards Service (AFS), Service Difficulty Program by providing the aviation community with a voluntary and electronic means to conveniently submit in-service reports of failures, malfunctions, or defects on aeronautical products. The objective of the Service Difficulty Program is to achieve prompt correction of conditions adversely affecting continued airworthiness of aeronautical products. To accomplish this, Malfunction or Defect Reports (M or Ds) or Service Difficulty Reports (SDRs) as they are commonly called, are collected, converted into a common SDR format, stored, and made available to the appropriate segments of the FAA, the aviation community, and the general public for review and analysis. SDR data is accessible through the "Query SDR data" feature on the iSDR web site at: http://av-info.faa.gov/sdrx/.

In the past, the last two pages of the Alerts contained a paper copy of FAA Form 8010-4, Malfunction or Defect Report. To meet the requirements of *Section 508, this form will no longer be published in the Alerts; however, the form is available on the Internet at: http://forms.faa.gov/forms/faa8010-4.pdf. You can still download and complete the form as you have in the past.

*Section 508 was enacted to eliminate barriers in information technology, to make available new opportunities for people with disabilities, and to encourage development of technologies that will help achieve these goals.

A report should be filed whenever a system, component, or part of an aircraft, powerplant, propeller, or appliance fails to function in a normal or usual manner. In addition, if a system, component, or part of an aircraft, powerplant, propeller, or appliance has a flaw or imperfection, which impairs or may impair its future function, it is considered defective and should be reported under the Service Difficulty Program.

The collection, collation, analysis of data, and the rapid dissemination of mechanical discrepancies, alerts, and trend information to the appropriate segments of the FAA and the aviation community provides an effective and economical method of ensuring future aviation safety.

The FAA analyzes SDR data for safety implications and reviews the data to identify possible trends that may not be apparent regionally or to individual operators. As a result, the FAA may disseminate safety information to a particular section of the aviation community. The FAA also may adopt new regulations or issue airworthiness directives (ADs) to address a specific problem.

The iSDR web site provides an electronic means for the general aviation community to voluntarily submit reports, and may serve as an alternative means for operators and air agencies to comply with the reporting requirements of 14 Title of the Code of Federal Regulations (CFR) Section 121.703, 125.409, 135.415, and 145.221, if accepted by their certificate-holding district office. FAA Aviation Safety Inspectors may also report service difficulty information when they conduct routine aircraft maintenance surveillance as well as accident and incident investigations.

The SDRS data base contains records dating back to 1974. At the current time, we are receiving approximately 40,000 records per year. Reports may be submitted to the iSDR web site on active data entry form or submitted hardcopy to the address below.

The SDRS and iSDR web site point of contact is:

Pennie Thompson
Service Difficulty Reporting System, Program Manager
Aviation Data Systems Branch, AFS-620
P.O. Box 25082
Oklahoma City, OK 73125
Telephone: (405) 954-1150
SDRS Program Manager e-mail address: 9-AMC-SDR-ProgMgr@faa.gov

IF YOU WANT TO CONTACT US

We welcome your comments, suggestions, and questions. You may use any of the following means of communication to submit reports concerning aviation-related occurrences.

Editor: Daniel Roller (405) 954-3646
FAX: (405) 954-4570 or (405) 954-4655

E-mail address: Daniel.Roller@faa.gov

Mailing address: FAA, **ATTN: AFS-620 ALERTS**, P.O. Box 25082, Oklahoma City, OK 73125-5029

You can access current and back issues of this publication from the internet at: http://av-info.faa.gov/. Select the General Aviation Airworthiness Alerts heading.

AVIATION SERVICE DIFFICULTY REPORTS

The following are abbreviated reports processed for the previous month, which have been entered into the FAA Service Difficulty Reporting (SDR) System data base. This is not an all-inclusive listing of Service Difficulty Reports. For more information, contact the FAA, Regulatory Support Division, Aviation Data Systems Branch, AFS-620, located in Oklahoma City, Oklahoma. The mailing address is:

FAA
Aviation Data Systems Branch, AFS-620
PO Box 25082
Oklahoma City, OK 73125

To retrieve the complete report, click on the Control Number located in each report. These reports contain raw data that has not been edited. Also, because these reports contain raw data, the pages containing the raw data are not numbered.

If you require further detail please contact AFS-620 at the address above.

Federal Aviation Administration

Service Difficulty Report Data

Sorted by aircraft make and model then engine make and model. This report derives from unverified information submitted by the aviation community without FAA review for accuracy.

Control Number	Aircraft Make	Engine Make	Component Make	Part Name	Part Condition
Difficulty Date	**Aircraft Model**	**Engine Model**	**Component Model**	**Part Number**	**Part Location**
2008FA0000152				PUMP	FAILED
3/4/2008				38809981	APU OIL

2 APUS WERE REPORTED LOP AUTO SHUTDOWN. HAVE RECEIVED APU P-195 AND P-141 FROM FOR THE SAME REASON OF REMOVAL. DISASSEMBLY OF THE ENGINES REVEALED LP ROLLER BEARING FAILURE. ONE OF THE ENGINE'S BEARING DID NOT HAVE LUBRICATION AT ALL. THE OIL PUMPS P/N 3880998-1 WERE ROUTED TO BENCH TEST AND LOW PERFORMANCE WAS NOTED. DISASSEMBLY OF THE OIL PUMP REVEALED PORT PLATE P/N 3603681-1 HAD SIGNIFICANTLY WORN. IT ALLOWED THE PORT PLATE MOVE TO RESTRICT THE OIL INLET PORT AND OUTLET PORT AND CAUSED LOW PUMP PERFORMANCE. THE BEARING FAILURE WAS A CONSEQUENCE OF INSUFFICIENT OIL PRESSURE.

FAA030408001				PUMP	FAILED
3/4/2008					APU ENGINE

2 APUS WERE REPORTED LOP AUTO SHUTDOWN. DISASSEMBLY OF THE ENGINES REVEALED LP ROLLER BEARING FAILURE. ONE OF THE ENGINE'S BEARING DID NOT HAVE LUBRICATION AT ALL. THE OIL PUMPS P/N 3880998-1 WERE ROUTED TO BENCH TEST AND LOW PERFORMANCE WAS NOTED. DISASSEMBLY OF THE OIL PUMP REVEALED PORT PLATE P/N 3603681-1 HAD SIGNIFICANTLY WORN. IT ALLOWED THE PORT PLATE MOVE TO RESTRICT THE OIL INLET PORT AND OUTLET PORT AND CAUSED LOW PUMP PERFORMANCE. THE BEARING FAILURE WAS A CONSEQUENCE OF INSUFFICIENT OIL PRESSURE.

2008FA0000261		CONT		BUSHING	BROKEN
3/17/2008		TSIO520WB		639193	COUNTER WEIGHT

RECEIVED ENGINE IN AFTER 32.2 HOURS SINCE MAJOR OVERHAUL. ENGINE WAS DAMAGED BY COUNTERWEIGHT FAILURE ON CRANKSHAFT. DAMAGED TO THE CRANKCASE, CYLINDERS AND ROD WAS FROM WHAT APPEARED TO BE A BROKEN COUNTERWEIGHT PIN OR FAILURE OF THE COUNTERWEIGHT BUSHING. THE BUSHING WAS FOUND IN SEVERAL PIECES. (K)

2008FA0000151		LYC		CRANKSHAFT	CRACKED
3/5/2008		O360A4A		13B2713485	ENGINE

CRANKSHAFT HAS VERY LARGE RADIAL CRACKS AT THE BASE OF THE FORWARD THRUST FACE, EXTENDING APPROX. 85% OF THE WAY AROUND THE SHAFT. APPEARS TO HAVE BEEN A FRONTAL IMPACT ON THE CRANKSHAFT DRIVING IT REWARD IN THE ENGINE AND IMPACTING THE CRANKCASE.

2008FA0000177		PWA		RELAY	BURNED
2/29/2008		PT6A60A		5038004811	

UPON LANDING A POWER/ TORQUE SURGE OF THE LT ENGINE WAS ENCOUNTERED. THE INCREASED THRUST FROM THE LT SIDE AND ICE COVERED RUNWAY CONDITIONS CAUSED AN OFF RUNWAY INCURSION. INVESTIGATION OF THE GROUND FINE SOLENOID SYSTEM RESULTED IN A BURNED K4 RELAY ON THE AFFECTED PC CARD CONTROLLING THE GROUND FINE SYSTEM ON THE LT SIDE.

03252008	AMD		MESSIER	HOLDER	BROKEN
3/25/2008	FALCON200			D52177	ACTUATOR

THE PACKING HOLDER P/N D52177 BROKE IN (2) PIECES CAUSING HYDRAULIC FLUID LOSS. THIS PART HAD BEEN

MODIFIED IAW SB F200-110 TO PREVENT FUTURE FAILURES. THIS IS THE SECOND PACKING HOLDER FOUND TO BE BROKEN AFTER MODIFICATION. BOTH PARTS WERE MODIFIED AND IDENTIFIED SRD IAW THE S/B.

325	AMD	MESSIER	HOLDER	BROKEN
3/25/2008	FALCON200		D52177	ACTUATOR

THE PACKING HOLDER BROKE IN 2 PIECES CAUSING HYDRAULIC FLUID LOSS. THIS PART HAD BEEN MODIFIED IAW SB F200-110 TO PREVENT FUTURE FAILURES. THIS IS THE SECOND PACKING HOLDER FOUND TO BE BROKEN AFTER MODIFICATION. BOTH PARTS WERE MODIFIED AND IDENTIFIED SDR IAW THE SB.

2008FA0000255	AMD	PWC	CIRCUIT BREAKER	MISINSTALLED
12/2/2007	FALCON2000	PW308C		

MAU 1B AND AGM 2 FAIL IN FLIGHT AND RECOVERED AFTER 3 SECONDS. SHUNT (IPC 24-05-10, ITEM 210) INSECURED ON BREAKER, ELECTRIC ARC. ONE SCREW ON BREAKER L501X, TOO THREAD LENGTH OVERSIZED. RESULTS: EXCHANGE SHUNT AND BREAKERS. (K)

DJSR20080417	AMD	GARRTT	AIR DATA MODULE	MALFUNCTIONED
4/17/2008	FALCON20C5	TFE731*	065008206	COCKPIT

ALTIMETER SYSTEMS SHOWING MISCOMPARE (EXCEEDING 50 FT AT 5000 FT).

2008FA0000156	AMD	GARRTT	LIFE RAFT	INOPERATIVE
2/22/2008	FALCON50MYST	TFE731*	5A320410312	CABIN

RECEIVED SUBJECT LIFE RAFT FOR ANNUAL INSPECTION FROM REGISTERED OWNER. THE LIFE RAFT WAS RECEIVED BY THIS REPAIR STATION IN A PACKED CONDITION AND IN ITS "AS-REMOVED" CONDITION FROM THE AIRCRAFT. DURING DISASSEMBLY AND PRELIMINARY INSPECTION OF SUBJECT LIFE RAFT, FOUND A STEEL SAFETY PIN INSTALLED IN THE LIFE RAFT INFLATION BOTTLE. THE LIFE RAFT WOULD NOT HAVE BEEN OPERABLE WITH THIS SAFETY PIN INSTALLED HAD THIS LIFE RAFT BEEN CALLED UPON TO FUNCTION IN AN ACTUAL EMERGENCY.

2008FA0000193	AMRGEN	GRUMAV	SUPPORT BRACKET	CRACKED
3/21/2008	AA5A		902010XXX	ZONE 600

WHILE COMPLYING WITH AD 79-22-04 ON AILERON CONTROL SYS INSP AND SB 165A, 100 HOUR REPETITIVE INSP, FOUND LT OB AILERON HINGE SUPPORT BRACKET, 902010-501 CRACKED. CRACKED VISUALLY SEEN WITH OUT DISASSEMBLY USING A STRONG LIGHT AND SYSTEM LOADING. HOWEVER, WHEN REMOVED FOR REPLACEMENT WITH NEW SUPPORT, THERE WERE 3 ADDITIONAL CRACKS GIVING A TOTAL OF (4) ON THIS COMPONENT, PAINT AND LOCATION OF CRACKS PRACTICALLY IMPOSSIBLE TO DISTINGUISH WITH COMPONENT INSTALLED.

2008FA0000267	BBAVIA	LYC	RIB	BOWED
4/7/2008	7GCAA	O320B2B		RT AILERON

REMOVED THE RT AILERON DUE TO REPORTS OF BINDING BETWEEN THE AILERON AND WING DURING AEROBATIC MANEUVERS. ON THE GROUND THE IB AILERON TO AILERON BAY RIB CLEARANCE WAS APPROX .0625 INCH. IAW TECH SUPPORT THE CLEARANCE SHOULD BE .2500 INCH. THE WING IB AILERON BAY RIB APPEARED TO HAVE BOWED DUE TO FABRIC SHRINKAGE OVER TIME, CAUSING THE INTERFERENCE. THE IB AILERON RIB FABRIC WAS OPENED, THE RIB WAS RELOCATED OB .1875 INCH, AND THE FABRIC WAS REPAIRED UTILIZING NEW TAPES AND THE SUPERFLITE PROCESS. THE REPAIR WAS PAINTED WITH FLEX AGENT ADDED. IAW TECH SUPPORT, AILERON BALANCING WAS NOT REQUIRED. REINSTALLED AILERON. AILERON CLEARANCE AND OPERATION SATISFACTORY. (K)

SJ3R080124001	BEECH	PWC	CAM FOLLOWER	BROKEN
1/24/2008	1900D	PT6A42A	B6545	PROP BLADE

REMOVED DUE TO SUSPECTED INTERNAL HUB COMPONENT FAILURE. BLADE S/N 4152 WAS FOUND TO ROTATE FREELY +/- 12.5 DEGREE POST FIRST GROUND RUN AFTER INSTALLATION. INSPECTION AFTER DISASSEMBLY REVEALED ONE BROKEN B-6545 PITCH CHANGE KNOB CAM FOLLOWER. THIS PART WAS INSTALLED NEW AT OVERHAUL AND FAILED ON FIRST GROUND RUN.

2008FA0000262	BEECH	PWA		HINGE	BROKEN
4/1/2008	200BEECH	PT6A41			ENG COWLING

ENGINE ICE VANE HINGE ASSY, BROKEN. HINGE ASSY BREAKS AND FRAGMENTS INTO SMALL PIECES THAT TEND TO BE INGESTED INTO ENGINE, CAUSING FOD. (K)

2008FA0000154	BEECH			RIB	CRACKED
2/15/2008	400A			45A2111XXXX	HORIZONTAL STAB

FOUND SEVERAL CRACKS (25) IN RIB TO LOWER SKIN ATTACH FLANGES, AT RIVET HOLES , IN 3 LT, AND 4 RT HORIZONTAL STABILIZER INNER SPAR RIBS. RIBS NR 234 ON LT SIDE, AND NR 2345 ON RT SIDE. AFFECTED.

433858831	BEECH	GARRTT		FMC	FAULTED
1/29/2008	400A	TFE7315BR		8220891008	

UNCOMMANDED 360 DEGREE TURN AS COMMANDED BY THE FMS. REF SB 0057-05 DATED DECEMBER 21, 2005 DELETING A WAYPOINT MAY CAUSE THE FMS TO INSERT AND FLY AN UNINTENDED TURN. KNOWN PROBLEM WITH OPTIONAL SOLUTION FOR FMS6000 INSTALLED IN AC, NO SOLUTION FOR FMS5000 INSTALLED IN AC.

2008FA0000155	BEECH	PWA		RIB	CRACKED
2/15/2008	400A	JT15D5		45A2111XXXX	HORIZONTAL STAB

FOUND SEVERAL CRACKS (25) IN RIB TO LOWER SKIN ATTACH FLANGES, AT RIVET HOLES , IN 3 LT , AND 4 RT HORIZONTAL STABILIZER INNER SPAR RIBS. RIBS NR 234 ON LT SIDE, AND NR 2345 ON RT SIDE AFFECTED.

FAA2008123001	BEECH	CONT	WOODWARD	PILOT VALVE	BROKEN
1/23/2008	58	IO550*		5221220F	PROP GOVERNOR

PROPELLER WENT TO FEATHER IN FLIGHT AND WAS UNABLE TO UNFEATHER. AFTER RECEIVING THE GOVERNOR FOR INSPECTION IT WAS DISCOVERED THAT THE BOTTOM END OF THE PILOT VALVE (P/N 5221-220) HAD BROKEN OFF AND WAS MISSING. IT WAS PRESUMED THAT IT EXITED THE BOTTOM END OF THE DRIVE GEAR AND ENTERED THE ENGINE SUMP. THE OPERATOR WAS NOTIFIED AND THE MISSING PIECE WAS RETRIEVED.

2008FA0000264	BEECH	CONT		PUMP	FAILED
4/2/2008	58	IO550*		RA442CW12	VACUUM SYSTEM

VACUUM PUMP FAILED TO DEVELOP ANY AIR OUTPUT UPON INSTALLATION. REMOVED PUMP AND INSPECTED, SUSPECT VANES ARE NOT SLIDING OUT AGAINST CYLINDER WALL THUS NOT ALLOWING ANY AIR TO BE DEVELOPED. (K)

2008FA0000088	BEECH	CONT		CAM	WORN
2/7/2008	58	IO550C		6310	MAGNETO

100 RPM MAGNETO DROP ON PRE-FLIGHT RUN-UP. INSPECTED ALL FOUR MAGNETOS ON BOTH ENGINES.FOUND ALL MAGNETO CAMS WORN. NO LUBRICATION WAS FOUND ON THE CAMS. THESE MAGNETOS HAD 444.0 HRS TIME SINCE NEW, AND HAD COME INSTALLED ON NEW ENGINES. THEY HAD NOT HAD THEIR FIRST 500 HR INSPECTION, SO HAD NEVER BEEN INSPECTED/OPENED SINCE NEW. SLICK 6310 MAGNETOS, SN'S: 06121306, 06121346, 06120367, AND 06121304.

2008FA0000240	BEECH	LYC		BOLT	FAILED
3/7/2008	65B80	IGO540B1A			CONNECTING ROD

NR 1 ENGINE SHUTDOWN IN FLIGHT. SUSPECTED NR 7 CONNECTING ROD BOLT FAILURE. CAUSING CYL SEPARATION FROM CASE AND CRANK CASE CRACK. AC LANDED SAFELY WITHOUT OTHER DAMAGE. (K)

WS9R030608001	BEECH	CONT		CYLINDER	CRACKED
3/6/2008	A36	IO550B		AEC631397	ENGINE

CRACK BETWEEN 3RD AND 4TH CYLINDER HEAD, COOLING FIN.

VIB8368K	BEECH			BRACE	CORRODED

3/20/2008	B100			NLG

DISASSEMBLED NLG DURING SCHEDULED MAINT AND FOUND SIGNIFICANT CORROSION OVER MOST OF THE NOSE LANDING GEAR V BRACE, PN 50-820204. WE ALSO FOUND A CRACK OF 0.008 INCH IN THE NOSE BARREL, PN 99-820100-5, WHERE IT LOOKED LIKE IT HAD BEEN REPAIRED IN THE PAST. WE ALSO FOUND A CRACK OF 0.020 INCH IN THE V BRACE, PN 99-810028-989, OF THE LT LANDING GEAR.

2008FA0000184	BEECH	PWA	COMPRESSOR	DAMAGED
3/4/2008	B200	PT6A42	304997801	RT ENGINE

DURING PERFORMANCE OF A SCHEDULED 1800 HOUR HOT SECTION INSPECTION OF THE RT ENGINE, AT 1771 HOURS AND 7 YEARS TIS SINCE OVERHAUL, INITIAL VISUAL INSPECTION OF THE CT BLADES TIP CLEARANCE REVEALED CLEARANCES IN EXCESS OF ALLOWABLE FOR RETURN TO SERVICE. IT WAS NOTED THAT THERE WAS SOME METAL BUILD-UP ON THE SHROUD SEGMENTS IN THE 4 O'CLOCK THRU 6 O'CLOCK POSITIONS. NO IMPACT DAMAGE WAS NOTED TO ANY OF THE CT BLADES OR THE CT NOZZLE. SEVERAL CRACKS WERE ALSO NOTED IN THE OUTER SECTION OF THE COMBUSTION LINER. AFFECTED COMPONENTS WILL BE SENT TO A MFG APPROVED REPAIR FACILITY FOR REPAIRS OR REPLACEMENT AS NECESSARY.

2008FA0000183	BEECH	PWA	TURBINE	DAMAGED
3/4/2008	B200	PT6A42	304997801	ENGINE

DURING PERFORMANCE OF A SCHEDULED 1800 HOUR HOT SECTION INSPECTION OF THE RT ENGINE, AT 1771 HOURS AND 7 YEARS TIME IN SERVICE SINCE OVERHAUL, INITIAL VISUAL INSPECTION OF THE CT BLADES TIP CLEARANCE REVEALED CLEARANCES IN EXCESS OF ALLOWABLE FOR RETURN TO SERVICE. IT WAS NOTED THAT THERE WAS SOME METAL BUILD-UP ON THE SHROUD SEGMENTS IN THE 4 O'CLOCK THRU 6 O'CLOCK POSITIONS. NO IMPACT DAMAGE WAS NOTED TO ANY OF THE CT BLADES OR THE CT NOZZLE. SEVERAL CRACKS WERE ALSO NOTED IN THE OUTER SECTION OF THE COMBUSTION LINER. AFFECTED COMPONENTS WILL BE SENT TO A P&WC APPROVED REPAIR FACILITY FOR REPAIRS OR REPLACEMENT AS NECESSARY.

2008FA0000137	BEECH	PWA	ARM	WORN
1/23/2008	B300B350C	PT6*	358250549	STEERING

NOSE GEAR STEERING ARM WORN EXCESSIVELY AT ROD END ATTACHMENT POINT FOR STEERING PUSH PULL TUBE. LOSS OF NOSE GEAR STEERING WOULD OCCUR IF ARM WERE TO BREAK. THE ORIGINAL .2500 INCH BOLT HOLE WAS ELONGATED TO A .5 INCH SLOT. THE ARM IS ATTACHED TO THE PILOT'S RUDDER PEDAL TORQUE SHAFT AND IS LOCATED IN A SMALL UNPRESSURIZED PANEL AREA BELOW THE PILOT SIDE FLOORBOARDS. INSPECTIONS ARE OVERLOOKED BECAUSE THIS SEALED PANEL IS NOT OPENED TYPICALLY DURING ROUTINE INSPECTIONS.

2008FA0000181	BEECH	CONT	PISTON	FAILED
3/4/2008	B35	E2258	AEC633099	ENGINE

NR 6 PISTON DISINTEGRATED. CAUSE UNKNOWN. PISTON P/N AEC633099 WAS ORIGINALLY MANUFACTURED BY AIRMOTIVE ENGINEERING, INC.(AEC). ENGINE COMPONENTS, INC. (ECI) HAS SINCE BOUGHT OUT AEC. ECI HAS NOT PRODUCED THIS P/N.

2008FA0000280	BEECH	LYC	HOSE	LEAKING
1/12/2008	C23	O360A4G	16991000327	OIL COOLER

THE AC EXPERIENCED AN EMERGENCY LANDING AFTER THE PILOT REPORTED SMOKE IN THE COCKPIT. INSP AND INVESTIGATION REVEALED AN OIL COOLER LINE HAD BEEN MAKING CONTACT WITH THE NR4 EXHAUST STACK (RISER), EVENTUALLY CAUSED THE FIRE SHEATHING AND OIL LINE TO DETERIORATE, CAUSING THE OIL TO LEAK INTO THE HEAT EXCHANGER, WHICH CAUSED SMOKE IN THE COCKPIT OBSERVED BY THE PILOT. UPON INSP, ALL BUT 16 OZ OF OIL LEAKED OUT OF ENGINE, WELL BELOW THE MINIMUM SAFE QUANTITY FOR THE MODEL INSTALLED ON THIS AC. PILOT IN THIS CASE WAS ABLE TO KEEP OIL PRESSURE UPON LANDING, THUS AVOIDING A POTENTIALLY SERIOUS SITUATION. AS A RESULT OF THIS OCCURRENCE, ENGINE HAD TO BE DISASSEMBLED, CLEANED, INSPECTED, REPAIRED AS NECESSARY, AND REASSEMBLED. THE RESULTS OF THE INSP AND INVESTIGATION COULD NOT DETERMINE IF POOR MAINT PRACTICES WERE A CONTRIBUTING FACTOR FOR THE CAUSE OF THIS OCCURRENCE. IN ADDITION, THE APPLICABLE MM AND ILLUSTRATED PARTS CATALOG FOR THIS AC, IN ADDITION TO THE AC INSP AND REPAIR PRACTICES IDENTIFIED IN AC 43.13-1B, DO NOT IDENTIFY SPECIFIC INSTRUCTIONS FOR HOW TO ROUTE, CLAMP, SECURE, OR PROVIDE A MINIMUM CLEARANCE FOR OIL

COOLER HOSE ASSEMBLIES FROM POSSIBLE HEAT SOURCES (I.E. EXHAUST STACK). GIVEN THIS LIMITATION, A MECHANIC MUST EXERCISE HIS EXPERIENCE AND EXPERTISE FOR ENSURING THESE LINES ARE PROPERLY SUPPORTED AND ARE NOT RUBBING AGAINST A STRUCTURE IAW BEST PRACTICES.

2008FA0000245	BEECH	PWA	TRIM SYSTEM	ICED
4/9/2008	C90A	PT6*		ELEVATOR

WHEN THE AIRPLANE HAS SET ON THE RAMP IN THE RAIN, THEN TAKES OFF WITH A QUICK CLIMB TO COLDER TEMPERATURES AT ALTITUDE, THE ELEVATOR TRIM FREEZES. THE AUTOPILOT KICKS OFF BECAUSE IT IS UNABLE TO RESPOND. THE PILOT THEN HANDFLYS WITH THE ELEVATOR FORCE LOADED UP AND UNABLE TO TRIM. WITH LITTLE NUDGES BACK AND FORTH ON THE TRIM WHEEL FOR ABOUT 10 MINUTES, THE SYSTEM BECOMES FREE. EACH TIME I REPORT THIS TO MECHANICS, THEY INSPECT AND LUBRICATE THE SYSTEM AND REPORT EVERYTHING IS SATISFACTORY. THIS WAS MY EXPERIENCE FROM 1984 TO 2005. THE PLANE WAS NORMALLY KEPT IN A HANGAR SO OCCURRENCES WERE INFREQUENT.

IU6R232726	BOEING	MANIFOLD	BROKEN
3/6/2008	737	654484515	

FILTER BOWL BORE OF MANIFOLD BROKE OFF AT THE THREADS.

RI3R200800001	BOEING	TSU	CONTAMINATED
3/31/2008	737*	403501	INTERNAL

WHILE PERFORMING TROUBLESHOOTING AND REPAIR OF 4035-01 SERIES TRANSIENT SUPPRESSION UNITS (TSU) IAW COMPONENT MM 28-44-64, REV 2, DATED 20/04/2007, IT WAS DISCOVERED THAT VARIOUS UNITS (7 TOTAL) SHOWED EVIDENCE OF CONTAMINATION ON INTERIOR SURFACES FROM WHAT APPEARS TO BE MOISTURE INTRUSION THROUGH THE CASE SEALS. AFFECTED UNITS HAVE BEEN PLACED IN QUARANTINE. IMMEDIATELY NOTIFIED THE ORIGINAL EQUIPMENT MFG AND PRODUCTION AUTHORITY HOLDER, OF THE FINDINGS. COORDINATING WITH ENGINEERING AND QUALITY REPRESENTATIVES ON FURTHER ACTION AND FINAL DISPOSITION. AFFECTED UNITS TO REMAIN IN QUARANTINE UNTIL GUIDANCE IS RECEIVED. CONSULTED WITH FSDO, PMI. RECOMMENDED ACTION: SUBMIT SDR IAW 14 CFR PART 145.221 AND REPAIR STATION QUALITY CONTROL MANUAL PROCEDURES. AFFECTED PN 4035-01 AFFECTED SN: 0123, 0408, 1034, 1115, 1313, 1403, 1888. UNITS USED ON AC FUEL QUANTITY INDICATING SYS, INSTALLED IAW STC00847S-28-2.

RI3R200800002	BOEING	TSU	CONTAMINATED
4/9/2008	737*	403501	

WHILE PERFORMING PRELIMINARY INSPECTION AND TROUBLESHOOTING OF THE TRANSIENT SUPPRESSION UNIT (TSU) 4035-01, S/N 1308, IT WAS DISCOVERED THAT THE UNIT SHOWED EVIDENCE OF INTERNAL CONTAMINATION. THE CONTAMINATION APPEARS TO BE CAUSED BY MOISTURE INGRESS INTO THE UNIT. THE UNIT HAS BEEN PLACED IN QUARANTINE, AND PAH/OEM HAS BEEN NOTIFIED OF THE FINDING.

SROM2008005	BOEING	TORQUE BOX	CORRODED
4/6/2008	737205		FUSELAGE

CORROSION BETWEEN STA BS 1118 AND STA BS 1138 IN THE RIGHT HAND TORQUE BOX, BY THE APU INLET DUCT. CORROSION BETWEEN STA BS 1118 AND STA BS 1138 IN THE RIGHT HAND TORQUE BOX, BY THE APU INLET DUCT REMOVED IN ACCORDANCE WITH BOEING 737 STRUCTURAL REPAIR MANUAL (SRM), 51-10-06. ORIGINAL MATERIAL 0.063, AMOUNT OF REMOVED MATERIAL 0.025, OUT OF LIMITS IN ACCORDANCE WITH BOEING 737 STRUCTURAL REPAIR MANUAL (SRM), 51-10-01, PAGE 45, DETAIL V. FORMED SECTION REPAIR CARRIED OUT IN ACCORDANCE WITH BOEING 737 STRUCTURAL REPAIR MANUAL (SRM), 51-40-03.

SROM2008013	BOEING	ATTACH FITTING	CRACKED
4/6/2008	737205		FUSELAGE

CRACK IN INTERCOSTAL ATTACH CLIP AT STA BS 360 STR 11L. REPLACED INTERCOSTAL ATTACH CLIP AT STA BS 360 STR 11L IN ACCORDANCE WITH BOEING 737 STRUCTURAL REPAIR MANUAL (SRM), 51-10-2, FIGURE 1, 51-20-1, FIGURE 7, 51-30-2, 7.D.(6), AND 51-30-2, FIGURE 7,3,11 AND 12. REFERENCE KELOWNA FLIGHTCRAFT NON-ROUTINE CARD 647, DATED 03/05/08.

SROM2008015	BOEING	FRAME	CRACKED

4/6/2008	737205		FUSELAGE

CRACK ON BODY FRAME INNER CHORD STA BS 616 LEFT HAND AT STUB BEAM LOWER CHORD. REPAIRED BODY FRAME INNER CHORD STA BS 616 LT AT STUB BEAM LOWER CHORD IN ACCORDANCE WITH BOEING SB 737-53A-1254. REFERENCE KELOWNA FLIGHTCRAFT NON-ROUTINE CARD 672, DATED 03/05/08.

SROM2008016	BOEING	BUSHING	LOOSE
4/6/2008	737205		HORIZ STAB

LOOSE BUSHING ON STABILIZER SCREW JACK LOWER RIGHT HAND MOUNTING STRUCTURE (P/N 6-37464-1). REPLACED BUSHING ON STABILIZER SCREW JACK LOWER RT MOUNTING STRUCTURE IN ACCORDANCE WITH FAA DER APPROVED FORM 8110-3, 078-1236-08-473 AND ASI SOLUTIONS DRAWING 5340473-1, REV IR, DATED MARCH 14, 2008. REFERENCE NON-ROUTINE CARD 740, DATED 03/06/08.

SROM2008001	BOEING	SUPPORT	GOUGED
4/6/2008	737205	654869089	LT MLG WW

LEFT HAND MAIN LANDING GEAR WHEEL WELL FAIRING SUPPORT GOUGED AT AFT OUTBOARD SIDE. REPAIRED LT MLG WHEEL WELL SUPPORT AT AFT OUTBOARD SIDE IN ACCORDANCE WITH FAA DER APPROVED FORM 8110-3, 073-1236-08-476 AND ASI SOLUTIONS DRAWING 5350476-1, REV IR, DATED MARCH 13, 2008. REFERENCE NON-ROUTINE CARD 27, DATED 02/27/08.

SROM2008011	BOEING	STRINGER CLIP	DAMAGED
4/6/2008	737205		FUSELAGE

STRINGER TIE CLIP DAMAGED AT STA BS 500A, STR 25R. REPLACED STRINGER TIE CLIP AT STA BS 500A STR 25R IN ACCORDANCE WITH BOEING 737 STRUCTURAL REPAIR MANUAL (SRM), 51-10-1, PAGE 9, SECTION 7 AND 51-30-03. REFERENCE NON-ROUTINE CARD 590, DATED 03/04/08.

SROM2008014	BOEING	ATTACH FITTING	CRACKED
4/6/2008	737205		FUSELAGE

CRACK IN INTERCOSTAL ATTACH CLIP STA BS 294.5 STR 11L. REPLACED INTERCOSTAL ATTACH CLIP STA BS 294.5 STR 11L IN ACCORDANCE WITH BOEING 737 STRUCTURAL REPAIR MANUAL (SRM), 51-10-2, FIGURE 1, 51-20-1, FIGURE 7, 51-30-2, 7.D.(6), AND 51-30-2, FIGURE 7, 3, 11 AND 12. REFERENCE NON-ROUTINE CARD 648, DATED 03/05/08.

SROM2008004	BOEING	FLOORBEAM	CORRODED
4/6/2008	737205		FUSELAGE

CORROSION FOUND ON FLOORBEAM STA BS 1016 BL 5 THRU BL 38 LEFT HAND. CORROSION ON FLOORBEAM STA BS 1016 BL 5 THRU BL 28 LEFT REMOVED AND FOUND TO BE BEYOND LIMITS IN ACCORDANCE WITH BOEING 737 STRUCTURAL REPAIR MANUAL (SRM), 53-10-01, FIGURE 1. FLOORBEAM REPAIRED IN ACCORDANCE WITH BOEING 737 STRUCTURAL REPAIR MANUAL (SRM), 51-40-04, FIGURE 1. REFERENCE NON-ROUTINE CARD 19, DATED 03/04/08.

SROM2008009	BOEING	FITTING	CRACKED
4/6/2008	737205		FUSELAGE

CLIP CRACKED AT STA BS 1006 STR 21L. REPLACED CLIP AT STA BS 1006 STR 21L IN ACCORDANCE WITH BOEING 737 STRUCTURAL REPAIR MANUAL (SRM), 51-10-01 AND 51-30-02. REFERENCE NON-ROUTINE CARD 578, DATED 03/04/08.

SROM2008010	BOEING	FITTING	CORRODED
4/6/2008	737205		FUSELAGE

STRINGER TO FRAME CLIP REQUIRES BLENDING AT STA BS 907 STR 25L (REAR CARGO PIT). INSTALLED NEW CLIP AT STA BS 907 STR 25L IN ACCORDANCE WITH BOEING 737 STRUCTURAL REPAIR MANUAL (SRM), 51-30-03. REFERENCE NON-ROUTINE CARD 586, DATED 03/04/08.

SROM2008018	BOEING	FLOORBEAM	CRACKED

4/6/2008	737205			FUSELAGE

LOWER LONGITUDINAL FLOORBEAM CHORD CRACKED AT LBL 24.5 STA BS 663. REPLACED LOWER LONGITUDINAL FLOORBEAM CHORD AT LBL 24.5 STA BS 663 IN ACCORDANCE WITH BOEING 737 STRUCTURAL REPAIR MANUAL (SRM), 51-30-01 AND BOEING DRAWING 65-45410. REFERENCE NON-ROUTINE CARD 843, DATED 03/18/08.

SROM2008002	BOEING		FLOORBEAM	CORRODED
4/6/2008	737205			FUSELAGE

CORROSION ON AFT GALLEY FLOORBEAM AT STA BS 980 RBL 4. BLENDED AND FOUND CORROSION ON AFT GALLEY FLOORBEAM AT STA BS 980 RBL 4 TO BE BEYOND LIMITS. REPAIRED AFT GALLEY FLOORBEAM AT STA BS 980 RBL 4 IN ACCORDANCE WITH BOEING 737 STRUCTURAL REPAIR MANUAL (SRM), 51-40-4. REFERENCE NON-ROUTINE CARD 488, DATED 03/04/08.

SROM2008007	BOEING		BAR	CRACKED
4/6/2008	737205	87513	43100001	SEAT

REPAIR CRACKED SPREADER BARS ON PASSENGER SEATS. REPAIRED CRACKED SPREADER BARS ON PASSENGER SEATS IN ACCORDANCE WITH CPAI EO C007-2525-B737-01 AND FAA DER APPROVED 8110-3, 080-1226-08-471 AND ASI DRAWING 2520471-1, REV IR, DATED MARCH 19, 2008. REFERENCE KELOWNA FLIGHTCRAFT NON-ROUTINE CARD 160, DATED 02/28/08.

SROM2008006	BOEING		SKIN	CRACKED
4/6/2008	737205			FUSELAGE

CRACK IN FUSELAGE SKIN AT STA BS 760 STR 19L, (NDT CONFIRMED CRACK). REPAIRED FUSELAGE SKIN AT STA BS 760 STR 19L IN ACCORDANCE WITH BOEING 737 STRUCTURAL REPAIR MANUAL (SRM), 53-30-03, FIGURE 48, FASTENERS INSTALLED IN ACCORDANCE WITH SRM 51-30-02. REFERENCE NON-ROUTINE CARD 542, DATED 03/04/08.

SROM2008012	BOEING		SKIN	DAMAGED
4/6/2008	737205			FUSELAGE

LIGHTNING STRIKE AT STA BS 933 STR 25.5R. REPAIRED IN ACCORDANCE WITH BOEING 737 STRUCTURAL REPAIR MANUAL (SRM), 53-30-03, FIGURE 23 (PERMANENT REPAIR), SECTION 1, PARAGRAPH 3., (NDT08-0509). REFERENCE NON-ROUTINE CARD 602, DATED 03/04/08.

SROM2008019	BOEING		FLOORBEAM	CRACKED
4/6/2008	737205			FUSELAGE

LOWER LONGITUDINAL FLOORBEAM CHORD CRACKED AT RBL 24.5 STA BS 663. REPLACED LOWER LONGITUDINAL FLOORBEAM CHORD AT RBL 24.5 STA BS 663 IN ACCORDANCE WITH BOEING 737 STRUCTURAL REPAIR MANUAL (SRM), 51-30-01 AND BOEING DRAWING 65-45410. REFERENCE NON-ROUTINE CARD 844, DATED 03/18/08.

SROM2008022	BOEING		KEELBEAM	CORRODED
4/5/2008	737205			FUSELAGE

LOWER CHORD OF KEEL BEAM IN MLG HAS CORROSION ON VERTICAL AND HORIZONTAL FLANGES IN SEVERAL AREAS FROM STA BS 663-727 LBL 615. REPAIRED LOWER CHORD OF KEEL BEAM ON LT SIDE BETWEEN STA BS 663 THRU 727 IN ACCORDANCE WITH FAA DER APPROVED FORM 8110-3, 095-1236-08-483 AND ASI SOLUTIONS DRAWING 5310483-1, REV IR, DATED APRIL 4, 2008. CORROSION BLENDED IN ACCORDANCE WITH BOEING 737 STRUCTURAL REPAIR MANUAL (SRM), 51-10-06 AND FAIRED AT A 10:1 RATIO IN ACCORDANCE WITH SRM 51-10-06. ALL PARTS TREATED AND PROTECTED IN ACCORDANCE WITH SRM 51-10-2. ALL FASTENERS INSTALLED IN ACCORDANCE WITH SRM 51-30-2. REFERENCE NON-ROUTINE CARD 876, DATED 03/31/08.

SROM2008003	BOEING		FLOORBEAM	CORRODED
4/6/2008	737205			FUSELAGE

CORROSION ON UPPER CAP OF FLOORBEAM AT STA BS 294.5 BETWEEN LBL 12 AND RBL 50. CORROSION ON UPPER CAP OF FLOORBEAM AT STA BS 294.5 BETWEEN LBL 12 AND RBL 50 BLENDED BEYOND LIMITS IN ACCORDANCE WITH BOEING 737 STRUCTURAL REPAIR MANUAL (SRM), 53-10-1. REPAIRED IN ACCORDANCE WITH

BOEING 737 STRUCTURAL REPAIR MANUAL (SRM), 53-10-9. REFERENCE NON-ROUTINE CARD 494, DATED 03/04/08.

SROM2008008	BOEING		KEELBEAM	CORRODED
4/6/2008	737205			FUSELAGE

LOWER CHORDS OF KEEL BEAM IN MAIN LANDING GEAR HAS CORROSION AT LOWER FLANGE IN SEVERAL AREAS UPPER & LOWER SURFACES FROM STA BS 663-727 RBL 6.5 & LBL 6.5. REPAIRED LOWER CHORD OF KEEL BEAM IN MLG WHEEL WELL AT LOWER FLANGE IN ACCORDANCE WITH BOEING MESSAGE 1-789220434-4, DATED MARCH 28, 2008. FASTENERS INSTALLED IN ACCORDANCE WITH BOEING 737 STRUCTURAL REPAIR MANUAL (SRM), 51-30-2. REFERENCE NON-ROUTINE CARD 570, DATED 03/04/08.

SROM2008020	BOEING		FLOORBEAM	CRACKED
4/6/2008	737205			FUSELAGE

CORROSION ON FLOOR I-BEAM AT STA BS 344 LBL 18 THRU RBL 39. REPAIRED FLOOR I-BEAM AT STA BS 344 LBL 18 THRU RBL 39 IN ACCORDANCE WITH BOEING 737 STRUCTURAL REPAIR MANUAL (SRM), 53-10-9, FIGURE 5. REFERENCE NON-ROUTINE CARD 858, DATED 03/25/08.

SROM2008021	BOEING		TORQUE BOX	CRACKED
4/6/2008	737205			FUSELAGE

CRACKED APU TORQUE BOX WEB AT STA BS 1115 RBL 2. HFEC CARRIED OUT IN ACCORDANCE WITH BOEING 737 NDT MANUAL 51-00-00, FIGURE 23, PART 6 ON A CUT-OUT ON THE APU TORQUE BOX, STA BS 1115. NO DEFECTS EVIDENT (NDT08-0461). APU TORQUE BOX WEB AT STA BS 1115 RBL 2 REPAIRED IN ACCORDANCE WITH BOEING 737 STRUCTURAL REPAIR MANUAL (SRM), 51-40-01, FIGURE 1 AND INSTALLED IN ACCORDANCE WITH BOEING 737 STRUCTURAL REPAIR MANUAL (SRM), 51-30-02, FIGURE 3 AND 11. REFERENCE NON-ROUTINE CARD 859, DATED 03/25/08.

SROM2008017	BOEING	PWA	BRACKET	CRACKED
4/6/2008	737205	JT8D17A	65MK781031	NR 1 ENGINE

LEFT HAND ENGINE TAILPIPE CRACKED AT BRACKET MOUNT (3 O'CLOCK POSITION). REPAIRED LEFT HAND ENGINE TAILPIPE BRACKET MOUNT (3 O'CLOCK POSITION) IN ACCORDANCE WITH FAA DER APPROVED FORM 8110-3, 073-1236-08-477 AND ASI SOLUTIONS DRAWING 7830477-1, REV IR, DATED MARCH 18, 2008. REFERENCE NON-ROUTINE CARD 826, DATED 03/11/08.

2008FA0000259	BOMBDR	RROYCE	SLAT SYSTEM	MALFUNCTIONED
3/14/2008	BD7001A10	BR700710A110		

FLIGHT CREW REPORTED THAT SHORTLY AFTER ROTATION (AFTER T/O) THEY HAD A (FLICKERING) SLAT HALF SPD AND SLAT/FLAP HALF SPD EICAS MESSAGE. SHORTLY THEREAFTER THEY HAD AN AMBER SLAT FAIL, STALL WARN ADVANCE EICAS MESSAGE, C/B TRIP (E-2 SLAT/FLAP PWR 2) AND FLIGHT SPOILER FAULT EICAS MESSAGE. THEY WERE ABLE TO LAND AT HOME BASE WITH SLATS OUT/FLAPS 0, WITHOUT INCIDENT (SLATS WERE AVAILABLE, FLAPS WERE NOT AVAILABLE. THE CAS MESSAGES WERE STILL PRESENT WHEN THEY PARKED THE AC AND THE FOLLOWING FDE MESSAGES: RT MFS NR 3 ACTUATOR/WRG 27656232SX; FLT CONT 2B FAULT (FCU 2 27654282SX; FLAP FAIL LATCHED FAULT NR1 2751000STD. TROUBLESHOOTING BY MAINT AND DEBRIEF FROM THE FLT CREW REVEALED A BOTTLE OF DRINKING WATER HAD BEEN SPILLED IN THE GALLEY AREA; THIS WATER MADE ITS WAY FROM THE GALLEY THRU THE FLOORBOARDS AND INTO THE AVIONICS BAY. THE NR 2 FLAP SLAT CONTROL UNIT (FSCU) AND THE NR2 FLIGHT CONTROL UNIT (FCU) WERE FOUND TO BE SOAKED IN WATER. THERE WERE INSULATION BAGS FOUND WET ALSO. THERE HAVE BEEN OTHER OCCURRENCES OF WATER ENTERING THE AVIONICS BAY AND MFG HAS BEEN MADE AWARE OF THEM. (K)

2008FA0000258	CESSNA	CONT	TAPE	LOOSE
2/28/2008	140	C90*		WING

DURING FLIGHT, THE FABRIC PATCH CAME OFF. THE AC WAS LANDED WITH SOME DIFFICULTY BUT WITHOUT INCIDENT. IT IS SPECULATED THE AIR STREAM GOT UNDER A LOOSE TAPE AND LIFTED THE ENTIRE PATCH FROM THE WING INCLUDING RIPPING THE FABRIC CLIPS OUT OF THE RIBS. IT IS FURTHER SPECULATED THE PILOTS PREFLIGHT HAD FAILED TO IDENTIFY A POTENTIAL PROBLEM ARISING FROM A LOOSE TAPE. NEW SYS VI DIFFERS FROM THE OLDER PROCESS IN THE TYPE OF BASE PRIMER AND FINISHING PAINT. CURRENT SYS CALLS FOR BRUSHING A COAT OF THINNED U500 ADHESIVE WHERE THE TAPE WILL BE LAID. THIS IS ALLOWED TO DRY.

TAPE IS THEN LAID DOWN AND BRUSHED WITH CEMENT, WORKING THE CEMENT UP INTO THE WEAVE OF THE TAPE AND PAYING SPECIAL ATTENTION TO WORKING THE EDGES DOWN WELL TO SECURE. TO PREVENT ANY FUTURE PROBLEMS WITH THIS AC THE REPAIR TO THE WING WILL BE MADE BY APPLYING NEW FABRIC TO THE ENTIRE UPPER SURFACE OF THE WING AND OVERLAPPING FABRIC AROUND THE L/E AS OUTLINED INT THE MANUAL FOR NEW INSTALLATIONS. IN ADDITION PINKED EDGE TAPES WILL BE USED IN PLACE OF THE STRAIGHT EDGED TAPES OF THE OLDER REPAIR AND INSTALLATION. THIS WILL ALLOW FOR BETTER ADHESION DUE TO THE INCREASED SURFACE AREA. AS THE LT WING WAS ALSO REPAIRED IN A SIMILAR MANNER AT THE SAME DATE, THE EXISTING UPPER FABRIC WILL ALSO BE REPLACED IN A SIMILAR MANNER. INSP OF THE RT WING HAS REVELED NO SIGNS OF A PROBLEM BUT IT HAS BEEN DETERMINED TO PROCEED WITH THIS ADDITIONAL WORK IN THE INTEREST OF SAFETY. (K)

2008FA0000201	CESSNA	CONT	CESSNA	FLAME TUBE	RUPTURED
3/18/2008	150D	O200A			MUFFLER

RT MUFFLER P/N 0450400-26 WAS REMOVED FOR CYLINDER REPLACEMENT, INSP REVEALED DETERIORATED FLAME TUBES IN OUTLET PIPE AND NR1 INLET PIPE. OUTLET PIPE FLAME TUBE IS NOT READILY VISIBLE LOOKING UP TAIL PIPE. NO ENTRIES IN LOGBOOK INDICATING REPLACEMENT OF EITHER MUFFLER.

2008FA0000198	CESSNA	CONT	PISTON	CRACKED
3/18/2008	150D	O200A	SA530348P15	NR 3 CYLINDER

REMOVAL OF NR 3 CYLINDER FOR REPLACEMENT REVEALED A 1.5 INCH CRACK IN THE UPPER PISTON SKIRT STARTING FROM THE BOTTOM OF THE PISTON. 885 HOURS SINCE NEW.

2008FA0000200	CESSNA	CONT	CYLINDER	CRACKED
3/18/2008	150D	O200A		NR 1

MUFFLER PRESSURE TEST REVEALED CRACKS IN NR 1 CYLINDER EXHAUST PORT, FWD SIDE. UNKNOWN CYLINDER TIME, WAS BORED .015 INCH OVERSIZE.

2008FA0000087	CESSNA	CONT	SPAR	CORRODED
2/15/2008	150G	O200*	0411129	WING

WINGS WERE PREVIOUSLY REMOVED TO FACILITATE TRANSPORTATION. INSPECTION OF THE LT AND RT FWD SPAR BEARING BLOCKS IN THE FUSELAGE (P/N 0411129) FOUND SEVERE CORROSION DAMAGE. IT APPEARS TO BE DISSIMILAR METAL CORROSION BETWEEN THE SPAR BLOCKS AND THE AN3-21A ATTACHMENT BOLTS. THIS AREA WOULD BE VERY DIFFICULT TO INSPECT WITH THE WINGS ATTACHED.

2008FA0000228	CESSNA	LYC	INTAKE VALVE	WORN
10/16/2007	152	O235L2C		CYLINDER

FOLLOWING ACCIDENT THAT RESULTED IN ENGINE FAILURE, INVESTIGATION FOUND NO COMPRESSION ON THE NR 1 CYL AND REPORTED VALVE CLEARANCE WAS 0.002 INCH. THE CYL WAS NOT REMOVED AND THE AC WAS RELEASED INTO CUSTODY. REMOVED THE NR 1 CYLINDER AND VALVES. BOTH VALVES HAD ACCELERATED WEAR TO THE VALVE SEATS WITH EVIDENCE OF LEAKAGE. LAST VALVE GUIDE CHECK WAS PERFORMED 46 HOURS EARLIER WITHIN LIMITS. (K)

2008FA0000220	CESSNA	CONT	CONTROL WHEEL	BROKEN
2/22/2008	172A	O300*	05131682	

ON TAXI FROM REFUELING PILOT WAS MAKING A LT TURN IN FRONT OF HANGER. PULLED CONTROL WHEEL FULL AFT (TO TAKE WEIGHT OFF OF FRONT WHEEL) CONTROL WHEEL BROKE OFF IN HIS HAND. (OUTSIDE TEM APPROX 20 DEGREES) BREAK WAS FROM LWR LT (7 OCLOCK) TO UPPER RT (2 OCLOCK). (K)

2008FA0000202	CESSNA		MOUNT	WRONG PART
3/28/2008	172D			ENGINE

AN UNKNOWN AMOUNT OF AC FIREWALL ATTACH ASSEMBLIES (ENGINE MOUNTS) THAT WERE NOT FAA-PMA APPROVED. THE MIDO ATTEMPTED TO CONTACT THE OWNER OF MFG CONCERNING THIS MATTER, HOWEVER, ALL PHONE CALLS WERE NOT RETURNED, AND CERTIFIED LETTERS NOT ACCEPTED. AS OF THIS TIME, THE COMPANY HAS CLOSED DOORS, HOWEVER, A FIREWALL ASSEMBLY WAS FOUND ON AC. THE OWNER OF THE

AIRCRAFT WAS ADVISED THAT THE PART WAS NOT APPROVED AND IT HAD TO BE REMOVED. THE MIDO WAS INFORMED OF THE UNAPPROVED MOUNT. THE MOUNT DOES NOT HAVE A PART NUMBER. THE MIDO WILL CONTACT THE FAA SUP OFFICE TO PUT OUT A NOTICE. RECOMMEND THAT INFORMATION BE DISSEMINATED TO THE AC MFG COMMUNITY TO ADVISE OWNERS, PILOTS, AND MECHANICS IF THEY HAVE ANY OF THESE MOUNTS, TO PULL THE AIRCRAFT FROM SERVICE AND CONTACT THE MIDO.

2008FA0000266	CESSNA	LYC	FUEL LINE	DEFORMED
4/9/2008	172M	O320*	1200406245	FUEL SYSTEM

DURING ANNUAL INSPECTION OF THE MAIN FUEL LINE, BELOW FLOOR, JUST AFT OF FIREWALL, WAS FOUND DEFORMED (TWISTED). PILOT DID NOT REPORT LOW POWER. (K)

2008FA0000150	CESSNA	LYC	WIRE HARNESS	DETERIORATED
3/7/2008	172R	IO360L2A	S26062	FLAP MOTOR

UPON INSPECTION OF A PHASE II INSPECTION, IT WAS DISCOVERED THAT THE WIRE BUNDLE MOUNT PN S26062 THAT HOLDS THE FLAP MOTOR WIRE HARNESS HAD DETACHED FROM THE RIB IN THE RT WING AND HAD ALLOWED THE WIRE BUNDLE TO CHAF INTO THE INSPECTION PANEL SUPPORT ON THE WING. THE WIRE BUNDLE HAD (2) WIRES CHAFED THROUGH THE INSULATION AND WAS IN CONTACT WITH THE BARE WIRE. RECOMMEND INSPECTION OF THESE MOUNTS AND REPLACE AS NEEDED, OR ON CONDITION. (K)

2008FA0000249	CESSNA	LYC	SEAL	LEAKING
2/7/2008	172RG	O360*	MS28775112	NLG ACTUATOR

AFTER REPEATED TOUCH AND GO PROCEDURES, THE AC FAILED TO RETRACT THE LANDING GEAR DUE TO A LACK OF HYDRAULIC FLUID. THIS RESULTED IN A GEAR UP LANDING. DURING THE ACCIDENT INVESTIGATION IT WAS DETERMINED THAT THE HYDRAULIC FLUID RESERVOIR WAS DEPLETED OF FLUID BY CYCLING THE LANDING GEAR. THE NLG ACTUATOR WAS LEAKING STEADILY WHILE THE HYDRAULIC PUMP WAS CYCLING. DAMAGE TO THE AC WAS LIMITED DUE TO THE PROPER EXECUTION OF EMERGENCY LANDING PROCEDURES. THERE WERE NO INJURIES. (K)

2008FA0000153	CESSNA	CONT	CHAIN	LOOSE
2/12/2008	172S	C8512F		FUEL CAP

LT FUEL GAUGE INDICATED 10 GAL. IN TANK AT ALL FUEL LEVELS. THE TANK WAS DRAINED AND ACCESS COVER REMOVED. THE FUEL CAP RETAINING CHAIN WAS FOUND TO HAVE COME LOOSE ON THE TANK END (S) HOOK AND WRAPPED AROUND THE ARM ON THE FUEL LEVEL SENDING UNIT LOCKING IT AT A 10 GAL. INDICATION.

2008FA0000104	CESSNA	LYC	WIRE HARNESS	BURNED
2/24/2008	172S	IO360L2A		INSTRUMENT PANEL

WIRING HARNESS BEHIND AUDIO PANEL WAS CHAFING ON BRACKET THAT HELPS SUPPORT STANDBY BATTERY ON THE PFD SIDE AND CAUSED WIRING TO ARC AND BURN (NOTE: HARNESS IS FOR LIGHT DIMMING OF G-1000). FOUND HARNESS PULLED HARD AGAINST BRACKET. THIS CAUSED THE WIRE TO CHAFE THROUGH THE INSTALLATION AND SHORT OUT. HOWEVER, CIRCUIT BREAKERS AND TRANSISTORS FOR THE LIGHT DIMMING CIRCUIT DID AT NO TIME POP OR FAIL AND WOULD EXPECT TO HAPPEN WHEN THEIR IS A HARD SHORT SINCE THE WIRES ARE ASSOCIATED WITH THE LIGHT DIMMING CIRCUIT. THE HARNESS WAS PULLED HARD AGAINST THE STRUCTURE AS TO CHAFE THROUGH THE INSULATION AND ARC/SCORCHED THE STRUCTURE. THE WIRE BURNED THROUGH AND ALSO, DAMAGED OTHER WIRES IN THE HARNESS. HARNESS WAS ALSO FOUND UNPROTECTED. WILL NEED TO INSPECT OTHER WIRES TO DETERMINE THE AMOUNT OF DAMAGE AND CORRECTIVE ACTION WILL BE REQUIRED. AC WAS DELIVERED 2/13/2008 AND HAD ONLY 6.3 HRS ON IT SINCE NEW.

2008FA0000216	CESSNA	LYC	NUT	LOOSE
2/4/2008	172S	IO360L2A		ENGINE

WHILE PERFORMING SB PRS-107, FOUND PN 383493 HEX NUT PLUG FINGER LOOSE. OTE: HEX NUT WILL BECOME LOOSE IF ENGINE IS WARMED UP. SUSPECT UNDERTORQUED FROM THE FACTORY. (K)

2008FA0000217	CESSNA	LYC	SERVO	UNDERTORQUED
2/4/2008	172S	IO360L2A		FUEL SYSTEM

WHILE PERFORMING SB PRS-107, FOUND PN 383493, HEX NUT PLUG FINGER LOOSE. NOTE: HEX NUT WILL BE LOOSER IF ENGINE IS WARMED UP. SUSPECT UNDERTORQUED FROM FACTORY

2008FA0000218	CESSNA	LYC		SERVO	LOOSE
2/4/2008	172S	IO360L2A			ENG FUEL

WHILE PERFORMING SB PRS-107 FOUND PN 383493 HEX NUT PLUG FINGER LOOSE. NOTE: HEX NUT WILL BE LOOSER IF ENGINE IS WARMED UP. SUSPECT UNDERTORQUED FROM THE FACTORY. (K)

ACOR032408001	CESSNA	LYC	PREAIR	PLUG	LOOSE
3/24/2008	172S	IO360L2A	RSA5	383493	FUEL SERVO

FUEL SERVO REGULATOR HEX PLUG LOOSE ON NON AFFECTED SERVO RSA-5 S/N 70402806. DATA REFERENCED AD 2008-06-51 E, SB 08-73-01, AND PRECISION SB PRS-107. SERVO HAS NOT BEEN NEW, REBUILT, OVERHAULED, OR REPAIRED ON OR SINCE AUGUST 22, 2006.

2008FA0000169	CESSNA	THIELT	LINE	CRACKED
2/20/2008	172S	TAE1250299	057313K001301	FUEL SYSTEM

PILOT WAS FLYING AT 5,500 FEET WHEN THE ENGINE STARTED RUNNING ROUGH. WITHIN MOMENTS THE FADEC (A) LIGHT CAME ON THEN FADEC (B) ILLUMINATED. THE PILOT TRIED TO ACTIVATE THE MANUAL OVERRIDE BUT WAS UNABLE TO PUT OUT THE WARNING LIGHTS. THE RPMS DROPPED UNTIL ENGINE STOPPED, THEN THE PROP STOPPED. THE PILOT DID A GREAT JOB AND FOUND A SAFE ROAD TO LAND ON, AND COMMUNICATED WITH ATC THAT HE PLANNED TO MAKE AN EMERGENCY LANDING. WHEN THE PILOT LANDED HE ADVISED ATC THAT HE WAS SAFE AND DID NOT REQUIRE ANY SERVICES (FIRE, PARAMEDICS). ATC NOTIFIED THE LOCAL SHERIFF'S DEPARTMENT AND A DEPUTY WAS SENT OUT TO CONFIRM. THE PILOT MOVED THE AC FROM THE ROADWAY TO AVOID DAMAGE OR ANY INCIDENT WITH TRAFFIC. UPON REACHING THE AC OUR TECH PERFORMED A DOWNLOAD FROM THE FADEC. THE DOWNLOAD WAS SENT TO TAE FOR THEM TO REVIEW. THEY AGREED THERE WAS SOME SORT OF LOSS OF FUEL IN THE SYSTEM THAT CAUSED THE FUEL PRESSURE TO GO TOO LOW, THEN MADE THE ENGINE SPOOL DOWN. THE TECH UNCOWLED THE ENGINE TO LOOK AT THE HPP AND NOTICED A STRONG SMELL OF FUEL AROUND THE ENGINE. THEY PERFORMED A LEAK CHECK WITH THE ELECTRIC FUEL PUMP AND NOTICED THE FUEL SPRAYING OUT OF THE HARD FUEL LINE NEAR THE CONNECTION POINT WITH THE HPP. THEY THEN REMOVED THE FUEL LINE FROM THE PUMP AND FOUND THE CRACK JUST BELOW THE FLARE. MFG ADVISED THERE HAD BEEN NO OTHER INCIDENTS ON THIS FUEL LINE ON ENGINES BELOW 200 HOURS. THEY RECOMMENDED REMOVING THE FUEL LINE FROM ANOTHER ENGINE WE HAD THAT HAD NOT BEEN INSTALLED YET AND EXCHANGING THE LINE ON TO MOVE THE AC TO THE CLOSEST AIRPORT. WE DID SO ON 2/20 + MOVED THE AIRCRAFT TO AIRPORT. MFG SHIPPED THE PARTS TO US TO COMPLY WITH THE SB TM-TAE125-1005P1R1. WE RECEIVED THEM 2/25, FLEW OUR TECH TO AC, PERFORMED THE WORK, CONDUCTED A LEAK CHECK AND FOUND EVERYTHING TO BE SATISFACTORY. THE AIRCRAFT WAS FLOWN BACK WITHOUT FURTHER PROBLEM.

2008FA0000281	CESSNA	CONT	MOUNT	CRACKED
4/16/2008	175	GO300*	051313211	LT ENGINE

INSP FOUND UPPER LT BRACKET (0513132-11) WITH A SMALL CRACK ORIGINATING FROM THE LOWER EDGE OF THE ENGINE MOUNT BOLT WASHER. ONLY A SMALL BEND LINE WAS VISIBLE FROM THE COCKPIT SIDE OF THE BRACKET VIA BOROSCOPE. AFTER REMOVAL OF THIS BRACKET A CRACK WAS CLEARLY VISIBLE ON THE ENGINE SIDE OF BRACKET. FOUND UPPER RT BRACKET WITH (3) CRACKS SEPARATING THE BRACKET INTO 4 PIECES. THE THRESHOLD FOR THIS INSP SHOULD BE REDUCED FROM 2500 HRS. A MORE FREQUENT BOROSCOPE INSP WITHOUT REMOVAL OF THE ENGINE TRUSS MOUNT BOLTS WOULD PROVIDE AN EQUAL LEVEL OF SAFETY AS LONG AS A LARGER AREA WASHER HAS NOT BEEN INSTALLED. INSTALLATION OF A LARGER AREA WASHER MAY REDUCE THE STRESS POINT AND IMPROVE THE LIFE OF THE BRACKET.

WS9R031108001	CESSNA	CONT	CYLINDER HEAD	CRACKED
3/11/2008	180C	O470L		ENGINE

VISUAL INSPECTION OF THE CYLINDER AS IT WAS RECEIVED FROM THE MFG, REVEALED CRACKED FINS NEAR THE FUEL INJECTOR NOZZLE.

2008FA0000146	CESSNA	CONT	TORQUE LINK	CRACKED

1/29/2008	182G	O470*		07436051	ZONE 700

ON INSPECTION, A CRACK WAS IDENTIFIED IN THE FORGING FOR THE UPPER TORQUE LINK FOR THE NOSE LANDING GEAR. THE CRACK WAS ON BOTH SIDES OF THE BEAM SECTION ADJACENT TO THE EXTENSION STOP FOR THE GEAR.(AFT SIDE)

2008FA0000223	CESSNA	CONT		SKIN	CRACKED
3/8/2008	182M	O470*		052390133	TE FLAP

ON INSPECTION BOTH FLAPS RT AND LT TOP AND BOTTOM FLAP SKINS WERE CRACKED 6 TO 8 INCHES ALONG THE T/E, ON THE RIVET LINE. ALSO SHEERED RIVETS ON (3) OF THE (4) FLAP TRACK LOWER TRACK TO RIBS. RESKINNED FLAPS AND INSTALLED MS21042 STEEL SCREWS IN REPLACEMENT OF THE SHEERED RIVETS. PROBABLE CAUSE BY FLAP OVERSPEED WITH HIGH G, LOADS. THIS AIRCRAFT TOWS GLIDERS ALL THE TIME. (K)

2008FA0000231	CESSNA	CONT		LINE	LEAKING
3/31/2008	182P	O470*			GAS COLATOR

FUEL LEAKING FROM GAS COLATOR BOWL, TIGHTENED AT FACTORY DURING ACCEPTANCE FLIGHT (5.0 HOURS). FUEL LEAKING FROM GAS COLATOR INLET LINE (10 HOURS SINCE NEW) RESULTED IN OFF-AIRPORT LANDING DUE TO FUEL QUANTITY. (K)

2008FA0000256	CESSNA	CONT		PANEL	CORRODED
3/21/2008	182Q	O470*		17001277	CABIN

DURING AN AGING AC INSP OF FLEET AC, VEERING SEVERITY OF SURFACE CORROSION HAS BEEN FOUND IN AC CONTAINING SOUNDPROOFING PANELS SHOWN IN MFG IPC FIG 90. THE HEAVIEST AND MOST SEVERE CORROSION WAS FOUND UNDER SOUNDPROOFING PANELS PN 07000762-23 ITEM 7, PN 1700127-7 AND -10, ITEMS 10 AND 13, PN 1200217-8, ITEM 14 AND 1200193-11, ITEM 15. REMOVAL OF SURFACE CORROSION, CLEANING, BRIGHTING, AND ALODINING THE EFFECTED AREAS TO REMOVING OF COMPLETE SKIN PANELS TO RESTORE STRUCTURAL INTEGRITY OF THE AC. PROBABLE CAUSE IS THE MFG TO PROVIDE A SUITABLE CORROSION BARRIER TO PROTECT THE AC STRUCTURAL INTEGRITY AND THE SKIN PANELS BEING EXPOSED TO CHEMICAL ACTION OF THE ADHESIVES USED TO ATTACH THE SOUNDPROOFING PANELS TO THE SKIN PANELS ON THE FUSELAGE. RECOMMEND THAT A CLOSE INSPECTION BE MADE EACH ANNUAL INSPECTION FOR THIS PROBLEM. IF CORROSION IS DETECTED TO REMOVE THE SOUNDPROOFING PANELS FROM THE AC, REMOVE CORROSION, TREAT THE EFFECTED AREAS OR REPAIR AS REQUIRED. (K)

2008FA0000212	CESSNA	LYC	PREAIR	GASKET	UNKNOWN
3/19/2008	206H	IO540AC1A5		383493	FUEL SERVO

INSPECTED FUEL SERVO PLUG IAW SBPRS-107, REVISION 1, DATED MARCH 6, 2008. NO DAMAGE FOUND ON THE THREADS OF THE PLUG OR THE SERVO UNIT. INSTALLED PLUG AND SAFETIED IAW INSTRUCTIONS.

2008FA0000247	CESSNA	PWA	CLEVELAND	TUBE	TORN
1/31/2008	208B	PT6*		22X8007008	NOSE WHEEL

PILOT REPORTED NOSE TIRE FLAT. UPON DISASSEMBLY OF NOSE TIRE, FOUND MIDDLE SEAM ON OUTSIDE OF TUBE, TORN/SPLIT, APPROX 1 INCH IN LENGTH. (K)

2008FA0000257	CESSNA	PWA		ENGINE	MALFUNCTIONED
3/11/2008	208B	PT6A114A			

AS PILOT OF FLT 7575, LEVELED OFF AT 9000 FT, HEARD A LOUD POP NOISE COME FROM THE ENGINE AND NOTICED TRQ DROPPED BELOW 600 LBS AND ITT STARTED RISING. PILOT NEVER LOST POWER BUT DUE TO TEMP RISING HE DECLARED AN EMERGENCY AND LANDED SAFELY. AFTER TALKING TO PILOT AND CHECKING POWER ANALYZER AND RECORDER (PAR) THE ITT TEMP REACHED 926 DEGREES. ACCORDING TO MM, ANYTHING OVER 900 DEGREES IN CRUISE FLT REQUIRES TO BE PULLED AND SENT TO OVERHAUL SHOP FOR INSPECTION. WE HAVE BOROSCOPED THE ENGINE AND SEE NO EVIDENCE OF ANY FOD ACCORDING TO OUR CONTRACT MAINT. THERE IS SIGNS OF AN OVERTEMP. FIGURED THAT WITH WHAT THE PAR SHOWS. NOT SURE WHAT CAUSE THE LOUD POP AND THE OVER TEMP. MAYBE THE COMPRESSOR BLEED VALVE. MORE INFO AS RECEIVED.

2008FA0000248	CESSNA	CONT		THROTTLE SWITCH	INTERMITTENT

2/4/2008	210J	IO520*		COCKPIT

GEAR WARNING HORN WAS INOPERATIVE. AC LANDED WITH LANDING GEAR UP. SUBSEQUENT INVESTIGATION DETERMINED THROTTLE MICROSWITCH WAS MAKING INTERMITTENT CONTACT WHEN ENGAGED AND GROUND CONNECTION WAS INSUFFICIENT. CORRECTED BY REPLACING SWITCH AND REPAIRING GROUND CONNECTION. HORN OPERATION SHOULD BE CHECKED VIA TEST FEATURE DURING PREFLIGHT. (K)

2008FA0000222	CESSNA		DOWNLOCK SWITCH	BROKEN
11/16/2007	210L		513771	MLG

EXAMINATION OF THE LANDING GEAR SYSTEM REVEALED THAT THE LT LDG DOWN LIMIT SWITCH PLUNGER WAS DAMAGED AND STUCK IN THE DEPRESSED POSITION WITH APPROX .012 INCH AIRGAP BETWEEN PLUNGER TIP AND STRIKER PLATE. WITH SIMULATED AIR LOADS APPLIED TO THE LT MAIN GEAR THE LANDING GEAR PUMP WOULD SHUT OFF PRIOR TO THE LT MAIN GEAR LOCKING IN THE DOWN LOCK. THE GEAR POSITION INDICATOR IN THE COCKPIT INDICATED GREEN AND THE UNSAFE HORN DID NOT SOUND WHEN THE THROTTLE WAS RETARDED. (K)

2008FA0000260	CESSNA	CONT	CYLINDER	CRACKED
2/27/2008	402B	TSIO520E	712BCA	ENGINE

CRACKED BETWEEN FIN NR1-3, BEHIND INJECTOR. DEFECTIVE PRODUCT. (K)

2008FA0000199	CESSNA	CONT	CASE	CRACKED
3/18/2008	421C	GTSIO520L		RT ENGINE

REMOVED THIS ENGINE FROM THE RT POSITION FOR SHIPMENT BACK TO RAM AC DUE TO A DAMAGED CASE. DAMAGE APPEARS TO BE CAUSED BY A FAILED CONNECTING ROD THAT BROKE APART AND PUNCTURED (2) LARGE HOLES IN THE CRANKCASE. BRIEF ENGINE HISTORY: 347 HOURS PRIOR TO THE FAILURE THE ENGINE DEVELOPED AN OIL LEAK FROM A HAIRLINE CRACK IN THE RT CASE. THE ENGINE WAS SHIPPED TO RAM WHERE IT WAS DISASSEMBLED, CLEANED AND INSPECTED BEFORE GETTING REASSEMBLED USING A SERVICEABLE CRANKCASE, NEW CAMSHAFT, LIFTERS, MAIN AND ROD BEARINGS.

2008FA0000180	CESSNA		STUD	BROKEN
2/29/2008	501		65412045	LT MLG ACTUATOR

LT MLG ACTUATOR TO GEAR STUD BROKEN OFF AT BASE OF THE NUT ON THE TAPER SIDE, NUT AND WASHER SET MISSING AND STUD WAS NOT TIGHT IN THE GEAR.

AMCR200800001	CESSNA	WILINT	HEATING ELEMENT	FAILED
3/31/2008	525	FJ44	79646	RT ENGINE

PILOT REPORTED T2 HEATER FAIL ON RT ENGINE. FOUND T2 PROBE BAD.

B3OR20080079	CESSNA	PWA	ACTUATOR	OUT OF POSITION
3/18/2008	550	JT15D4	991206313	MLG

AIRCREW REPORTED LANDING GEAR WARNING HORN SOUNDED AND GEAR-IN-TRANSIT INDICATOR ILLUMINATED AS AIRCRAFT WAS BEING TOWED OVER A BUMP (HANGAR THRESHOLD). SCHEDULED FLIGHT WAS CANCELLED. MAINTENANCE CREW WAS ABLE TO DUPLICATE EVENT BY SLIGHT ACCELERATION OF TOW VEHICLE AND OBSERVED NOSE GEAR DOWN AND LOCKED INDICATOR ALSO EXTINGUISHED IN CONJUNCTION WITH THE OTHER REPORTED INDICATIONS. THE ACTUATOR DEFLECTION TEST IN THE AIRFRAME MM WAS ACCOMPLISHED TO DETERMINE THE SERVICEABILITY OF THE ACTUATOR'S INTERNAL DOWNLOCK MECHANISM WITH SATISFACTORY RESULTS. DOWNLOCK INDICATOR SWITCH ADJUSTMENT COULD NOT BE VERIFIED DUE TO AN ABSENCE OF REQUIRED TESTING EQUIPMENT. THE RECENTLY OVERHAULED ACTUATOR WAS REMOVED FOR RETURN TO OVERHAUL FACILITY FOR WARRANTY REPAIR/EXCHANGE.

FAA031008001	CESSNA	PWA	WIRE	ARCED
3/10/2008	550	JT15D4		COCKPIT

PILOT REPORTED CB LABELED LT CB PANEL OPENED IN FLIGHT, PILOT BLEW THE GEAR DOWN AND INITIATED A FLYBY OF THE TOWER TO ASSURE THE GEAR WAS DOWN. AC LANDED WITHOUT FURTHER INCIDENT. MAINT

INVESTIGATION REVEALED THAT THE CROSSOVER POWER WIRE FROM THE CO-PILOTS CB PANEL HAD RUBBED AND ARCED TO THE NUT AND COTTER KEY ATTACHING THE AILERON CABLE LINK FROM THE PILOTS CONTROL COLUMN TO THE OB LT FWD AILERON CABLE. THE WIRE WAS NOT PROPERLY ROUTED OR SECURED. THE WIRE LAYS UNDERNEATH THE AIR CONDITIONER DUCTING AND IS NOT VISIBLE WITH ONLY THE COCKPIT FLOORBOARDS REMOVED. THE WIRE SUPPLIES POWER FROM THE CO-PILOTS CB PANEL TO THE PILOTS CIRCUIT BREAKER PANEL BUSS THAT SUPPLIES POWER TO THE FOLLOWING BREAKERS ACM-2, W/S BLEED AIR, PITCH TRIM, SENS PWR, SPEED BRAKE, ENG. SYNC.

6001LENG	CESSNA	PWA	ATTACH ANGLE	CORRODED
3/27/2008	550	JT15D4	555415046810	ENGINE

ENGINE NACELLE ATTACHING FITTING ANGLE REMOVED FOR CORROSION. PARTS ARE CADMIUM PLATED, BUT NOT PAINTED. ALSO DISCOVERY IMPROPER DRILL HOLES AND RIVET SET DAMAGE AROUND SEVERAL HOLES.

01030413	CESSNA	BFGOODRICH	BRAKE ASSY	LOCKED
1/3/2008	560CESSNA		314901	MLG

UPON LANDING THE AIRCRAFT YAWED TO THE RIGHT AND IN OVERCOMPENSATING THE AIRCRAFT THEN STARTED A SIDEWAYS DRIFT ENOUGH THAT THE LEFT MAIN TIRE FAILED. IT WAS FOUND THAT ONE RIGHT HAND BRAKE STATOR WAS LOCKED AND HAD GROUND THE WHEEL FLAT AND THE LEFT MAIN FAILED AS A RESULT OF TIRE SIDEWALL FAILURE. DAMAGE INCLUDES BOTH TIRES AND WHEELS. LEFT LANDING LIGHT. LEFT HAND INBOARD FLAP AND RIGHT HAND BRAKE AND BRAKE LINES.

2008FA0000186	CESSNA	MOUNT BRACKET	CRACKED
3/6/2008	R172K	051351119	LT ENGINE

FOUND UPPER LT ENGINE MOUNT BRACKET CRACKED WHILE INSPECTING FOR CESSNA SEB07-2 REV 2. THIS SERVICE BULLETIN DOES NOT APPLY TO THIS SERIAL NUMBER, ALTHOUGH A CRACK WAS FOUND. RECOMMEND INCREASING THE SERIAL NUMBER RANGE OF AFFECTED AIRCRAFT. THIS SHOP HAS ALSO NOTED SEAPLANES HAVE A DIFFERENT LOWER MOUNT BRACKET THAN THAT WHICH IS CALLED OUT IN THE SERVICE BULLETIN. RECOMMEND INCLUDING THE PROPER SEAPLANE MOUNT BRACKET NUMBERS FOR AIRCRAFT SO EQUIPPED.

2008FA0000235	CESSNA	LYC	SCREW	IMPROPER PART
3/1/2008	R182	O540*	MS27039116	UNDER REAR SEAT

MFG SB NR SEB07-3 TO CHECK THE LENGTH OF THE SCREWS IN ACCESS PLATE UNDER REAR SEAT. THE PLATE MAY HAVE HAD TOO LONG A SCREW INSTALLED WHICH COULD CAUSE A FAILURE OF THE LANDING GEAR TO OPERATE DOWN. THE SB LISTED THE PROPER SCREWS TO USE IN EACH HOLE IN THE PLATE. THE SCREWS LISTED ARE THE ONES IN THE PARTS CATALOG. THOSE ARE THE SCREWS THAT ARE TOO LONG. IF ANYBODY PUT IN THE PROPER LENGTH SCREW, (MS27039-1-12), THEN THE AC WOULD BE LESS SAFE AFTER COMPLYING WITH THE SB. THE PLATE NEEDS 17 EA MS27039-1-12, AND 1 MS27039-1-09. (K)

2008FA0000252	CESSNA	LYC	MOUNT	FAILED
3/5/2008	T206H	TIO540AJ1A		STARTER

ORIGINAL STARTER (TT 433.4) WAS REMOVED BECAUSE IT FAILED (SMELLED BURNED). A REPLACEMENT WAS ORDERED FROM MFG AND INSTALLED. CHANGED THE SPARK PLUGS AND CHECKED ENGINE TIMING, WHICH WAS FOUND GOOD. AFTER INSTALLATION OF STARTER STARTED THE AC (5) TIMES AND OPS CHECKED GOOD. 2/29/2008 THE PILOT TRIED TO START THE ACFT AND HEARD A GROWLING SOUND. OPENED THE COWLINGS AND FOUND THE STARTER MOUNT CRACKED THROUGH THE BELL HOUSING. NOTIFIED MFG AND THEY ASSURED ME THIS WAS NORMAL WHEN AN AC HAS A KICKBACK. THE PILOT STATED HE DID NOT HAVE A KICKBACK. SENT THE STARTER FOR REPAIR AND WHEN RETURNED, INSTALL AND AGAIN CHECKED THE IGNITION SYS WITH NO ABNORMITIES FOUND. STARTED THE AC (5) TIMES AND HAD THE OWNER ON THE FOLLOWING DAY START (3) TIMES. AFTER THE 3RD START, THE PILOT DEPARTED FOR A LOCAL FLIGHT OF 1.2 HOURS AND LANDED FOR A QUICK BREAK. HE THEN TURNED THE KEY FOR A START AND NOTHING HAPPENED, BUT A GROWLING SOUND. MFG FLEW AN OVERHAULED STARTER. THE STARTER WAS FOUND CRACKED AT THE BASE AND AROUND THE BELL HOUSING. OBSERVATION NOTED: THE ORIGINAL STARTER REMOVED HAS A THICKER BASE MOUNT FACE, WHICH IS SOLID, AND THE BELL HOUSING IS ALSO THICKER. THE NEW REPLACEMENT THAT CRACKED TWICE WITHIN 1.2 HOURS HAS A HOLLOWED OUT BASE MOUNT FACE AND THINNER MATERIAL AROUND THE BELL HSG. THE THICKER BASE HAS AN (H) STAMPED ON IT AND THE THINNER BASE HAS AN (HT) ON IT. THE STARTER THAT WAS BROUGHT OUT TO US ALSO HAD A SOLID BASE WITH AN (H) STAMPED ON IT. TOLD BY MFG THAT THE

THINNER CASTING IS A DYE-CAST TO SAVE WEIGHT, AND THE OLDER, THICKER STYLE WAS A SAND CASTING PROCESS AND IS NO LONGER IN PRODUCTION. BEFORE INSTALLING THE LAST STARTER, CHECKED THE P-LEAD ON THE RT MAG AND THE SWITCH WITH NO ABNORMITIES FOUND. ALSO CONTACTED AC MFG PRODUCT SUPPORT AND FOUND THAT THEY HAVE HAD (5) INCIDENTS OF THE MOUNT CRACKING ON THE NEWER MODEL WITH SEVERAL FAILING WITH NO ABNORMITIES FOUND ON THE AC. (K)

ACOR032508001	CESSNA	LYC	PREAIR	PLUG	LOOSE
3/25/2008	T206H	TIO540AJ1A	RSA10ED1	383493	FUEL SERVO

FUEL SERVO REGULATOR HEX PLUG LOOSE ON NON AFFECTED SERVO RSA-10 S/N 70259806. DATA REFERENCED AD 2008-06-51 E, SB 08-73-01, AND PRECISION SB PRS-107. SERVO HAS NOT BEEN NEW, REBUILT, OVERHAULED, OR REPAIRED ON OR SINCE AUGUST 22, 2006

2008FA0000215	CESSNA	LYC	NUT	LOOSE
2/4/2008	T206H	TIO540AJ1A		FUEL SERVO

WHILE PERFORMING SB PRS-107, FOUND PN 383493 HEX NUT ACCESS PLUG FINGER LOOSE. ALSO, FOUND RED DYE INSIDE FUEL SERVO AIR CHAMBER. THIS AC HAS HAD AN ISSUE WITH LEAN IDLE MIXTURE IN THE PAST. NOTE: HEX NUT WILL BE LOOSER IF ENGINE IS WARMED UP. SUSPECT UNDERTORQUED FROM FACTORY AND RED DYE NOT FLUSHED FROM CHAMBER. SENT TO OVERHAUL FACILITY TO HAVE CORRECTED AND PERFORMED THE REQUIREMENTS OF PRS-107 SB. (K)

2008FA0000084	CESSNA	CONT	LINE	CHAFED
2/21/2008	T210M	TSIO520*	1285094	HYDRAULIC SYS

REPLACED HYDRAULIC TUBE 128509-4 DUE TO CHAFING FROM LONG SCREW IN WRONG LOCATION OF INSPECTION COVER PLATE. THIS WAS FOUND BY INSPECTION AS DESCRIBED IN MFG SEB07-03 AND WHICH HAVE A SUPERSEDED PN AVAILABLE TO NULLIFY THE POTENTIAL PROBLEM. THIS SERIES AND OTHER MODELS SHOULD BE ADDED TO SERVICE BULLETIN APPLICABILITY.

2008FA0000238	CIRRUS	CONT	BUSHING	INCORRECT
2/27/2008	SR20	IO360*	51815001	REDUCER

STATIC SYSTEM FAILED LEAK CHECK DURING 2 YEAR STATIC SYS IFR CERTIFICATION, LEAKS WERE CAUSED BY REDUCED BUSHING FAILING TO SEAL STATIC LINE SUMP. (ON BOTH SIDES, PILOT AND COPILOT). TO REPAIR THE LEAKAGE, PIPE THREAD TAPE (TEFLON TAPE) WAS USED ON THE REDUCER BUSHING BEFORE MATING IT WITH THE STATIC LINE SUMP. THE TYPE OF THREAD ON THESE ITEMS SHOULD NOT REQUIRE TEFFLON TAPE TO SEAL. SB 2X-34-22R1 (REVISED 10 OCT 2006) STEP L (FOR KIT 701164-001) STATES (APPLY THREAD SEALANT TO ALL MALE PIPE THREAD FITTINGS PRIOR TO STATIC LINE SUMP ARE NOT PIPE THREAD, AND THEREFOR WERE NOT (TAPED). RECOMMEND CHANGING PROCEDURE TO STATE (APPLY THREAD SEALANT TO ALL MALE FITTINGS PRIOR TO ASSY). (K)

2008FA0000206	COLUMB	CONT	TURBOCHARGER	CRACKED
3/19/2008	LC40550FG300	TSIO550C	654327E	RIGHT

RT TURBO TRANSITION PIPE CRACKED. THIS IS THE THIRD ONE INTO OUR SHOP.

2008FA0000194	COLUMB	CONT	PIPE	CRACKED
3/19/2008	LC40550FG300	TSIO550C		TURBOCHARGER

RT TURBO TRANSITION PIPE CRACKED. THIS IS THE THIRD ONE INTO OUR SHOP.

2008FA0000254	DIAMON	CONT	SERVO	DAMAGED
3/5/2008	DA40	IO360*		FUEL INJECTION

WHILE PERFORMING A 100 HR INSP, THE TECH DISCOVERED FINE METAL PARTICLES COVERING THE THROAT AND VALVE OF THE FUEL INJECTION SERVO (2576568-1, SN 70B10709). THE SERVO WAS SENT TO A REPAIR FACILITY TO DETERMINE WHETHER OR NOT ANY OF THE METAL PARTICLES ENTERED THE SERVOS BLAST TUBES. IT HAS BEEN DETERMINED THAT THE METAL ORIGINATED FROM THE CHAFING OF THE LOOSE FITTING INLET RING (ITEM 220) WITHIN THE FLANGE (ITEM 20). THE LOOSE FIT IS DUE TO MFG. MFG HAS NOT COME UP WITH A FIX AS OF THIS DATE. FOR NOW WE ARE CEMENTING THE INLET RING TO THE FLANGE WHILE AWAITING A

PERMANENT FIX.

2008FA0000278	DIAMON	CONT	VALVE	LOOSE
4/15/2008	DA40	IO360*		

THE ALTERNATE AIR VALVE IS VIBRATING AND CAUSING FRETTING BETWEEN THE INLET RING, PN D41-7166-20-31 AND FLANGE, PN D41-7166-20-33. THE "DUST" IS BEING INGESTED INTO THE FUEL CONTROL SERVO AND ENGINE. THERE NEEDS TO BE A TIGHTER FIT BETWEEN THESE PARTS.

2008FA0000241	DIAMON	THIELT	ENGINE	POWER LOSS
4/9/2008	DA42	TAE1250299		LEFT

AFTER TAKEOFF AND PULLING LANDING GEAR UP, LT ENGINE POWER REDUCTION TO 75 PERCENT FOR ABOUT ONE MINUTE AND POWER WAS RESTORED. THIS SAME ISSUE HAS BEEN INDUCTED TWICE IN LESS THAN 24 HRS. THERE IS NO FEDAC WARNINGS SHOWN ON SYS. A REPORT HAS BEEN SENT TO MFG.

2008FA0000149	DIAMON	THIELT	CONNECTOR	ARCED
2/27/2008	DA42	TAE1250299		FUEL RAIL

CONNECTOR IS NOT MAKING GOOD CONTACT AND CAUSING ARCING. PROBABLE CAUSE IS AUTOMOTIVE QUALITY AND NOT OF THE THREADED TYPE. TO PREVENT OCCURRENCE RECOMMEND USING AVIATION THREADED TYPE PLUG. (K)

YZ4R200800001	DOUG	PWA	EXTINGUISHER	INOPERATIVE
2/22/2008	DC3CR183090C	PT6*	3260007	

FIRE EXTINGUISHER DID NOT ACTIVATE. THE FIRE EXTINGUISHER IS FILLED WITH 4.5 POUNDS OF HALON 1301 AND PRESSURIZED TO 600 PSIG WITH DRY NITROGEN. THE CONTENTS ARE HELD IN THE CYLINDER BY A PLUG VALVE, PN 13038 WITH AN O-RING SEAL. THIS PLUG VALVE IS COMPRESSED BY THE HOUSING ASSY, PN 33370004. THE HOUSING ASSY IS THREADED INTO THE STEM, PN 31840000. THE DISCHARGE OUTLET IS BETWEEN THE HOUSING ASSY AND STEM. THE OUTLET ASSY SWIVELS ABOUT THE STEM AND HOUSING ASSY FOR ALIGNMENT AT TIME OF INSTALLATION IN AN AIRCRAFT. WHEN THE FIRE EXTINGUISHER IS FILLED, THE PLUG VALVE AND HOUSING ASSY ARE IN COMPRESSION. THE HOUSING ASSY IS MFG WITH VARIOUS MACHINED GROOVES AND IS DESIGNED FOR THE COMPRESSIVE FORCES. WHEN THE CARTRIDGE PN13083-5 IS FIRED, IT CREATES LATERAL FORCES, WHICH CAUSE THE HOUSING ASSY END TO DETACH. THIS ALLOWS THE PLUG VALVE TO BLOW OUT OF THE CONTAINER DUE TO THE PRESSURE INSIDE THE FIRE EXTINGUISHER. THIS RESULTS IN THE AGENT FOLLOWING THE PLUMBING AND EXTINGUISHING THE FIRE. THE MALFUNCTION OR DEFECT WAS CREATED WHEN THE PLUG VALVE PN 13038 FAILED TO DISLODGE FROM THE CYLINDER. THE FIRE EXTINGUISHING AGENT DID NOT RELEASE. THIS CREATES ADDITIONAL HAZARDS TO PERSONNEL HANDLING THE CHARGED FIRE EXTINGUISHER. THE PLUG VALVE COULD COME DISLODGED DUE TO VIBRATION OR SHOCK CAUSING THE EXTINGUISHING AGENT TO EXPEL FROM THE CYLINDER WITH SIGNIFICANT FORCE.

2008FA0000232	DOUG	PWA	CARTRIDGE	FAILED
3/31/2008	DC3CR183090C	PT6*	130835	FIRE BOTTLE

THE FIRE BOTTLE WAS BEING DISCHARGED FOR AN OVERHAUL. THE CARTRIDGE FIRED BUT DID NOT DISCHARGE THE BOTTLE. SUSPECT IMPROPER SETUP OF CARTRIDGE IN BOTTLE. (K)

CO1Y200800003	DOUG		HINGE BRACKET	WORN
1/14/2008	MD11		ARC44231	LT SPOILER

LT SPOILER NR1 FOUND WITH PLAY.

CO1Y200800002	DOUG		STRUCTURE	CORRODED
3/27/2008	MD11F			ZONE 400

AT HORIZONTAL STABILIZER CTR SECTION, FOUND CORROSION INSIDE BARREL NUT HOLE NR 36 LT HORIZ STAB.

Y5CR200700003	DOUG		SPRAG CLUTCH	BROKEN
1/22/2008	MD500E		369D25351	MAIN ROTOR

DURING A 300HR. INSPECTION ON THE O/R CLUTH THE CUSTOMER FOUND A BROKEN SPRAG CLIP ON THE

SPRAG ASSY.

2008FA0000230	ECLIPS		CONTROL TUBE	OUT OF ADJUST
3/31/2008	ECLIPSEEA500			PITCH TRIM

AC EXPERIENCED A PITCH TRIM MALFUNCTION ON TAKEOFF ACCOMPANIED BY A WARNING MESSAGE. AN EMERGENCY WAS DECLARED AND THE AC WAS RETURNED TO BASE. PROBLEM WAS DUPLICATED ON THE GROUND. AFTER TROUBLESHOOTING, IT WAS DETERMINED THAT A REPLACEMENT ACTUATOR SHOULD BE INSTALLED. AFTER INSTALLING NEW PART, DEFECT STILL EXISTED. FURTHER TROUBLESHOOTING REVEALED THAT THE CONTROL TUBES CONNECTED THE ACTUATOR TO THE CONTROL SURFACE WERE NOT SIMILARLY ADJUSTED. THIS CONDITION CAUSED A BINDING OF THE SYS MECHANICS AND THE SUBSEQUENT FAILURE. WHEN THE CONTROL TUBES WERE SIMILARLY ADJUSTED, THE SYSTEM OPERATED CORRECTLY ON GROUND AND IN SUBSEQUENT OPERATIONAL CHECK FLIGHT. (K)

WL7R040208001	EMB		HOUSING	MISINSTALLED
4/2/2008	EMB135KL			LIFE RAFT

THE CONFIGURATION BETWEEN THE FIRING HEAD BELL HSG AND THE LINK VALVE ARE NOT LOCATED PROPERLY. THIS CAUSES THE LENGTH OF THE FREE LANYARD TO THE LINK VALVE TO BE REDUCED. THIS MAY CAUSE THE LIFE RAFT TO NOT DEPLOY IN THE SECONDARY METHOD FOR INFLATION VERSUS ACTIVATING THE PRIMARY INFLATION METHOD, THE RIPCORD HANDLE.

STS004	EMB		LIFE RAFT	MISINSTALLED
4/2/2008	EMB135KL		1218FASA6311701	

THE CONFIGURATION BETWEEN THE FIRING HEAD BELL HOUSING AND THE LINK VALVE ARE NOT LOCATED PROPERLY. THE CAUSES THE LENGTH OF THE FREE LANYARD TO THE LINK VALVE TO BE REDUCED. THIS MAY CAUSE THE LIFE RAFT TO NOT DEPLOY IN THE SECONDARY METHOD FOR INFLATION VERSUS ACTIVATING THE PRIMARY INFLATION METHOD, THE RIPCORD HANDLE.

2008FA0000164	GULSTM	LYC	MAGNETO	WORN
1/10/2008	500S	IO540E1B5	6393	ENGINE

ENGINE WAS GETTING HARD TO START, CHECKED MAG TIMING AND FOUND LT MAG TIMING OUT OF LIMITS, DISASSEMBLED MAG AND FOUND THE CAM WORN OUT . 100.3 HRS SINCE NEW

2008FA0000167	GULSTM	LYC	MAGNETO	WORN
2/26/2008	500S	IO540E1B5	6393	ENGINE

ENGINE WAS GETTING HARD TO START, CHECKED MAG TIMING AND FOUND LT MAG TIMING OUT OF LIMITS, DISASSEMBLED MAG AND FOUND THE CAM WORN OUT . 81.1 HRS SINCE NEW.

2008FA0000208	GULSTM	RROYCE	SHUTOFF VALVE	SEIZED
3/28/2008	GIV	TAY6108	1159SCH2393	HYD SYSTEM

WHILE AT CRUISE ALTITUDE, THE COMBINE HYDRAULIC SHUTOFF VALVE FAILED TOWARD CLOSED POSITION WHICH IS INDICATED IN THE COCKPIT ON THE EICAS WITH DASHED LINES (VALVE IN TRANSITION) THUS TAKING AWAY YOUR HYDRAULIC PRESSURE INDICATION. WHEN THE VALVE IS FULLY CLOSED THE INDICATION ON THE EICAS IS DIAGONAL SOLID LINES. THE ONLY WAY TO GET THIS VALVE TO MOVE CLOSED IS WITH THE FIRE L HANDLE.

2008FA0000226	GULSTM	RROYCE	SIGHT GLASS	CRACKED
3/21/2008	GIVXG450	TAY6118	1159SCH5197	HYD SYSTEM

SIGHT GLASS CRACKED IN SEVERAL LOCATIONS AND LEAKS HYDRAULIC FLUID, THIS TANK IS ONE OF SEVERAL RETURNED FOR THE SAME DEFECT. (K)

2008FA0000224	GULSTM	RROYCE	SIGHT GLASS	CRACKED
3/21/2008	GVSPG550	BR700710A110	1159SCH5197	HYD TANK

SIGHT GLASS CRACKED IN SEVERAL LOCATIONS AND LEAKS HYDRAULIC FLUID. THIS TANK IS ONE OF SEVERAL RETURNED FOR THE SAME DEFECT. (K)

2008FA0000239	HUGHES		NUT	SPLIT
1/15/2008	369E		MHS54896	TAIL ROTOR BLADE

ON FINAL TORQUE OF TAIL ROTOR BLADES RETENTION BOLT, NEW NUT SPLIT PRIOR TO ACHIEVING TORQUE. NEW NUT, IS THINNER AND LIGHTER STRENGTH THAN PREVIOUSLY MFG OLDER PN. NEW BOLTS ALSO REQURIE A NEW HIGHT TORQUE VALUE. (K)

2008FA0000211	LANCAR	CONT	DUCT	CRACKED
3/12/2008	LC41550FG	TSIO550A	654327E	ENGINE

RT TURBO TRANSITION DUCT CRACKED. (NOTE: THIS IS THE SECOND TIME WE HAVE SEEN THIS)

2008FA0000225	LANCAR	CONT	TRANSITION DUCT	CRACKED
4/1/2008	LC41550FG	TSIO550C	654327	TURBOCHARGER

DURING ANNUAL INSP FOUND TURBO TRANSITION PART OF EXHAUST CRACKED ALL THE WAY THRU FRONT RADIUS OF THE PIPE. (K)

2008FA0000269	LANCAR	CONT	TRANSITION DUCT	CRACKED
4/1/2008	LC41550FG	TSIO550C	654327	TURBOCHARGER

DURING ANNUAL INSPECTION FOUND TURBO TRANSITION PART OF EXHAUST CRACKED ALL THE WAY THRU FRONT RADIUS OF THE PIPE. (K)

2008FA0000157	LEAR		YAW DAMPER	FAULTY
1/8/2008	24		238006679	ZONE 300

THIS PART FAILED TO OPERATE DURING FIRST FLIGHT AFTER INSTALLATION AT CRUISE.

2008FA0000214	LEAR	GARRTT	DEFOG SYSTEM	BURNED
2/7/2008	35A	TFE731*	FED2000	COCKPIT

RIGHT AFTER TAKEOFF, AUX DE-FOG UNIT ON CO-PILOT SIDE BURNED AND SMOKE FROM BLOWER FAILURE. NO WIRE PROBLEMS OR CIRCUIT BREAKER ISSUES FOUND. UNIT FAILURE CAUSED SMOKE IN COCKPIT, CREW DECLARED EMERGENCY AND RETURNED TO AIRPORT WITHOUT FURTHER INCIDENT.

2008FA0000188	LEAR	PWA	ACTUATOR	BYPASSING
3/10/2008	45LEAR	JT12A8	2000300003	LT MLG

LT MLG ACTUATOR BYPASSING ON RETRACTION CAUSING INTERFERENCE WITH IB DOOR ROLLERS. NO EXTERNAL FAILURE INDICATION. UPON TEARDOWN, IT WAS DISCOVERED THAT THE CYLINDER WAS SCRATCHED AND THE PISTON SEAL WAS DAMAGED.

2008FA0000234	MAULE	CONT	VALVE	BROKEN
3/7/2008	M4210C	IO360*		ALT AIR VALVE

THE ENG AUTOMATIC ALTERNATE INDUCTION AIR VALVE THAT IS PARTIALLY LOCATED INSIDE THE CYLINDRICAL PAPER INDUCTION AIR FILTER CAME APART AND SOME OF ITS PART (2 INCH LONG, .2500 INCH DIAMETER BOLT. 2 INCH LONG SPIRAL SPRING WASHER, AND COTTER PIN) WERE INGESTED INTO THE ENGINE INTAKE MANIFOLD, ENG CYL VALVES AND THE ENG CYL. THIS CAUSED A MAJOR LOSS OF POWER AFTER TAKEOFF, THE PILOT WAS ABLE TO GET BACK TO THE RUNWAY, BUT HE GROUND LOOPED THE AIRPLANE CAUSING AN ACCIDENT DUE TO SUBSTANTIAL DAMAGES TO THE AIRPLANE. POST ACCIDENT INVESTIGATION FOUND THAT AT AN EARLIER DATE THE PREVIOUS OWNER HAD DISASSEMBLED THE ALTERNATE AIR VALVE TO PAINT IT AND HE MAY HAVE IMPROPERLY REINSTALLED THE COTTER PIN INTO THE CASTELLATED NUT AND DRILLED BOLT THAT HOLDS THE ENTIRE ALTERNATE AIR VALVE TOGETHER. ALSO DURING THE INVESTIGATION IT WAS FOUND THAT DURING THE LAST 42 HOURS OF AIRPLANE OPERATION THERE WERE 2 ANNUAL INSP PERFORMED, BUT NEITHER INSPECTOR REMOVED THE CYLINDRICAL PAPER AIR FILTER TO COMPLETELY INSPECT THE ALTERNATE AIR VALVE. THEY ONLY TAKE IT OUT AT THE 500 HR AD NOTE INTERVAL. (K)

2008FA0000191	MAULE	LYC	PREAIR	FLOAT	BENT
3/31/2008	M7235C	O540B4B5	MA45	30802	CARBURETOR

CARBURETOR FLOAT PN 30-802 PLASTIC FLOAT, THE CARBURETOR HAD A HIGH FLOAT LEVEL TWICE AFTER SETTING THE FLOAT TO SPEC IAW MM. THE FLOAT WAS REMOVED DUE TO THE FLOAT LEVER TANG WAS BENDING UNDER NORMAL USE CONTACTING THE NEEDLE VALVE AND RESULTING IN A HIGH FLOAT LEVEL AND ROUGH RUNNING ENGINE. IT WAS NOTICED THAT THE FLOAT LEVER TANG ON THE PLASTIC FLOAT PN 30-802 MADE OF STAINLESS STEEL IS ABOUT .5 THE THICKNESS THAT OF THE BRASS FLOAT PN 30-764 WHICH HAS HAD NO PROBLEMS WITH THE LEVER TANG BENDING IN NORMAL USE. A PN 30-764 FLOAT WAS INSTALLED AND ENGINE WAS NORMAL, NO ROUGHNESS NOTED. PLEASE LOOK IN TO THIS PROBLEM SO AS NO ONE HAS A ROUGH AND RICH RUNNING ENGINE DUE TO THIS PROBLEM AND POSSIBLE EARLIER THAT NORMAL CARBURETOR ICING DUE TO EXCESS FUEL.

2008FA0000219	MOONEY	LYC	SELECTOR VALVE	SEIZED
2/5/2008	M20C	O360*		FUEL SYSTEM

FUEL SELECTOR VALVE SEIZED IN THE (OFF) POSITION DURING A ROUTINE FUEL TANK SWITCHOVER. FAILURE CAUSED BY CORROSION ON SELECTOR VALVE SHAFT WHERE IT PASSES THROUGH THE UPPER VALVE HOUSING. POOR DESIGN. NO PROVISION MADE TO PREVENT SPILLED LIQUIDS OR MOISTURE FROM CARPET FROM ENTERING UPPER HOUSING VALVE SHAFT BORE. (K)

2008FA0000233	MOONEY	LYC	CYLINDER	WORN
3/18/2008	M20E	IO360A1A	IO360AV	ENGINE

PILOT REPORTED PARTIAL POWER LOSS ON TAKEOFF. ENG INSP REVEALED THE FOLLOWING DISCREPANCIES AND CORRECTIONS AS NOTE: CYL NR 1 HAD BAD INTAKE VALVE SEAT WITH EXCESSIVE WEAR, AND FUEL INJECTOR AIR SCREEN CONTAMINATED. THIS POSSIBLY CAUSED CYL TO BURN LEAN AND CAUSED EXCESSIVE WEARING ON VALVE SEAT. THIS IN TURN WOULDN’T ALLOW THE INTAKE VALVE TO CLOSE PROPERLY, CRATING ROUGH ENG RUNNING AND OCCASIONAL BACK-FIRING. COMPLETE STUD ASSY WAS REPLACED WITH REBUILT ASSY SN 162, UNDER WO 032608AA. CYL NR 4 HAD EXCESSIVE ROCKER ARM SIDE CLEARANCE. ROCKER ARM SIDE CLEARANCE WAS RESHIMMED AS SERVICE INSTRUCTIONS IN SB NR 225B BY ADDING ADDITIONAL SHIMS TO BRING ROCKER ARM SIDE.

2008FA0000203	MOONEY	LYC	STARTER	FAILED
3/20/2008	M20F	IO360A1A	14912LS	ENGINE

THIS STARTER WAS PURCHASED NEW FROM A LOCAL VENDOR. THE STARTER FAILED TO OPERATE AFTER LESS THAN A YEAR AND LESS THAN 100 HOURS OF SERVICE. THE OWNER\OPERATOR WANTED TO HAVE THE OLDER, HEAVIER STARTER INSTALLED HOWEVER NONE WERE AVAILABLE, AFTER CONTACTING SEVERAL PARTS VENDORS. THE OPERATOR OPTED TO HAVE THE STARTER REPAIRED BY THE MFG. THE REPAIRED STARTER WAS INSTALLED BUT FAILED AGAIN SEVEN MONTHS AND 62.3 OPERATING HOURS LATER. A SERVICABLE STARTER WAS LOCATED AND INSTALLED IAW ENGINE SERVICE INSTRUCTION 1154L DATED JANARY 27, 2006. OUR SHOP RECOMMENDED THIS CHANGE DUE TO A TREND WE ARE SEEING IN THE LIGHT WEIGHT STARTERS. WE HAVE SEEN AT LEAST 6 FAILURES OR THE STARTER DRIVE GEAR EITHER FAILING TO ENGAGE THE STARTER RING GEAR, OR WORSE, FAILURE TO RETRACT AFTER ENGINE START. THE RETRACT FAILURE ON SEVERAL OCCASIONS HAS DESTROYED BOTH THE STARTER AND THE RING GEAR. THIS FAILURE IS COSTING IN EXCESS OF $1500.00 TO REPAIR. STARTER DRIVE FAILURE IN THE OLDER PRESTOLITE STARTERS USUALLY REQUIRE ONLY A NEW STARTER DRIVE AND NO DAMAGE TO THE EXPENSIVE RING GEAR.

HN8R200800001	MOONEY	LYC	CONTROL CABLE	BROKEN
1/22/2008	M20J	IO360A1A	6602263	PROP GOVERNOR

PROPELLER GOVERNOR CONTROL CABLE BROKE WHILE AIRCRAFT WAS ON GROUND.

SJ3R025859	PILATS	PWA	FORK	CRACKED
3/14/2008	PC12	PT6A67D	D495	PROPELLER ASSY

CRACK INDICATIONS FOUND DURING MAG PARTICLE INSPECTION. CRACKS ARE LOCATED ON THE THIN SIDE OF ALL (4) FORK SLOTS RADI.

2008FA0000236	PILATS	PWA	PIN	MISMANUFACTURED
2/27/2008	PC1245	PT6A67B	5322012039	NLG STRUT

DURING NOSE STRUT RESEALING, TORQUE LINKS WERE REMOVED. BEFORE REASSEMBLY THE PINS WERE

CHECKED TO VERIFY GREASE WOULD PASS THROUGH. GREASE WOULD PASS THROUGH THE LOWER BUT NOT THE UPPER (UPPER AND LOWER PINS THAT CONNECT THE TORQUE LINKS TO THE GEAR ARE THE SAME PN). AFTER CLEANING, FOUND THAT THE UPPER PIN COUNTER BORE ONLY WENT PART WAY THROUGH THE PIN. (K)

2008FA0000209	PIPER	LYC	SLICK	BREAKER POINTS	WORN
4/1/2008	PA23250	IO540C4B5	6393	M11522	MAGNETO

ENGINE BECAME INCREASINGLY DIFFICULT TO START, CHECKED IGNITION TIMING AND FOUND LT MAGNETO OUT OF TOLERANCE. INSPECTED LT MAGNETO, POINTS FAILED TO OPEN DUE TO EXCESSIVLY WORN BREAKER POINT CAM. 87 HOURS SINCE NEW

2008FA0000197	PIPER	LYC	CYLINDER	SEPARATED
3/21/2008	PA23250	IO540C4B5		NR 3

NR 3 CYLINDER SEPARATED FROM ENGINE CASE.

WS9R031908001	PIPER	LYC	RETAINER	BROKEN
3/19/2008	PA28*	O360A4M	AEL14995	CYLINDER

DISCOVERED THAT ALL (4) OF THE PUSH ROD TUBE RETAINERS WERE BROKE UPON REMOVING THE ROCKER BOX COVERS. THIS ENGINE HAD JUST BEEN OVERHAULED AND HAS TEST CELL TIME ONLY.

2008FA0000187	PIPER	LYC	SOLENOID	SHORTED
4/2/2008	PA28161	O320*	767391	STARTER

DURING PRE-FLIGHT WHEN MASTER SWITCH WAS TURNED ON, THE PROP BEGAN TO ROTATE UNCOMMANDED. TROUBLESHOT TO FUSED STARTER SOLENOID. THIS IS THE SECOND SOLENOID FAILURE OF THIS TYPE IN ONE WEEK TIME, SAME MODEL AIRCRAFT. REPLACED WITH NEW PART, OPS CHECKED GOOD.

2008FA0000160	PIPER	LYC	TUBE	CUT
2/25/2008	PA28161	O320*	0923150	LT TIRE

UPON LANDING, LT MAIN TIRE DEFLATED UPON DISASSEMBLY TUBE WAS FOUND TO HAVE A SMALL SLIT IN THE OUTSIDE OF THE CIRCUMFERENCE OF THE TUBE. THIS SLIT HAS BEEN FOUND ON NUMEROUS TUBE FAILURES FOUND BY THIS REPAIR STATION. DISCUSSION WITH TUBE MFG HAVE BEEN FRUITLESS AS THEY FEEL IT IS A FOLD INDUCED DURING INFLATION BUT THEIR INSTALLATION PROCEDURES HAVE BEEN FOLLOWED TO THE LETTER AND PROBLEM STILL EXIST DURING EXTREME TEMP CHANGES EXPERIENCED IN OUR CLIMATE (NORTH DAKOTA).

2008FA0000161	PIPER	LYC	TUBE	CUT
2/25/2008	PA28161	O320*	0923150	LT TIRE

UPON LANDING, LT MAIN TIRE DEFLATED. UPON DISASSEMBLY, TUBE WAS FOUND TO HAVE A SMALL SLIT IN THE OUTSIDE OF THE CIRCUMFERENCE OF THE TUBE. THIS SLIT HAS BEEN FOUND ON NUMEROUS TUBE FAILURES FOUND BY THIS REPAIR STATION. DISCUSSION WITH TUBE MFG HAVE BEEN FRUITLESS AS THEY FEEL IT IS A FOLD INDUCED DURING INFLATION BUT THEIR INSTALLATION PROCEDURES HAVE BEEN FOLLOWED TO THE LETTER AND PROBLEM STILL EXIST DURING EXTREME TEMP CHANGES EXPERIENCED IN OUR CLIMATE (NORTH DAKOTA).

2008FA0000173	PIPER	LYC	TUBE	FLAT
2/28/2008	PA28161	O320*	0923080	TIRE

ON LANDING, RT MAIN LANDING GEAR TIRE FLAT. UPON DISASSEMBLY FOUND A SMALL SLIT IN THE OUTSIDE CIRCUMFERENCE OF THE TUBE. HAVE FOUND MANY SIMILAR SLITS IN OTHER FAILED TUBES FROM MFG.

2008FA0000168	PIPER	LYC	TUBE	FAILED
2/26/2008	PA28161	O320*	0923080	TIRE

NOSE TIRE FOUND FLAT IN HANGER. DISASSEMBLE FOUND SMALL SLIT IN OUTSIDE CIRCUMFERENCE OF TUBE TYPICAL OF OTHER FLAT TIRES FROM SAME MFG. SAMPLE FAILED TUBES HAVE BEEN RETURNED TO MFG FOR EVALUATION.

2008FA0000210	PIPER	LYC		SOLENOID	STICKS
3/25/2008	PA28161	O320*		701122223	STARTER

WHEN BATTERY MASTER TURNED ON PROP BEGAN ROTATING UNCOMMANDED. TROUBLESHOT TO FUSED STATER SOLENOID. REPLACED SOLENOID WITH NEW OEM PART PROBLEM PERSISTED. NEW SOLENOID WAS STRUCK WITH A SIDE BLOW AND CONTACTS FREED. REPLACED WITH ANOTHER NEW OEM PART, PROBLEM CORRECTED.

2008FA0000229	PIPER	LYC		SOLENOID	STICKS
4/8/2008	PA28161	O320*		701122223	STARTER

AFTER START, STARTER ANNUNCIATOR DID NOT EXTINGUISH. ENGINE SHUTDOWN WITH MIXTURE BUT CONTINUED TO CRANK OVER WITH MASTER TURNED ON. TROUBLESHOOTING REVEALED STARTER CONTACTOR STUCK CLOSED. WHEN STRUCK CONTACTS WOULD OPEN BUT WHEN POWER APPLIED WOULD STICK CLOSED UNTIL STRUCK.

2008FA0000190	PIPER	LYC	PREAIR	NUT	LOOSE
3/13/2008	PA28R201	IO360A1A			FUEL SERVO

AD 2008-06-51 IS NOT APPLICABLE DUE TO THE ENGINE AND FUEL SERVO WERE OVERHAULED BY MFG ON MARCH 03, 2006 (OUTSIDE THE DATE RANGE OF THIS AD). HOWEVER, WE DECIDED TO CHECK ALL OF OUR AIRCRAFT AND DURING THIS INSPECTION FOUND THE HEX NUT WAS LOOSE ON THIS PARTICULAR SERVO.

2008FA0000195	PIPER	LYC		FUEL CONTROL	LOOSE
2/29/2008	PA28R201	IO360C1C6		25244509	ENGINE

RAN ENGINE AFTER INSPECTION AND FOUND FUEL FLOW AT TO POWER SETTING TO BE QUITE LOW. INVESTIGATED AND FOUND PLUG LOOSE ON SIDE OF INJECTION SERVO. CONTACTED ENGINE SHOP FOR FIX.

2008FA0000243	PIPER	CONT		TURBOCHARGER	FOD
4/10/2008	PA28R201T	TSIO360FB			ENGINE

TURBOCHARGER COMPRESSOR DAMAGED BY FOD INGESTED THROUGH THE ALTERNATE AIR DOOR. THIS DOOR IS ON TOP OF THE AIR FILTER BOX ALLOWING ANY OBJECT THROWN UP BY THE NOSE WHEEL TO ENTER THE INDUCTION SYSTEM WHEN THE DOOR IS ACTIVATED DURING PREFLIGHT CHECKS.

2008FA0000246	PIPER	LYC		CYLINDER	DAMAGED
4/11/2008	PA31325	TIO540*			NR 5

NR 5 CYL EXHAUST VALVE BROKEN, SENDING THE HEAD OF THE VALVE THROUGH THE EXHAUST AND LODGING ITSELF INTO THE TURBOCHARGER, EXTENSIVE DAMAGE TO THE CYLINDER, PISTON, AND TURBO.

2008FA0000263	PIPER	LYC		CYLINDER	CRACKED
4/3/2008	PA32301	IO540K1G5		LW12993	NR 2

NR 2 CYL CRACKED FROM UPPER SPARK PLUG HOLE TO THE EXHAUST VALVE SEAT. CRACK IN HEAD LED TO FAILURE OF EXHAUST PUSHROD HOUSING, AND DEFORMATION OF THE EXHAUST PUSHROD. AC LANDED WITHOUT INCIDENT. (K)

2008FA0000192	PIPER	LYC		LINK ASSY	SHEARED
2/18/2008	PA34200	IO360A1A		9582900	NLG

ACFT EXPERIENCED A NLG COLLAPSE UPON LANDING. INSPECTION OF ACFT, NLG DOWNLOCK LINK ASSY FOUND SHEARED NEAR ATTACHMENT TO DOWNLOCK ASSY BODY. IT IS NOT KNOW WHAT CAUSED THIS LINK ASSY TO SHEAR. DETERMINED THAT NOT ALL THE REQUIREMENTS OF AD 2005-13-16 WERE ACCOMPLISHED DURING THE LAST ANNUAL, AND IT IS POSSIBLE THIS COULD HAVE BEEN A CONTRIBUTING FACTOR. NUMEROUS COMPONENTS OF THE NLG REQUIRE MX ACTIONS & REPETITIVE INSPECTIONS. FRACTURE MODE OF SHEARED ASSY COULDN`T DETERMINE IF PART FAILED INSTANTANTLY OR PROGRESSIVELY, SIGNATURE SUGGESTS A FATIGUE FRACTURE MAY HAVE BEEN PRESENT. AD2005-13-16 ADDRESSES CONCERNS THAT HAVE RESULTED FROM SDR`S RELATED TO THE COLLAPSE OR INVOLUNTARY RETRACTION OF THE NLG ON THE AC. THIS AD CONTAINS THE REQUIREMENTS FOR THE INSP OF THE NLG AND COMPONENTS, CONTAINS NEW PROCEDURES

FOR RIGGING THE NOSE GEAR INSTALLATION, AND REQUIRES THE REPLACEMENT OF UNSERVICEABLE PARTS.

2008FA0000251	PIPER	CONT	FITTING	SEPARATED
11/14/2007	PA34200T	TSIO360*	95555000	NLG MOUNT

SB 1123B TABLE 1, ITEM 14 STATES TO INSPECT TUNNEL BRACKET 95554-000 AND FITTING 95555-000 FOR CONDITION AND ATTACHMENT. ACCORDING TO FIGURE 1A, THE CONDITION INDICATED NO PROBLEMS, HOWEVER FITTING 95555-000 WAS SEPARATED FROM BRACKET 95554-000. ALL 4 AN426 RIVETS HAD SHEARED, ALLOWING FITTING TO SHIFT POSITIONS, ALLOWING NOSE GEAR OVERCENTER GEOMETRY TO CHANGE, RESULTING IN GEAR COLLAPSE. ITEM 14 DESCRIBES INSPECTION THROUGH AND ACCESS OPENING IN BOTTOM SKIN AT BL 0.0 JUST AFT OF STATION 49.5. IT IS UNCLEAR WHETHER THIS ACCESS OPENING IS TO BE CUT IN THE SKIN AND A DOUBLER AND INSPECTION PLATE INSTALLED OR IF THIS HOLE IS ALREADY PRESENT. NO PA-34 AC IN OUR FLEET HAS THIS OPENING. THIS DEFECT WAS NOTED AFTER WE CUT THIS OPENING. ITEM 95555-000 CAN NOT BE INSPECTED WITHOUT THIS ACCESS OPENING. IT IS DIFFICULT, IF NOT IMPOSSIBLE TO SEE THIS FITTING FROM ANY ANGLE INSIDE THE AC COCKPIT. (K)

2008FA0000227	PIPER	LYC	TUBE	WORN
2/25/2008	PA44180	O360*	86262003	MLG

NOSE GEAR DOOR TUBE PN 86262003 FOUND WITH GROOVE WORN INTO TUBE AT APPROX 65 PERCENT OF TUBE THICKNESS IN THE AREA OF THE LT AND RT SUPPORTS PN 86262-005 AND 86262-012 RESPECTIVELY. THIS TUBE CONNECTS TO THE LT AND RT NOSE GEAR DOOR RODS AND PIVOTS AS THE GEAR IS RAISED AND LOWERED AND IT IS AT THE PIVOT POINT OF THE TUBE WHERE THIS WEAR IS OCCURRING. CURRENTLY THERE IS A NYLON BUSHING PN 452647 THAT IS INSERTED AT THIS PIVOT POINT TO PROVIDE FOR SOME PROTECTION OF THE TUBE. THERE IS HOWEVER, NO WEAR TO THIS NYLON BUSHING. IT CAN BE ASSUMED THAT THIS NYLON BUSHING IS THE CAUSE OF THE WEAR AND PROVIDES NO GUARD AGAINST PROTECTING THE INTEGRITY OF THE TUBE. CURRENTLY THERE IS NO REQUIREMENT FOR LUBRICATION AT THIS PIVOT POINT. FAILURE OF THIS TUBE ASSY COULD RESULT INTO INADEQUATE GEAR MOVEMENT. RECOMMENDATIONS WOULD BE TO PROVIDE FOR SOME TYPE OF BEARING BLOCK WITH LUBRICATION POINTS. (K)

FAA08222001	RAYTHN	GARRTT	SEAT	MISINSTALLED
2/22/2008	HAWKER800XP	TFE731*	3037091BS	

DURING PRE-FLIGHT INSPECTION IT WAS NOTED THAT NR2 RT SEATBACK WOULD NOT BREAK OVER AND FOLD FWD IAW PLACARD TO REMOVE ESCAPE HATCH. THIS CONDITION PREVENTS ESCAPE HATCH FROM BEING EASILY REMOVED. FURTHER INVESTIGATION REVEALED THAT THE NR2 RT SEAT HAD BEEN SWAPPED WITH THE NR1 LT SEAT. SEATS ARE A DIFFERENT PN. THIS APPARENTLY HAPPENED AT LAST MAJOR MAINT, QUITE SOME TIME AGO. SEATS ARE A DIFFERENT PN, BUT WE COULD NOT FIND IN WRITING THAT SPECIFIED THIS INFORMATION NOR IS THERE A REQUIRED INSP TO CHECK FOR THIS CONDITION. TALKS WITH MFG TECH INDICATE THAT THIS CONDITION IS FOUND FROM TIME TO TIME. ACCOMPLISH AN IMMEDIATE INSP TO VERIFY THAT THE CORRECT PN SEAT IS IN THE NR2 RT POSITION AND CORRECT ANY DISCREPANCY. INSTALL A SMALL PLACARD ON THE SEAT SKIRT FACING THE AISLE THAT READS TO THE EFFECT "THIS SEAT REQUIRED TO BE INSTALLED IN THE NR 2 RT POSITION".

2008FA0000265	RAYTHN	GARRTT	COMPRESSOR	SEPARATED
3/22/2008	HAWKER900XP	TFE731*	307241616	ENGINE

ON CLIMB THROUGH FL140 CREW HEARD BANG FROM RT ENGINE WITH VIBRATION. RT ITT INCREASED 150C BUT NO OVER TEMP. REDUCED POWER, THEN BROUGHT POWER BACK UP, WITH SAME RESULT. CREW LANDED WITHOUT INCIDENT AND ENGINE REMOVED AND SENT FOR REPAIR AND OVERHAUL. (K)

2008FA0000221	SCWZER	ALLSN	SCROLL	CRACKED
2/20/2008	269D	250C20	269D45031	OIL COOLER FAN

UPON INSPECTION OF OIL COOLER FAN ASSY, FOUND MANY CRACKS AROUND THE TOP MOUNT OF SCROLL ASSY. (K)

MV1R200808061	SKRSKY	ALLSN	ALLSN	SHAFT	CRACKED
4/2/2008	S76	250C30S		6898785	NR1 PTO GEAR

OIL LEAK FROM OUTPUT SHAFT NR 1 ENGINE. INSPECTED AREA NO DEFECTS FOUND AT THAT TIME. REPLACED

SHAFT SEAL. GROUND OPS AND LEAK CHECK GOOD. AFTER FLIGHT OIL LEAK RETURNED. ON GROUND RUN NO LEAK UNTIL ROTOR WAS RELEASED. OIL LEAK WAS AT OUTPUT SHAFT. FOUND PTO OUTPUT SHAFT CRACKED. REMOVED ENGINE SENT TO ENGINE SHOP FOR INSPECTION AND REPAIR.

2008FA0000237	SKRSKY	PWA	SPAR	CRACKED
2/21/2008	S76B	PT6*	7610105017045	T/R BLADE

DURING A ROUTINE INSP A SLIGHT, OCCASIONAL CLICK WAS HEARD WHILE FLEXING TAIL ROTOR BLADE. BLADE ASSY PN 761005501042, SN A245-00153 WAS REMOVED FOR PRECAUTIONARY MEASURES SENT FOR INSPECTION/ EVALUATION. UPON DISASSEMBLY AND INSPECTION SPAR WAS FOUND TO HAVE CRACKS COMING FROM ELLIPTICAL PLUG AREA. SPAR WAS SUBSEQUENTLY CHANGED, BLADE INSPECTED AND RETURNED TO SERVICEABLE CONDITION. SCRAPED SPAR.

B3OR2008046	SNIAS	SERVO CONTROL	LEAKING
2/13/2008	AS350B2	704A44831141	LT HYD SYSTEM

ON A ROUTINE PREFLIGHT INSPECTION, THE LT HYDRAULIC ROLL CONTROL SERVO WAS DISCOVERED TO BE LEAKING HYDRAULIC FLUID AT THE PISTON SHAFT SEAL. THE LEAK COULD NOT BE DUPLICATED DURING GROUND TESTING WITH A HYDRAULIC POWER CART IAW THE MM INSTRUCTIONS. SUBSEQUENT FLIGHT TESTING REVEALED THE LEAK PERSISTING WITH A LEAK RATE SUSPECTED TO BE SLIGHTLY OUT OF LIMITS. OF PARTICULAR NOTE: THE LEAK COULD ONLY BE DUPLICATED WHILE ACTUAL FLIGHT LOADS WERE INDUCED. ASIDE FROM THE LEAK, THE HYDRAULIC SERVO WAS REPORTED TO BE FUNCTIONING NORMALLY. UNIT WAS REPLACED.

B3OR2008030	SNIAS	TMECA	FCU	LEAKING
1/25/2008	AS350B2	ARRIEL1D1	0164548240	ENGINE

FUEL CONTROL UNIT IS LEAKING FUEL FROM A DIAPHRAM BREATHER HOLE IN THE CASING. THE LEAKING HOLE IS LOCATED BELOW AND SLIGHTLY IB OF THE PRESSURE REDUCING VALVE ATTACHED TO THE FCU. FUEL LEAK WAS INITIALLY OBSERVED AS A SEEP, PROGRESSING TO A LOW PRESSURE STEADY TRICKLE THROUGHOUT MULTIPLE ENGINE RUNS. ALL OTHER FUEL CONTROL FUNCTIONS WERE OPERATING NORMALLY.

2008FA0000250	SWRNGN	GARRTT	ENGINE	OVERHEATED
3/5/2008	SA227AC	TPE33110UG		

IN CRUISE TO 8000 FT, INDICATION OF RED LIGHT OF OIL PRESSURE WITH 870 DEGREE TEMPERATURE. LIGHT TURNS OFF. AFTER 15 SECONDS, THE LIGHT TURNS ON AGAIN WITH 870 DEGREE TEMPERATURE, BUT THE PRESSURE DOWN NEAR ZERO. THE CREW MADE THE SHUTDOWN ENGINE PROCEDURE. LANDING WITHOUT NOVELTY. AT THE MOMENT THE ENGINE IS WAITING TECH INSPECTOR. (K)

2008FA0000179	UNIVAR	CONT	RIB	CORRODED
2/29/2008	415E	C85*		RT WING

COMPLIANCE WITH AD 2002-26-02 DETECT AND CORRECT CORROSION IN WING CENTER SECTION. FOUND 5 RIVETS CORRODED OFF THE LOWER CENTER RIB ON THE RT WING WALKWAY BOX.

END OF REPORTS