U.S. Department of Transportation
Federal Aviation Administration

AFS-600
Regulatory Support Division

ADVISORY CIRCULAR

43-16A

AVIATION MAINTENANCE ALERTS

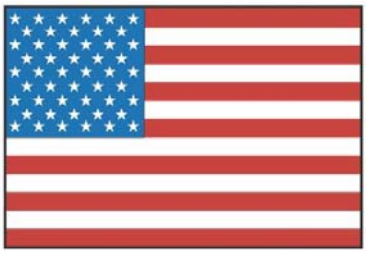

ALERT NUMBER 386

SEPTEMBER 2010

CONTENTS

AIRPLANES

DIAMOND 1
LEARJET 6
PIPER 8

POWERPLANTS

CONTINENTAL 8
PRATT & WHITNEY 10

ACCESSORIES

BENDIX MAGNETO 13
GARMIN AUTOPILOT 17

AIR NOTES

INTERNET SERVICE DIFFICULTY REPORTING (iSDR) WEB SITE 18
IF YOU WANT TO CONTACT US 19
AVIATION SERVICE DIFFICULTY REPORTS 19

U.S. DEPARTMENT OF TRANSPORTATION
FEDERAL AVIATION ADMINISTRATION
WASHINGTON, DC 20590

AVIATION MAINTENANCE ALERTS

The Aviation Maintenance Alerts provides the aviation community with an economical means to exchange service experiences and to assist the FAA in improving aeronautical product durability, reliability, and safety. We prepare this publication from information operators and maintenance personnel who maintain civil aeronautical products pertaining to significant events or items of interest. At the time we prepared this document, we have not fully evaluated the material. As we identify additional facts such as cause and corrective action, we may publish additional data in subsequent issues of the Alerts. This procedure gives Alerts' readers prompt notice of conditions reported to the FAA Service Difficulty Reporting System (SDRS). We welcome your participation, comments, and suggestions for improvement. Send to: FAA; ATTN: Aviation Data Systems Branch (AFS-620); P.O. Box 25082; Oklahoma City, OK 73125-5029.

(Editor's notes are provided for editorial clarification and enhancement within an article. They will always be recognized as italicized words bordered by parentheses.)

AIRPLANES

Diamond: DA20-C1; Cracked Nose Gear Fork; ATA 3222

A repair station submitter says, "The nose landing gear fork cracked on both left and right sides." (Nose Landing Gear Fork P/N: 20-3220-08-00. The SDRS database records at least five such discrepancy reports.)

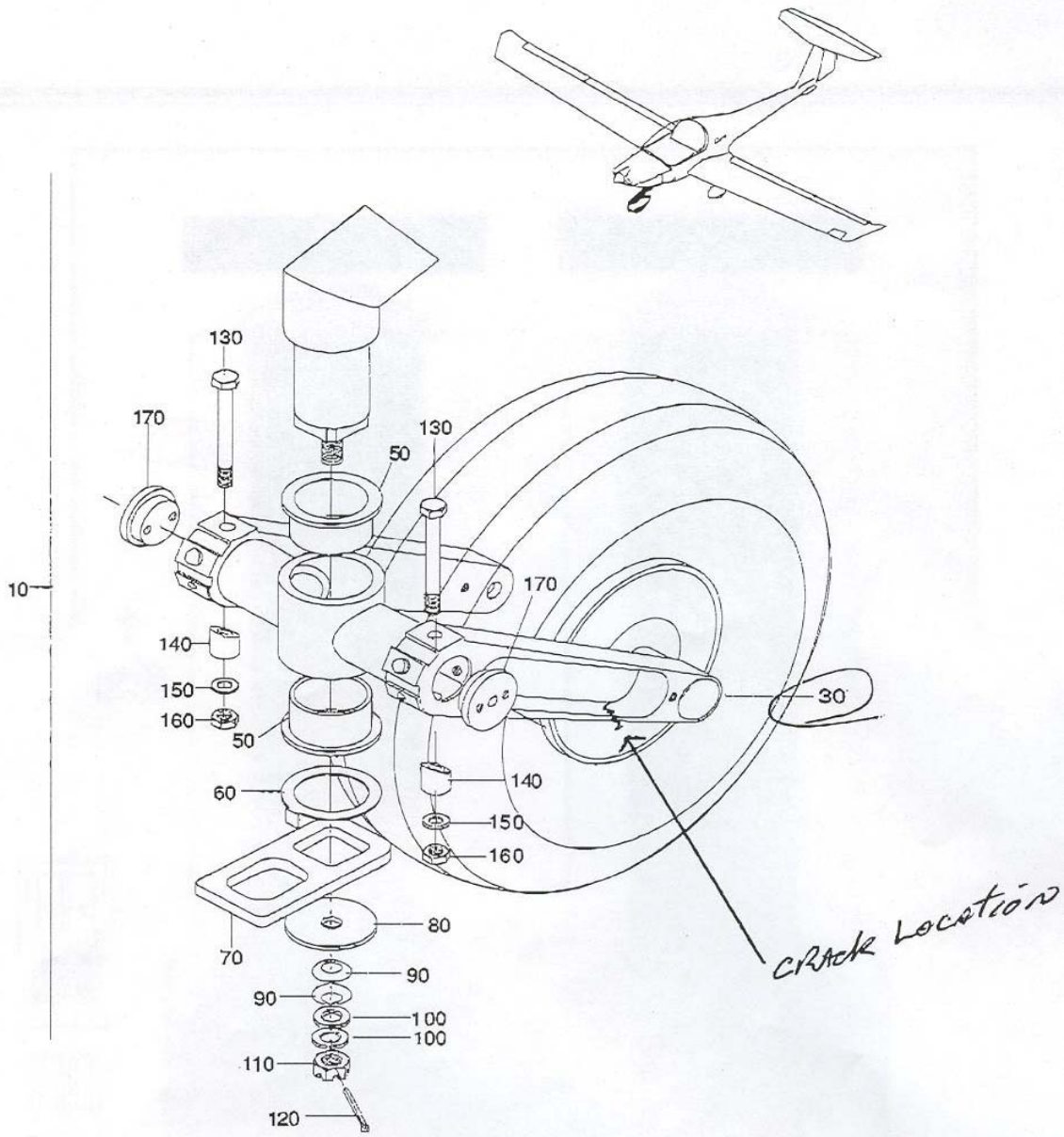

Fig 01
Page 2
02 Aug. 05

32-20

Doc # DA203-C1
Rev 1

Part Total Time: 1,926.7 hours

Diamond: DA20-C1; Cracked Nose Gear Fork; ATA 3222

(The same submitter from the last report files two additional reports on this second DA20, but at two different times and dates, as noted. Both submissions state the same discrepancy.)

First Report: April 2009. "The nose landing gear fork cracked on both the left and right arms."
(P/N 20-3220-08-00.)

Part Total Time: 1,306.0 hours

Second Report: August 2010. *(Same P/N as above.)*

Part Total Time: 573.6 hours

Learjet: 60; Chart-holder Binding Aileron Controls; ATA 2510

"During completion of the takeoff climb," says the submitter, "the PIC *(pilot in command)* reported there was trouble moving the aileron to the starboard position. The aircraft made an uneventful landing. *(After inspection)* it was found that the extension arms on the chart holder attached to the co-pilot's yoke were extended forward, and *(these)* became caught in the yoke cover, increasing the turning resistance of the aileron. The extensions were retracted and subsequent tests of the aileron movement revealed no further discrepancies.."

(Chart holder P/N: 106201.)

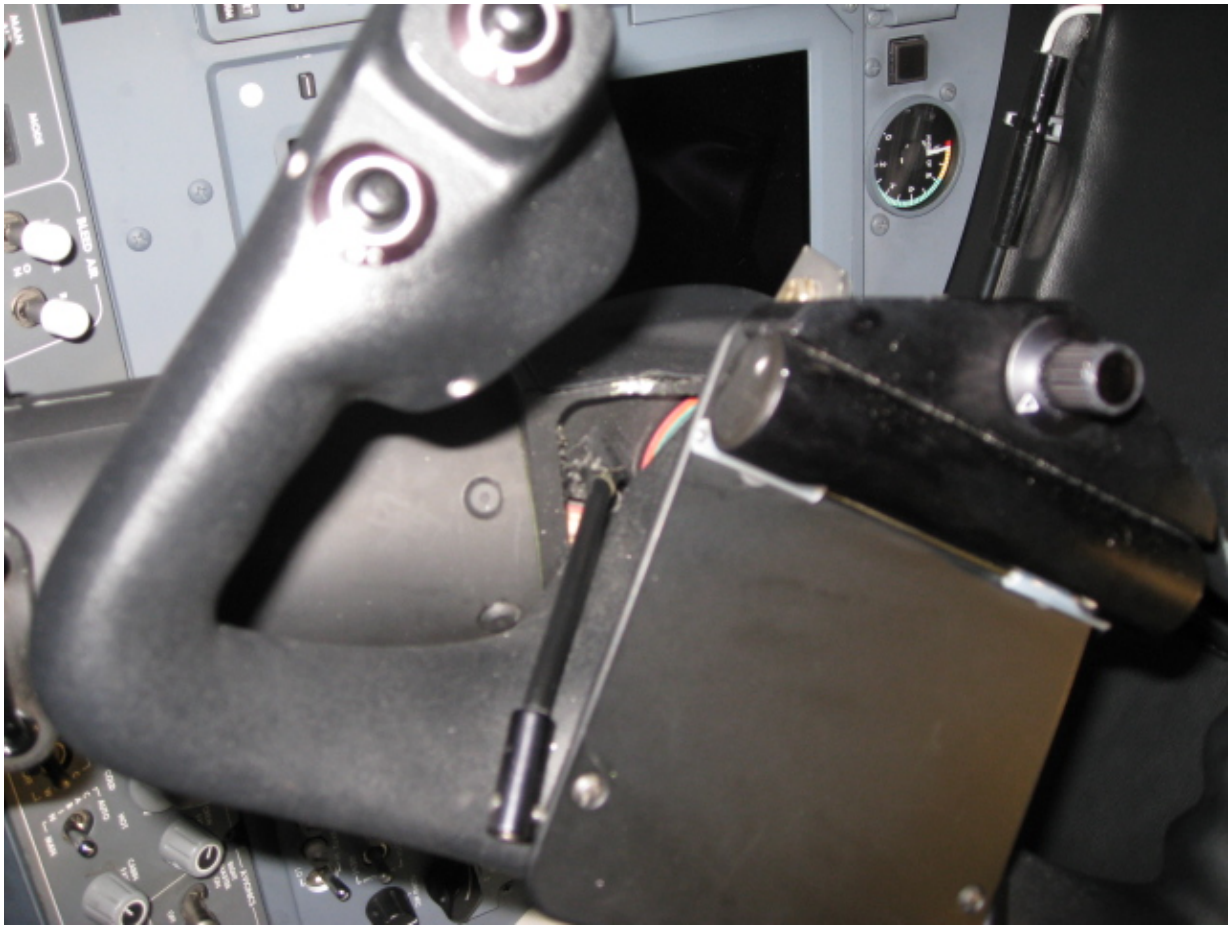

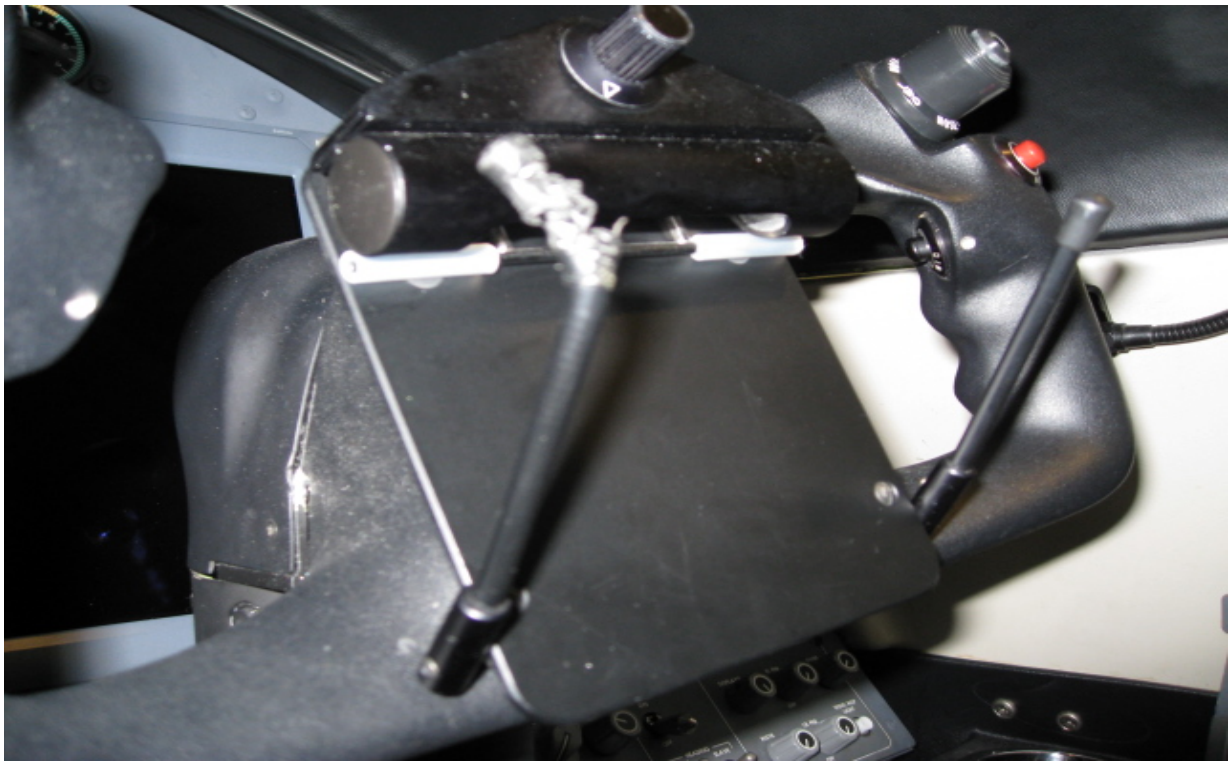

Part Total Time: 1,728.0 hours

Piper: PA46-350P; Loose Landing Light Power Supply; ATA 3340

"During landing," states a mechanic, "the operator could not reduce power of the aircraft—it landed without incident. An investigation revealed the aircraft had been modified IAW STC SA02279AT with an aftermarket, high intensity landing light. The power supply for *(this)* light was mounted on the forward engine firewall above and behind the FCU (fuel control unit). *(It)* was secured to the firewall with adhesive IAW the STC. The adhesive mounting failed; the power supply fell from the firewall and became lodged in the FCU linkage, preventing power reduction and full engine control. This high intensity power supply *(P/N LSM500200128)* was relocated to the engine mount and secured to an aluminum plate."

Part Total Time: (unknown)

POWERPLANTS

Continental: IO470K; Improper fuel fittings; ATA 7324

A technician states, "*(We performed...)* the fuel injection setup per TCM SID 97-3E, but the electronic fuel flow computer showed flow below specifications. We were unable to increase flow sufficiently by increasing pressure. *(Subsequent inspection revealed the...)* inlet elbow fittings (P/N's 631658 and 628437) had been previously reversed, probably twelve years prior during installation of an electronic fuel flow transducer. Part 631658 has a restrictor orifice, while 628437 does not. The parts look identical externally. It takes a very careful *(observation)* to see the internal difference. The TCM engine overhaul manual does not mention this. The TCM parts manual shows the different part numbers, but does not describe the differences. This would be a very easy mistake to make, and very difficult to diagnose later. *(Again)*, this problem probably started twelve years ago, and was not detected or corrected until now. This airplane had five cylinders changes during this time—*(most likely)* caused by lean operation at full power. The aircraft *(may not have...)* generated full power on takeoff due to a very lean, full rich mixture. It is critical to communicate this to mechanics and owners to prevent a dangerous condition."

(What a great tip! Thank-you—Ed.)

Part Total Time: (unknown)

Continental: GTISO520H; Cracked Propeller Shaft; ATA 8510

"The *(Cessna 421)* pilot had a rough running engine," states a technician, "and difficulty controlling the engine RPM's. *(He)* shut down and feathered the right engine, landing safely at *(the airport)*. Maintenance performed repair *(work)* on the propeller control cable, and proceeded to perform an engine run. However, the engine would not develop enough RPM to un-feather the propeller. The mechanic boarded the aircraft to observe the gauges—at which time the propeller separated from the engine. It has been determined by metallurgical *(analysis)* that the propeller shaft failed by fatigue cracks from an initiating crack, followed by fracture. The fatigue cracks grew over some period of time." *(Propeller shaft P/N: 633908)*.

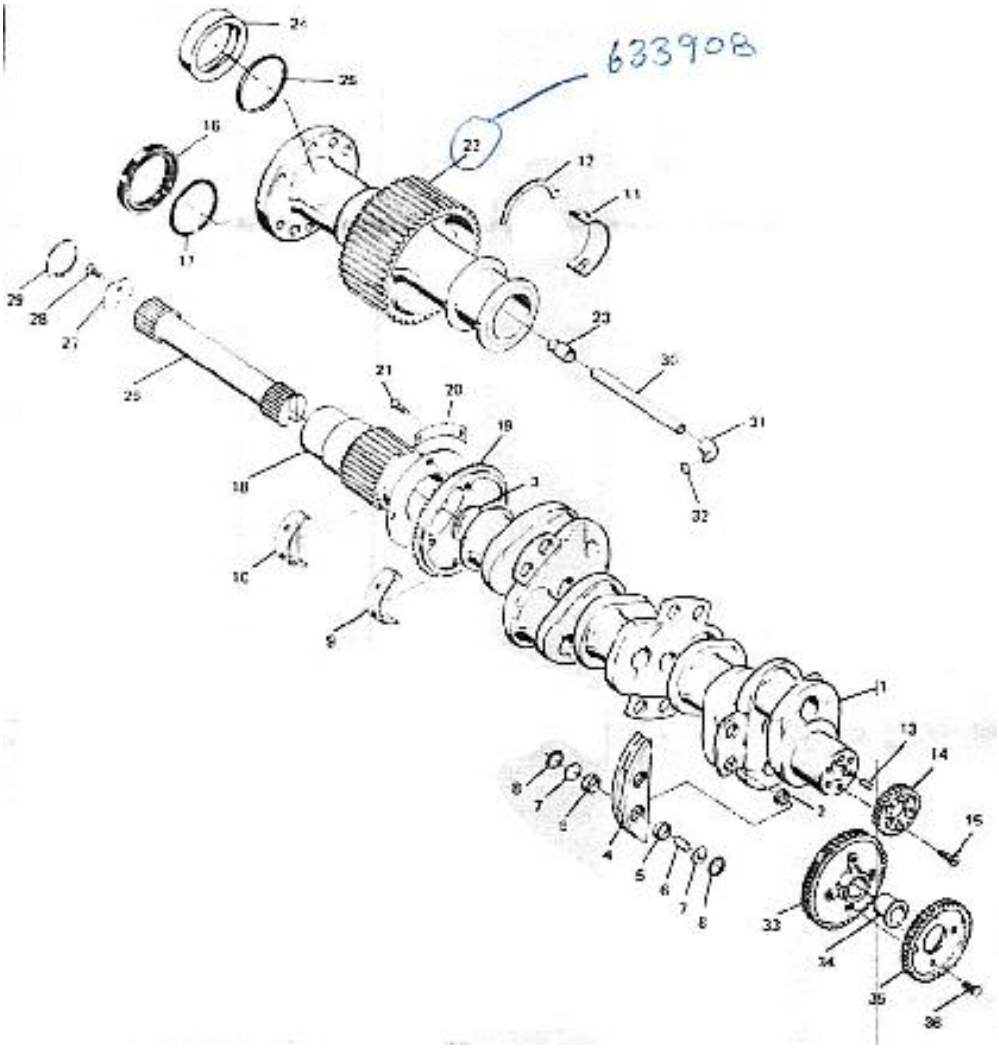
633908

Part Total Time: 1,349.0 hours (time since overhaul)

Pratt & Whitney: PW306A; Failed Turbine Blade; ATA 7250

A technician says, "About 45 minutes into the flight and climbing through flight level 360, the crew heard a loud 'bang' and felt vibration. The ITT *(internal turbine temperature)* began an immediate climb, followed by the 'FIRE' light and smoke in the cabin. The crew brought the throttle to idle, shut down the engine via the fuel cutoff switch, declared an emergency, and was vectored by ATC to the nearest suitable airport."

Part Total Time: 3,195 hours

ACCESSORIES

Bendix Magneto: S6RN1225; Failed Bearing; ATA 7414

(The following report not only includes careful photo compositions, but also contact information for interested readers having similar concerns. The magneto in question bolts to a Continental IO550C—it connected to a Beechcraft 58. A hearty "thank-you" goes to Ray for his frequent and detailed submissions!)

Chief Inspector Raymond Benischeck from Quest Diagnostics Flight Operations states, "During a preflight run-up, the left engine was observed to only produce about 2000 RPM. Inspection of the left magneto revealed the bronze bearing had become loose in the distributor block, allowing the distributor gear electrode to strike and damage several of the distributor block electrodes. This is the third instance of a Bendix 1200 series magneto to fail in this condition—around 1300 hours. These magnetos have been inspected in accordance with the 500 hour requirements of the TCM 1200 series maintenance manual at the required intervals. All these failures have occurred within a six week time frame. TCM has been contacted and they are aware of two other, similar failures. They are performing analytical inspections on the returned units." *(Component number: BL3493504; the Part Number 10391586 reflects eight times in the SDRS database—all for loose bearings!)*

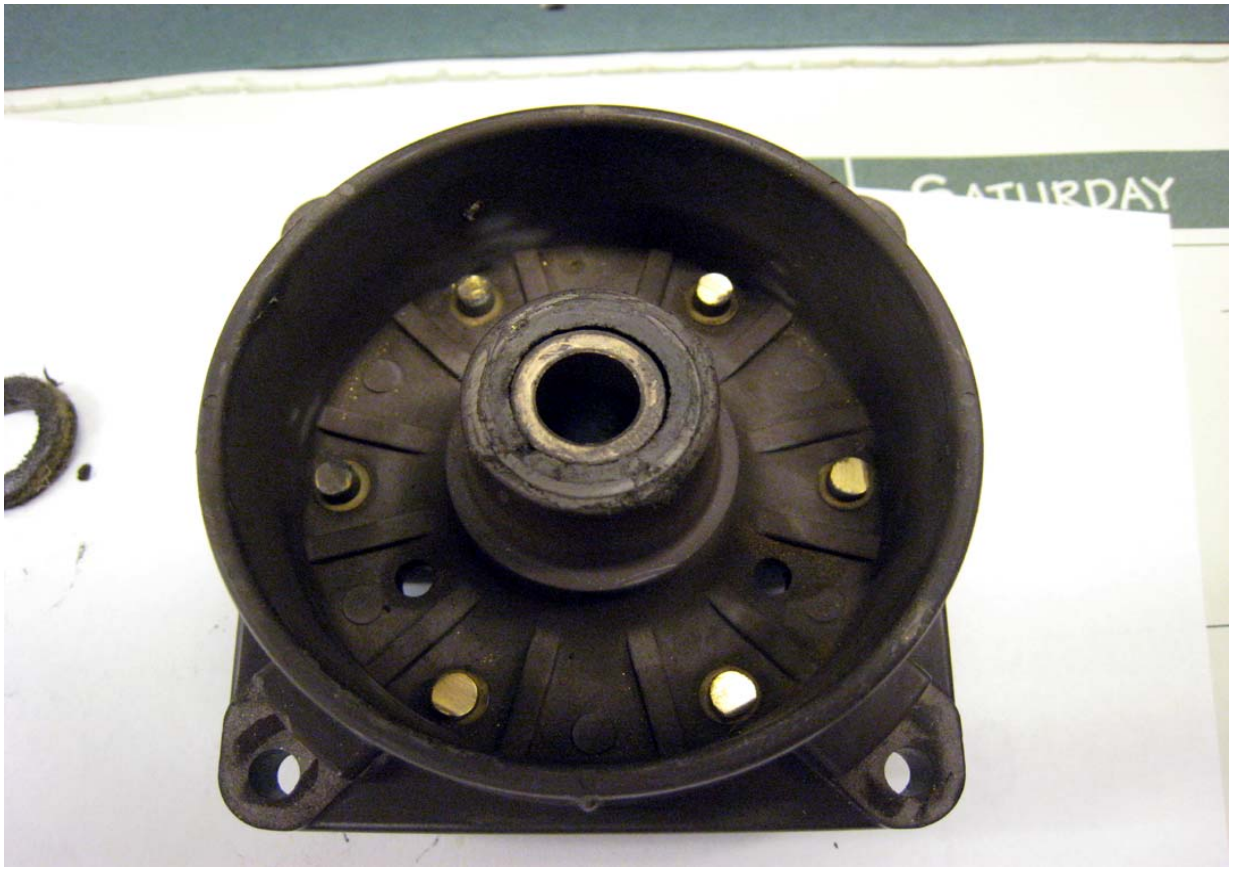
SATURDAY

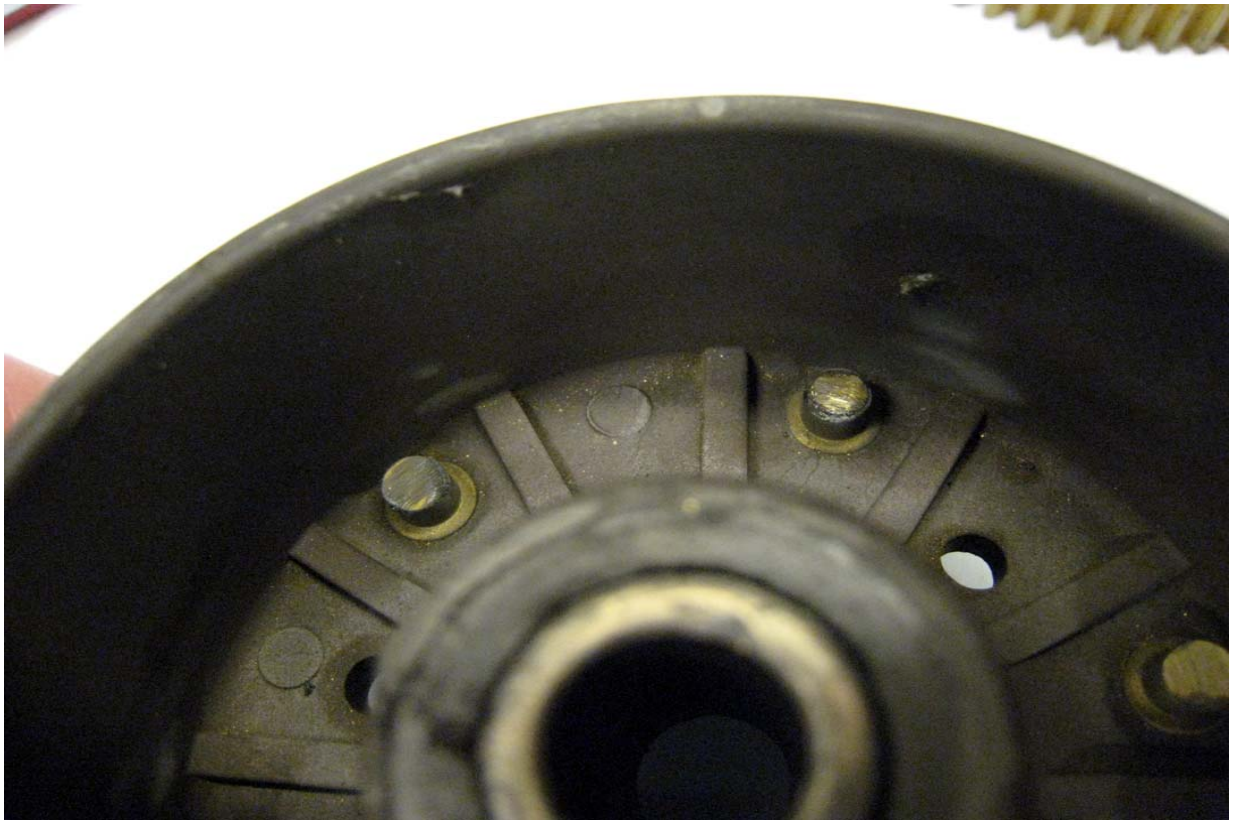

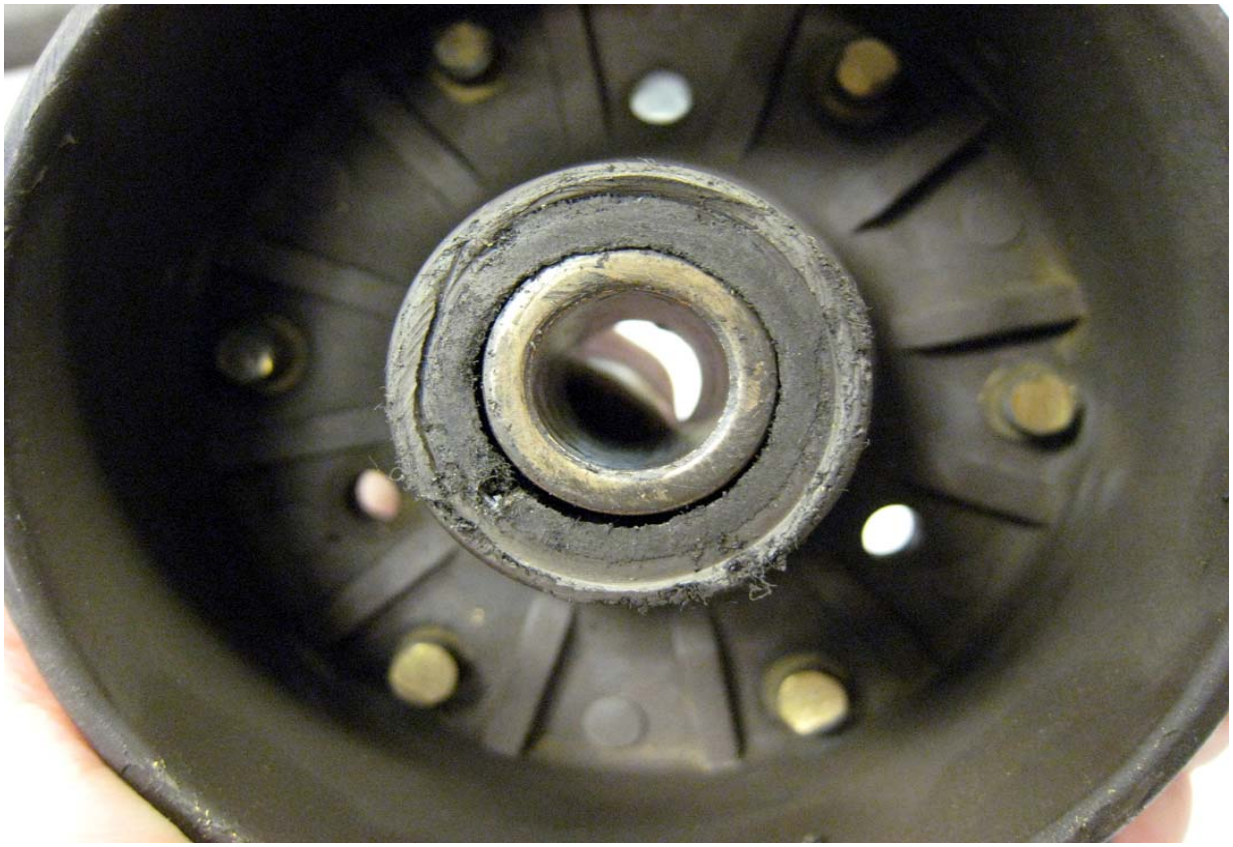

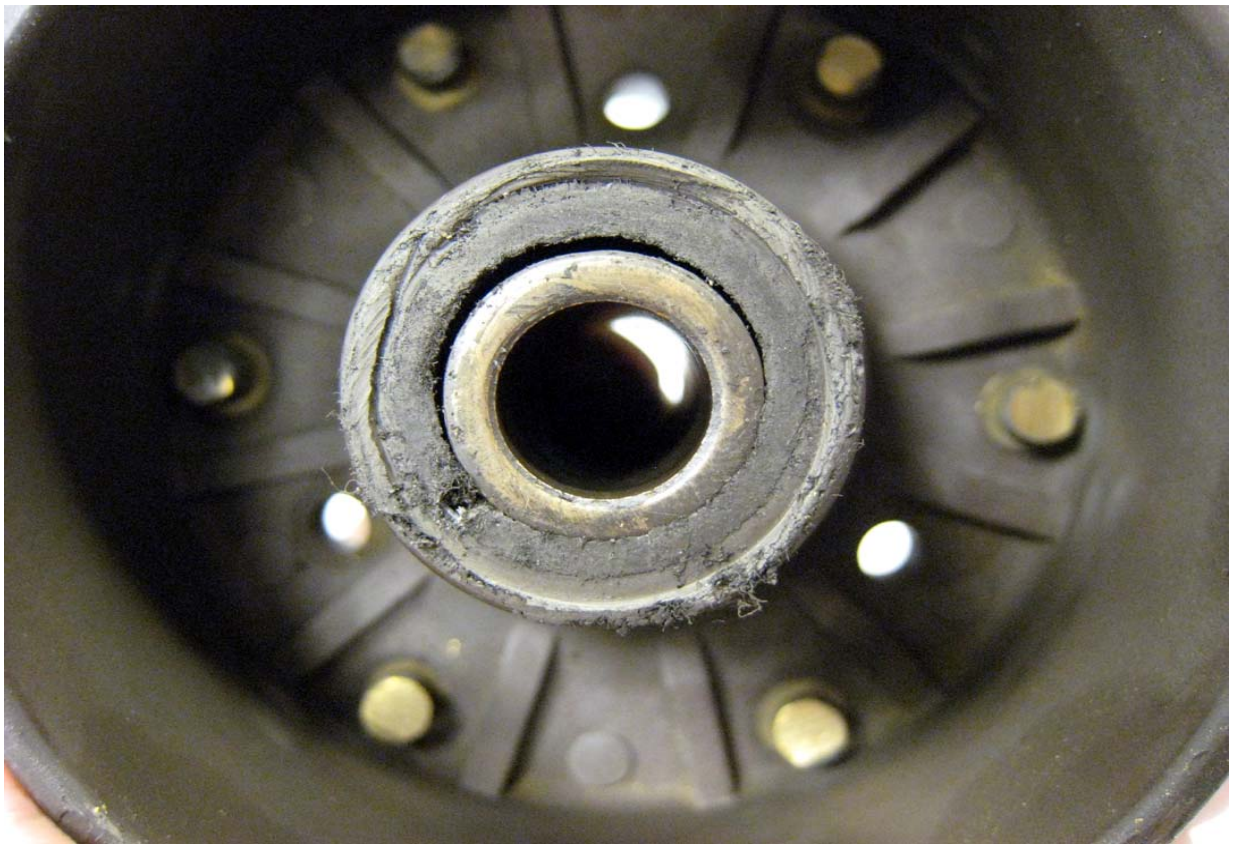

(For further information contact inspector Benischeck at: Quest Diagnostics Flight Operations, 159 Air Museum Drive, Reading, PA, 19605; phone 610-376-6333.)

Part Total Time: 1,307.0 hours

Garmin Autopilot: G1000; Un-Commanded Climb; ATA 3425

An anonymous writer states, "This *(Cirrus SR22)* is a brand new aircraft. During transition training with a Cirrus factory instructor on board, we were on the ILS instrument approach into *(our destination)* airport. Just as we reached the outer marker—with the autopilot engaged in heading mode and about to capture the glide slope—the airplane pitched up very aggressively, which could have led to a stall. We disengaged the autopilot and then flew the exact same approach again. This second time everything worked correctly. This is a new SR22T Cirrus with the Garmin Perspective (G1000) and Garmin autopilot. It is as if the autopilot 'saw' the glide slope was above us (as it should be at the outer marker), and 'went after it' by aggressively trying to climb. This should not happen. Cirrus staff checked all connections and software after the event and it has not happened again. I checked the COPA (Cirrus owners website) and, apparently, this *(event also)* happened once to a Cessna Mustang Jet pilot with a Garmin G1000 autopilot. Fortunately, we were just training. But if this happened in bad weather and not immediately recognized by the pilot, the aircraft would have continued to pitch up and lose airspeed, stalling on short final. This would be deadly in the clouds if not recognized right away, because it could lead to a stall/spin at low altitude in the clouds on the ILS."

Part Total Time: 10.0 hours

AIR NOTES

INTERNET SERVICE DIFFICULTY REPORTING (iSDR) WEB SITE

The Federal Aviation Administration (FAA) Internet Service Difficulty Reporting (iSDR) web site is the front-end for the Service Difficulty Reporting System (SDRS) database that is maintained by the Aviation Data Systems Branch, AFS-620, in Oklahoma City, Oklahoma. The iSDR web site supports the Flight Standards Service (AFS), Service Difficulty Program by providing the aviation community with a voluntary and electronic means to conveniently submit in-service reports of failures, malfunctions, or defects on aeronautical products. The objective of the Service Difficulty Program is to achieve prompt correction of conditions adversely affecting continued airworthiness of aeronautical products. To accomplish this, Malfunction or Defect Reports (M or Ds) or Service Difficulty Reports (SDRs) as they are commonly called, are collected, converted into a common SDR format, stored, and made available to the appropriate segments of the FAA, the aviation community, and the general public for review and analysis. SDR data is accessible through the "Query SDR data" feature on the iSDR web site at: http://av-info.faa.gov/sdrx/Query.aspx.

In the past, the last two pages of the Alerts contained a paper copy of FAA Form 8010-4, Malfunction or Defect Report. To meet the requirements of *Section 508, this form will no longer be published in the Alerts; however, the form is available on the Internet at: http://forms.faa.gov/forms/faa8010-4.pdf. You can still download and complete the form as you have in the past.

*Section 508 was enacted to eliminate barriers in information technology, to make available new opportunities for people with disabilities, and to encourage development of technologies that will help achieve these goals.

A report should be filed whenever a system, component, or part of an aircraft, powerplant, propeller, or appliance fails to function in a normal or usual manner. In addition, if a system, component, or part of an aircraft, powerplant, propeller, or appliance has a flaw or imperfection, which impairs or may impair its future function, it is considered defective and should be reported under the Service Difficulty Program.

The collection, collation, analysis of data, and the rapid dissemination of mechanical discrepancies, alerts, and trend information to the appropriate segments of the FAA and the aviation community provides an effective and economical method of ensuring future aviation safety.

The FAA analyzes SDR data for safety implications and reviews the data to identify possible trends that may not be apparent regionally or to individual operators. As a result, the FAA may disseminate safety information to a particular section of the aviation community. The FAA also may adopt new regulations or issue airworthiness directives (ADs) to address a specific problem.

The iSDR web site provides an electronic means for the general aviation community to voluntarily submit reports, and may serve as an alternative means for operators and air agencies to comply with the reporting requirements of 14 Title of the Code of Federal Regulations (CFR) Section 121.703, 125.409, 135.415, and 145.221, if accepted by their certificate-holding district office. FAA Aviation Safety Inspectors may also report service difficulty information when they conduct routine aircraft maintenance surveillance as well as accident and incident investigations.

The SDRS database contains records dating back to 1974. At the current time, we are receiving approximately 40,000 records per year. Reports may be submitted to the iSDR web site on active data entry form or submitted hardcopy to the following address.

The SDRS and iSDR web site point of contact is:

Pennie Thompson
Service Difficulty Reporting System, Program Manager
Aviation Data Systems Branch, AFS-620
P.O. Box 25082
Oklahoma City, OK 73125
Telephone: (405) 954-5313
SDRS Program Manager e-mail address: 9-AMC-SDR-ProgMgr@faa.gov

IF YOU WANT TO CONTACT US

We welcome your comments, suggestions, and questions. You may use any of the following means of communication to submit reports concerning aviation-related occurrences.

Editor: Daniel Roller (405) 954-3646
FAX: (405) 954-4570 or (405) 954-4655

E-mail address: Daniel.Roller@faa.gov

Mailing address: FAA, **ATTN: AFS-620 ALERTS**, P.O. Box 25082, Oklahoma City, OK 73125-5029

You can access current and back issues of this publication from the internet at: http://av-info.faa.gov/. Select the General Aviation Airworthiness Alerts heading.

AVIATION SERVICE DIFFICULTY REPORTS

The following are abbreviated reports processed for the previous month, which have been entered into the FAA Service Difficulty Reporting System (SDRS) database. This is not an all-inclusive listing of Service Difficulty Reports. For more information, contact the FAA, Regulatory Support Division, Aviation Data Systems Branch, AFS-620, located in Oklahoma City, Oklahoma. The mailing address is:

FAA
Aviation Data Systems Branch, AFS-620
PO Box 25082
Oklahoma City, OK 73125

To retrieve the complete report, click on the Control Number located in each report. These reports contain raw data that has not been edited. Also, because these reports contain raw data, the pages containing the raw data are not numbered.

If you require further detail please contact AFS-620 at the address above.

Federal Aviation Administration

Service Difficulty Report Data

Sorted by aircraft make and model then engine make and model. This report derives from unverified information submitted by the aviation community without FAA review for accuracy.

Control Number	Aircraft Make	Engine Make	Component Make	Part Name	Part Condition
Difficulty Date	**Aircraft Model**	**Engine Model**	**Component Model**	**Part Number**	**Part Location**
2010FA0000733				MAGNET	CRACKED
7/12/2010				BL5005163	MAGNETO

(RL4R) SHAFT BEHIND STEEL DRIVE GEAR CRACKED IN 3 PLACES. POSSIBLY CAUSED BY MFG OVERTIGHTENING RETAINER SCREW. POSSIBLE DEFECTIVE CASTING.

2010FA0000755			HONEYWELL	BELLOWS	FAILED
7/20/2010				2523631	FUEL CONTROL

EVACUATED BELLOWS THAT IS USED IN THE FUEL CONTROL, BREECHED 1.2 HOURS AFTER O/H. THE BELLOWS IS NOT OVERHAULED, JUST INSPECTED IAW THE O/H MANUAL. INSP CRITERIA AT O/H IS HEIGHT CHECK TO DETERMINE POSSIBLE BREACH, VACUUM TEST FOR BREECHING, AND A VISUAL INSP. THE FUEL CONTROL WAS TESTED ON A FLOW BENCH AFTER ASSY AND PASSED AT ALL TEST POINTS. THE BELLOWS IS NOT A TIME LIFE ITEM AND IS STRICTLY CONDITIONAL FOR SERVICEABILITY. MFG HAS REQUIRED REPLACEMENT OF THE BELLOWS AT O/H FOR (1) MODEL ONLY PN 3244777, YET THIS PN BELLOWS IS USED ON SEVERAL OTHER FUEL CONTROL MODELS.

2010FA0000799				ARM	LOOSE
7/26/2010				NN516231	MAGNETO

DISTRIBUTOR ARM COMING LOOSE FORM THE GEAR. WHEN THE ARM COMES LOOSE, IT CAUSES WEAR ON THE ARM CTR AND AS THE CTR WEARS TO A LARGER DIAMETER HOLE, THE ARM FLIES OUT CLOSING THE GAP AND GRINDS INTO THE CONTACTS OF THE DISTRIBUTOR BLOCK. THE MAG RAN NORMAL AND WAS FOUND DURING AN INSPECTION.

2010FA0000800				ARM	LOOSE
7/26/2010				23087042	MAGNETO

DISTRIBUTOR ARM COMING LOOSE FORM THE GEAR. WHEN THE ARM COMES LOOSE, IT CAUSES WEAR ON THE ARM CTR AND AS THE CTR WEARS TO A LARGER DIAMETER HOLE, THE ARM FLIES OUT CLOSING THE GAP AND GRINDS INTO THE CONTACTS OF THE DISTRIBUTOR BLOCK. THE MAG RAN NORMAL AND WAS FOUND DURING AN INSPECTION.

2010FA0000801				ARM	LOOSE
7/23/2010				6889700	MAGNETO

DISTRIBUTOR ARM COMING LOOSE FORM THE GEAR. WHEN THE ARM COMES LOOSE, IT CAUSES WEAR ON THE ARM CTR AND AS THE CTR WEARS TO A LARGER DIAMETER HOLE, THE ARM FLIES OUT CLOSING THE GAP AND GRINDS INTO THE CONTACTS OF THE DISTRIBUTOR BLOCK. THE MAG RAN NORMAL AND WAS FOUND DURING AN INSPECTION.

2010FA0000802				ARM	LOOSE
7/23/2010				6899402	MAGNETO

DISTRIBUTOR ARM COMING LOOSE FORM THE GEAR. WHEN THE ARM COMES LOOSE, IT CAUSES WEAR ON THE ARM CTR AND AS THE CTR WEARS TO A LARGER DIAMETER HOLE, THE ARM FLIES OUT CLOSING THE GAP AND GRINDS INTO THE CONTACTS OF THE DISTRIBUTOR BLOCK. THE MAG RAN NORMAL AND WAS FOUND DURING AN

INSPECTION.

2010FA0000803		ARM	LOOSE
7/23/2010		23087042	MAGNETO

DISTRIBUTOR ARM COMING LOOSE FORM THE GEAR. WHEN THE ARM COMES LOOSE, IT CAUSES WEAR ON THE ARM CTR AND AS THE CTR WEARS TO A LARGER DIAMETER HOLE, THE ARM FLIES OUT CLOSING THE GAP AND GRINDS INTO THE CONTACTS OF THE DISTRIBUTOR BLOCK. THE MAG RAN NORMAL AND WAS FOUND DURING AN INSPECTION.

2010FA0000798	ALLSN	PINION GEAR	DAMAGED
7/26/2010	250C20B	6889700	ENGINE

METAL IS SPREAD AT THE CONTACT POINT OF THE GEAR TEETH. IT APPEARS LIKE THE METAL IS SOFT. THE CONDITION OF THIS GEAR CAUSED A HIGH VIBRATION IN THE ENGINE ASSY.

2010FA0000730	ALLSN	GEAR	FRACTURED
7/7/2010	T63A720	23038229	ENGINE

(YKER) ENGINE WAS SENT FOR REPAIR DUE TO GENERATING METAL. UPON DISASSEMBLY, FOUND THAT THE SHAFT ON THE GEAR HAD FRACTURED APPROX 2.325 IN FROM THE FWD END OF THE SHAFT AT A RADIUS OF APPROX 0.75 IN. THE RELATIVE MOTION BETWEEN THE PIECES WAS THE CAUSE OF THE REPORTED METAL.

2010FA0000725	LYC	SPLINE	SHEARED
7/15/2010	IO540K1G5		FUEL PUMP

FUEL PUMP RECEIVED WITH A SHEARED OFF SPLINE COUPLING. A TEARDOWN ANALYSIS, INSP REPORT EVALUATION, ORIGINAL SALES AND CERTIFICATION DOCUMENTS, APPLICABLE PAGES FROM THE MM AND SB AND PICTURES ARE INCLUDED IN A SEPARATE E-MAIL.

2010FA0000827	PWA	DISK	CRACKED
8/3/2010	JT8D219	777603	ENGINE

DURING DISASSEMBLY OF THE TURBINE MODULE IT WAS NOTICED THAT THE DISK (PN 777603) WAS CRACKED AT THE FIR TREE. ALSO NOTED, WERE (2) CRACKED BLADES (PN 798403), BOTH LOCATED NEAR (WITHIN (1) FIR TREE) OF THE DISC CRACK. THIS IS A KNOWN PROBLEM AND HAS BEEN PREVIOUSLY REPORTED SOME YEARS AGO. HOWEVER, IN THIS INSTANCE THE CRACK HAS OCCURRED IN THE SECOND FIR TREE RATHER THAN THE FIRST (MOVING FROM OUTSIDE INWARDS). MFG AND CUSTOMER HAVE BEEN ADVISED. STILL AWAITING FURTHER ADVICE FROM MFG.

2010FA0000828	PWA	BLADE	CRACKED
8/3/2010	JT8D219	798403	ENGINE

DURING DISASSEMBLY OF THE TURBINE MODULE IT WAS NOTICED THAT THE DISK (PN 777603) WAS CRACKED AT THE FIR TREE. ALSO NOTED, WERE (2) CRACKED BLADES (PN 798403), BOTH LOCATED NEAR (WITHIN (1) FIR TREE) OF THE DISC CRACK. THIS IS A KNOWN PROBLEM AND HAS BEEN PREVIOUSLY REPORTED SOME YEARS AGO. HOWEVER, IN THIS INSTANCE THE CRACK HAS OCCURRED IN THE SECOND FIR TREE RATHER THAN THE FIRST (MOVING FROM OUTSIDE INWARDS). MFG AND CUSTOMER HAVE BEEN ADVISED. STILL AWAITING FURTHER ADVICE FROM MFG.

2010F00172	AEROSP	SEAT TRACK	CORRODED
7/15/2010	ATR72212	S53375001213	ZONE 100

RT INBD SEAT TRACK COMMON TO FRAMES 21-23 CORRODED BEYOND SRM LIMITS. (LEVEL II)

2010F00173	AEROSP	SEAT TRACK	CORRODED
7/15/2010	ATR72212	S53678001244	ZONE 100

LT INBD SEAT TRACK COMMON TO FRAMES 29-36 CORRODED BEYOND SRM LIMITS. (LEVEL II)

2010F00174	AEROSP	SEAT TRACK	CORRODED
7/15/2010	ATR72212	S53678001246	ZONE 100

LT INBD SEAT TRACK COMMON TO FRAMES 29-36 CORRODED BEYOND SRM LIMITS. (LEVEL II)

2010F00175	AEROSP	SEAT TRACK	CORRODED
7/15/2010	ATR72212	S53678001246	ZONE 100

RT INBD SEAT TRACK COMMON TO FRAMES 29-36 CORRODED BEYOND SRM LIMITS. (LEVEL II)

2010F00162	AEROSP	ATTACH FITTING	CORRODED
7/14/2010	ATR72212	S5217622620402	PAX DOOR

PAX CREW DOOR LOWER CLEAT ON 4TH INTERCOSTAL FROM FRONT BETWEEN BEAM 3 AND 4 IS CORRODED BEYOND SRM LIMITS. (LEVEL II)

2010F00163	AEROSP	INTERCOSTAL	CORRODED
7/14/2010	ATR72212	S52176207202	PAX DOOR

PAX CREW DOOR 3RD INTERCOSTAL FROM FWD SIDE BETWEEN BEAM 3 AND 4 IS CORRODED ON OUTER SKIN FLANGE BEYOND SRM LIMITS (LEVEL II)

2010F00161	AEROSP	INTERCOSTAL	CORRODED
7/14/2010	ATR72212	S5217620723401	PAX DOOR

PAX CREW DOOR SECOND FROM FRONT INTERCOSTAL ABOVE BEAM 6 IS CORRODED BEYOND SRM LIMITS AT LOWER INBD CORNER. (LEVEL II)

2010F00164	AEROSP	INTERCOSTAL	CORRODED
7/14/2010	ATR72212		PAX DOOR

PAX CREW DOOR 3RD INTERCOSTAL FROM FWD SIDE BETWEEN BEAM 3 AND 4 IS CORRODED OUT OF SRM LIMITS ON OUTER SKIN FLANGE.(LEVEL II)

2010F00165	AEROSP	PAN	CORRODED
7/14/2010	ATR72212	S52176204206	PAX DOOR

PAX CREW DOOR LOWER FWD PAN IS CORRODED OUTSIDE SRM LIMITS APPROXIMATELY 3 INCHES FWD OF BOTTOM SPLICE AT INNER SKIN. (LEVEL II)

2010F00166	AEROSP	BEAM	MISREPAIRED
7/14/2010	ATR72212	S52176205214	PAX DOORWAY

FOUND UNAPPROVED SRM REPAIR ON FWD END OF PAX DOOR BEAM 8.

2010F00170	AEROSP	SEAT TRACK	CORRODED
7/15/2010	ATR72212	S53570203200	ZONE 100

LT INBD SEAT TRACK COMMON TO FRAME 23-29 CORROSION BEYOND SRM LIMITS. (LEVEL II)

2010F00171	AEROSP	SEAT TRACK	CORRODED
7/15/2010	ATR72212	S53570203200	ZONE 100

RT INBD SEAT TRACK COMMON TO FRAME 23-29 CORRODED BEYOND SRM LIMITS. (LEVEL II)

2010F00167	AEROSP	SEAT TRACK	CORRODED
7/15/2010	ATR72212	S5370203202	ZONE 100

RT OTBD SEAT TRACK FROM FLOORBEAM 29 TO FLOORBEAM 36 HAS PITTING CORROSION AND WEAR BEYOND SRM LIMITS FROM SEAT ATTACHMENTS.

2010F00168	AEROSP	SEAT TRACK	CORRODED
7/15/2010	ATR72212	S53070308200	ZONE 100

CARGO COMPARTMENT SEAT TRACK AT FLOORBEAM 41 RT SIDE HAS (6) INCH AREA IN TRACK WITH CORROSION

BEYOND SRM LIMITS. (LEVEL II)

2010F00169	AEROSP		SEAT TRACK	CORRODED
7/15/2010	ATR72212		S53678001214	ZONE 100

CARGO COMPARTMENT SEAT TRACK LT SIDE AT FLOORBEAM 36-41 HAS CORROSION BEYOND SRM LIMITS. (LEVEL II)

2010F00178	AEROSP		FLOORBEAM	CORRODED
7/22/2010	ATR72212		S5317320020402	ZONE 100

FLIGHT DECK, FLOORBEAM 11 ABOVE STRINGER 20L HAS SURFACE CORROSION ON UPPER SURFACE AND ON INTERCOSTAL JUST AFT OF BEAM CORROSION BEYOND SRM LIMITS. (LEVEL II)

2010F00190	AEROSP		STRINGER	CRACKED
8/12/2010	ATR72212		S53371100204	ZONE 100

STRINGER 1L AT FRAME 20 CRACKED AT DRAIN HOLE.

2010F00191	AEROSP		STRINGER	CRACKED
8/12/2010	ATR72212		S53371100205	ZONE 100

STRINGER 1R AT FRAME 20 CRACKED DRAIN HOLE

2010F00177	AEROSP	PWA	CREASE BEAM	CORRODED
7/22/2010	ATR72212	PW120	S53671318210	ZONE 100

RT CREASE BEAM WEB AFT OF FRAME 39 HAS AREAS OF CORROSION BEYOND SRM LIMITS. (LEVEL II)

2010F00184	AEROSP	PWA	SPAR	CORRODED
7/29/2010	ATR72212	PW120	S55171201201	ZONE 300

RT HORIZONTAL STAB REAR SPAR WEB HAS AN AREA OF CORROSION BELOW PANEL 342 EZ BEYOND SRM LIMITS (LEVEL II).

2010FA0000766	AGUSTA	PWC	PUMP	LEAKING
7/26/2010	AB139	PT6C67C	3G2910V00133	HYD SYSTEM

AFTER TAKEOFF, AFTER SELECTION OF LANDING GEAR UP, CAS DISPLAYED HYD UTIL PRESS AND MAIN GEAR POSITION INDICATION TURNED TO AMBER. IAW RFM MALFUNCTION PROCEDURE, LANDING GEAR RESELECTED DOWN BUT WOULD NOT LOCK. EMERGENCY LANDING GEAR EXTENSION DEPLOYED & LANDING GEAR SUCCESSFULLY EXTENDED. CONTINUED TO DESTINATION AND LANDED WITHOUT FURTHER INCIDENT. INVESTIGATION REVEALED UTILITY SYS HYD FLUID HAD LEAKED OUT THROUGH PUMP DRAIN. ACFT OEM WILL ARRANGE FOR TEARDOWN & INVESTIGATION OF FAULTY PUMP.

2010FA0000812	AIRBUS		FLOORBEAM	CORRODED
8/9/2010	A300*		D2551033700140	FUSELAGE

CORROSION ON CABIN FLOORBEAM FR 24A LBL 10. NO CORROSION REMOVAL LIMITS FOUND IN SRM. R & R FLOORBEAM IAW SRM 51-42-11. FLOORBEAM IS LISTED AS PRIMARY STRUCTURE.

2010FA0000813	AIRBUS		PROFILE	CRACKED
8/9/2010	A300*		D5391160920000	FUSELAGE

FWD CARGO COMPARTMENT LT SIDE FLOOR SUPPORT PROFILE CRACKED AT FR 24 LBL 10. PROFILE IS LISTED AS PRIMARY STRUCTURE. R & R PROFILE IAW SRM 51-42-11.

2010F00181	AIRBUS		TIRE	SEPARATED
7/28/2010	A320211		M0110302	NR 3 MLG

ON LANDING THE NR 3 MAIN TIRE RECAP SEPARATED FROM THE TIRE BODY, CAUSING ACFT DAMAGE.

2010FA0000751	AIRBUS		ACCESS PANEL	CORRODED

7/20/2010	A320232	D5725132620051	LT WING

CORROSION ON LT WING FUEL TANK ACCESS PANEL 540KB. NO CORROSION REMOVAL LIMITS FOUND IN SRM. PANEL IS LISTED AS A PRIMARY STRUCTURAL ELEMENT. REMOVED PANEL AND REPLACED WITH NEW PANEL.

2010FA0000771	AIRBUS	CYLINDER	READS LOW
7/28/2010	A320232	FE240004	R1 DOOR

R -1 DOOR ASSIST CYLINDER GUAGE READS ZERO. SERVICED AND LEAK CHECKED R-1 DOOR ASSIST CYLINDER IAW AMM 52-10-00, NO LEAKAGE NOTED OVER 40 HOUR PERIOD.

2010FA0000745	AIRBUS	ACCESS PANEL	CORRODED
7/19/2010	A320232	D5725131220200	ZONE 600

CORROSION ON RT WING FUEL TANK ACCESS PANEL 640MB. NO CORROSION REMOVAL LIMITS FOUND IN SRM. PANEL IS LISTED AS A PRIMARY STRUCTURAL ELEMENT. REPLACED PANEL WITH NEW PANEL.

2010FA0000740	AIRBUS	ACCESS PANEL	CORRODED
7/19/2010	A320232	D5725131220200	ZONE 500

CORROSION ON RT WING FUEL TANK ACCESS PANEL 640NB. NO CORROSION REMOVAL LIMITS FOUND IN SRM. PANEL IS LISTED AS A PRIMARY STRUCTURAL ELEMENT. REPLACED PANEL WITH NEW PANEL.

2010FA0000741	AIRBUS	ACCESS PANEL	CORRODED
7/19/2010	A320232	D5725131220200	ZONE 500

CORROSION ON FUEL TANK ACCESS PANEL 540NB. NO CORROSION REMOVAL LIMITS FOUND IN SRM. PANEL IS LISTED AS PRIMARY STRUCTURAL ELEMENT. REPLACED PANEL WITH NEW PANEL.

2010FA0000743	AIRBUS	ACCESS PANEL	CORRODED
7/19/2010	A320232	D5725148120400	ZONE 500

CORROSION ON LT WING FUEL TANK ACCESS PANEL 550AB. NO CORROSION REMOVAL LIMITS FOUND IN SRM. PANEL IS LISTED AS A PRIMARY STRUCTURAL ELEMENT. REPLACED PANEL WITH NEW PANEL.

2010FA0000744	AIRBUS	ACCESS PANEL	CORRODED
7/19/2010	A320232	D5725131220200	ZONE 500

CORROSION ON LEFT WING FUEL TANK ACCESS PANEL 540QB. NO CORROSION REMOVAL LIMITS FOUND IN SRM. PANEL IS LISTED AS A PRIMARY STRUCTURAL ELEMENT. REPLACED PANEL WITH NEW PANEL.

2010FA0000742	AIRBUS	ACCESS PANEL	CORRODED
7/19/2010	A320232	D5725131220200	ZONE 500

CORROSION ON FUEL TANK ACCESS PANEL 540PB. NO CORROSION REMOVAL LIMITS FOUND IN SRM. PANEL IS LISTED AS A PRIMARY STRUCTURAL ELEMENT. REPLACED PANEL WITH NEW PANEL.

2010FA0000818	AIRBUS	PANEL	CORRODED
8/10/2010	A320232	D5725095700400	ZONE 500

CORROSION ON LT WING PANEL 574BB. NO CORROSION REMOVAL LIMITS AVAILABLE. PANEL IS LISTED AS PRIMARY STRUCTURE. REPLACED PANEL WITH NEW PANEL.

2010FA0000817	AIRBUS	SHEAR PLATE	CORRODED
8/10/2010	A320232	D5347112420100	FUSELAGE

CORROSION ON CABIN FLOOR SHEAR PLATE FR 70 RBL 49. NO CORROSION REMOVAL LIMITS AVAILABLE. R & R PLATE IAW SRM 51-42-11.

2010FA0000777	AIRBUS	TARGET	MISALIGNED
8/4/2010	A320232		EMERGENCY EXIT

RT WING EXTERNAL EMERGENCY SLIDE LIGHTS NOT ILLUMINATING IN TEST. REALIGNED TARGETS ON MID CABIN

EMERGENCY DOOR FLAP HANDLES IAW AWDM 31-54-43. OPS CHECKED GOOD IAW AMM 33-51-15.

2010FA0000779	AIRBUS	LIGHT	NO TEST
8/4/2010	A320232		ZONE 100

EMERGENCY LIGHT SYS TEST FAULT NO COMMUNICATION. RESET CIDS DIRECTORS IAW AMM 23-73-00. FAULT DID NOT REOCCUR ON 6 RELOAD SCAN.

2010FA0000747	AIRBUS	ACCESS PANEL	CORRODED
7/19/2010	A320232	D5725131120200	ZONE 500

CORROSION ON FUEL TANK ACCESS PANEL 640HR. NO CORROSION REMOVAL LIMITS FOUND IN SRM. PANEL IS LISTED AS A PRIMARY STRUCTURAL ELEMENT. REPLACED PANEL WITH NEW PANEL.

2010FA0000748	AIRBUS	FLOOR PANEL	CORRODED
7/19/2010	A320232	D5367321000000	ZONE 100

SURFACE CORROSION SEVERAL SPOTS ON AFT CARGO COMPARTMENT FLOOR PANEL 161DF. NO CORROSION REMOVAL LIMITS FOUND IN SRM. PANEL IS LISTED AS PRIMARY STRUCTURE. REPAIRED PANEL IAW SRM 53-02-00 FIG 207.

2010FA0000753	AIRBUS	ACCESS PANEL	CORRODED
7/20/2010	A320232	D572531220200	ZONE 500

CORROSION ON LT WING FUEL TANK ACCESS PANEL 540MB. NO CORROSION REMOVAL LIMITS FOUND IN SRM. PANEL IS LISTED AS A PRIMARY STRUCTURAL ELEMENT. REMOVED PANEL AND REPLACED WITH NEW PANEL.

2010FA0000754	AIRBUS	ACCESS PANEL	CORRODED
7/20/2010	A320232	D5725132620051	ZONE 500

CORROSION ON LT WING FUEL TANK ACCESS PANEL. NO CORROSION REMOVAL LIMITS FOUND IN SRM. PANEL IS LISTED AS A PRIMARY STRUCTURAL ELEMENT. REMOVED PANEL AND REPLACED WITH NEW PANEL.

2010FA0000752	AIRBUS	ACCESS PANEL	CORRODED
7/20/2010	A320232	D5725132620051	ZONE 600

CORROSION ON RT WING FUEL TANK ACCESS PANEL 640KB . NO CORROSION REMOVAL LIMITS IN SRM. PANEL IS LISTED AS A PRIMARY STRUCTURAL ELEMENT. REMOVED PANEL AND REPLACED WITH NEW PANEL.

2010FA0000816	AIRBUS	ACCESS PANEL	CORRODED
8/10/2010	A320232	D5725132620051	ZONE 500

CORROSION ON LT WING FUEL TANK ACCESS PANEL 540 HB. NO CORROSION REMOVAL LIMITS FOUND IN SRM. PANEL IS LISTED AS PRIMARY STRUCTURE. REPLACED PANEL WITH NEW PANEL PN D5725132620051.

2010FA0000824	AMD	GE	ELEMENT	DEFECTIVE
8/3/2010	FALCON10			

INSTALLED A NEW LAMP PN Q4581 ON ACFT. ACFT MADE (1) LANDING AFTER THE INSTALLATION AND THE ELEMENT FELL OUT OF ITS SOLDERED LOCATION INSIDE THE GLOBE. PROBABLE CAUSE: SOLDERED JOINT DEFECTIVE.

2010FA0000786	AMD	TUBE	CRACKED
7/19/2010	FALCON20	MY2072846	HYDRAULIC SYS

THE ACFT DEPARTED, APPROX 120 MILES, THE "JEWEL LIGHT" ON THE HYD QUANTITY INDICATOR ILLUMINATED INDICATING A LOW HEAD PRESSURE ON EITHER THE NR 1 OR NR 2 HYD RESERVOIRS. THE FLIGHT CREW PROCEEDS WITH THE CHECKLIST, THE DECISION AT THIS POINT WAS TO TURN BACK AND LAND TO CORRECT THE PROBLEM. DISCREPANCY WAS INVESTIGATED, THE PROBLEM WAS TROUBLESHOT TO THE NR 2 HYD SYS. THE LINE FROM THE RESERVOIR TO THE BLEED AIR PRESSURE REDUCER WAS FOUND TO HAVE A CRACK CAUSE LOSS OF HEAD PRESSURE TO THE SYS. A NEW LINE PN MY20728-46 WAS INSTALLED. AFTER 33 YARS AND MORE THEN 15,000 HRS WITH THE LINE SUBJECTED TO ITS ENVIRONMENT AND VIBRATION IT SET UP A GIVEN

SITUATION THAT CAUSE FATIGUE AND CAUSED THE LINE TO CRACK. RECOMMEND THAT ON THE Z-INSPECTION (24 MONTHS) AFTER THE HYD SYSTEM HAS HAD THE FILTRATION SYS CHANGED, THE SYSTEM BE SERVICED AND PRESSURIZED AND A LEAK CHECK/INSP OF THE PLUMBING FOR THAT SYS IN THE REAR EQUIPMENT BAY BE ACCOMPLISHED.

2010FA0000826	AMTR	ROTAX	CONNECTOR	DAMAGED
7/25/2010	PULSARSERIE3	ROTAX914	956580	OIL TANK

BENT SOCKET ASSY THAT CONNECTS THE OIL SUMP TO THE ENGINE OIL SYSTEM HAD VIBRATED LOOSE RESULTING IN AIR GETTING DRAWN INTO THE OIL SYS. RUN UP OF AIRPLANE PRIOR TO DEPARTURE DID NOT DISPLAY ANY ANOMALIES IN THE OIL PRESSURE. TAKEOFF COMMENCED. AT APPROX 300` IN THE AIR THE ENGINE LOST POWER. DECLARED AN EMERGENCY AND LANDED ON RUNWAY 32. PERSONAL RECOMMENDATIONS TO PREVENT THIS OCCURRENCE FROM HAPPENING IN THE FUTURE WOULD BE TO FASTEN A HOSE CLAMP ON TOP OF THE CONNECTOR NUT THEN USE THE CLAMP TO SAFETY WIRE THE NUT TO PREVENT THIS FITTING FROM COMING LOOSE.

2010FA0000811	AYRES	PWA	TUBE	FLAT
8/9/2010	S2RT660	PT6*	29X11010	MLG TIRE

29 X 1100 TUBE USED IN VARIOUS APPLICATIONS OF ACFT. THIS TUBE WENT FLAT IN 10 DAYS. HOLE WAS FOUND IN TUBE WITH NO PUNCTURE MARK ON TIRE. THICKNESS OF TUBE IS REAL THIN. APPROXIMATE THICKNESS OF TUBE AT FAILED AREA .030. CUT AND MEASURED ANOTHER TUBE, AND IT MEASURED .100.

2010FA0000761	BAC	LYC	COOLER	CRACKED
7/12/2010	146200A	ALF502R5	D115010A	HYD SYSTEM

THE FLIGHT CREW RECEIVED A HYD SYS LOW QUANTITY LIGHT (ON THE "GREEN" SYS) IN THE COCKPIT. SYS QUANTITY AND PRESSURE WERE NOTED TO BE LOW ON THE COCKPIT INDICATIONS. THE ACFT LANDED UNEVENTFULLY. POST FLIGHT INSP REVEALED THAT THE STANDBY GENERATOR HYD SYS COOLER HAD LEAKED FROM A CRACK THAT APPEARS TO HAVE ORIGINATED AT A MFG WELDED SEAM. COMPONENT HAS BEEN RETURNED TO THE MFG FOR INSP AND ANALYSIS.

V0DR967Y001	BEECH		SPACER	MISMANUFACTURED
8/11/2010	1900D		50124041	BRAKE ASSEMBLY

(V0DR) A SPACER, PN 5012404-1 WAS INSTALLED NEW FROM STOCK INTO A BRAKE ASSY PN 5006749-5R. DURING TESTING, THE MECHANIC WAS UNABLE TO ACHIEVE DESIRABLE SPACING BETWEEN BRAKE PARTS. THE SPACER, PN 5012404-1 WAS REMOVED AND INSPECTED IAW COMPONENT MM. THE SPACER WAS FOUND TO BE UNSERVICEABLE IAW CMM. ALL SPACERS IN STOCK HAVE BEEN REMOVED FROM SERVICE AND QUARANTINED.

2010FA0000768	BEECH	CONT	CYLINDER	CRACKED
7/27/2010	58	IO520CB	AEC65385	ENGINE

CYLINDERS ARE CRACKING IN THE INTAKE PORT BETWEEN THE FINS. HAD 8 OUT OF 12 CYLINDERS WITH FUEL STAINS BETWEEN THE FINS ON THE INTAKE PORT SIDE OF THE CYLINDER.

2010FA0000746	BEECH	CONT	BEVEL GEAR	CHIPPED
7/19/2010	A36	IO550B		ENGINE

ALTERNATOR FAILURE IN FLIGHT. NORMAL LANDING. UPON REMOVAL OF ALTERNATOR BY MX, (FRT MOUNT, DIRECT DRIVE ALTERNATOR) FOUND ALTERNATOR DRIVE GEAR INSIDE ENGINE TO BE DAMAGED (GEAR TEETH CHIPPED, AND "ARC'ED LOOKING") NO SIGNS OF DAMAGE TO THE "DRIVEN" (ALTERNATOR) GEAR. ALTERNATOR FAILURE WAS AN ELECTRICAL FAILURE (OPEN STATOR WINDINGS) NOT MECHANICAL (IE: NO BRG FAILURE OR SHAFT FAILURE). UNKNOWN IF DAMAGE OCCURED FROM THIS ALTERNATOR OR PREVIOUSLY. NO RECORD OF PREVIOUS ALTERNATOR REPLACEMENT. ALL TIMES LISTED ARE SINCE NEW, NOT O/H OR REPAIR OR INSP.

2010FA0000785	BEECH	CONT	CAMSHAFT	WORN
7/30/2010	A36	IO550B	649322A1	ENGINE

DURING REMOVAL OF CYLINDER ASSEMBLIES FOR TOP O/H, FOUND SEVERAL LIFTERS SPALLED AND EXCESSIVE CAM LOBE WEAR. RECOMMEND THAT AD 2010-11-04 AND TCM MSB098A BE REVISED TO INCLUDE ENGINE MFG

EARLIER THAN SPECIFIED IN THE AD. THIS ENGINE WAS BUILT IN 2005.

2010F00160	BEECH		MANIFOLD	BROKEN
7/14/2010	C90		9091009913	BLEED SYSTEM

DURING MAINT ACTIONS, DISCOVERED ALL BLEED FLEX LINES TO ENGINE INTAKE ANTI/DE-ICE HAD BROKEN ON BOTH ENGINES. NO OTHER DAMAGE NOTED TO NACELLE OR PYLON. REPAIRED AS NECESSARY WITH NEW COMPONENTS.

2010F00157	BEECH		FLEX DUCT	BROKEN
7/13/2010	C90		9091009913	ENGINE ANTI ICE

BOTH ENGINE INLET ANTI/DE-ICE MANIFOLDS WERE BROKEN ON BOTH ENGINES.

2010FA0000810	BEECH	PWA	ILS SYSTEM	MALFUNCTIONED
7/24/2010	C90A	PT6A21	G1000	COCKPIT

ACFT UNSTABLE ON ILS APPROACH. MAKES "S" TURNS ACROSS THE LOCALIZER, WHETHER AUTOPILOT IS ENGAGED OR NOR. FLIGHT DIRECTOR COMMAND BARS COMMAND THE "S" TURNS. FIELD SERVIC ENGINEERS HAVE RIDDEN ALONG FOR MULTIPLE APPROACHES AND HAVE SEEN THE PROBLEM. THIS ISSUE DOES NOT APPEAR AT ANY OTHER AIRPORT WHER WE HAVE MADE ILS APPROACH. IT DOES NOT OCCUR ON THE GPS APPROACH. IT DID NOT OCCUR AT RUNWAY 24L, WHICH HAS THE SAME LOCALIZER FREQUENCY (111.7 MHZ). WE ASK OTHER ACFT TO FLY THE APPROACH. IT IXPERIENCED THE SAME PROBLEM. NO OTHER ACFT TYPE EQUIPPED WITH A G1000 THAT WE KNOW OF HAS EXPERIENCED THE SAME ISSUE. ONLY THIS ACFT WITH THIS STC. BELIEVE THIS SAFETY ISSUE WARRANTS A SB. MFG BELIEVES THERE IS AN INTERFERENCE PROBLEM ON THE ILS FREQUENCY.

2010FA0000774	BEECH		WIRE	DAMAGED
7/30/2010	E55			LANDING LIGHT

DURING AN ACCIDENT INVESTIGATION RESULTING FROM A LANDING GEAR COLLAPSE & PRIOR LOSS OF ELECTRICAL POWER PRIOR TO LANDING, A 16 GAUGE ELECTRICAL WIRE FOR THE RT STROBE LIGHT WAS FOUND LODGED BETWEEN THE LT MLG ARM ON THE MLG GEARBOX AND THE ATTACHMENT EYE FOR THE LT MAIN LANDING GEAR ACTUATION ARM. THE WIRE WAS ONLY SECURED TO THE LT FLAP ACTUATOR CABLE AND WAS NOT SECURED ABOVE THE MAIN LANDING GEARBOX OR ALONG THE RT SIDE. THE WIRE EXHIBITED SIGNS OF INSULATION DAMAGE WHERE IT WAS LODGED UNDER THE ATTACHMENT ARM AND HAD BEEN PULLED WITH SUCH FORCE THE WIRE BROKE WHERE IT PASSED THROUGH A HOLE IN A FRAME ON THE LT FUSELAGE SIDEWALL (BEHIND THE LT SIDEWALL PANEL). THE WIRE APPEARS TO HAVE BEEN CAUGHT BY THE LT MAIN GEAR ACTUATING ARM AND WAS SUBSEQUENTLY PULLED INTO THE AREA UNDER THE PILOTS SEAT MOST LIKELY THE RESULT OF A PREVIOUS GEAR RETRACTION. THIS SECTION OF WIRE, APPROX 12 INCHES IN LENGTH, WOULD HAVE BEEN CONFINED AND MOVED BETWEEN THE LT MAIN GEAR ACTUATING ROD ATTACHMENT POINT AND THE TIE-WRAP ON THE LT FLAP CABLE WHICH WAS JUST INBD OF THE MOUNTING LOCATION FOR THE PILOTS SEAT RAIL. IT IS NOT KNOWN WHEN THIS WIRE BECAME LODGED UNDER THE ATTACHMENT EYE. IT IS UNKNOWN IF THIS WIRE MAY HAVE ATTRIBUTED TO THE EVENT IN REGARDS TO THE ELECTRICAL ISSUES OR A POSSIBLE FALSE ACTIVATION OF THE GEAR LIMIT SWITCHES. THE STROBE LIGHT SYS WAS INSTALLED ON 02/20/1981 IAW STC SA-800 EA.

2010FA0000814	BEECH	CONT	CIRCUIT BREAKER	INOPERATIVE
8/9/2010	F33A	IO520BB	35380132103	CABIN

PILOT REPORTED TAXI LIGHT INOPERATIVE. ON TROUBLESHOOTING TECH FOUND CIRCUIT BREAKER/ TO BE AT FAULT AD 2008-13-17 HAD BEEN COMPLETED 1879 FLIGHT HOURS PRIOR AND ESTIMATED CYCLES 7516. NO PROBABLE CAUSE OR RECOMMENDATIONS AT THIS TIME.

2010FA0000804	BEECH	CONT	KELLY	BEARING	WORN
8/6/2010	F33A	IO550B			ALTERN DRIVE

GEAR DRIVEN ALTERNATOR, DRIVE END MAIN SHAFT BEARING RETAINER EARS TORN OFF ALLOWING EXCESSIVE MAIN SHAFT END PLAY IN EXCESS OF .100 . EXCESSIVE END PLAY OF SHAFT CAUSED ALTERNATOR DRIVE END BEARING TO BADLY GAUL THE ALTERNATOR CASE AND ALTERNATOR BRUSHES TO WANDER ON THE SLIP RINGS

INTERMITTENTLY TRIPPING THE OVERVOLTAGE RELAY. ALTERNATOR WAS ON THE VERGE OF A CATASTOPHIC FAILURE WHEN REMOVED.

2010FA0000831	BLANCA	CONT	ROD END	FAILED
7/30/2010	1730A	IO520K	1980012	NLG

DURING TOUCHDOWN, NLG FAILED AND PARTIALLY COLLAPSED UPON CONTACT WITH THE RUNWAY. DURING THE INVESTIGATION AND RESEARCH INTO THE NLG SYS AND LINKAGE, IT APPEARS THE BEARING ROD END (PN 198001-2) TO THE EXTENSION ASSY, EXPERIENCED A FATIGUE FAILURE. BASED ON THE FRACTURE SIGNATURE, THE FAILURE APPEARS TO BE A MILD TO HIGH STRESS CONCENTRATION, ONE-WAY BENDING LOAD. THE ROD-END FAILED AT A POINT WHERE THE ROD-END THREADS AND AN316-4R NUT MET, SHEARING EVEN WITH THE NUT FACE. ROD-END THREADS WERE STRETCHED AND BENT AT A 15-DEGREE ANGLE WITH ABOUT .5" OF THREADS SHOWING. ROD-END BEARING MOVEMENT WAS SATISFACTORY. WHEN THE NLG TIRE CONTACTED THE RUNWAY, THE OVER-CENTER EXTENSION ASSY TO THE NLG FWD AND AFT DRAG STRUTS FAILED AT THE ROD END (PN 198001-2) AND BOTH STRUTS WERE ALLOWED TO TRAVEL BEYOND THE PROPER HORIZ POSITION, CONTINUING BELOW HORIZONTAL ALLOWING THE NOSE WHEEL TO MOVE AFT AT TOUCHDOWN AND FORCING THE AFT DRAG STRUT TO PIN THE FWD DRAG STRUT AGAINST THE WHEEL CYLINDER. WITH THE DRAG STRUTS PINNED AGAINST THE NLG CYL, THE ABILITY TO STEER THE NOSE WHEEL WITH THE RUDDER PEDALS WAS LOST. THE WHEEL WENT SLIGHTLY TO THE LT AT CONTACT WITH THE RUNWAY AND JAMMED. AT THIS POINT THE ACFT VEERED SHARPLY LT AND OFF THE RUNWAY.

CHIR07122010001	BOEING	BOEING	PISTON	BROKEN
7/12/2010	107*		A02R27443	LAG DAMPER

CAME TO A HOVER ABOVE THE HOOKER, AT THAT TIME WE FELT A LIGHT TO MODERATE LATERAL SHUFFLE. NO UNUSUAL NOISE. NOT KNOWING WHAT WAS CAUSING THE SHUFFLE, WE CHECKED THE SAS SYS, SINGLE, BOTH AND NO SAS WITH NO CHANGE IN THE SHUFFLE. PILOT APPLIED POWER AND IT GOT SLIGHTLY WORSE AND DECREASED POWER IT REDUCED THE INTENSITY A BIT. THEN DECIDED TO TRY A LITTLE FWD AIR SPEED TO SEE IF IT GOT WORSE. IT DID NOT, SO WE DECIDED TO FLY BACK TO SERVICE TO CHECK IT OUT, APPROX. 1NM. LANDED WITHOUT FURTHER PROBLEMS. ONCE ON THE GROUND, THE MX CHECKED THE EXTERIOR OF THE ACFT THEN CAME INSIDE AND CHECKED THE SAS CLOSET AND FOUND NOTHING VISIBLY WRONG. PILOT SHUT THE ACFT DOWN. DURING COAST DOWN, RPM UNSURE BUT BELOW 40 PERCENT, THERE WAS SEVERAL LOUD BANGS OVERHEAD. AFTER THE BLADES HAD STOPPED WE CHECKED UP TOP FWD, AND FOUND THE FWD RED LAG DAMPER SHAFT BROKEN. AFTER FURTHER INSP. THE MX FOUND THAT THE RED PITCH ARM WAS DAMAGED AND CRACKED. ASLO FOUND DAMMAGE TO THE GREEN PITCH ARM. PROTECTED FROM THE WIND AT SERVICE SO DON'T KNOW IF IT WAS A CONTRIBUTING FACTOR. HAD BEEN FLYING LOGS FOR APPROX 50 MIN AND HAD NOT NOTICED ANYTHING UNUSUAL PRIOR TO THE EVENT.

ABXR2010081100033	BOEING	FAIRING	CRACKED
8/11/2010	727225	65217966	RT WING TE FLAP

(ABXR) DURING A HEAVY MX INP EVENT, THE RT WING OTBD FLAP, INBD FLAP TRACK, FWD FAIRING WAS FOUND TO BE CRACKED AND DENTED. R & R FAIRING. ITEM RETURNEDTO SERVICE.

ABXR2010081100032	BOEING	BRACKET	MISALIGNED
8/11/2010	727225	651724023	SLAT ACTUATOR

DURING A HEAVY MX, THE NR 7 SLAT ACTUATOR NOT ALIGNING WITH NR 7 SLAT MOUNT POINT DUE TO SLAT ACTUATOR MOUNTING BRACKET HOLE LOCATIONS WITH INCORRECT DIMENSIONS. R & R BRACKET. ITEM RETURNED TO SERVICE.

ABXR2010081100037	BOEING	PWA	INTERCOSTAL	DAMAGED
8/11/2010	727225	JT8D15	AE727104315	ZONE 100

DURING A STORM DAMAGE REPAIR MX EVENT & DURING A SKIN REPLACEMENT AN INTERCOSTAL WAS DISCOVERED WITH MULTIPLE HOLES IN THE RADIUS. FABRICATED NEW INTERCOSTAL AND INSTALLED. ITEM RETURNED TO SERVICE.

ABXR2010081100034	BOEING	PWA	FAIRING	CRACKED
8/11/2010	727225	JT8D15	65217966	RT WING TE FLAP

DURING A HEAVY MX EVENT THE RT WING OTBD FLAP, INBD FLAP TRACK, FWD FAIRNG WAS FOUND TO BE CRACKED AND DENTED. R & R FAIRING. ITEM RETURNED TO SERVICE.

EE4Y1010327	BOEING	FLOOR SUPPORT	CORRODED
8/10/2010	7272B7	656097119	ZONE 200

MAIN CARGO CABIN FLOOR SUPPORT CHANNEL CORRODED AT BS 1145, LBL 12.

EE4Y1010328	BOEING	COVER	CORRODED
8/10/2010	7272B7	652453620	ZONE 100

LOWER FUSELAGE, RAM AIR DOOR INLET AREA, VERTICAL FIXED COVER WITH CORROSION.

EE4Y1010329	BOEING	KEELBEAM	CORRODED
8/10/2010	7272B7	65C339191	ZONE 100

LOWER FUSELAGE AFT CARGO COMPARTMENT FROM 950D TO STA 1000, KEEL BEAM LT CORRODED.

EE4Y1010325	BOEING	SKIN PANEL	CRACKED
8/10/2010	7272B7	2024T3CLAD	ZONE 100

LOWER FUSELAGE SKIN WITH CRACK AT BS 243, WL 178, LT SIDE.

EE4Y1010326	BOEING	PWA	KEELBEAM	CORRODED
8/10/2010	7272B7	JT8D17	65C33919	ZONE 100

LOWER FUSELAGE AFT CARGO COMPARTMENT FROM BS 950A TO BS 989, KEEL BEAM RT WITH CORROSION.

2010F00182	BOEING	SEAT	LOOSE
7/28/2010	737		CABIN

THE SEATS LOCATED IN ROW 11E ON ACFT WERE NOT BOLTED DOWN PROPERLY. ALL (3) SEATS ROCKED BACK AND FORTH DURING THE FLIGHT. THIS ROW OF SEATS MAY NOT WITHSTAND A HARD LANDING OR IMPACT IN IT'S CURRENT CONDITION.

EE4Y100335	BOEING	FLOORBEAM	CORRODED
8/13/2010	7372X6C		ZONE 200

UPPER FUSELAGE, FLOORBEAM LOWER FLANGE WITH CORROSION AT STA 867 BETWEEN RBL 26 AND RBL 56. THE CORROSION REQUIRES A MAJOR REPAIR.

EE4Y100263	BOEING	SKIN	CRACKED
8/5/2010	7372X6C		BS 308 S18R

LOWER FUSELAGE, SKIN CRACKED AT BS 308 BELOW STRINGER 18RT. THE CRACK REQUIRES A MAJOR REPAIR.

WGFY2010FA0751010	BOEING	FORMER	CRACKED
7/24/2010	747228F		ZONE 400

PYLON NR 1INTERNAL NS 270.00 UPPER LT SIDE FORMER CRACKED.

WGFY2010FA0751011	BOEING	FORMER	CRACKED
7/24/2010	747228F		ZONE 400

PYLON NR 1 INTERNAL NS 270.00 UPPER RT SIDE FORMER CRACKED.

WGFY2010FA0751001	BOEING	STIFFENER	CRACKED
7/19/2010	747228F		ZONE 400

PYLON NR 1 STIFFENER NR3, STA 243 & 248 WAS CRACKED.

WGFY2010FA0751007	BOEING	STIFFENER	CORRODED

7/22/2010	747228F		65B1508578	BS 1480

AFT WHEEL WELL BULKHEAD STIFFENERS CORROSION AT BS 1480, WL 156.

WGFY2010FA0751005	BOEING		STIFFENER	CORRODED
7/22/2010	747228F		65B15085393	ZONE 100

AFT WHEEL WELL BULKHEAD STIFFNERS CORROSION AT BS 1480, WL 176.

WGFY2010FA0751006	BOEING	GE	STIFFENER	CORRODED
7/22/2010	747228F	CF650*	65B1508534	WW BULKHEAD

AFT WHEEL WELL BULKHEAD STIFFENERS CORROSION AT BS 1480, WL 166.

WGFY2010FA0751008	BOEING	GE	FORMER	CRACKED
7/24/2010	747228F	CF650*		ZONE 400

STRUT NR 4 NS270.00 LT SIDE UPPER FORMER WAS CRACK.

WGFY2010FA0751009	BOEING	GE	FORMER	CRACKED
7/24/2010	747228F	CF650*		ZONE 400

STRUT NR 4 NAC 270.00 RT SIDE UPPER FORMER WAS CRACK.

WGFY2010FA0751002	BOEING	GE	STRAP	CRACKED
7/19/2010	747228F	CF650*		ZONE 400

PYLON NR1, STA 248.00 STRAP WAS CRACKED.

WGFY2010FA0751003	BOEING	GE	STIFFENER	CRACKED
7/19/2010	747228F	CF650*		NR 2 PYLON

PYLON NR 2 STIFFENER NR 3 AND STRAP, STA 248 WAS CRACKED.

WGFY2010FA0751004	BOEING	GE	STIFFENER	CRACKED
7/19/2010	747228F	CF650*		ZONE 400

PYLON NR2 STRAP STA 250 BETWEEN STIFFENER NR 2 & STIFFENER NR 3 WAS CRACKED.

VGQY2010081000066	BOEING		BULKHEAD	CRACKED
8/10/2010	7472L5B			NR 4 PYLON

NR 4 PYLON INTERIOR - DET FOUND CRACKS ON BOTH I/B AND O/B SIDE OF AFT MOUNT BULKHEAD FWD AREA UPPER CHORD AT NAC STA 270.

2010FA0000821	BOEING	MOOG	HOUSING	CRACKED
8/12/2010	757		33217771	FLIGHT SPOILER

DURING NDT INSPECTION IT WAS NOTED THAT THE BLOCKING AND RELIEF VALVE HOUSING IS CRACKED. THE HSG IS BLUE AND HAS THE PN 3321777-1 ON IT. THAT MEANS THAT IT IS IN COMPLIANCE WITH THE AD BUT IT STILL CRACKED. THIS IS THE EXACT SAME FAILURE MODE OF THE SAME COMPONENT THAT WAS REPLACED IAW AD.

2010F00189	BOEING	MOOG	HOUSING	CRACKED
8/12/2010	757*		33217771	FLIGHT SPOILER

DURING NDT INSPECTION IT WAS NOTED THAT THE BLOCKING AND RELIEF VALVE HOUSING IS CRACKED. THE HSG IS BLUE AND HAS THE PN 3321777-1 ON IT. THAT MEANS THAT IT IS IN COMPLIANCE WITH THE AD BUT IT STILL CRACKED.

AALA20100428JFK01	BOEING		MODULE	INOPERATIVE
4/28/2010	757223			CABIN

EMERGENCY LIGHTS FROM SEAT ROW 11 TO 25 FAILED TO TEST. REPLACED MODULE FOR EMERGENCY LIGHTS FROM SEAT ROW 11 TO 25.

ABXR201072000023A	BOEING		CHECK VALVE	CRACKED
9/16/2008	767223		77385619	NR 1 ENGINE

(ABXR) DURING A MX INSP EVENT, WHILE DOING AN INSP OF THE NR 1 ENG 8TH STAGE CHECK VALVE IAW AD 90-12-02 IAW SB 36-2078, REV 2, FOUND APPROX A 1 INCH CRACK IN THE CONE SEAT AREA. R & R THE VALVE IAW MM.

ABXR0210072000024	BOEING	GE	PANEL	BROKEN
1/5/2010	767223	CF680A	114T2400320	ZONE 600

(ABXR) DURING A MX INSP EVENT, FOUND PANEL 621ZB , RT L/E HAD (2) DOUBLERS BROKEN AND MISSING. REMOVED (2) DOUBLERS ON PANEL 621ZB IAW DWG 114T2400.

ABXR2010072000025	BOEING	GE	MOUNT	CORRODED
2/19/2010	767223	CF680A	310T10203	NR 1 ENGINE

DURING A MX INSP EVENT, FOUND NR 1 AFT ENGINE MOUNT HAD AREAS OF CORROSION WHERE MOUNT ATTACHED TO THE ENGINE. R & R NR1 ENGINE AFT MOUNT AND MOUNT BOLTS IAW MM.

2010FA0000737	BOMBDR		ROTOR BAND	FAILED
6/6/2010	DHC8400		61310004	GENERATOR

(HZ3R) GENERATOR ROTOR BAND FAILURE. BAND FAILED AT WELD, CAUSE IS UNDETERMINED FOR WELD FAILURE. OEM ENGINEERING FACILITATED INVESTIGATION. PENDING OEM ENGINEERING RECOMMENDATION

2010FA0000776	CASA	GARRTT	ATTACH BRACKET	CRACKED
8/3/2010	C212CC	TPE33110R	13410021	ZONE 600

DURING A ROUTINE CORROSION INSP, A MX FOUND A CRACK IN THE CTR WING LOWER ATTACH FITTING FRON THE FWD BOLT HOLE TO THE END OF THE FITTING, MX REMOVED THE OUTER WING FROM THE CTR WING AND PERFORMED NDT INSP ON ALL ATTACH FITTINGS. DURING THE NDT THE OUTER WING UPPER AND LOWER ATTACH BRACKETS WERE FOUND CRACKED, THE CRACKS STARTING FROM BOLTS HOLES AND MOVING FWD. MX REPLACED ALL 3 FITTING IAW THE MFG INSTRUCTIONS.

2010FA0000783	CESSNA	LYC	SCREW	BACKED OUT
7/20/2010	172P	O320*		IDLE MIXTURE

ENGINE QUIT ON FINAL APPROACH WHEN PILOT PULLED THROTTLE BACK. SUBSEQUENT INSP FOUND CARB IDLE MIXTURE SCREW BACKED OUT.

2010FA0000787	CESSNA	CONT	CYLINDER	CRACKED
7/2/2010	207A	IO520F	SA52006A1	ENGINE

UPON ENGINE DISMANTLE OR OVERHAUL, 5 OUT OF 6 CYLINDERS HAD CRACKED CYLINDER HEADS. THE CRACKS ORIGINATED AT THE LOWER SPARK PLUG HOLE AND RADIATED OUT AT THE 4 O`CLOCK POSITION FOR APPROX 1 INCH. AFFECTED SN: NR 1- 526-A08-6899. NOTE: THIS INFO WAS SUBMITTED BY AN UNKNOWN PERSON TO THE FSDO. NO OTHER INFO AVAILABLE.

2010FA0000788	CESSNA	CONT	CYLINDER	CRACKED
7/2/2010	207A	IO520F	SA52006A1	ENGINE

UPON ENGINE DISMANTLE OR OVERHAUL, 5 OUT OF 6 CYLINDERS HAD CRACKED CYLINDER HEADS. THE CRACKS ORIGINATED AT THE LOWER SPARK PLUG HOLE AND RADIATED OUT AT THE 4 O`CLOCK POSITION FOR APPROX 1 INCH. AFFECTED SN: NR 2- 526-A08-6901. NOTE: THIS INFO WAS SUBMITTED BY AN UNKNOWN PERSON TO THE FSDO. NO OTHER INFO AVAILABLE.

2010FA0000789	CESSNA	CONT	CYLINDER	CRACKED

7/2/2010	207A	IO520F	SA52006A1	ENGINE

UPON ENGINE DISMANTLE OR OVERHAUL, 5 OUT OF 6 CYLINDERS HAD CRACKED CYLINDER HEADS. THE CRACKS ORIGINATED AT THE LOWER SPARK PLUG HOLE AND RADIATED OUT AT THE 4 O`CLOCK POSITION FOR APPROX 1 INCH. AFFECTED SN: NR 3- 526-A08-6894. NOTE: THIS INFO WAS SUBMITTED BY AN UNKNOWN PERSON TO THE FSDO. NO OTHER INFO AVAILABLE.

2010FA0000791	CESSNA	CONT	CYLINDER	CRACKED
7/2/2010	207A	IO520F	SA52006A1	ENGINE

UPON ENGINE DISMANTLE FOR O/H, 5 OUT OF 6 CYLINDERS HAD CRACKED CYLINDER HEADS. THE CRACKS ORIGINATED AT THE LOWER SPARK PLUG HOLE AND RADIATED OUT A THE 4 O`CLOCK POSITION FOR APPROX 1 INCH. AFFECTED SN: 4/ 526-A08-6893. NOTE: THIS INFO WAS SUBMITTED BY AN UNKNOWN PERSON TO THE AL03 FSDO. NO OTHER INFO AVAILABLE.

2010FA0000792	CESSNA	CONT	CYLINDER	CRACKED
7/2/2010	207A	IO520F	SA52006A1	ENGINE

UPON ENGINE DISMANTLE OR OVERHAUL, 5 OUT OF 6 CYLINDERS HAD CRACKED CYLINDER HEADS. THE CRACKS ORIGINATED AT THE LOWER SPARK PLUG HOLE AND RADIATED OUT AT THE 4 O`CLOCK POSITION FOR APPROX 1 INCH. AFFECTED SN: NR 5/ 526-A08-686889. NOTE: THIS INFO WAS SUBMITTED BY AN UNKNOWN PERSON TO THE FSDO. NO OTHER INFO AVAILABLE.

2010FA0000767	CESSNA	CONT	FITTING	LEAKING
7/27/2010	210N	IO520*		OIL SYSTEM

PILOT DEPARTED AROUND 9:30AM. EVERYTHING ON PREFLIGHT AND RUN-UP WAS IN THE GREEN INCLUDING OIL PRESSURE. AFTER TURNING ON COURSE ABOUT 20 OR SO MILES FROM AT 6,000FT, HE NOTICED THE OIL PRESSURE STARTING TO FADE OFF. AFTER SOME INITIAL TROUBLESHOOTING HE MADE THE DECISION TO RETURN TO DEPARTURE. THE REASON TO DIVERT WAS BECAUSE THERE WAS NO INDICATION BY THE OIL TEMP AND THE ACFT WAS LOSING OIL PRESSURE. OIL STARTS SEEPING INTO THE COCKPIT ON THE PASSENGER SIDE. AT THIS TIME, THE PILOT TOLD APPROACH THAT HE NEEDED TO LAND. THE ENGINE NEVER SHOWED ANY SIGN THAT IT WAS WITHOUT INCIDENT. THE OIL PRESSURE LINE CONNECTS TO THE FIREWALL OIL FITTING TO THE OIL PRESSURE GAUGE HAD A SMALL HOLE AND CORROSION AT THE FIRST BEND RADIUS ON THE OIL PRESSURE GAUGE SIDE. OVER TIME THE LINE HARDENS, BECOMES LESS FLEXIBLE, AND SUBJECT TO CORROSION. WHEN REPAIRS ARE BEING MADE BEHIND THE INSTRUMENT PANEL, THE OIL PRESSURE LINE ASSY DUE TO RESTRICTED SPACE MOVES AND OR DEVELOP STRESS.

2010FA0000829	CESSNA	CONT	TUBE	CHAFED
7/20/2010	340CESSNA	TSIO520*	560010711	OIL SYSTEM

RAN ENGINE UP TO CHECK MAG DROP AND ENGINE OIL WAS OBSERVED TO BE DRIPPING OUT OF PORT SIDE WING ROOT. REMOVE INSP PLATES AND FOUND THAT THE .2500" ALUMINUM TUBING (PN 5600107-11) WAS ROUTED OVER THE TOP OF THE 3" SCAT TUBING. THE WIRE IN THE SCAT TUBING HAD CHAFFED A HOLE IN THIS .2500" ALUMINUM OIL PRESSURE LINE THAT RUNS FROM THE ENGINE TO THE COCKPIT. INSPECTED STARBORD INSTALLATION AND WAS ROUTED SAME WAY. IT WAS ROUTED TO PREVENT CHAFING.

FCPR201000233	CESSNA	CONT	SCREW	WORN
7/27/2010	411A	TSIO520*	A3205	PROPELLER

FOUND LOW PITCH OUT OF SPECIFICATION, UPON DISASSEMBLY OF DOME FOUND LATCH SCREW HAD BACKED OUT 5 TURNS. LOCKING PORTION OF SCREW WAS WORN AND NOT EFFECTIVE.

2010FA0000736	CESSNA	CONT	INDICATOR	CRACKED
6/28/2010	414A	TSIO520*		GYRO

(XR0R) GLASS BEZEL CRACKED DURING FLIGHT. APPEARS THAT THE GLASS BEZEL WAS NOT INSTALLED CORRECTLY. THIS UNIT HAD 6 MONTHS, 47.1 HOURS SINCE O/H. WOULD NOT WARRANTY, DID NOT INSTALL THE GLASS.

2010FA0000769	CESSNA		TRUNNION	CRACKED

7/28/2010	421C		51411036	ZONE 700

TRUNNION TUBE WAS FOUND TO BE CRACKED AT ACTUATOR ATTACH BRACKET.

YN8R11136	CESSNA		MASTER SWITCH	DEFECTIVE
8/11/2010	425		CM358950	AVIONICS

AVIONICS MASTER SWITCH WAS FOUND INOP UPON FUNCTIONAL CHECK. PART HAS BEEN RED TAGGED AND REPLACED WITH NEW SWITCH. PART WAS DISASSEMBLED AND UPON FURTHER INSPECTION APPEARS TO HAVE A MFG DEFECT.

2010FA0000734	CESSNA	PWA	LINE	LEAKING
7/12/2010	501	JT15D1A	3023398	FUEL SYSTEM

(EBVR) TROUBLESHOOT AND REPAIR FUEL LEAKING FROM BOTTOM OF NR 1 ENGINE BY THE FUEL CONTROL UNIT/ FUEL PUMP. TROUBLESHOT FUEL LEAK TO A CRACKED FUEL LINE. REMOVED EXISTING LINE AND INSTALLED O/H LINE. TORQUED AND SAFETIED.

2010F00137	CESSNA		SQUAT SWITCH	DAMAGED
7/1/2010	525A		622EN186	MLG

(EBVR) PILOT REPORTED GEAR RETRACTION SEQUENCE COULD NOT BE COMPLETED. UPON RETURN TO MX FACILITY, IT WAS OBSERVED THAT THE ROLLER WHEEL AND ASSOC HARDWARE ON THE RT MLG SQUAT SWITCH WERE MISSING.

2010FA0000782	CESSNA		SEAT	BROKEN
7/16/2010	550		55190921	

(GVRR) UPPER SEAT BASE ASSY CRACKED AT CHAIR BACK ATTACH POINTS. STRESS ON CHAIR BACK AND METAL FATIGUE PROBABLE CAUSE. ALSO, PREVIOUS INAPPROPRIATE REPAIR. CHAIR WAS REPAIRED IAW STC ST01042WI.

2010FA0000749	CESSNA		CONTROL CABLE	FRAYED
7/12/2010	560XL			ELEVATOR TRIM

(EBVR) CUSTOMER NOTICED ANOMALY IN "FEEL" OF ELEVATOR TRIM. INSP SHOWED (1) ELEVATOR TRIM CABLE FRAYED WITH NUMEROUS BROKEN STRANDS. FRAYED AREA WAS FOUND IN THE AREA OF FS 591, WHERE CABLE EXITS VERTICAL STAB AND ROUTES INTOR HORIZ STAB. CUSTOMER REPLACED CABLE. THIS CABLE HAD BEEN INSPECTED IN DEC 2009 IAW THE MFG INSP DOC 9 INSP. THE MX FACILITY W/O DOES NOT INDICATE THAT ANY DEFECTS WERE NOTED WITH THE CABLE DURING THE INSP. CUSTOMER REPORTS ACFT FLEW ABOUT 300 HOURS BETWEEN DEC 2009 AND JULY 2010. TO DATE IT HAS NOT BEEN DETERMINED IF THE FRAYED CABLE WAS THE OLD PN 6660001-33 OR NEW (POST ASL560XL-27-15) PN 6660003-35.

2010FA0000784	CESSNA	PWA	FCU	MALFUNCTIONED
7/12/2010	560XL	PW545A	8237002	RT ENGINE

WHILE DESCENDING INTO THE BASE AIRPORT, THE NR 2 ENGINE WOULD NOT ROLL BACK TO IDLE WHEN THE THROTTLE WAS CLOSED. THE THROTTLE APPEARED TO HAVE NO AUTHORITY OVER THE ENGINE AT THAT POINT. A SLOW ACCELERATION OF THE NR 2 ENGINE FORCED THE CREW TO SHUT IT DOWN. REPAIR STATION WAS CALLED AND ACCESSED THE PROBLEM. THEY DECIDED TO R & R FCU. AFTER THE FCU WAS R & R, A RUN-UP OF THE ENGINE VERIFIED THAT THE FCU WAS THE PROBLEM. ACFT WAS RETURNED TO SERVICE.

2010FA0000756	CESSNA	CONT	CHECK VALVE	FAILED
7/17/2010	T210M	TSIO520R	98510441	TURBOCHARGER

P/N S2361-1, LOT 60507, OIL CHECK VALVE FROM TURBOCHARGER, INSTALLED NEW ON 12 APRIL 2010, 60 HOURS IN SERVICE PRIOR TO FAILURE. RECEIVED "LOW OIL PRESSURE" ALERT FROM AURACLE 2100 SYSTEM, IMMEDIATELY TURNED TO NEAREST AIRPORT (KDTS) AND MADE EMERGENCY LANDING. 4 QTS (OF 9) REMAINING IN ENGINE SUMP AFTER LANDING. CHECK VALVE FRACTURED AT CONNECTION TO TURBO OIL RETURN TUBE. REPAIRS BEING PERFORMED, CHECK VALVE INSTALLED, DURING O/H OF TURBO UNIT MARCH 2010, WO 29770. THIS VALVE WAS NOT REPLACED AT THE O/H OF THE TURBOCHARGER, MARCH 2010.

2010FA0000758	CIRRUS	CONT	WIRE	CHAFED
11/7/2008	SR20	IO360*	CSAV661	

(NU7R) PILOT REPORTED AVIONICS INTERMITTENT TO COME ON WITH AVIONICS SWITCH. MFG DWG PAGE 24-50-01, PAGE 1 SHOWS AVIONICS RELAY NR 1 WITH WIRE CSVA661-14 LEAVING THE RELAY GOING TO THE AVIONICS ESSENTIAL BUSS. THIS WIRE WAS CHAFING ON THE BOTTOM HINGE ATTACH SCREW THAT WAS PROTRUDING FROM THE NUT PLATE. THIS HINGE HOLDS THE CIRCUIT BREAKER PANEL TO THE BOTTOM OF THE CENTER CONSOLE NEXT TO THE PILOTS RT LEG. WIRE CSVA661-14 WAS MFG TOO LONG OR THERE WAS NOT PROTECTION INSTALLED ON THE SCREW FASTENER TO PREVENT CHAFING. ANOTHER FIX WOULD BE TO MOVE THE AVIONICS RELAY NR 1 AND NR 2 WITH EACH OTHER, MAKING THE NR 1 RELAY AN NON-ESSENTIAL CIRCUIT AND NR 2 THE ESSENTIAL CIRCUIT. IF THE SCREW WERE TO CHAFE AGAIN AT LEAST IT WOULD NOT KNOCK OUT THE ESSENTIAL SYSTEM.

2010FA0000781	COLUMB	CONT	ACTUATOR	SHORTED
8/6/2010	LC40550FG300	TSIO550C	LA55273700	ZONE 300

ACFT PARKED DURING HEAVY RAIN. PILOT WENT TO SET TRIM TO NEUTRAL PRIOR TO TAKEOFF. TRIM INDICATOR INDICATED TAKEOFF POSITION AND TAB WAS ACTUALLY AT FULL NOSE DOWN POSITION. UPON TAKEOFF AND DURING CLIMB OUT PILOT EXPERIENCED HEAVY NOSE DOWN CONDITION AND A PITCH TRIM INDICATOR JUMPING AROUND, WHICH HE MISTAKENLY INTERPRETED AS A TRIM RUNAWAY. TRIM TAB FORCE WAS OVERCOME BY HAND UNTIL LEVEL ALTITUDE WAS ESTABLISHED AND THE TAB WAS ELECTRICALLY TRIMMED TO RELIEVE THE LOAD. THE PROBLEM WAS DIAGNOSED TO WATER ENTERING EITHER THE PITCH TRIM SERVO OR CONNECTOR AND MAKING THE INDICATOR READ INCORRECTLY AT FIRST AND THEN ERRATICALLY. THE PROBLEM COULD NOT BE REPRODUCED AFTER DRYING OUT.

2010FA0000778	CVAC	ALLSN	UNKNOWN	ODOR
8/3/2010	580	501D13D		COCKPIT

FLIGHT CREW NOTICED ELECTRICAL SMELL, RETURNED TO BASE. MX INSPECTED CTR CONSOLE AREA. COULD NOT DUPLICATE MALFUNCTION. PERFORMED OPS CHECK OF AFCS, FMS, WX RADAR, RTU, EFIS AND NAV SYSTEMS. NO DEFECTS NOTED. NO SMOKE OR BURNING SMELL NOTED. OPS CK GOOD IAW CV580.2-1, CHAP 22,23 & 24.

KGBR2010072300003	CVAC	WRIGHT	ROD BEARING	FAILED
7/22/2010	PB4Y2	R260035		NR 2 ENGINE

(KGBR) AFTER TAKEOFF AND UPON CLIMB TO ALTIUDE, THE NR 2 ENGINE OIL PRESSURE DROPPED RAPIDLY AND THE ENGINE OIL TEMPATURE INCREASED RAPIDLY. THE FLIGHT CREW IMMEDIATELY SHUTDOWN THE ENGINE AND RETURNED TO THE AIRPORT. UPON INVESTIGATION BY THE MX CREW, IT IS SUSPECTED THE MASTER ROD BEARING HAS FAILED.

V0XR201007150001	DHAV	SHROUD	CRACKED
7/15/2010	DHC8102	85410893106	LT EXHAUST

(V0XR) LT EXHAUST SHROUD HAS A CRACK IN THE INBD/AFT FASTENER BRACKET. R & R LT EXHAUST SHROUD.

V0XR201007200003	DHAV	BRACKET	CORRODED
7/20/2010	DHC8102	85711423001	ZONE 500

(V0XR) MOUNTING BRACKET ASSY FOR SECONDARY FLAP DRIVE CABLE COUPLING IS CRACKED. R & R MOUNT BRACKET. W/C 2338

2010FA0000820	DIAMON	STRUCTURE	WORN
6/11/2010	DA20C1		RT WING

DURING ANNUAL INSP, DISCOVERED EXCESSIVE FORE AND AFT PLAY IN RT WING, PN 22-5708-00-00-WIP. MX RECORD REVIEW INDICATED THAT THE RT WING WAS REPLACED ON 4/25/09. DISCOVERED SPAR, MAIN BOLT, BUSHING, PN 20-2700-01-20 WAS TON INSTALLED WITH NEW WING. THE ACFT FLEW FROM 4/25/09 TO 6/11/10 FOR A TOTAL OF 308.4 FLIGHT HOURS WITH SPAR, MAIN BOLT, BUSHING MISSING AND IS CONSIDERED BY THIS INSPECTOR TO BE A FLIGHT SAFETY CRITICAL ISSUE. REVIEW OF MM INSTALLATION PROCEDURES DID NOT INCLUDE ADDITIONAL INSTRUCTIONS FOR INSTALLING THE SPAR, MAIN BOLT WHEN INSTALLING A NEW WING.

SUSPECT THAT GMM MX INSTRUCTIONS FOR REMOVAL AND REPLACEMENT OF THE WING WERE WRITTEN FOR REMOVAL AND REPLACEMENT OF AN EXISTING WING ONLY. RECOMMEND THAT THE SPECIAL INSTRUCTIONS FOR INSTALLING A BUSHING FOR THE SPAR, MAIN BOLT WITH A NEW WING BE INCLUDED IN THE GMM.

U43R2010AF0000196	DIAMON	LYC	HEAT EXCHANGER	BROKEN
8/10/2010	DA40	IO360M1A	41303	EXHAUST SYS

(U43R) DURING 100 HR INSP, THE TECH FOUND CRACKS IN THE CHAIN WELDS AT THE EXHAUST EXIT BALL AND THE HEAT EXCHANGER COVER. THE CRACKS START AT THE FINISH POINT OF THE WELDS THROUGH THE CTR OF EACH WELD, TO THE START POINT OF EACH WELD. REPAIR AND RETURNED THE ACFT TO SERVICE AFTER THE COMPLETION OF THE INSP.

2010FA0000780A	DIAMON	LYC	STARTER	FAILED
7/27/2010	DA40	IO360M1A	14924LS	ZONE 100

1ST FLIGHT OF THE DAY, CREW TRIED TO START THE AIRPLANE AND IT WOULD NOT START. REPLACED STARTER, AIRCRAFT WAS RETURNED TO SERVICE.

2010FA0000732	DIAMON	LYC	SENSOR	FAILED
7/6/2010	DA40	IO360M1A	APT151B100020A	MANIFOLD PRESS

INTIALLY ERRATIC, AND THEN CONCISTENTLY LOW MANIFOLD PRESSURE READINGS ON G1000 DURING AND AFTER FLIGHT. PROBLEM APPEARED ONLY AFTER SEVERAL MINUTES OF ENGINE OPERATION, AND APPEARS TO BE RELATED TO HEAT IN THE ENGINE COMPARTMENT WHERE THE SENSOR IS LOCATED.

U43R2010FA0000195	DIAMON	LYC	HOUSING	DAMAGED
7/24/2010	DA40	IO360M1A	D4171662030	ALT AIR VALVE

THE THREADS ON THE ALTERNATE AIR VALVE BODY WERE STRIPPED OUT COMPLETELY. THE CONTROL CABLE WAS NO LONGER ATTACHED TO THE VALVE BODY, AS A RESULT THE VALVE BODY WAS FREE TO ROTATE WITHOUT RESTRICTIONS. SO THE ENGINE COULD BE GETTING UNFILTERED AIR.

2010FA0000797	DIAMON	LYC	SLICK	ARM	LOOSE
7/15/2010	DA40	O360*		K3822	MAGNETO

DISTRIBUTOR ARM COMING LOOSE FORM THE GEAR. WHEN THE ARM COMES LOOSE, IT CAUSES WEAR ON THE ARM CTR AND AS THE CTR WEARS TO A LARGER DIAMETER HOLE, THE ARM FLIES OUT CLOSING THE GAP AND GRINDS INTO THE CONTACTS OF THE DISTRIBUTOR BLOCK. THE MAG RAN NORMAL AND WAS FOUND DURING AN INSPECTION.

2010FA0000793	DIAMON	LYC	SLICK	ARM	LOOSE
7/15/2010	DA40	O360A4M		K3822	MAGNETO

DISTRIBUTOR ARM COMING LOOSE FORM THE GEAR. WHEN THE ARM COMES LOOSE, IT CAUSES WEAR ON THE ARM CTR AND AS THE CTR WEARS TO A LARGER DIAMETER HOLE, THE ARM FLIES OUT CLOSING THE GAP AND GRINDS INTO THE CONTACTS OF THE DISTRIBUTOR BLOCK. THE MAG RAN NORMAL AND WAS FOUND DURING AN INSPECTION.

2010FA0000794	DIAMON	LYC	SLICK	ARM	LOOSE
7/7/2010	DA40	O360A4M		K3822	MAGNETO

DISTRIBUTOR ARM COMING LOOSE FORM THE GEAR. WHEN THE ARM COMES LOOSE, IT CAUSES WEAR ON THE ARM CTR AND AS THE CTR WEARS TO A LARGER DIAMETER HOLE, THE ARM FLIES OUT CLOSING THE GAP AND GRINDS INTO THE CONTACTS OF THE DISTRIBUTOR BLOCK. THE MAG RAN NORMAL AND WAS FOUND DURING AN INSPECTION.

2010FA0000795	DIAMON	LYC	SLICK	ARM	LOOSE
7/22/2010	DA40	O360A4M		K3822	MAGNETO

DISTRIBUTOR ARM COMING LOOSE FORM THE GEAR. WHEN THE ARM COMES LOOSE, IT CAUSES WEAR ON THE ARM CTR AND AS THE CTR WEARS TO A LARGER DIAMETER HOLE, THE ARM FLIES OUT CLOSING THE GAP AND

GRINDS INTO THE CONTACTS OF THE DISTRIBUTOR BLOCK. THE MAG RAN NORMAL AND WAS FOUND DURING AN INSPECTION.

2010FA0000796	DIAMON	LYC	SLICK	ARM	LOOSE
7/26/2010	DA40	O360A4M		K3822	MAGNETO

DISTRIBUTOR ARM COMING LOOSE FORM THE GEAR. WHEN THE ARM COMES LOOSE, IT CAUSES WEAR ON THE ARM CTR AND AS THE CTR WEARS TO A LARGER DIAMETER HOLE, THE ARM FLIES OUT CLOSING THE GAP AND GRINDS INTO THE CONTACTS OF THE DISTRIBUTOR BLOCK. THE MAG RAN NORMAL AND WAS FOUND DURING AN INSPECTION.

NX4R00002	DIAMON	CONTROL CABLE	WORN
7/15/2010	DA42	CA13190	RUDDER

DURING A ROUNTINE INSPECTION, THE RUDDER CABLE(LT.: P/N: CA1-3190) WAS FOUND WORN WITH BROKEN STRANDS WHERE IT EXITS THE TUBE (P/N-157727) ABOUT 2 INCHES FORWARD OF THE RUDDER BELLCRANK. THIS IS APPROXIMATELY ON THE RUDDER HINGE LINE. ONCE THE CABLE AS REMOVED ADDITION WEAR WAS FOUND 33 INCHES INSIDE THE TUBE. SINCE BOTH ENDS OF THE CABLE ARE SWAGED, THIS CABLE WOULD NEVER BE REMOVED TO INSPECT FOR THAT WAER MIDWAY IN THE PROTECTIVE TUBE.

NX4R0003	DIAMON	CABLE	FAILED
8/3/2010	DA42	CA13190	ZONE 100

(N3XR) ON OR ABOUT 15 JULY 2010, THIS REPAIR STATION RECEIVED INFORMATION FROM ANOTHER ACFT OPERATOR THAT SIGNIFICANT RUDDER CABLE WEAR THAT WAS FOUND WHERE THE RUDDER CABLE EXITS THE PROTECTIVE NYLON TUBING JUST BELOW THE RUDDER HINGE LINE. BASED ON THE TIME IN SERVICE (TIS) SUPPLIED BY THAT DA42 OPERATOR, A FLEET ACFT WITH EQUIVALENT TIME IN SERVICE WAS INSPECTED AND DID IN FACT HAVE SIMILAR CABLE WEAR AT THAT LOCATION. THE LT AND RT RUDDER CABLES WERE SCHEDULED TO BE REPLACED. DUE TO THE INSTALLATION, THE RUDDER CABLES MUST BE INSTALLED WITHOUT A FINISHED END AT THE AFT END OF THE CABLE. A SWAGED FITTING INSTALLATION MUST BE ACCOMPLISHED IAW AC 43.13-2B. THERE IS NO WAY TO TEST THE STRENGTH OF THE FINISHED SWAGED FITTING. THE FITTING AND SLEEVE WERE ASSEMBLED AND FABRICATED IAW INSTRUCTIONS OUTLINED IN THE ACFT MM AS WELL AS AC43.13-2B. THE FINISHED FITTING WAS COMPARED TO THE ORIGINAL FITTING AND FOUND TO BE VERY CLOSE IN APPEARANCE AND DIMENSION. AFTER APPROX 15.9 HOURS OF OPERATION, THE RT RUDDER CABLE FAILED AT THE AFT SWAGE. AN INVESTIGATION REVEALED THAT ALTHOUGH VERY SIMILAR IN DIMENSION AND APPEARANCE, THE REPLACEMENT SWAGE WAS SLIGHTLY LARGER IN SIZE. A GAUGE FOR MEASURING THE COMPLETED SWAGE HAD BEEN USED ON BOTH THE FACTORY SWAGE AS WELL AS THE REPLACEMENT SWAGE WITH THE SAME RESULTS. DUE TO THE CIRCUMSTANCES WHICH RESULTED IN A FAILED CABLE, SEVERAL PRECAUTIONS SHOULD BE CONSIDERED: A TEST CABLE SHOULD BE FABRICATED USING THE CORRECT CABLE MATERIAL, HARDWARE, TOOL AND GAUGE. THIS CABLE SHOULD BE TESTED BY A CERTIFIED AGENCY TO VERIFY THAT IT MEETS THE TENSION REQUIREMENTS FOR THAT INSTALLATION. SINCE THE TOLERANCE BETWEEN AN ACCEPTABLE AND UNACCEPTABLE SWAGE IS EXTREMELY PRECISE, ONLY A GAUGE OF EXACT TOLERANCE SHOULD BE USED. ALSO, A NUMERIC DIMENSION SHOULD BE OBTAINED FOR A PROPERLY COMPLETED SWAGE AND THAT DIMENSION SHOULD BE OBTAINED AFTER CRIMPING. ONLY A CALIBRATED ACCURATE VERNIER CALIPER SHOULD BE USED TO MEASURE THAT DIMENSION. SOME FORM OF SLIPPAGE INDICATOR SHOULD BE APPLIED TO THE FINISHED SWAGE SUCH AS TORQUE SEAL OR PAINT SO THAT ANY MOVEMENT CAN BE DETECTED DURING PREFLIGHT.

2010FA0000773	DOUG	PWA	IGNITION UNIT	GROUNDED
7/29/2010	DC3C	R1830*	VJR24BX	ENGINE

ENGINE ROLL DOWN JUST AFTER TAKE-OFF. AFTER LANDING, ENGINE WOULD ONLY START ON LT MAG. DETERMINED THAT THE IGNITION VIBRATOR WAS SHORTING RT MAG DUE TO AN INTERNAL FAILURE. ALSO FOUND LT AND RT MAGS P-LEADS GROUND FAULTING TOGETHER THROUGH AN IGNITION FILTER MOUNTED IN FIREWALL. SPECULATED THAT CAPACITORS (SPRAUGE 10283-64 & 1032364B) IN THE FILTER SUFFERED CORROSION AND MOISTURE CONTAMINATION TO PROVIDE ADDITIONAL GROUND TO BRING BOTH MAGS DOWN.

2010FA0000915	DOUG	SKIN	CORRODED
7/31/2010	DC862F		RWS 710-760

(SPUY) RT WING OTBD L/E OUTER SECTION LWR SKIN CORRODED (XFS 710.000-760.000).

2010FA0000918	DOUG	SKIN	CORRODED
7/31/2010	DC862F		BS 1558 L10L

(SPUY) FUSELAGE SKIN CORRODED AT STA FS 1558.000 L-10L.

2010FA0000909	DOUG	FRAME	CORRODED
7/31/2010	DC862F		BS 879 L24L

(SPUY) LT MLG WW - FRAME FITTING CORRODED AT STA FS 879.000 L-24.

2010FA0000911	DOUG	SKIN	CORRODED
7/31/2010	DC862F		LT ELEVATOR

(SPUY) LT HORZ STAB - ELEVATOR LWR SKIN CORRODED AT STA XE 195.313.149.000 AND 132.750.

2010FA0000919	DOUG	BEAM	CRACKED
7/31/2010	DC862F		BS 1606 L19R

(SPUY) NR80 ACCESS DOOR - BULKHEAD BEAM CRACKED 4" AT STA 1606.000 L-19 ON RBL-2: TO LBL 2".

2010FA0000913	DOUG	SKIN	CORRODED
7/31/2010	DC862F		RT WING

(SPUY) RT WING UPPER SKIN CORRODED AT AROUND STA XRS 74.889.

2010FA0000906	DOUG	SKIN	CORRODED
7/31/2010	DC862F		BS 1480 L11L

(SPUY) EXTERNAL FUSELAGE - LOWER SKIN PANEL BUTT SPLICE CORRODED AT STA 1480.000 L-11L.

2010FA0000914	DOUG	LONGERON	CORRODED
7/31/2010	DC862F		BS 1380-1400

(SPUY) AFT ACCY COMPT - L-23R INTERIOR CORRODED (STA 1380.000 - 1400.000).

2010FA0000916	DOUG	SKIN	DENTED
7/31/2010	DC862F		LT WING TE FLAP

(SPUY) LT WING OTBD FLAP UPPER SKIN DENTED (STA XF 238.00 - 304.000).

2010FA0000904	DOUG	HOOK	CRACKED
7/31/2010	DC862F		AFT PAX DOOR

(SPUY) AFT PAX DOOR- HOLD OPEN HOOKS (02EA) CRACKED 1", APPROX AT STA FS 1440.000L TO L-15L.

2010FA0000910	DOUG	ANGLE	CORRODED
7/31/2010	DC862F		VERT TO FUSE

(SPUY) EMPENAGE - VERTICAL STAB TO FUSELAGE LT JOINT ANGLE CORRODED AT STA 1640.382.

2010FA0000912	DOUG	CARGO TRACK	CORRODED
7/31/2010	DC862F		BS 372

(SPUY) MAIN CARGO COMPT NR 6 TRACK CORRODED AT STA 372.000.

2010FA0000917	DOUG	SKIN	CRACKED
7/31/2010	DC862F		RT WING

(SPUY) RT WING NR 4 STUB WING LWR SKIN CRACKED APPROX 1.5" (CORRECTING SOURCE DOCUMENT: INS-100R-5700).

2010FA0000907	DOUG		STRUCTURE	CORRODED
7/31/2010	DC862F			RT WING

(SPUY) RT WING INBD L/E OUTER SECTION UPPER PART CORRODED AT STA XW 257.000.

2010FA0000905	DOUG		SKIN	CORRODED
7/31/2010	DC862F			LT WING

(SPUY) LT WING - UPPER PANEL EXTERNAL SKIN CORRODED AT STA XRS 204.000 S-14.

EE4Y100286	DOUG		FRAME	DAMAGED
8/9/2010	DC915F			FUSELAGE

MAIN CARGO CABIN AT STA Y332 BETWEEN LONG 10 RT AND LONG 11 RT FRAME WITH DOUBLE HOLES.

2010FA0000728	ECLIPS		WARNING LIGHT	FALSE ACTIVATION
7/14/2010	ECLIPSEEA500			MLG

ON A DESCENT, AND AT APPROX 270 KEAS, BOTH MLG INDICATIONS INDICATED "UNSAFE" AND RECEIVED LANDING GEAR FAIL CAS. REDUCED AIRSPEED AND CAS MESSAGE DISAPPEARED. FURTHER INVESTIGATION SHOWED THAT ANY TIME A SMALL LOAD WAS PUT ON THE ACFT, LANDING GEAR FAIL CAS MESSAGE WOULD POST AND BOTH MLG INDICATED "UNSAFE." PREPARED THE EMERGENCY GEAR EXTENSION CHECKLIST, BUT AT THE LOWER AIRSPEEDS THE GEAR OPERATED AND LOCKED APPROPRIATELY, A NORMAL LANDING WAS MADE AND THE ACFT WAS PUT INTO MX. THIS ACFT ALSO HAD A SUBSTANTIAL AIRFRAME VIBRATION AT HIGHER AIRSPEEDS THAT MAY BE RELATED.

2010FA0000727	ECLIPS		DISPLAY	FAILED
2/5/2010	ECLIPSEEA500			COCKPIT

ON A VFR FLIGHT, AFTER AVIONICS UPGRADE TO AVIO NG V1.5, THE PILOT'S PFD FAILED ON A VFR APPROACH. CONTINUED THE LANDING, WHERE THE PFD WAS REPLACED.

V0XR201007200001	EMB		GUSSET	CORRODED
7/20/2010	EMB145LR		14526437001	ZONE 100

(V0XR) RT GUSSET 479.0, FRM 59 - 61 IS CORRODED BEYOND LIMITS. R & R RT GUSSET. W/C 2106

V0XR201007200002	EMB		GUSSET	CORRODED
7/20/2010	EMB145LR		14522226003	ZONE 100

(V0XR) GUSSET YO.O, FRM 59 - 61 IS CORRODED BEYOND LIMITS. R & R GUSSET. W/C 2108

V0XR201007290001	EMB		SEAT TRACK	CORRODED
7/29/2010	EMB145LR		14530658003	ZONE 100

SEAT TRACK AT CENTER FUSELAGE FR 30 - 35 CORRODED BEYOND LIMITS. R & R SEAT TRACK. W/C 2093

V0XR201007290002	EMB		SEAT TRACK	CORRODED
7/29/2010	EMB145LR		14530658005	ZONE 100

SEAT TRACK AT CTR FUSELAGE III FR 36-47 CORRODED BEYOND LIMITS. R & R SEAT TRACK. W/C 2094

V0XR201007280011	EMB	ALLSN	ATTACH BRACKET	CRACKED
7/28/2010	EMB145LR	AE3007A	14572167002	WING-BDY FAIRING

(V0XR) RT WING BODY FAIRING TOP ATTACHMENT BRACKET AT FR 49 IS CRACKED BEYOND LIMITS. R & R RT WING BODY FAIRING ANGLE. W/C 6008

2010FA0000759	GULSTM	PWC	CABLE	DAMAGED
7/14/2010	GVSPG550	PW306A	30B1454	FUEL S/O VALVE

(K5SR) WHILE PERFORMING A 500 HR/12 MONTH INSP ON THE LT ENGINE, DISCOVERED THE EMERGENCY FUEL SHUTOFF CABLE HAD UN-TWISTED AT THE CABLE END GOING FROM THE FUEL SHUTOFF VALVE. R & R WITH NEW CABLE ASSY. OPD CKD SATISFACTORY.

2010FA0000772	HUGHES		HUB	VIBRATION
7/28/2010	369E		369D21200503	MAIN ROTOR

PILOT EXPERIENCED IN FLIGHT STICK SHAKE AND UNUSUAL VIBRATION. MX SUSPECTS PROBLEM WITH DROOP RING AND FOLLOWERS ON MAIN ROTOR HUB ASSY.

2010FA0000822	HUGHES	ALLSN	ANTI-ICE VALVE	UNSECURE
5/5/2010	369HS	250C20B	23053192AL	ENGINE

THE INSTALLED ANTI-ICE VALVE (PN 23053192AL) POPPET SEAT RETAINING SCREW WAS NOT PROPERLY STAKED DURING THE MFG PROCESS AND AS A RESULT THE SCREW WAS INGESTED INTO THE TURBINE SECTION OF THE ENGINE AND DAMAGED THE NR 1, 2, 3 WHEELS, THE 1ST, 2ND AND 4TH STAGE NOZZLES BEYOND ACCEPTABLE LIMITS. AS A RESULT OF THE IMPACT DAMAGE TO THE NR1 WHEEL THE NR 8 BEARING WAS ALSO DAMAGED BEYOND ACCEPTABLE LIMITS. ALL DAMAGED PARTS HAD TO BE REPLACED. FORTUNATELY THIS DAMAGE WAS DISCOVERED DURING AN INSP AND THE ENGINE DID NOT COME APART IN FLIGHT.

2010FA0000815	LEAR	GARRTT	SWITCH	INTERMITTENT
8/5/2010	35LEAR	TFE731*	622EN5136	ZONE 600

CREW PERFORMED ALL PREFLIGHT FUNCTIONAL CHECKS OF ALL ACFT SYS. AT THAT TIME THE SPEED BRAKE/SPOILERON SYS WAS REPORTED BY CREW TO TEST NORMALLY. PAX LOADED AND CREW PREPARED FOR DEPARTURE. ON TAKEOFF ROLL "AIRSPEED WAS ALIVE". AT APPROX 80 KTS INDICATED AIRSPEED, MASTER CAUTION LIGHT ILLUMINATED AND FLASHING. VERIFIED THE "SPOILER" RED ANNUCIATOR WAS ILLUMINATED. IMMEDIATELY ABORTED TAKEOFF AND RETURNED WITH NO OTHER INCIDENT. TROUBLESHOT SYS, DETERMINED FAULT TO BE RT SPEED BRAKE/SPOILER DOWN & LOCKED POSITION INDICATOR SWITCH. REPAIRED IAW MM 27-60-07.

UVVR2010081300014	LEAR	GARRTT	SKIN	CORRODED
8/13/2010	45LEAR	TFE731*	45543000133739	LT NACELLE

(UVVR) EXTERIOR SURFACE OF SKINS ON LOWER ENGINE COWLINGS SHOW EVIDENCE OF CORROSION AROUND RIVET HEADS. PAINT IS BLISTERING.

2010FA0000830	LET	RIB	CRACKED
8/13/2010	L23SUPERBLAN		ZONE 600

CRACK FOUND NR3 RIB UPPER FLANGE, RT AND LT WING. CHRONIC PROBLEM.

2010FA0000757	LET	RIB	CRACKED
7/22/2010	L23SUPERBLAN		ZONE 500

DURING ROUTINE INSPECTION, (2) SMALL CRACKS WERE DISCOVERED ON RIB 3 UPPER FLANGE, LT WING. THIS IS THE SECOND RECENT OCCURRENCE.

2010FA0000770	LET	CONTROL CABLE	FRAYED
7/28/2010	L23SUPERBLAN	A740255N	RUDDER

FRAYED RUDDER CABLES, CHRONIC PROBLEM. SUPPOSED TO LAST 1000 HOURS, THIS SET FAILED AT 178.1 TIS.

2010FA0000805	LET	RIB	CRACKED
8/7/2010	L23SUPERBLAN		ZONE 500

DURING ROUTINE INSP 2 SMALL CRACKS DISCOVERED ON NR 3 RIB UPPER RIB FLANGE.

2010FA0000806	LET	RIB	CRACKED
8/7/2010	L23SUPERBLAN		ZONE 500

NR3 RIB UPPER RIB FLANG FOUND CRACKED, LT AND RT WING.

2010FA0000807	LET			RIB	CRACKED
8/7/2010	L23SUPERBLAN				WINGS

NR 3 WING RIB LT /RT WINGS UPPER RIB FLANGE FOUND CRACKED.

2010FA0000819	MOONEY	LYC		NUT	BACKED OUT
8/10/2010	M20B	O360A1D		STD1410	MAGNETO

RT MAGNETO SEPARATED FROM ENGINE. ATTACH NUTS COMPLETELY BACKED OFF AND MISSING. AFTER OIL DELPETION, MAIN CASE CRACKED ABOVE LT FRONT CYLINDER ATTACH AREA.

2010F00185	PIAGIO			WARNING LIGHT	ILLUMINATED
8/5/2010	P180				CARGO DOOR

BAGGAGE DOOR LIGHT ILLUMINATED DURING CLIMB, PILOT REFFERED TO QRH AND SECURED NR1 ENGINE, PLANE RETURNED TO FIELD WITHOUT INCIDENT, NO EMERGENCY WAS DECLARED.

2010FA0000738	PIAGIO	PWA		PROPELLER	MALFUNCTIONED
7/14/2010	P180	PT6*			LEFT

(V2JR) ON APPROACH, LT ENGINE PROP AUTOFEATHERED.

2010FA0000765	PIAGIO	PWA		WARNING LIGHT	INTERMITTENT
7/21/2010	P180	PT6A66			LT FIRE

LEFT FIRE LIGHT FLICKERED AT CLIMB POWER, NO MASTER CAUTION LIGHT, NO FURTHER INDICATIONS.

5APR577Y42	PILATS	PWA		BRAKE DISC	CRACKED
7/27/2010	PC1245	PT6A67B		244759C	ZONE 700

(5APR) DURING A LINE CHECK THE LT MAIN BRAKE OUTER DISC WAS DISCOVED TO BE CRACKED. REMOVED BOTH BRAKE AND WHEEL ASSEMBLIES AND INSTALLED BRAKE AND WHEEL CONVERSION STC SA01376CH IAW STC INSTRUCTIONS.

5APR577Y41	PILATS	PWA		FUEL CONTROL	FAILED
7/16/2010	PC1245	PT6A67B		311989207	ENGINE

DURING DESCENT, ENGINE POWER ROLLED BACK & NO RESPONSE WITH POWER CONTROL LEVER. CREW DECLARED AN EMERGENCY, PERFORMED EMERGENCY CHECKLISTS & ATTEMPTED TO UTILIZE MANUAL OVERRIDE LEVER (MOR) TO PROVIDE FUEL TO ENGINE. ITT INDICATION BEGAN TO RISE QUICKLY DUE TO LIMITED NG SPEED, CREW ELECTED TO STOW MANUAL OVERRIDE LEVER (MOR) & SECURE ENGINE. DIVERTED & MADE AN UNEVENTFUL LANDING WITH ENGINE SHUTDOWN. INITIAL TROUBLESHOOTING POINTS TOWARD AN INTERNAL FCU OR INTERNAL PROPELLER GOVERNOR ISSUE AS NO EXTERNAL P3 LEAKS WERE DETECTED. AFTER INSPECTING THE ENGINE MX ATTEMPTED TO START ENGINE & DETERMINED IT WOULD START BUT NOT ACCELERATE PAST MINIMUM FUEL FLOW. TROUBLE SHOOTING CONTINUED AND THE FUEL CONTROL UNIT WAS ULTIMATELY REPLACED. ENGINE STARTED & ACCELERATED NORMALLY.

5APR577Y40	PILATS	PWA		BRAKE DISC	CRACKED
7/15/2010	PC1245	PT6A67D		244759C	BRAKE ASSEMBLY

DURING A LINE CHECK DISCOVERED THE LT MAIN GEAR OUTER DISK CRACKED. R & R BRAKE ASSY IAW MM INSTRUCTIONS.

2010FA0000726	PIPER			U BOLT	FAILED
7/15/2010	PA25				MLG

DURING THE RELOCATION OF THE ACFT, THE RT MLG ATTACH "U" BOLT FAILED WITH A SUBSEQUENT GEAR COLLAPSE. THE "U" IS SPECIFIC TO THE SPRING STEEL GEAR INSTALLATION IAW STC SA441SW.

2010FA0000762	PIPER	LYC	SLICK	BEARING	WORN
7/6/2010	PA28161	O320D3G		K3822	MAGNETO

THE (2) BEARINGS THAT SUPPORT THE DISTRIBUTOR ROTOR GEAR (LARGE GEAR) WERE FOUND TO BE WORN OUT. A CONSIDERABLE AMOUNT OF BEARING MATERIAL WAS DEPOSITED THROUGHOUT THE DISTRIBUTOR HSG. ALSO, BECAUSE THE GEAR WAS ALLOWED TO MOVE WITHIN THE WORN BRG, OTHER PLASTIC MATERIAL WAS GROUND OFF FROM THE DIST BLOCK. AS A RESULT OF THE CONTAMINATION THE POINTS CAM WAS FOUND TO BE WORN DOWN AS WELL. THIS DAMAGE WAS DISCOVERED DURING THE SECOND 500 HR IMPULSE COUPLING AND MAG INSPECTION. THE PART WAS STILL FUNCTIONING WHEN THE PROBLEM WAS FOUND.

2010FA0000825	PIPER	LYC	SCREW	LOOSE
7/27/2010	PA28181	O360A4M		CARBURETOR

(DN8S) HAVE HAD (2) CARBURETORS DO THIS IN THE LAST 6 MONTHS. THE PUMP IDLER LEVER SCREW HAS COME LOOSE ON ITS OWN. IT USES A TABBED SAFETY GASKET AND TTHIS HAS NOT STOPPED IT FROM COMING LOOSE. WHEN THIS HAPPENS IT SIGNIFICANTLY AFFECTS THE ACFT`S PERFORMANCE. HAVE NARROWLY AVOIDED ACCIDENTS/ INCIDENTS.

2010FA0000790	PIPER	LYC	OIL COOLER	LEAKING
8/6/2010	PA28236	O540*	8000074	ZONE 400

THE FIRST UNIT THAT FAILED WAS AN O/H COOLER, PN 8000074, SN 1041411 MFG. 04/05, INSTALLED 12/01/09 AND FAILED ON 3/19/10. THE REPLACEMENT COOLER WAS NEW WITH SAME PN 8000074 AND SN 1041905 , MFG. 10/09, INSTALLED ON 3/25/10. THE FIRST WAS INSTALLED ON A FACTORY REBUILT ZERO TIME ENGINE. THIS UNIT FAILED AFTER 23.6 FLIGHT HOURS. THE SECOND, NEW COOLER, FAILED AFTER 30 MORE FLIGHT HOURS OR TOTAL ENGINE TIME OF 53 HOURS.

2010FA0000763	PIPER	BOLT	BROKEN
6/29/2010	PA28R201	NAS464P314	MLG

ON GEAR RETRACTION, GEAR UNSAFE LIGHT REMAINED ON WITH PUMP SHUTOFF. GEAR WAS EXTENDED AND LANDING ACCOMPLISHED WITHOUT INCIDENT. INSP SHOWED THAT THE BOLT ATTACHING THE NLG ACTUATOR TO THE AIRFRAME FITTING WAS BROKEN AND JAMMED IN PLACE AND THE AIRFRAME FITTING WAS BENT. BOLT AND FITTING WERE REPLACED AND OPS CHECKS PERFORMED WITH NO OTHER DEFECTS NOTED. RECOMMEND REPLACEMENT AT 2000 HRS.

2010FA0000731	PIPER	LYC	ROD END	WEAK
6/28/2010	PA28R201	IO360C1C6	8930700	PROP GOV

(UC2R) THE PILOT REPORTED THA THE PROP GOVEERNOR CONTROL WAS UNRESPONSIVE. THE TECH FOUND THE PROP GOVERNOR ROD END OFF OF THE GOVERNOR ATTACH BALL. THE SPRING SAFETY DEVICE HAD ROTATED AND ALLOWED THE ROD END TO POP OFF OF THE ATTACH BALL. THE ROD END WAY REPLACED AND THE ACFT WAS RETURNED TO SERVICE. WE WOULD RECOMMEND REPLACING THE ROD END PERIODICALLY AND POSSIBLY A BETTER DESIGNED ROD END SAFETY DEVICE.

X1AAA0502810	PIPER	HOOK	SLOW
7/16/2010	PA31350		MLG

LANDING GEAR FAILED TO RETRACT NORMALLY, PILOT ELECTED TO EXTEND THE GEAR AND RETURN TO THE AIRPORT. DURING EXTENSION THE RT MAIN GEAR DIDN'T SHOW DOWN AND LOCKED. PILOT PERFORMED EMERGENCY EXTENSION PROCEDURE, AND LANDED NORMALLY. IT WAS FOUND THE RT DOWNLOCK HOOK VERY SLOW TO LOCK. REMOVED DOWN LOCK HOOK BOLT CLEANED, REASSEMBLED. LANDING GEAR OPERATED NORMAL.

FCPR201000234	PIPER	ROD END BEARING	SEIZED
7/27/2010	PA31350	452860	LT MLG

LT MAIN GEAR DID NOT SHOW DOWN AND LOCKED, ACFT LANDED SAFELY. FOUND LOWER DOWN LOCK HOOK ROD END SEIZED NOT ALLOWING HOOK TO FULLY ENGAGE IN LOCKED POSITION.

ZB0R201000006	PIPER	CONTROLLER	FROZEN
8/2/2010	PA34200	555443	RT PROPELLER

(ZB0R) DURING PREFLIGHT RUNUP, PILOT FOUND RT PROPELLER CONTROL TO BE FROZEN - WOULD NOT OPERATE. ACFT REPORTED TO MX. REPLACED RT PROPELLER CONTROL, PN 555-443. OPS CK GOOD

2010FA0000760	PIPER	LYC	STRUCTURE	TORN
7/9/2010	PA44180	O360A1H		LT WING TIP

PILOT REPORTED THAT DURING FLIGHT, NOTICED THAT WING TIP OF LT WING WAS NOT LEVEL WITH WING. ACFT WAS LANDED AT CLOSEST AIRPORT. INSP REVEALED THAT LOWER WING TIP HAD SHEARED AWAY FROM ATTACHMENT SCREWS ON THE LOWER SECTION OF FIBERGLASS WING TIP, IN MY VIEW THIS FAILURE WAS DUE TO THE FACT THE ATTACH POINT SURFACE HAS (1) LAYER OF GLASS STRANDS AND THEY ARE IN A 90 DEGREE LAYOUT INSTEAD OF A 45 DEGREE LAYOUT. AS A RESULT, ONLY HALF THE GLASS STRANDS ARE STRUCTURAL.

2010FA0000809	PIPER	LYC	FITTING	CORRODED
7/29/2010	PA60601P	TIO540*		ZONE 100

OWNER STATED HE WAS CRUISING AT ALTITUDE, TAKING ON ICE, ACTIVATED THE DE-ICE BOOT FUNCTION AND THE ICE WAS NOT REMOVED FROM THE ACFT. AFTER MULTIPLE TRIES HE WAS FORCED TO MAKE A EMERGENCY DECENT TO MAINTAIN AIRSPEED AND TO REMOVE THE ICE IN WARMER TEMPS. THE FLIGHT CONTINUED TO THE SCHEDULED DESTINATION. ON A GROUND CHECK OF THE DE-ICE SYS THE BOOTS WERE NOT INFLATING. AFTER TROUBLESHOOTING THE COMPLETE SYS THE DEFECTIVE ITEM WAS FOUND. GAINING ACCESS TO THE DE-ICE COMPONENTS IN THE LT MAIN WHEEL WELL REMOVING THE AFT FUSELAGE ACCESS PANEL AND TRACING THE DE-ICE BOOT INFLATION/DEFLATION HOSES THERE IS A DISTRIBUTION TEE UNDER THE BELLY FUEL TANK AREA. THIS IS THE LOWEST PART IN THE SYS AND WATER/MOISTURE HAD COLLECTED THERE AND CAUSED THE ELBOW FITTING TO CORRODE AND A .2500" BY .5" PIECE OF THE TUBE TO BLOW OUT NOT ALLOWING THE PRESSURE TO INFLATE THE BOOTS OR VACUUM THE DOWN TO THE AIRFRAME FOR PROPER AIRFLOW OVER THE FLIGHT SURFACES. ALL THE FITTINGS WERE REPLACED IN THE TEE AND THE SYS OPERATED PROPERLY ON THE GROUND AND DURING A TEST FLIGHT.

E81RJW302972	RAYTHN	WILINT	POWER SUPPLY	FAILED
7/16/2010	390	FJ44	100020601	COCKPIT

PILOT NOTED "POPPING" NOISES FROM COCKPIT PEDESTAL AREA AT POST-FLT ELECTRICAL SYS SHUTDOWN, FOLLOWED BY SMOKE FROM PEDESTAL AREA. FOUND XL500/5 STANDBY POWER SUPPLY (HBC PN 390-384027-0001) TO INTERMITTENTLY OUTPUT 16-17 VDC AT 5VDC INSTRUMENT LIGHTING OUTPUT, BACKFEEDING HIGH VOLTAGE THROUGH LIGHTING CIRCUITS. FAILED POWER SUPPLY REPAIRED 11/23/2009 BY MFG FACILITY, WO RMA-019285 (FAA 8130-3 TRACKING NO. 4503062581). FOUND RUDDER TRIM L-R SWITCH 27S5 HEAT DAMAGED AND REPLACED. REPLACED LT & RT FUEL QUANTITY INDICATORS DUE TO FAILED INTERNAL LIGHTING. REPLACED XL500/5 STANDBY POWER SUPPLY WITH A REPAIRED POWER SUPPLY. RECOMMEND POWER SUPPLY MFG INVESTIGATE WHETHER AN ISOLATED FAILURE, OR IF POWER SUPPLY BENCH TESTING NEEDS TO BE REVISED. RECOMMEND MFG INVESTIGATE MODIFICATIONS TO POWER SUPPLY TO ADD 5VDC OUTPUT SYS PROTECTION TO PREVENT OUT OF TOLERANCE VOLTAGES BEING SENT OUT OF UNIT. RECOMMEND AIRFRAME MFG INVESTIGATE WHETHER ADDITIONAL INSTRUMENT LIGHTING CIRCUIT PROTECTION WARRANTED TO PREVENT SIMILAR OCCURENCES.

2010F00159	SKRSKY	GE	INSULATOR	WORN
7/12/2010	S61N	CT581402	351005	FIRE DETECTOR

THE NR 1 ENGINE FIRE LIGHT ILLUMNIATED IN FLIGHT. GROUND CHECKS WERE BEING PERFORMED FOR FIRE LIGHT ON PREVIOUS DAY. ACFT WAS IN HOVER WHEN LIGHT ILLUMINATED AFTER REPLACING FIRE LOOP ON PREVIOUS DAY. MX PERFORMED ADDITIONAL TROUBLESHOOTING AND DISCOVERED THE INSULATORS CONNECTING THE FIRE LOOPS WERE WORN ALLOWING A SHORT.

2010FA0000775	SOCATA	CALIPER	BINDING
8/2/2010	TB9CTAMPICO	3019A	LT BRAKE ASSY

DURING TAKEOFF, PILOT VEERED OFF RUN WAY, STRIKING A RUNWAY LIGHT. THE PILOT CLAIMED THAT THE LT BRAKE WAS DRAGGING, CONTRIBUTING TO THE INCIDENT. SUBSEQUENT REPORTS FROM MECHANIC, REVEALED THAT THE PISTON O-RING ON THE LT CALIPER, PN MS 28775-213, WAS FOUND PINCHED DURING DISASSEMBLY. INSP OF THIS AREA SHOULD INVOLVE CLOSE EXAMINATION OF FLUID LEAKAGE AND ABNORMAL PUCK/DISC WEAR.