U.S. Department of Transportation
Federal Aviation Administration

AFS-600
Regulatory Support Division

ADVISORY CIRCULAR

43-16A

AVIATION MAINTENANCE ALERTS

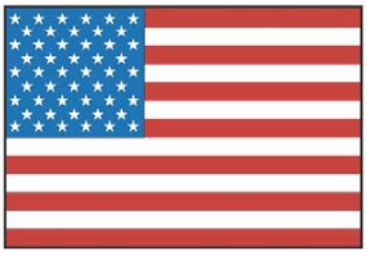

ALERT NUMBER 387

OCTOBER 2010

CONTENTS

AIRPLANES

BIRD 1
CASA 3
CESSNA 5
DOUGLAS 5
PIPER 6

HELICOPTERS

BELL 8

POWERPLANTS

CONTINENTAL 11

AIR NOTES

INTERNET SERVICE DIFFICULTY REPORTING (iSDR) WEB SITE 12
IF YOU WANT TO CONTACT US 13
AVIATION SERVICE DIFFICULTY REPORTS 13

U.S. DEPARTMENT OF TRANSPORTATION
FEDERAL AVIATION ADMINISTRATION
WASHINGTON, DC 20590

AVIATION MAINTENANCE ALERTS

The Aviation Maintenance Alerts provides the aviation community with an economical means to exchange service experiences and to assist the FAA in improving aeronautical product durability, reliability, and safety. We prepare this publication from information operators and maintenance personnel who maintain civil aeronautical products pertaining to significant events or items of interest. At the time we prepared this document, we have not fully evaluated the material. As we identify additional facts such as cause and corrective action, we may publish additional data in subsequent issues of the Alerts. This procedure gives Alerts' readers prompt notice of conditions reported to the FAA Service Difficulty Reporting System (SDRS). We welcome your participation, comments, and suggestions for improvement. Send to: FAA; ATTN: Aviation Data Systems Branch (AFS-620); P.O. Box 25082; Oklahoma City, OK 73125-5029.

(Editor's notes are provided for editorial clarification and enhancement within an article. They will always be recognized as italicized words bordered by parentheses.)

AIRPLANES

Bird: CK; Blocked Fuel Tank; ATA 2810

(Attached to the end of this report is a copy of the FAA Special Airworthiness Information Bulletin CE-09-23.)

An A&P mechanic writes, "This aircraft underwent full restoration; the original steel fuel tank was used which was in excellent condition. The tank was prepped, and Randolph sloshing compound was applied IAW the manufacturer's instructions. This tank was sloshed to seal any pin holes in the tank—common for its age and material. Ten months after being put back into service the aircraft had accumulated 6.0 hours since restoration with no abnormalities. Shortly after *(this next)* takeoff the engine quit—the pilot landed on the remaining part of the runway. This aircraft sustained major damage during the forced landing. Upon investigation with the FAA, the carburetor and gascolator screens *(were found to have)* small white/amber flakes. The fuel tank had a sump at the bottom of the tank similar in size to an aluminum Cessna Gascolator. Fittings were removed from the sump and a large amount of white/amber flakes were visible through the holes. The top of this fuel tank has a large access port; once removed the sides of the tank and the sump were *(both)* visible through the baffles. The sump was 75% full of flakes and large portions of the sloshing compound were missing from the sides of the tank. The size of the flakes varied from pencil lead to 2 or 3 inch diameter flakes. The aircraft had been serviced only with 100LL.

"In my opinion, I feel the engine quit due to fuel starvation from the tank sloshing compound breaking off in large quantities and blocking the outlets of the fuel tank. It is obvious the sealant is failing to adhere to the sides of the tank, regardless of the preparation techniques directed by the manufacturer. To prevent similar occurrences which could result in loss of life, I would recommend the following: 1) *(don't)* use any sort of fuel sloshing compound in any part of the fuel system. 2) Insure a finger strainer is installed in each outlet of each tank. 3) Remove any tank from service and replace if it has been treated. 4) Closely monitor the fuel screens and outlets if a tank has been treated with this product until replacement can occur. Piper Aircraft Service Bulletin 251D is a great reference to the use of Randolph Tank Sloshing Compound. Piper recommends removing and replacing a fuel tank that has been treated with this product."

FAA
Aircraft Certification Service

SPECIAL AIRWORTHINESS INFORMATION BULLETIN

SAIB: CE-09-23
Date: April 7, 2009

SUBJ: Fuel: Piper PA-28, PA-32, PA-34

This is information only. Recommendations aren't mandatory.

Introduction

This Special Airworthiness Information Bulletin (SAIB) alerts you, owners, or operators, of all serial numbers of Piper Aircraft, Inc. (Piper) PA-28, PA-32, and PA-34 series airplanes of an airworthiness concern and the potential for environmental deterioration of a sloshing material that was previously used to repair leaking fuel tanks. The sloshing compound can peel from the wall of the fuel tank and block the fuel tank outlet, which can starve the engine of fuel.

At this time, this airworthiness concern is not an unsafe condition that would warrant AD action under Title 14 of the Code of Federal Aviation Regulations (14 CFR) part 39.

Background

In May 2008, a Piper Model PA-32R-300 airplane made a forced landing in a field because of engine problems. The aircraft experienced substantial damage. The pilot was the only occupant and no injuries were reported. The probable cause for the engine power loss event in this event was determined to be fuel starvation due to a blocked left inboard fuel tank outlet. This blockage was due to contamination of the fuel tank caused by the sloshing compound peeling from the wall and covering the fuel outlet port.

The National Transportation Safety Board (NTSB) and further FAA investigation revealed the following details regarding the accident:

- The inboard fuel tank was observed having what appeared to be large sections of sloshing compound peeling from the tank walls resulting in a blockage to the left inboard fuel tank outlet.
- The aircraft records show the left inboard fuel tank was sloshed in February 1996, using Randolph 802 sealer per paragraph 8-5a of the Piper Service Manual.
- Piper Service Bulletin 251C, dated May 16, 2005, was issued to remove Randolph 802 as an approved sealer and stated that the sloshing procedure was to be removed from all Piper Service Manuals.

Piper released Service Bulletin 251D on February 24, 2009, to include a repetitive 100-hour inspection (corresponds with an annual inspection) for tanks that have been previously sloshed with the Randolph 802 sealer. If sloshing material is found to be flaking off from the interior of the tank, then replacement of the tank is recommended.

Recommendations

The purpose of this SAIB is to highlight the potential of engine fuel starvation from the environmental deterioration of a sloshing compound that was used in some PA-28, PA-32, and PA-34 Series aircraft as an approved repair procedure. As such, the FAA recommends compliance with the inspection procedures in Part I of Piper Service Bulletin 251D. If that inspection reveals that the fuel tank has been previously sloshed, the FAA recommends that the repetitive 100-hour/annual inspection of the fuel tank be incorporated into the aircraft maintenance program as outlined in Part II of Piper Service Bulletin 251D. Finally, if a leak develops, or if the sloshing compound is found to be

separating from the inner walls of the fuel tank, the FAA recommends replacement of the fuel tank per the procedures in Part III of Piper Service Bulletin 251D.

For Further Information Contact

Darby Mirocha, Aerospace Engineer, FAA, Central Region, Atlanta Aircraft Certification Office, One Crown Center, 1895 Phoenix Boulevard, Suite 450, Atlanta, GA 30349; phone (770)-703-6095; fax (770) 703-6097; email: darby.mirocha@faa.gov.

2

Part Total Time: 6.0 hours

CASA: C212CC; Cracked Horizontal Stabilizer Fitting; ATA 5551

About the following this submitter states, "*(This provides)* supplemental information to SDR number 2010FA0000729 *(see also July Alerts for discussion of same).* The sixth (of eight) airframe side horizontal stabilizer fittings was removed and found to be cracked." "This aircraft is going through a combined 1, 2, and 4 year corrosion inspection." *(Attach fitting P/N: 21224154XX.)*

Part Total Time: 16,761 hours

Cessna: 172M; Stuck Starter Contactor; ATA 8011

"The start contactor stuck in the closed position," says this A&P mechanic. "*(I)* would turn the master switch on and the starter motor would *(immediately)* engage. The master switch had to be turned off to stop the starter. This contactor was changed eight months ago for the same problem. Other makes of *(our)* aircraft have also had this problem in the past. This *(defect)* seems to coincide with the use of high torque starters, and it is very dangerous." *(Start Contactor P/N: 111-138D. Very dangerous, indeed! This can kill someone not wary of the possibility. The SDRS database reflects at least four of these contactor part numbers. Thanks for the admonition; good reminder for all—Ed.).*

Part Total Time: 144.0 hours

Cessna: 310; Failed Rod-end on Main Gear Lock Assembly; ATA 3230

An FAA inspector says, "A rod-end broke *(when the pilot)* attempted to extend the landing gear in flight...resulting in a gear up landing. Upon inspection of the rod-end, *(I)* found it had been cracked prior to the incident. A probable cause is fatigue failure due to the age of the component. I recommend this to be a time change requirement." *(Rod-end P/N: HM-4; Lock Assembly P/N: 0841000-58. There are five such failures noted in the SDRS database for the HM-4 P/N.)*

Part Total Time: 3,688.7 hours

Douglas: DC915F; Corroded Outflow Valve Doubler; ATA 5320

An unidentified submitter writes, "During an "A" check, maintenance found two rivets with missing heads forward of the Lavatory Service Door. Upon investigation, inspection found the Cabin Air Outflow Valve Doubler (Plate) corroded beyond limits at station 786; longeron 23L. Maintenance installed a new doubler IAW DC-9 Structural Repair manual 51-30-2. This included the replacement of the two rivets that were missing. The aircraft was returned to service. Reference SRM 53-30-0, page 11, item 30; and SRM 53-30-0, page 14, Item 30 for the location and detail of the doubler (plate). This item was found during an "A" check, but it is normally inspected as part of the CPCP program *(corrosion prevention)* which was not due at this time. This is not a Principal Structural Element (PSE)." *(Doubler P/N: 59145581. Note the SDRS database records 6 such P/N's.)*

Part Total Time:71,968.0 hours

Piper: PA31-350; Electrical Power Failure; ATA 2432

Another FAA inspector writes, "Loose battery cables led to a complete loss of electrical power while in flight—IFR flight level 13,000 feet. Loose cables (P/N 80009-04) caused the loss of the aircraft battery *(power)*. When the alternators were unable to carry the load, it resulted in a total electrical loss."

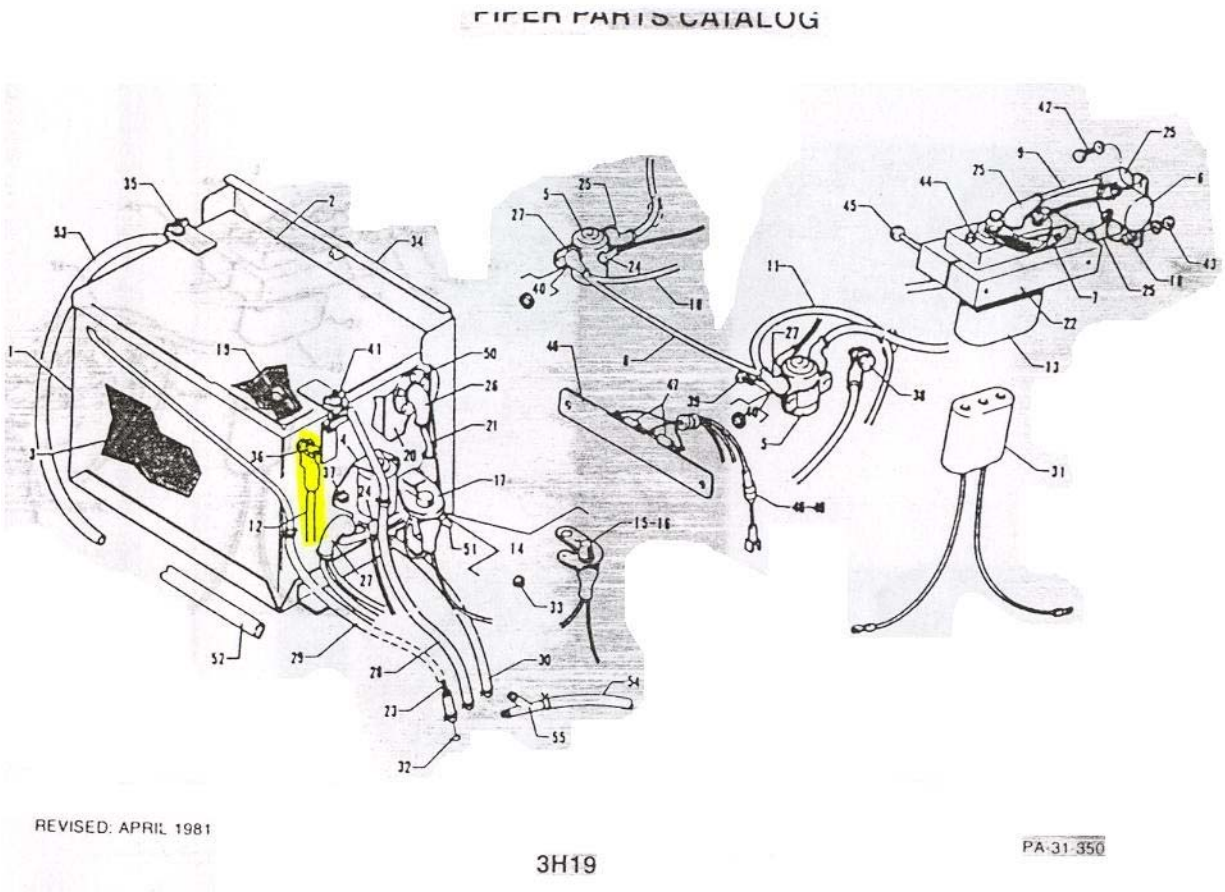

(Loss of electrical power at 13,000—and what else happened? Thanks for leaving me hanging. Rip the last two pages out of my book.... Anyway, this rotor blade has seven entries in the SDRS database—Ed.)

Part Total Time: (unknown)

HELICOPTERS

Bell: 430; Cracked Tail Rotor Blade; ATA 6410

A chief inspector for a repair station states, "This aircraft was flown to our facility and the operator reported '...debonding of the tail rotor blade leading edge—at the tip of the blade.' Upon further investigation of the blade, it was discovered that the root end of the blade had cracked and the skin was separated from the blade end. Photographs are included with this report. Information has also been submitted to Bell Helicopter Textron, product support engineering. Probable cause is unknown at this time. This aircraft is operated under Part 135 compliance." *(Tail rotor blade P/N: 222-016-001-131. Tail rotor hub and blade P/N: 222-012-701-125. Photos list as tip views 1-3, then root view 1. Quite dramatic; thanks for the photo effort—Ed.)*

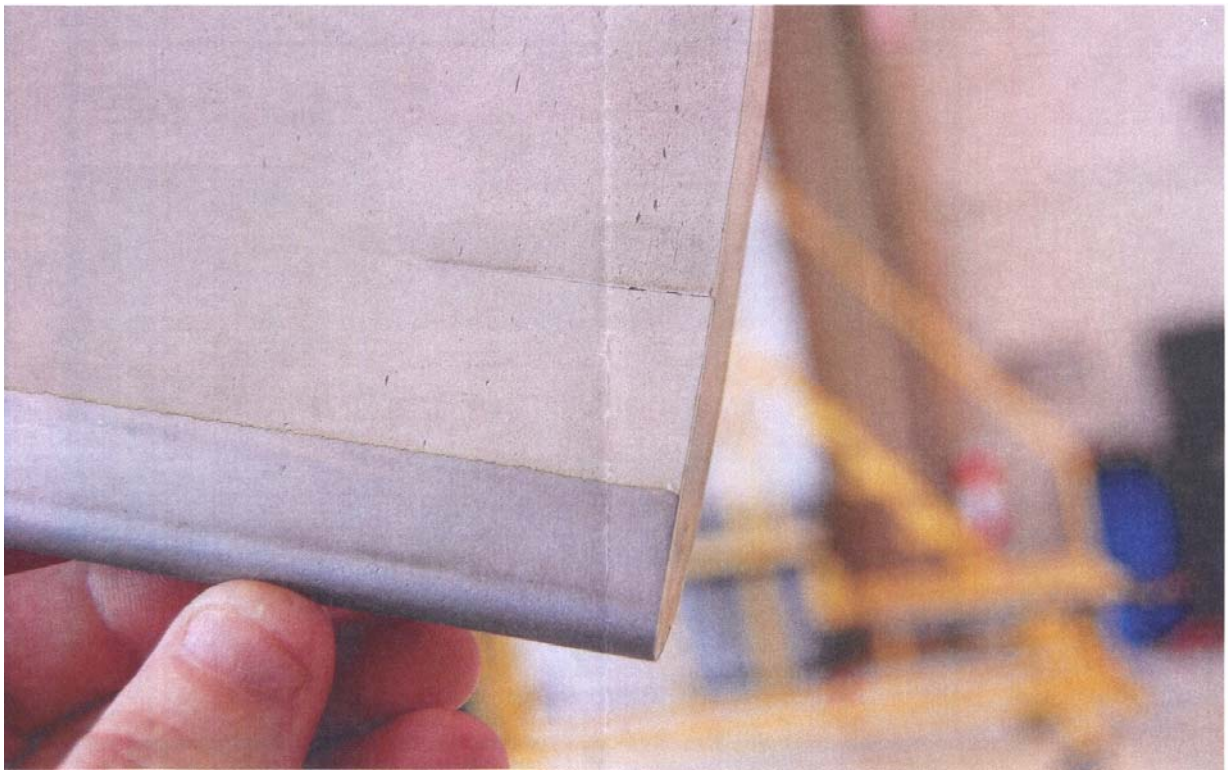

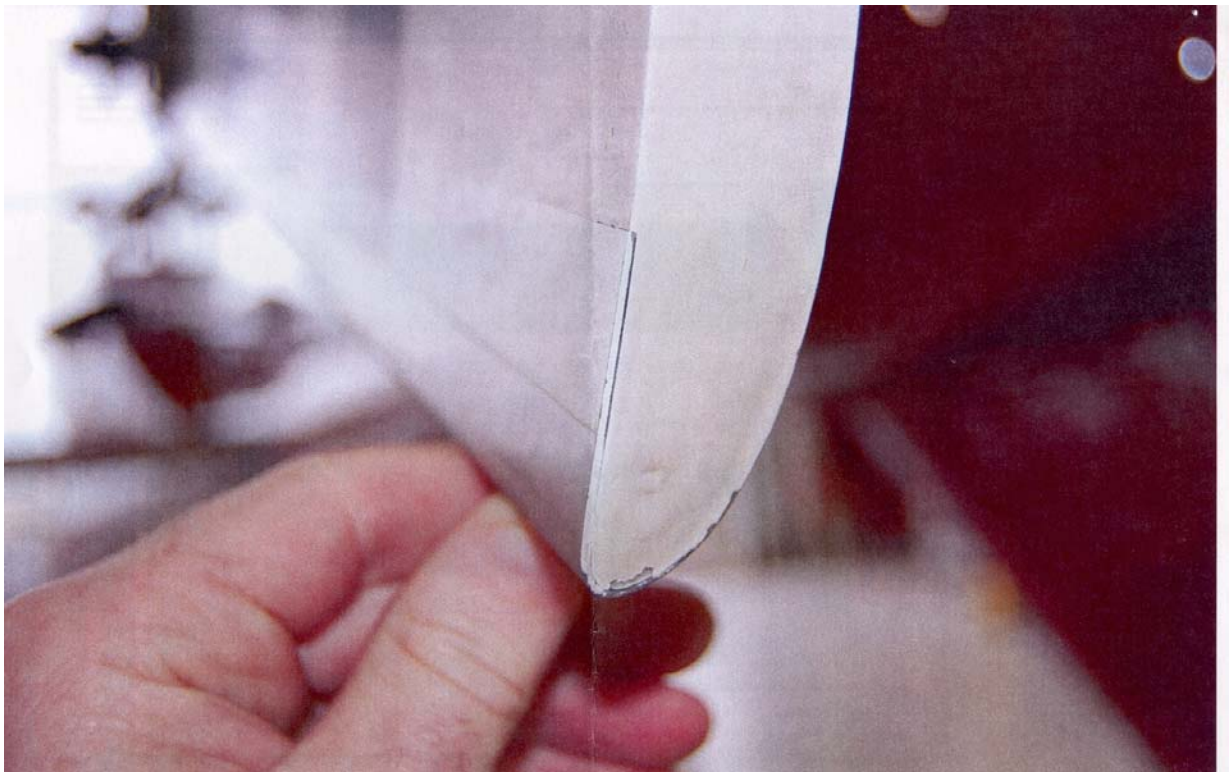

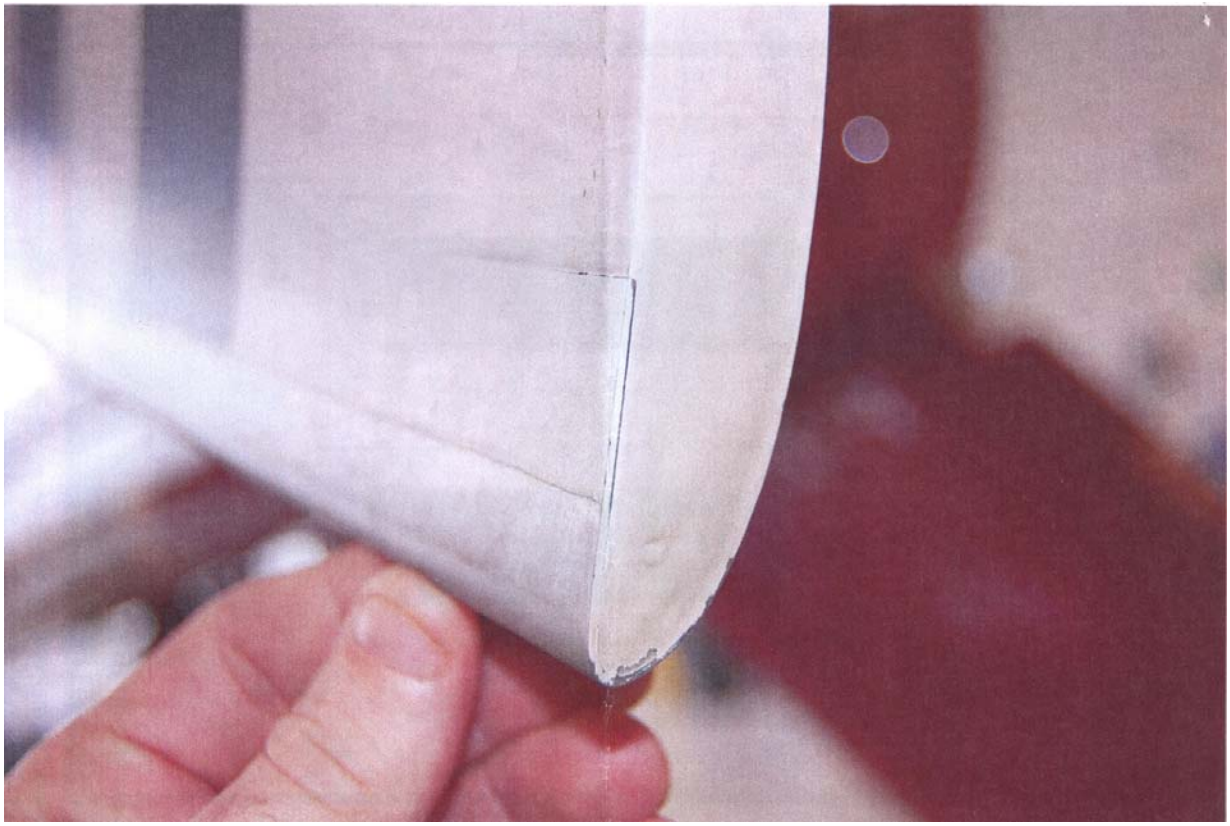

Part Total Time: 1,404.6 hours

POWERPLANTS

Continental: IO360G2B; Stretched Cylinder Studs; ATA 8520

"During the torque sequence for the engine overhaul final assembly, says a repair station submitter, "fasteners on the engine case were brought to half their final torque values *(with no problems)* as per the current TCM IO360 overhaul manual and pertinent service bulletins. Then, while attempting to reach final torque values we noted many of the studs seemed to be pulling from the case, rather than reaching torque. We then removed a cylinder to investigate *(and found)* the studs were stretching. We removed two studs to examine the threads in the case—no damage was found. These studs center portions were obviously elongated and narrowed. Requests to the manufacturer and other technical advisors for probable cause *(provided)* speculation the studs may have been over torqued at some point—moving them from an 'elastic' state to 'plastic.' (Note: the suds were stretch between 220-350 inch pounds of torque, well under final torque value.)" *(Stud P/N: 643651-1—this number found three times in the SDRS database.)*

Part Total Time: (unknown)

Continental: 470-C; Failed Cylinder Studs; ATA 8520

"Two hours into cruise flight," says this operator, "the engine lost power on the number two cylinder as indicated on the Ultimate Bar Graph-16 *(engine analyzer).* Shortly after, the number two cylinder jug blew through the engine cowl, spraying oil over the windscreen. The aircraft *(Beechcraft 35J)* landed safely on a two land state highway. The cylinder remained hanging on the outside of the aircraft by the UBG-16 wiring—and the plug wires.

"(Subsequent) investigation suspects improperly torqued cylinder bolts during overhaul." (P/N not provided.)

Part Total Time: (N/A)

AIR NOTES

INTERNET SERVICE DIFFICULTY REPORTING (iSDR) WEB SITE

The Federal Aviation Administration (FAA) Internet Service Difficulty Reporting (iSDR) web site is the front-end for the Service Difficulty Reporting System (SDRS) database that is maintained by the Aviation Data Systems Branch, AFS-620, in Oklahoma City, Oklahoma. The iSDR web site supports the Flight Standards Service (AFS), Service Difficulty Program by providing the aviation community with a voluntary and electronic means to conveniently submit in-service reports of failures, malfunctions, or defects on aeronautical products. The objective of the Service Difficulty Program is to achieve prompt correction of conditions adversely affecting continued airworthiness of aeronautical products. To accomplish this, Malfunction or Defect Reports (M or Ds) or Service Difficulty Reports (SDRs) as they are commonly called, are collected, converted into a common SDR format, stored, and made available to the appropriate segments of the FAA, the aviation community, and the general public for review and analysis. SDR data is accessible through the "Query SDR data" feature on the iSDR web site at: http://av-info.faa.gov/sdrx/Query.aspx.

In the past, the last two pages of the Alerts contained a paper copy of FAA Form 8010-4, Malfunction or Defect Report. To meet the requirements of *Section 508, this form will no longer be published in the Alerts; however, the form is available on the Internet at: http://forms.faa.gov/forms/faa8010-4.pdf. You can still download and complete the form as you have in the past.

*Section 508 was enacted to eliminate barriers in information technology, to make available new opportunities for people with disabilities, and to encourage development of technologies that will help achieve these goals.

A report should be filed whenever a system, component, or part of an aircraft, powerplant, propeller, or appliance fails to function in a normal or usual manner. In addition, if a system, component, or part of an aircraft, powerplant, propeller, or appliance has a flaw or imperfection, which impairs or may impair its future function, it is considered defective and should be reported under the Service Difficulty Program.

The collection, collation, analysis of data, and the rapid dissemination of mechanical discrepancies, alerts, and trend information to the appropriate segments of the FAA and the aviation community provides an effective and economical method of ensuring future aviation safety.

The FAA analyzes SDR data for safety implications and reviews the data to identify possible trends that may not be apparent regionally or to individual operators. As a result, the FAA may disseminate safety information to a particular section of the aviation community. The FAA also may adopt new regulations or issue airworthiness directives (ADs) to address a specific problem.

The iSDR web site provides an electronic means for the general aviation community to voluntarily submit reports, and may serve as an alternative means for operators and air agencies to comply with the reporting requirements of 14 Title of the Code of Federal Regulations (CFR) Section 121.703, 125.409, 135.415, and 145.221, if accepted by their certificate-holding district office. FAA Aviation Safety Inspectors may also report service difficulty information when they conduct routine aircraft maintenance surveillance as well as accident and incident investigations.

The SDRS database contains records dating back to 1974. At the current time, we are receiving approximately 40,000 records per year. Reports may be submitted to the iSDR web site on active data entry form or submitted hardcopy to the following address.

The SDRS and iSDR web site point of contact is:

Pennie Thompson
Service Difficulty Reporting System, Program Manager
Aviation Data Systems Branch, AFS-620
P.O. Box 25082
Oklahoma City, OK 73125
Telephone: (405) 954-5313
SDRS Program Manager e-mail address: 9-AMC-SDR-ProgMgr@faa.gov

IF YOU WANT TO CONTACT US

We welcome your comments, suggestions, and questions. You may use any of the following means of communication to submit reports concerning aviation-related occurrences.

Editor: Daniel Roller (405) 954-3646
FAX: (405) 954-4570 or (405) 954-4655

E-mail address: Daniel.Roller@faa.gov

Mailing address: FAA, **ATTN: AFS-620 ALERTS**, P.O. Box 25082, Oklahoma City, OK 73125-5029

You can access current and back issues of this publication from the internet at: http://av-info.faa.gov/. Select the General Aviation Airworthiness Alerts heading.

AVIATION SERVICE DIFFICULTY REPORTS

The following are abbreviated reports processed for the previous month, which have been entered into the FAA Service Difficulty Reporting System (SDRS) database. This is not an all-inclusive listing of Service Difficulty Reports. For more information, contact the FAA, Regulatory Support Division, Aviation Data Systems Branch, AFS-620, located in Oklahoma City, Oklahoma. The mailing address is:

FAA
Aviation Data Systems Branch, AFS-620
PO Box 25082
Oklahoma City, OK 73125

To retrieve the complete report, click on the Control Number located in each report. These reports contain raw data that has not been edited. Also, because these reports contain raw data, the pages containing the raw data are not numbered.

If you require further detail please contact AFS-620 at the address above.

Federal Aviation Administration

Service Difficulty Report Data

Sorted by aircraft make and model then engine make and model. This report derives from unverified information submitted by the aviation community without FAA review for accuracy.

Control Number	Aircraft Make	Engine Make	Component Make	Part Name	Part Condition
Difficulty Date	**Aircraft Model**	**Engine Model**	**Component Model**	**Part Number**	**Part Location**
2010FA0000885				SEAL	FAILED
8/23/2010				R600175B	FUEL PUMP

SEVERAL DIFFERENT FUEL PUMPS HAVE BEEN SENT TO US FOR REPAIR DUE TO THE UNITS LEAKING FUEL. THESE FUEL PUMPS RANGE FROM TSO = 50 TO TSO = 400. UPON INSP, TINY HOLES HAVE BEEN FOUND IN THE SEAL ASSEMBLIES' RUBBER. THE VARIOUS FUEL PUMPS INVOLVED ARE AS FOLLOWS: PN: 2PR600-SERIES AND PN: 51076-7. WE HAVE NOT BEEN ABLE TO PIN-POINT THIS PROBLEM TO ANY ONE PARTICULAR LOT NR. WE ARE WORKING, TRYING TO RESOLVE THIS ISSUE. WE HAVE ALSO CONTACTED OUR LOCAL FSDO. UNTIL THIS ISSUE IS RESOLVED, WE ARE OPTING TO STOP REPAIRING/OVERHAULING ANY OF THE AFFECTED FUEL PUMPS.

2010FA0000886				SEAL	FAILED
8/23/2010				R40099	FUEL PUMP

SEVERAL DIFFERENT FUEL PUMPS HAVE BEEN SENT TO US FOR REPAIR DUE TO THE UNITS LEAKING FUEL. THESE FUEL PUMPS RANGE FROM TSO = 50 TO TSO= 400. UPON INSP, TINY HOLES HAVE BEEN FOUND IN THE SEAL ASSEMBLIES' RUBBER. THE VARIOUS FUEL PUMPS INVOLVED ARE AS FOLLOWS: PN: 2PR400-SERIES, PN: FP-300-P, AND PN: 51076-1. WE HAVE NOT BEEN ABLE TO PIN-POINT THIS PROBLEM TO ANY ONE PARTICULAR LOT NUMBER. WE ARE WORKING , TRYING TO RESOLVE THIS ISSUE. WE HAVE ALSO CONTACTED OUR LOCAL FSDO. UNTIL THIS ISSUE IS RESOLVED, WE ARE OPTING TO STOP REPAIRING/OVERHAULING ANY OF THE AFFECTED FUEL PUMPS.

2010FA0000930				TUBE	DEFLATED
9/1/2010				3022464016006	TIRE

FAA WAS NOTIFIED BY A MECHANIC WHO EXPERIENCED 8 TO 9 OCCURRENCES OF TIRE DEFLATING DURING TAXI. HIS INVESTIGATION DISCOVERED THAT THE SEAMS OF THE INNER TUBE SPLIT WHICH RESULTED IN THE DEFLATION OF THE TIRE. THE INNER TUBE IS AN ACFT TUBE 600/6. MECHANIC STATED THE TUBES BEING PURCHASED ARE SMALLER IN SIZE FROM THE OLD TUBES THAT HE PREVIOUSLY PURCHASED. THE MECHANIC COMPARED THE SIZE OF THE ONE TUBE 600/6 TO THE OTHER MFG TUBE 600/6 (PN 092-315-0) AND IT WAS FOUND TO BE LARGER IN SIZE. THE MECHANIC FEELS THE NEW SMALLER SIZE TUBE MAY HAVE SOMETHING TO DO WITH THE SEAMS SPLITTING.

2010FA0000899		ALLSN		COMBUSTION LINER	CRACKED
8/19/2010		250C30P		23066675	ENGINE

FOUND A CRACK IN THE WELD THAT ATTACHES THE SUPPORT (-3 DETAIL) TO THE SUPORT PLATE (-6 DETAIL). THE CRACK EXTENDS ABOUT 25 PERCENT OF THE WAY AROUND THE PART.

2010FA0000925		LYC		LINE	DETACHED
8/31/2010		O360*			OIL SYSTEM

LOSS OF OIL PRESSURE IN FLIGHT, UNSCHEDULED LANDING. FOUND .1250 PIPE PLUG THAT IS NORMALLY INSTALLED IN THE OIL PUMP HOUSING TO HAVE FALLEN OUT. MAX OIL PRESSURE ATTAINABLE WITH OUT THE PLUG WAS 20 PSI. SB555A DEAL WITH THIS ISSUE.

2010FA0000957		PWA		CYLINDER HEAD	CRACKED
7/21/2010		R1340*		399359	NR 2

CYLINDER NR2 CRACKED IN AREA OF FRONT SPARK PLUG TO REAR SPARK PLUG. THIS DEFECT IS CALLED OUT IN : AD 99-11-02 AND SB 1787.

COEA2010091001807	AEROSP	DOOR FRAME	CRACKED
9/10/2010	ATR72212	S52176207216	PAX DOOR

WO#: 04224 (M7) NR#: 11 / SAT / STC CONVERSION / AFT PASSENGER DOOR UPPER FRAME HAS A CRACK THAT MEASURES APPROXIMATELY 0.40 FROM E.O.P. WILL WORK WITH ATR TO OBTAIN SRAS FOR REPAIR.

2010FA0000850	AGUSTA	PWC	EFI	FAILED
8/6/2010	A109E	PW206C	193850103	

UPON RECEIVING THE EFI, IT WAS TURNED ON AND IT OPERATED NORMALLY FOR ABOUT 2 MINUTES, EXCEPT THE CURRENT DRAW WAS HIGH. AT THE END OF THIS PERIOD, AN ACRID ODOR WAS DETECTED BY THE TECH AND THE TEST WAS STOPPED. THE DEFECT AND ITS ROOT CAUSE IS STILL BEING DETERMINED. EFI WAS REMOVED FROM ACFT FOR REASON OF SMOKE FROM UNIT & INOPERATIVE. THIS ELECTRONIC FLT INSTRUMENT ARRIVED AT REPAIR STA ON 8/05/2010. IT WAS SENT ON RMA NR 10210-007. THE PAPERWORK WITH THE UNIT INDICATED AN ITALIAN MALFUNCTION REPORT, NR 640007400, UNDER THEIR PN FOR THIS UNIT MFG HAD NOT BEEN NOTIFIED OF THIS PREVIOUSLY, AND THIS IS THE FIRST CASE OF THIS CONDITION REPORTED FOR 193850-103 ELECTRONIC FLIGHT INSTRUMENT. ITALIAN MRD SEEMS TO INDICATE THAT REPORT WAS WRITTEN FEB 22, 2010, AND ANOTHER WAS WRITTEN ON MARCH 12, 2010, BUT MFG WAS NOT NOTIFIED AT THAT TIME.

2010FA0000922	AGUSTA	SKIN	DELAMINATED
8/27/2010	AW139		TAILBOOM

WHILE CONDUCTING A POST FLIGHT INSP, THE FLIGHT CREW NOTICED THAT THE TAILBOOM HAD AN AREA THAT WAS DELAMINATED ON THE RT SIDE OF THE TAILBOOM. THIS IS IN THE SAME CRITICAL AREA THAT HAS BEEN ADDRESSED BY AD 2009-19-51. IN ADDITION TO THE DELAMINATED AREA, THERE WAS A OUTWARD PROTRUDING VERTICAL CREASE IN THE MIDDLE OF THE DELAMINATED AREA. THE FLIGHT CREW DID NOT REPORT ANYTHING UNUSUAL DURING THE FLIGHT. THE DAMAGE FROM TOP TO BOTTOM IT IS 25" INCH AND 12" INCH SIDE TO SIDE. THE SKIN IS ALSO CRACKED ALONG WHAT APPEARS TO BE A BOND LINE. MFG HAS ISSUED OPTIONAL TECH BULLETINS BT 139-159 FOR "TAILBOOM RETRO-MODIFICATION PROCEDURE" AND BT 139-200 FOR "TAILBOOM REINFORCEMENT STRUCTURAL RETRO-MODIFICATION" TO PREVENT STRUCTURAL FAILURE OF THIS NATURE. THESE BULLETINS HAVE NOT YET BEEN INCORPORATED ON THE SUBJECT ACFT.

2010FA0000929	AIRBUS	FLOOR PANEL	CORRODED
9/1/2010	A320232	D5367321000000	ZONE 100

SURFACE CORROSION ON AFT CARGO COMPARTMENT FLOOR PANEL 161DF. PANEL IS LISTED AS PRIMARY STRUCTURE AND NO CORROSION REMOVAL LIMITS ARE AVAILABLE IN SRM. REPAIRED PANEL IAW SRM 53-02-00 FIG 207.

2010FA0000920	AIRBUS	PANEL	CORRODED
8/27/2010	A320232	D5725130600200	ZONE 500

LT WING FUEL TANK ACCESS PANEL 540 FB CORRODED. NO CORROSION REMOVAL LIMITS AVAILABLE IN SRM. PANEL IS LISTED AS PRIMARY STRUCTURE. REPLACED PANEL WITH NEW PART NR D5725130600200.

2010FA0000739	AIRBUS	ACCESS PANEL	CORRODED
7/19/2010	A320232	D5725131220200	LT WING

CORROSION ON FUEL TANK ACCESS PANEL 640 QB. NO CORROSION REMOVAL LIMITS FOUND IN SRM. PANEL IS LISTED AS A PRIMARY STRUCTURAL ELEMENT. REPLACED PANEL WITH NEW PANEL.

2010FA0000889	AIRBUS	SKIN	DELAMINATED
8/25/2010	A320232	D5744358201208	ZONE 500

LT WING LOWER L/E PANEL, 521 EB UPPER SURFACE DELAMINATED. REPAIRED PANEL IAW SRM 51-77-13 PARA 2.F(1) FIG 10. PANEL IS LISTED AS PRIMARY STRUCTURE.

2010FA0000870	AIRBUS	FLOORBEAM	CORRODED

8/21/2010	A320232	D53470371200	FUSELAGE

CORROSION ON AFT CARGO COMPARTMENT FLOOR SUPPORT CROSS SECTION FR 58, LBL 28 TO RBL 28. NO CORROSION REMOVAL LIMITS AVAILABLE IN SRM. REPLACED CROSS SECTION WITH NEW PART.

2010FA0000871	AIRBUS	PROFILE	CORRODED
8/21/2010	A320232	D53470348202	FUSELAGE

CORROSION ON AFT CARGO COMPARTMENT PROFILE RBL 28 BETWEEN FR 58 - FR 59. NO CORROSION REMOVAL LIMITS AVAILABLE IN SRM. REPLACED PROFILE WITH NEW PART.

2010FA0000872	AIRBUS	PROFILE	CORRODED
8/21/2010	A320232	D53470348202	CARGO BAY

CORROSION ON AFT CARGO COMPARTMENT PROFILE LBL 28, BETWEEN FR 58 - FR 59. NO CORROSION REMOVAL LIMITS AVAILABLE IN SRM. REPLACED PROFILE WITH NEW PART.

2010FA0000873	AIRBUS	FLOOR SUPPORT	CORRODED
8/21/2010	A320232	D53470347200	CARGO BAY

CORROSION ON AFT CARGO COMPARTMENT FLOOR SUPPORT PROFILE FR 59 BL 0. NO CORROSION REMOVAL LIMITS AVAILABLE IN SRM. REPLACED PROFILE WITH NEW PART.

2010FA0000874	AIRBUS	FLOOR SUPPORT	CORRODED
8/21/2010	A320232	D53470347200	CARGO BAY

CORROSION ON AFT CARGO COMPARTMENT FLOOR SUPPORT PROFILE BL 0 BETWEEN FR 58 AND FR 59. NO CORROSION REMOVAL LIMITS AVAILABLE IN SRM. REPLACED PROFILE WITH NEW PART.

2010FA0000875	AIRBUS	FLOORBEAM	CORRODED
8/21/2010	A320232	D53470372200	CARGO BAY

CORROSION ON AFT CARGO COMPARTMENT FLOOR SUPPORT PROFILE FR 59, BL 0 TO LBL 28. NO CORROSION REMOVAL LIMITS AVAILABLE IN SRM. REPLACED PROFILE WITH NEW PART.

2010FA0000876	AIRBUS	FLOORBEAM	CORRODED
8/21/2010	A320232	D53470372200	CARGO BAY

CORROSION ON BULK CARGO COMPARTMENT FLOOR SUPPORT CROSS SECTION FR 59, BL 0 TO RBL 28. NO CORROSION REMOVAL LIMITS AVAILABLE IN SRM. REPLACED CROSS SECTION WITH NEW PART.

2010FA0000877	AIRBUS	PROFILE	CORRODED
8/21/2010	A320232	D53470348202	CARGO BAY

CORROSION ON BULK CARGO COMPARTMENT RT SIDE PROFILE RBL 28 BETWEEN FR 62 AND FR 63. NO CORROSION REMOVAL LIMITS AVAILABLE IN SRM. REPLACED PROFILE WITH NEW PART.

2010FA0000878	AIRBUS	PROFILE	CORRODED
8/21/2010	A320232	D53470348202	CARGO BAY

CORROSION ON BULK CARGO COMPARTMENT PROFILE LBL 28 BETWEEN FR 62 AND FR 63. NO CORROSION REMOVAL LIMITS AVAILABLE IN SRM. REPLACED PROFILE WITH NEW PART.

2010FA0000879	AIRBUS	PROFILE	CORRODED
8/21/2010	A320232	D53470348202	CARGO BAY

CORROSION ON AFT CARGO COMPARTMENT PROFILE AT STR 35 LT BETWEEN FR 58 AND FR 59. NO CORROSION REMOVAL LIMITS AVAILABLE IN SRM. REPLACED PROFILE WITH NEW PART.

2010FA0000880	AIRBUS	FLOOR PANEL	CORRODED
8/21/2010	A320232	D5367521100000	ZONE 100

CORROSION AND IMPACT RELATED DELAMINATION ON AFT CARGO COMPARTMENT FLOOR PANEL 151AF. PANEL

IS LISTED AS PRIMARY STRUCTURE. NO CORROSION REMOVAL LIMITS AVAILABLE IN SRM. REPLACED PANEL WITH NEW PART.

2010FA0000881	AIRBUS	TRUNNION PIN	CORRODED
8/21/2010	A320232	D321350001514	LT MLG

CORROSION ON LT MLG AFT TRUNNION PINTLE PIN. NO CORROSION REMOVAL LIMITS AVAILABLE. REPLACED PIN WITH NEW PART.

2010FA0000882	AIRBUS	TRANSITION PANEL	CORRODED
8/21/2010	A320232	D5367401900000	ZONE 100

AFT CARGO COMPARTMENT FLOOR TRANSITION PANEL 151 BF CORRODED ON UPPER SURFACE AND HAS IMPACT RELATED DELAMINATION. PANEL IS LISTED AS PRIMARY STRUCTURE. NO CORROSION REMOVAL LIMITS AVAILABLE IN SRM. FABRICATED NEW PANEL IAW SRM 53-02-00, FIG 209.

2010FA0000857	AIRBUS	ATTACH FITTING	CORRODED
8/21/2010	A320232	D53470394200	FLOOR SUPPORT

CORROSION ON AFT CARGO COMPARTMENT FLOOR SUPPORT CROSS SECTION ATTACH FITTING FR 53 BL 0. NO CORROSION REMOVAL LIMITS FOUND IN SRM. REPLACED FITTING WITH NEW PART.

2010FA0000858	AIRBUS	FLOOR SUPPORT	CORRODED
8/21/2010	A320232	D53470570202	CARGO BAY

CORROSION ON AFT CARGO COMPARTMENT FLOOR SUPPORT CROSS SECTION FR 53 LBL 28 TO RBL 14. NO CORROSION REMOVAL LIMITS FOUND IN SRM. CROSS SECTION REPLACED WITH NEW PART.

2010FA0000867	AIRBUS	PROFILE	CORRODED
8/21/2010	A320232	D53470346200	CARGO BAY

CORROSION ON AFT CARGO COMPARTMENT PROFILE LBL 28 BETWEEN FR 47 - FR 48. NO CORROSION REMOVAL LIMITS AVAILABLE IN SRM. REPLACED PROFILE WITH NEW PART.

2010FA0000868	AIRBUS	PROFILE	CORRODED
8/21/2010	A320232	D534705700200	CARGO BAY

CORROSION ON AFT CARGO COMPARTMENT PROFILE FR 47, LBL 28 TO RBL 28. NO CORROSION REMOVAL LIMITS AVAILABLE IN SRM. REPLACED PROFILE WITH NEW PART.

2010FA0000869	AIRBUS	PROFILE	CORRODED
8/21/2010	A320232	D53470340008	CARGO BAY

CORROSION ON AFT CARGO COMPARTMENT PROFILE LBL 28, FR 52 TO FR 56. NO CORROSION REMOVAL LIMITS AVAILABLE IN SRM. REPLACED PROFILE WITH NEW PART.

2010FA0000854	AIRBUS	ATTACH FITTING	CORRODED
8/21/2010	A320232	D53470268201	FLOOR SUPPORT

CORROSION ON AFT CARGO COMPARTMENT FLOOR SUPPORT CROSS SECTION ATTACH FITTING FR 59, LBL 14. NO CORROSION REMOVAL LIMITS FOUND IN SRM. FITTING REPLACED WITH NEW PART.

2010FA0000855	AIRBUS	FLOOR SUPPORT	CORRODED
8/21/2010	A320232	D53470570200	FUSELAGE

CORROSION ON AFT CARGO COMPARTMENT FLOOR SUPPORT CROSS SECTION FR 50 RBL 20. NO CORROSION REMOVAL LIMITS AVAILABLE IN SRM. CROSS SECTION REPLACED WITH NEW PART.

2010FA0000856	AIRBUS	ATTACH FITTING	CORRODED
8/21/2010	A320232	D53470394200	FLOOR SUPPORT

CORROSION ON AFT CARGO COMPARTMENT FLOOR SUPPORT CROSS SECTION ATTACH FITTING FR 58 BL 0. NO

CORROSION REMOVAL LIMITS FOUND IN SRM. FITTING REPLACED WITH NEW PART.

2010FA0000859	AIRBUS	PROFILE	CORRODED
8/21/2010	A320232	D53470340000	CARGO BAY

CORROSION ON AFT CARGO COMPARTMENT PROFILE RBL 28 BETWEEN FR 47 AND FR 48. NO CORROSION REMOVAL LIMITS FOUND IN SRM. REPLACED PROFILE WITH NEW PART.

2010FA0000860	AIRBUS	FLOORBEAM	CORRODED
8/21/2010	A320232	D534705700202	CARGO BAY

CORROSION ON AFT CARGO COMPARTMENT FLOOR SUPPORT PROFILE FR 59, LBL 28 TO RBL 14. NO CORROSION REMOVAL LIMITS FOUND IN SRM. REPLACED PROFILE WITH NEW PART.

2010FA0000861	AIRBUS	FLOORBEAM	CORRODED
8/21/2010	A320232	D534705700200	CARGO BAY

CORROSION ON AFT CARGO COMPARTMENT FLOOR SUPPORT CROSS SECTION AT FR 50 LBL 28 TO RBL 28. NO CORROSION REMOVAL LIMITS FOUND IN SRM. REPLACED CROSS SECTION WITH NEW PART.

2010FA0000862	AIRBUS	FLOORBEAM	CORRODED
8/21/2010	A320232	D53470346200	CARGO BAY

CORROSION ON AFT CARGO COMPARTMENT PROFILE RBL 28, FR 48 TO FR 53. NO CORROSION REMOVAL LIMITS FOUND IN SRM. REPLACED PROFILE WITH NEW PART.

2010FA0000863	AIRBUS	FLOORBEAM	CORRODED
8/21/2010	A320232	D534703400008	CARGO BAY

CORROSION ON AFT CARGO COMPARTMENT PROFILE RBL 28, FR 56 TO FR 58. NO CORROSION REMOVAL LIMITS FOUND IN SRM. REPLACED PROFILE WITH NEW PART.

2010FA0000864	AIRBUS	PROFILE	CORRODED
8/21/2010	A320232	D53470346200	CARGO BAY

CORROSION ON AFT CARGO COMPARTMENT PROFILE AT LBL 28, FR 52 TO FR 58. NO CORROSION REMOVAL LIMITS FOUND IN SRM. REPLACED PROFILE WITH NEW PART.

2010FA0000865	AIRBUS	PROFILE	CORRODED
8/21/2010	A320232	D53470344000	CARGO BAY

CORROSION ON AFT CARGO COMPARTMENT PROFILE LBL 28, FR 49 TO FR 52. NO CORROSION REMOVAL LIMITS FOUND IN SRM. REPLACED PROFILE WITH NEW PART.

2010FA0000866	AIRBUS	PROFILE	CORRODED
8/21/2010	A320232	D53470344000	CARGO BAY

CORROSION ON AFT CARGO COMPARTMENT PROFILE LBL 28 FR 49 TO FR 52. NO CORROSION REMOVAL FOUND IN SRM. REPLACED PROFILE WITH NEW PART.

2010FA0000946	AIRBUS	FLOOR SUPPORT	CORRODED
9/4/2010	A320232	D53974684001	CARGO BAY

CORROSION ON AFT CARGO COMPARTMENT FLOOR SUPPORT WEB AT STRINGER 38 LT BETWEEN FR 58 - 59. WEB IS LISTED AS PRIMARY STRUCTURE. NO CORROSION REMOVAL LIMITS AVAILABLE IN SRM. REPLACED WEB WITH NEW PART.

2010FA0000947	AIRBUS	SILL	CORRODED
9/4/2010	A320232	D5347576520401	FUSELAGE

CORROSION ON BULK CARGO COMPARTMENT THRESHOLD(SILL) BETWEEN FR 60 - 62 STRINGER 37 - 38 LT. SILL IS LISTED AS PRIMARY STRUCTURE. NO CORROSION REMOVAL LIMITS AVAILABLE IN SRM. REPLACED SILL WITH

NEW PART.

2010FA0000948	AIRBUS		FITTING	CORRODED
9/4/2010	A320232		D5337219202	FLOORBEAM

CORROSION ON AFT CARGO COMPARTMENT FLOOR SUPPORT FITTING FR 47 LBL 28. FITTING IS LISTED AS PRIMARY STRUCTURE. NO CORROSION REMOVAL LIMITS AVAILABLE IN SRM. REPLACED FITTING WITH NEW PART.

2010FA0001008	AMD		DISC	FAILED
9/9/2010	FALCON2000		RFS1065	MLG BRAKES

DEFECT REPORTED AS BRAKE BINDING/OVERHEATING BRAKE UNIT S/N AUG86-2471. REMOVED BRAKE UNIT FITTING. FAST TAXI TEST CARRIED OUT. THE BRAKE LOCKED UP, WHEEL REMOVED OVERHEATING AGAIN EVIDENT & ROTATING DISC FELL OUT IN PIECES. BOTH BRAKES WERE O/H USING NEW ROTATING DISCS. THERE HAS BEEN 1 PREVIOUS REPORTED INCIDENT WHEN OVERHEATING WAS REPORTED. THIS UNIT WAS ALSO O/H, USING ROTATING DISCS. REPAIR STATION HAS SERVICED 36 OF THIS PN BRAKE UNIT USING ROTATING DISCS. ALL THE ROTATING DISCS USED IN THE 3 OFF BRAKES MENTIONED WERE FROM THE SAME BATCH/ LOT NR 01210.

2010FA0000840	AMTR	CONT	ROCKER	BROKEN
7/19/2010	LANCAIRIV	IO550*		ENGINE CYLINDER

SUDDEN ENGINE ROUGHNESS, PARTIAL POWER WENT FULL RICH ON 1 MILE FINAL. ADDED POWER TO FLARE, ENGINE FAILED ENTIRELY DUE TO FLOODING. ROCKER ARM FOUND BROKEN. APPEARS TO BE A FORGE CASTING FLAW THAT INITIATED FATIGUE FAILURE AND/OR HYDROGEN EMBRITTLEMENT. BROKEN ROCKER ARM REMOVED, AND SENT TO MFG FOR ANALYSIS.

2010FA0000940	AMTR		LATCH	WEAK
9/3/2010	LONGEZ			CANOPY

DURING TAKEOFF ROTATION, THE CANOPY OPENED. A CANVAS CANOPY COVER WAS SUCKED OUT OF THE COCKPIT AND CAUSED DAMAGE TO THE PROPELLER. THE PILOT REPORTED SEVERE VIBRATION FOLLOWED BY A FIRE IN THE ENGINE AREA THAT DESTROYED THE ACFT. PILOT/BUILDER SUGGESTS THE SECONDARY CANOPY LATCH MECHANISM IS NOT RUGGED ENOUGH TO MAINTAIN INTEGRITY OVER LONG EXPOSURE TO PERSONS ENTERING AND EXITING THE COCKPIT AREA.

2010FA0000890	AMTR		LATCH	BROKEN
8/15/2010	RV6A			CANOPY

CANOPY LATCH BROKE WHEN PILOT TRIED CLOSING CANOPY FOR FLIGHT. NTSB ACCIDENT ID CEN10CA481. THE PILOT BROKE THE LATCH, HAD IT WELD REPAIRED AND BROKE IT AGAIN PRIOR TO DEPARTURE ON THIS FLIGHT. THE ACCIDENT IS DUE TO PILOT ERROR. THIS IS THE THIRD CANOPY LATCH PROBLEM, HAVE BEEN INVOLVED WITH IN THE PAST YEAR. THE OTHER 2 DID NOT RESULT IN AN ACCIDENT OR INCIDENT.

2010FA0001050	BBAVIA		SPAR	CRACKED
9/24/2010	7CCM			UNKNOWN

DURING ANNUAL INSP, REF AD 2000-25-02 R1, FOUND 3 AREAS WHERE THERE WERE CRACKS. ACFT IS NOT AIRWORTHY UNTIL THE SPAR IS REPLACED.

V0DR967Y001	BEECH	HARTZL	JAM-NUT	DEFECTIVE
8/11/2010	1900D		B3368	PROPELLER

DURING ASSY OF A PROPELLER, THE JAM-NUTS, PN B-3368 WERE INSTALLED AND THE BETA RING RUN-OUT TOLERANCE COULD NOT BE MAINTAINED. FURTHER TROUBLESHOOTING IDENTIFIED THAT THE NUT PN B-3368 WAS MFG WITH THE THREADS NOT TRUE. CAUSING THE RUN-OUT TO BECOME EXCESSIVE WHEN THE NUT WAS TIGHTENED.

2010F00198	BEECH	PWA	MOTOR	BURNED
8/25/2010	200BEECH	PT6A41	20041	VENT BLOWER

DURING CRUISE FLIGHT, THE PASSENGERS SMELLED A BURNED ELECTRICAL ODOR. THE ODOR WAS VERIFIED AND THE PILOT SHUTDOWN THE ENVIRONMENTAL SYS AND LANDED AT THE NEAREST SUITABLE AIRPORT.

2010FA0000888	BEECH	PWA	STRAP	CRACKED
8/25/2010	300BEECH	PT6A60	1014200131122	FUSLEAGE

DURING A ROUTINE NR3 PHASE INSP, A CRACK WAS FOUND ON A CROSS TIE STRAP. THE STRAP LOCATION WAS ON THE RT SIDE OF THE CABIN INTERIOR AT SL 227.125. THE CRACK APPEARED TO BE A COMPRESSION RELIEF CRACK RUNNING IN A HORIZONTAL FASHION BETWEEN THE UPPER AND LOWER FUSELAGE FRAMES.

2010FA0000935	BEECH	CONT	FITTING	MISLOCATED
9/2/2010	3533	IO470K	631658	ENGINE

FUEL INJECTION SETUP IAW SID 97-3E, BUT ELECTRONIC FUEL FLOW COMPUTER SHOWED FLOW BELOW SPEC. UNABLE TO INCREASE FLOW SUFFICIENTLY BY INCREASING PRESSURE. DISCOVERED THAT INLET ELBOW FITTING PARTS (631658 AND 628437) HAD BEEN PREVIOUSLY REVERSED, PROBABLY 12 YEARS PRIOR DURING INSTALLATION OF AN ELECTRONIC FUEL FLOW TRANSDUCER. PART 631658 HAS A RESTRICTOR ORIFICE, WHILE 628437 DOES NOT. THE PARTS LOOK IDENTICAL EXTERNALLY. IT TAKES A VERY CAREFULL LOOK TO SEE THE INTERNAL DIFFERENCE. THE SRM DOES NOT MENTION THIS. THE PARTS MANUAL SHOWS THE DIFFERENT PART NRS, BUT DOES NOT DESCRIBE THE DIFFERENCES. THIS WOULD BE A VERY EASY MISTAKE TO MAKE, AND VERY DIFFICULT TO DIAGNOSE LATER. THIS PROBLEM PROBABLY STARTED 12 YEARS AGO, AND WAS NOT DETECTED OR CORRECTED UNTIL NOW. THIS AIRPLANE HAD 5 CYLINDER CHANGES DURING THIS TIME, PROBABLY CAUSED BY LEAN OPERATION AT FULL POWER. THE ACFT PROBABLY DID NOT GENERATE FULL POWER ON TAKEOFF DUE TO A VERY LEAN FULL-RICH MIXTURE. IT IS CRITICAL TO COMMUNICATE THIS TO MECHANICS AND OWNERS TO PREVENT A DANGEROUS CONDITION.

2010FA0000833	BEECH	CONT	SWITCH	BURNED
7/22/2010	58	IO550C	35380132103	ZONE 100

THE ACFT LANDING LIGHT SWITCH WAS OBSERVED TO BE HOT AND EMITTING SMOKE. SWITCH IS POST AD 2008-13-17. THESE SWITCHES ARE THE SAME AS ORIGINAL WITH ADDITION OF AN INSULATOR THAT PREVENTS A FAILED "OPEN" SWITCH FROM CONDUCTING CURRENT THROUGH THE POINTS HOLD OPEN SPRING THAT THEN BEGINS TO OVERHEAT AND BURN. APPARENTLY, THIS FAILED SWITCH HAD A MFG DEFECT THAT ALLOWED CURRENT TO FLOW THROUGH THIS SPRING. AN INTERNAL INSPECTION OF THE SWITCH WAS INCONCLUSIVE AS TO THE INSTALLATION OR PLACEMENT OF THE INSULATOR PADS DUE TO THE DAMAGE SUSTAINED DURING THE OVERHEAT EVENT. IN A 10 MONTH PERIOD, A FLEET OF 12 ACFT HAS REQUIRED REPLACEMENT OF 21 OF THESE SWITCHES. THE FAILURES HAVE BEEN LIMITED TO THE LANDING AND TAXI LIGHT CIRCUITS. FORTUNATELY, ALL EXCEPT THIS ONE HAVE FAILED IN THE OPEN CONDITION WITH NO INDICATION OF SMOKE OR BURNING. ALL SWITCHES THAT HAVE BEEN OPENED FOR INSPECTION FAIL WHERE THE COPPER BRAID FROM THE POINTS IS ATTACHED TO THE SWITCH FRAME. MFG LISTS THIS SWITCH AS BEING RATED FOR 10,000 MECHANICAL CYCLES BUT EVEN ACCOUNTING FOR UNUSUALLY HEAVY FLEET USAGE, THE FAILURE RATE SEEMS TO BE NO MORE THAN 4000 CYCLES. MUCH HAS BEEN MADE OF THE OVERKILL OF AD 2008-13-17, BUT UNTIL YOUR FLYING IFR AT NIGHT WITH A CIRCUIT THAT IS OVERHEATING AND BURNING WITH NO MEANS OTHER THAN THE MASTERSWITCH TO SHUT IT DOWN, SUDDENLY A GLOWING HOT SWITCH BECOMES MUCH MORE THAN AN INCONVENIENCE. FINAL RESOLUTION OF THIS ISSUE APPEARS TO STILL BE ALLUSIVE.

JDWA147F1	BEECH	PWA	LANDING GEAR	MALFUNCTIONED
9/7/2010	99	PT6A28		

AFTER TAKEOFF, THE GEAR IN-TRANSIT LIGHT CAME ON. PILOT RETURNED WITHOUT FURTHER INCIDENT.

2010FA0001009	BEECH	CONT	CRANKSHAFT	FAILED
8/14/2010	A23A	IO346A	630778A1	ENGINE

IN-FLIGHT CATASTROPHIC FAILURE, DURING INITIAL CLIMB, ENGINE RAN ROUGH, QUIT PRODUCING POWER AND STOPPED. ACFT LANDED IN A FIELD. NO DAMAGE INCURRED.

2010FA0000991	BEECH	CONT	CONTROL CABLE	BINDING
9/9/2010	F33A	IO520BB		FMU

WHILE ON A TRAINING MISSION, THE PILOT`S THROTTLE CABLE WAS HARD TO MOVE. ON TROUBLESHOOTING,

THE MX FOUND THE ARM ON THE THROTTLE SIDE WAS VERY STIFF. FUEL METERING UNIT WAS REPLACED AND RUN-UP WAS PERFORMED OPS CHECK GOOD. NO PROBABLE CAUSE OR RECOMMENDATIONS AT THIS TIME.

2010FA0000961	BEECH	CONT	GASKET	LOOSE
8/20/2010	V35	IO520*	CP0711	INDUCTION SYS

GASKET CAME OFF THE AIR FILTER. THE ADHESIVE HAD FAILED LETTING THE GASKET GET LOOSE AND IT CAN BE SUCKED INTO THE ENGINE, SHUTTING IT DOWN. CALLED MFG AND TALKED TO REP ABOUT THIS.

2010FA0000902	BEECH		AIR FILTER	LOOSE
5/27/2010	V35B		CPO711	ENG INDUCTION

THE GASKET ON THE BACK SIDE OF THIS K & N INDUCTION AIR FILTER CAME LOOSE AND WAS SUCKED INTO THE ENGINE, CAUSING IT TO STOP RUNNING. THIS AIR FILTER IS NOT AN OEM PRODUCT. IT IS INSTALLED WITH AN STC AND LOG BOOK ENTRY. OTHER COMPANY HAD THE SAME PROBLEM AND RESULTED IN AN AD 96-09-06. CALLED COMPANY AND THEY WERE INSULTED AND SAID THEY HAD NO PROBLEMS.

2010FA0000845	BEECH	CONT	CRANKSHAFT	BROKEN
8/4/2010	V35B	IO550B	649900	ENGINE

ACFT DEPARTED, SHORTLY AFTER TAKEOFF, THE ENGINE LOST POWER AND THE ACFT MADE AN EMERGENCY LANDING ON HWY 254. NO DAMAGE TO THE ACFT, AND NO INJURIES TO THE OCCUPANTS. TEARDOWN OF THE ENGINE REVEALED THE CRANKSHAFT HAD BROKEN AT THE (4TH) BEARING FROM THE FLANGE. THE CRANKSHAFT COUNTERWEIGHT HAD ALSO IMPACTED THE CAM SHAFT AND BROKE IT INTO (3) PIECES. ANALYSIS OF THE CRANKSHAFT WILL BE NEEDED TO DETERMINE ANY METALLURGICAL FLAWS.

R29R2010001	BELL		SUPPORT	CRACKED
8/19/2010	412EP			TAILBOOM

DURING A 300 HR, PART B INSP, IT WAS DISCOVERED THAT THE SUPPORTS (PN205-030-889-015) WERE FOUND CRACKED. 2 OTHER ACFT IN THE FLEET WERE CHECKED AND FOUND TO HAVE WORKING RIVETS IN THE SAME LOCATION. THIS CAUSES PLAY IN THE ELEVATORS AND IF LEFT UNDETECTED, COULD CAUSE FAILURE OF THE ELEVATOR SUPPORT AND SUBSEQUENT LOSS OF THE ELEVATOR. MFG HAS AN OPTIONAL TECH BULLETIN (412-08-214) ON THE SUBJECT, BUT CONSIDERING THE SERIOUS NATURE OF THE SUPPORTS, BELIEVE THAT THIS TECH BULLETIN SHOULD BE CONSIDERED AN ALERT SB IF NOT ELEVATED TO AN AD.

2010FA0000841	BELL	PWA	SUPPORT	CRACKED
8/19/2010	412EP	PT6T3	205030889015	TAILBOOM

DURING A 300 HOUR, PART B INSP, IT WAS DISCOVERED THAT THE SUPPORTS (PN - 205-030-889-015) WERE FOUND CRACKED. 2 OTHER ACFT IN THE FLEET WERE CHECKED AND FOUND TO HAVE WORKING RIVETS IN THE SAME LOCATION. THIS CAUSES PLAY IN THE ELEVATORS AND IF LEFT UNDETECTED, COULD CAUSE FAILURE OF THE ELEVATOR SUPPORT AND SUBSEQUENT LOSS OF THE ELEVATOR. MFG HAS AN OPTIONAL TECH BULLETIN (412-08-214) ON THE SUBJECT, BUT CONSIDERING THE SERIOUS NATURE OF THE SUPPORTS, WE BELIEVE THAT THIS TECH BULLETIN SHOULD BE CONSIDERED AN ALERT SB IF NOT ELEVATED TO AN AD.

2010FA0000936	BLANCA		IGNITION SWITCH	MISMANUFACTURED
8/3/2010	7GCBC		A5102	

THE SWITCH WAS INSTLLED IN ACFT ON 8/3/10. IT WAS BRAND NEW, RIGHT OUT OF THE BOX. THIS MODEL SWITCH HAS THE STARTER FUNCTION. WHEN THE SWITCH WAS TURNED TO THE START POSITION, THE STARTER RELAY WOULD NOT OPERATE. IN AN ATTEMPT TO DETERMINE THE PROBLEM, THE SWITCH WAS TAKEN APART AND EXAMINED. IT WAS DISCOVERED THAT THERE WAS A LUBRICANT IN THE FORM OF GREASE COVERING THE INTERNAL COMPONENTS (REFER TO AD93-05-06). THE SWITCH WAS THEN REASSEMBLED AND CONTINUITY TESTS WERE MADE FROM THE BATTERY TERMINAL TO THE STARTER TERMINAL WITH THE SWITCH IN THE START MODE. THERE WAS NO CONTINUITY. TESTS WERE ALSO MADE FRO THE "P" LEAD TERMINALS TO GROUND WITH THE SWITCH IN THE "OFF" POSITION. THERE WAS NO CONTINUITY. THIS IMPLIES THAT THE MAGNETO "P" LEADS ARE NOT BEING GROUNDED WHEN THE SWITCH IS OFF AND THEREFORE A "HOT PROP" CONDITION EXISTS. THE SWITCH WAS THEN DISASSEMBLED, THE GREASE WAS THOROUGHLY CLEANED FROM THE CONTACTS. THE SWITCH WAS THEN REASSEMBLED AND RETESTED. THERE WAS SOLID CONTINUITY BETWEEN ALL OF THE CONTACTS AND THE STRAT FUNCTION WORKED PROPERLY. CONCLUSION: THE GREASE BETWEEN THE

CONTACTS AND THE WIPERS IS ACTING AS AN INSULATOR AND IS PREVENTING THE CONTACTS FROM MAKING A SOLID ELECTRICAL CONNECTION. IT IS THE OPINION OF THIS MECHANIC THAT THIS REPRESENTS A HAZARDOUS CONDITION AND SHOULD BE CORRECTED ASSUMING ALL THE SWITCHES ARE BEING MANUFACTURED USING THIS PROCESS.

ABXR2010081100036	BOEING	PWA	SKIN	DENTED
8/11/2010	727225	JT8D15		ZONE 600

DURING A STORM DAMAGE REPAIR MX EVENT A DENT WAS DISCOVERED ON THE RT WING L/E. DENT WAS SMOOTH AND FREE FROM SHARP CREASES LOCATED ON THE LOWER SURFACE AND MEASURED 4.00" LONG X 1.20' WIDE 0.162 DEEP. THE DENT WAS COLD WORKED BACK TO ITS ORIGINAL SHAPE AND CONTOUR FOLLOWED BY A HFEC WITH NO DEFECTS NOTED. ITEM WAS RETURNED TO SERVICE.

EE4Y10351	BOEING		FLOORBEAM	CORRODED
8/18/2010	7272B7			ZONE 100

DURING INSP, LOWER FUSELAGE AFT CARGO COMPARTMENT STA 1130 FLOORBEAM UPPER CHORD CORRODED.

EE4Y1010347	BOEING		SKIN	DENTED
8/17/2010	7272B7			RT WING AILERON

RIGHT WING OTBD AILERON, LOWER SURFACE WITH DENT AND BULGED SKIN.

EE4Y1010343	BOEING	PWA	STRINGER	CRACKED
8/17/2010	7272B7	JT8D17	BAC15171367	VERTICAL STAB

EMPENAGE VERTICAL STABILIZER INTERNAL CAVITY,STR 5L AT STA 22.5 AND STA 157 WITH CRACK.

EE4Y1010344	BOEING	PWA	STRINGER	CRACKED
8/17/2010	7272B7	JT8D17	BAC15171367	VERTICAL STAB

EMPENAGE VERTICAL STABILIZER INTERNAL CAVITY, STR 6L CRACKED AT STA 180.

EE4Y1010345	BOEING	PWA	STRINGER	CRACKED
8/17/2010	7272B7	JT8D17	BAC15171367	VERTICAL STAB

EMPENNAGE VERTICAL STABILIZER INTERNAL CAVITY, STR 8R AT STA 180 CRACKED.

EE4Y1010346	BOEING	PWA	STRINGER	CRACKED
8/17/2010	7272B7	JT8D17	BAC15201168	VERTICAL STAB

(EE4Y) EMPENAGE VERTICAL STABILIZER INTERNAL CAVITY, ST STA 157 STR 7L CRACKED.

EE4Y1010341	BOEING	PWA	STRINGER	CRACKED
8/17/2010	7272B7	JT8D17	BAC15171367	VERICAL STAB

EMPENAGE VERTICAL STABILIZER INTERNAL CAVITY, STR 8L CRACKED AT STA 157, STA 133 AND STA 22.5.

EE4Y1010342	BOEING	PWA	STRINGER	CRACKED
8/17/2010	7272B7	JT8D17	BAC15171367	VERTICAL STAB

EMPENAGE VERTICAL STABILIZER CAVITY,STR 9L CRACKED AT STA 110.

EE4Y100210	BOEING		FLOORBEAM	CORRODED
6/9/2010	7372X6C			ZONE 100

((EE4Y)) LOWER FUSELAGE MAIN CARGO COMPARTMENT FLOORBEAM WITH CORROSION AT LOWER FLANGE AT BS 460 WL 200 AT LBL 42. W/O Y10122, SUB JOB 1, ITEM 204).

EE4Y100357	BOEING		STRUCTURE	CORRODED
8/19/2010	7372X6C			BS 540 BULKHEAD

FWD CARGO COMPARTMENT BULKHEAD BS 540 BTWN STR 22L AND 23L CHORD HORIZ FLANGE WITH CORROSION

(THE CORROSION REQUIRES A MAJOR REPAIR).

Z6WR0052010	BOEING	BOEING	RING	WORN
8/31/2010	737705		315A22225	THRUST REVERSER

REFERENCE SERVICE BULLETIN 737-78-1072, 20MAR2002, REV 00. THE 315A2222-5 CASCADE RING ASSEMBLY IS WORN AND HAS MATERIAL MISSING MEASURING 1.15 INBOARD / OTDB X .16 FWD / AFT X .0085 DEEP ON THE LOWER END FROM CONTACT WITH THE 315A2563-7 LOWER ATTACH FITTING. THE 315A2563-7 LOWER ATTACH FITTING HAS WEAR MEASURING 1.35 X .070 DEEP C/T THE FORWARD UPPER FLANGE. THERE ARE AREAS OF MATERIAL WEAR / GOUGING WITH LARGEST MEASURING APPROX .80 X .40 X .060 DEEP WITHIN THE 315A2222-5 RING ASSEMBLY INBOARD RADIUS. THE AFT MOST BACB30LE6K29 BOLT C/T THE 315A2222-5 CASCADE RING ASSEMBLY AND 315A2402-5 LATCH BEAM FITTING IS MISSING AND THE OPEN HOLE IS ELONGATED MEASURING .514 X .417 ON OUTBOARD SIDE OF -1 BEAM AND .499 X .438 ON INBOARD SIDE OF -1 BEAM. HOLE SHOULD MEASURE .4040 / .4160. THE FWD MOST BACB30LE6K29 BOLT C/T THE 315A2222-5 CASCADE RING ASSEMBLY AND 315A2402-5 LATCH BEAM ASSEMBLY IS SHEARED IN TWO AT THE FAYING SURFACES OF THE -5 RING AND -1 BEAM. ALSO, C/T THE SAME HOLE LOCATION, THERE IS AN APPROX .800 DIA X .005 AREA OF WEAR, (RESEMBLING A COUNTERBORE) AROUND THE HOLE C/T THE -1 BEAM INBOARD SIDE. AFTER REMOVAL OF THE SHEARED BOLT, THE OPEN HOLE IS ELONGATED MEASURING .377 / .392 ON OUTBOARD SIDE OF -1 BEAM AND .377 DIA. ON INBOARD SIDE OF -1 BEAM. HOLE SHOULD MEASURE .3750 / .379. UNABLE TO INSPECT BORES DUE TO OUT OF ROUND CONDITION. EDDY CURRENT INSPECTION PER NDT MANUAL REVEALS NO CRACK-LIKE INDICATIONS ON THE INBOARD OR OUTBOARD SURFACES. UNABLE TO INSPECT BORES DUE TO OUT OF ROUND CONDITION.

2010F00201	BOEING		BATTERY PACK	WEAK
9/1/2010	757200		EPU301	EMERGENCY LIGHTS

DURING TEST, FOUND EMERGENCY PATH LIGHTS WEAK AT ROWS 25DEF TO 29DEF. REPLACED BATTERY PACK IAW MM, OPS CHECK GOOD.

2010FA0000951	BOEING	CONT	CARBURETOR	CARBONED
9/7/2010	A75N1	W6706N	NAR6D	ENGINE

DURING ANNUAL INSP, FOUND ENG WOULD NOT SHUTDOWN BY CLOSING THE MIXTURE. THEN FOUND THAT CARBURETOR WAS LEAKING FUEL WITH THE MIXTURE CLOSED. REMOVED INTAKE AND CARBURETOR AND FOUND SIGNIFICANT CARBON AND SOOT IN THE NECK ON THE VENTURI, AS WELL AS, IN THE INTAKE. ALL SPARK PLUGS SHOWED SIGNS OF FOWLING WITH SIGNIFICANT SOOT PRESENT. FURTHER INVESTIGATION REVEALED IMPROPER RIGGING OF CARBURETOR THROTTLE CONTROLS AND INCORRECT ROD LENGTHS OF CONNECTING RODS FROM FWD COCKPIT CONTROLS TO FIRST BELLCRANK FWD OF FIREWALL. AT LEAST 2 CONTROL RODS WERE LENGTHENED BEYOND THE WITNESS HOLES. THROTTLE CONTROL IN BOTH DIRECTIONS WERE PREVENTED FROM REACHING FULL TRAVEL BY AIRFRAME STRUCTURE. ALSO FOUND WORN BELLCRANK IN THROTTLE. AFTER DISCONNECTING MIXTURE AND DRAINING CARBURETOR OF FUEL, CARBURETOR FILLED WITH FUEL IN THE IDLE CUTOFF POSITION WITH FUEL ON.

2010FA0000921	BOEING	WRIGHT	INSULATOR	FRAGMENTED
7/14/2010	B17G	R182097	A29589	MLG MOTOR

THE LANDING GEAR DOWN POST "F" TERMINAL, FIELD COIL SHORTED TO GROUND INSIDE THE LT MLG MOTOR ASSY. REPAIR FACILITY WAS CONSULTED AS TO THE PROBABLE CAUSE OF THE ERMINAL INSULATOR FAILURE. THEY INDICATED EITHER OVER-TIGHTENING OF THE TERMINAL HARDWARE OR DAMAGE TO THE TERMINAL INSULATOR DURING SHIPMENT OR STORAGE. TERMINAL GUARDS ARE NOW EMPLOYED.

2010FA0000908	BOMBDR		TIRE	BULGED
8/27/2010	BD1001A10		269K431	MLG

DURING PRE-FLIGHT INSP FOUND GOLFBALL SIZE BULDGE ON THE RT INBD (NR 3) TIRE LOCATED ON INNER SIDEWALL NEAR WHERE THE SIDEWALL AND THE TREAD CAP MEET. TIRE HAS 343.6 HRS AND 139 LANDINGS SINCE NEW. THIS IS THE THIRD OCCURANCE ON THIS ACFT ON PN 269K43-1 TIRES.

2010FA0000844	CESSNA	LYC	CONTACTOR	STUCK
8/16/2010	172M	O320*	111138D	STARTER

START CONTACTOR STUCK IN CLOSED POSITION. TURNED MASTER ON AND STARTER MOTOR WOULD ENGAGE,

HAVE TO TURN MASTER OFF TO STOP STARTER. THIS CONTACTOR WAS CHANGED 8 MONTHS AGO FOR SAME PROBLEM. HAVE HAD SAME PROBLEM ON OTHER MAKES OF ACFT IN THE PAST. SEEMS TO COINCIDE WITH THE USE OF HIGH TORQUE STARTERS. VERY DANGEROUS.

2010FA0000959	CESSNA	LYC	BULKHEAD	CRACKED
8/25/2010	172R	IO360L2A	051348811	FWD FUSLAGE

CRACK FOUND ON UPPER FWD SECTION OF THE LT BULKHEAD ASSY, DIRECTLY UNDER THE PILOT`S RUDDER PEDALS. CRACK DISCOVERED DURING A 100 HR INSP.

2010FA0000958	CESSNA	LYC	BULKHEAD	CRACKED
8/11/2010	172R	IO360L2A	051348811	FUSELAGE

CRACK FOUND ON UPPER FWD SECTION OF THE LT BULKHEAD ASSY, WHERE BULKHEAD ATTACHES TO FIREWALL. DIRECTLY UNDER THE PILOTS RUDDER PEDALS. CRACK DISCOVERED DURING A 100 HR INSPECTION.

YN8R11226	CESSNA		HOSE	SPLIT
9/3/2010	172S		S14956	FUEL SYSTEM

UPON VISUAL INSP FOUND FUEL HOSES TO BE CRACKED. HOSE BATCH CODE NR 062308B, 17 PIECES.

2010FA0000969	CESSNA	LYC	CONTROL CABLE	FRAYED
8/23/2010	172S	IO360L2A	0510105360	AILERON

(BF8R) CABIN OVERHEAD CTR PANEL WAS REMOVED FOR PROGRESSIVE INSP. DURING FLAP & AILERON CABLE INSPECTION, FLAT SPOTS WERE NOTICED ON 2 AILERON CONTROL CABLES. ROLLED THE CABLES FOR BETTER VIEW OF CONTACT POINT WITH PULLEYS, WE WERE ABLE TO CATCH FRAYED WIRES WITH A RAG AND COULD SEE A SUBSTANTIAL GROOVE IN THE CARRY-THRU CABLE. CABLE TENSIONS WERE WITH PROPER SPECS AND THE AREA WAS CLEAN & FREE OF ANY DIRT/DEBRIS. ALSO, THE PLASTIC PULLEYS WERE INSPECTED, THEY WERE CLEAN AND FREE TO ROLL. THIS PROBLEM SEEMS TO BE HAPPENING DURING NORMAL FLIGHT TRAINING SCHOOL USE AND HAS BEEN NOTICED TO BE HAPPENING WITH ALL OF OUR ACFT WITH SIMILAR ACFT TT. WE FEEL THE CAUSE OF THE PROBLEM CAN BE ATTRIBUTED TO THE PULLEYS, THEY ARE MADE FROM A HARD WHITE PLASTIC MATERIAL. THE BRAIDED STAINLESS STEEL CABLES ARE RUBBING AGAINST THE PULLELYS INSTEAD OF ROLLING ON THEM. THIS IS CAUSING THE CABLES TO FLAT SPOT AT FIRST AND THEN CUT A GROOVE DEEP INTO THE CABLE. ALSO, THERE IS ALSO NO NOTICEABLE CABLE DEFLECTION WHERE THE CABLES CONTACT THE PULLEYS, SEEMS LIKE THE PULLEY DIAMETER IS TOO SMALL. SUGGEST REPLACING THE PLASTIC PULLEYS WITH A STANDARD PHENOLIC TYPE PULLEYS THAT ARE USED IN ALL OTHER AREAS OF THE ACFT.

2010FA0000980	CESSNA	LYC	CONTROL CABLE	FRAYED
8/23/2010	172S	IO360L2A	0510105364	AILERON

(BF8R) CABIN OVERHEAD CTR PANEL WAS REMOVED FOR PROGRESSIVE INSP. DURING FLAP & AILERON CABLE INSPECTION, FLAT SPOTS WERE NOTICED ON 2 AILERON CONTROL CABLES. ROLLED THE CABLES FOR BETTER VIEW OF CONTACT POINT WITH PULLEYS, WE WERE ABLE TO CATCH FRAYED WIRES WITH A RAG AND COULD SEE A SUBSTANTIAL GROOVE IN THE CARRY-THRU CABLE. CABLE TENSIONS WERE WITH PROPER SPECS AND THE AREA WAS CLEAN & FREE OF ANY DIRT/DEBRIS. ALSO, THE PLASTIC PULLEYS WERE INSPECTED, THEY WERE CLEAN AND FREE TO ROLL. THIS PROBLEM SEEMS TO BE HAPPENING DURING NORMAL FLIGHT TRAINING SCHOOL USE AND HAS BEEN NOTICED TO BE HAPPENING WITH ALL OF OUR ACFT WITH SIMILAR ACFT TT. WE FEEL THE CAUSE OF THE PROBLEM CAN BE ATTRIBUTED TO THE PULLEYS, THEY ARE MADE FROM A HARD WHITE PLASTIC MATERIAL. THE BRAIDED STAINLESS STEEL CABLES ARE RUBBING AGAINST THE PULLELYS INSTEAD OF ROLLING ON THEM. THIS IS CAUSING THE CABLES TO FLAT SPOT AT FIRST AND THEN CUT A GROOVE DEEP INTO THE CABLE. ALSO, THERE IS ALSO NO NOTICEABLE CABLE DEFLECTION WHERE THE CABLES CONTACT THE PULLEYS, SEEMS LIKE THE PULLEY DIAMETER IS TOO SMALL. SUGGEST REPLACING THE PLASTIC PULLEYS WITH A STANDARD PHENOLIC TYPE PULLEYS THAT ARE USED IN ALL OTHER AREAS OF THE ACFT.

2010FA0000968	CESSNA	LYC	CONTROL CABLE	FRAYED
8/23/2010	172S	IO360L2A	0510105364	AILERON

(BF8R) CABIN OVERHEAD CTR PANEL WAS REMOVED FOR PROGRESSIVE INSP. DURING FLAP & AILERON CABLE

INSPECTION, FLAT SPOTS WERE NOTICED ON 2 AILERON CONTROL CABLES. ROLLED THE CABLES FOR BETTER VIEW OF CONTACT POINT WITH PULLEYS, WE WERE ABLE TO CATCH FRAYED WIRES WITH A RAG AND COULD SEE A SUBSTANTIAL GROOVE IN THE CARRY-THRU CABLE. CABLE TENSIONS WERE WITH PROPER SPECS AND THE AREA WAS CLEAN & FREE OF ANY DIRT/DEBRIS. ALSO, THE PLASTIC PULLEYS WERE INSPECTED, THEY WERE CLEAN AND FREE TO ROLL. THIS PROBLEM SEEMS TO BE HAPPENING DURING NORMAL FLIGHT TRAINING SCHOOL USE AND HAS BEEN NOTICED TO BE HAPPENING WITH ALL OF OUR ACFT WITH SIMILAR ACFT TT. WE FEEL THE CAUSE OF THE PROBLEM CAN BE ATTRIBUTED TO THE PULLEYS, THEY ARE MADE FROM A HARD WHITE PLASTIC MATERIAL. THE BRAIDED STAINLESS STEEL CABLES ARE RUBBING AGAINST THE PULLELYS INSTEAD OF ROLLING ON THEM. THIS IS CAUSING THE CABLES TO FLAT SPOT AT FIRST AND THEN CUT A GROOVE DEEP INTO THE CABLE. ALSO, THERE IS ALSO NO NOTICEABLE CABLE DEFLECTION WHERE THE CABLES CONTACT THE PULLEYS, SEEMS LIKE THE PULLEY DIAMETER IS TOO SMALL. SUGGEST REPLACING THE PLASTIC PULLEYS WITH A STANDARD PHENOLIC TYPE PULLEYS THAT ARE USED IN ALL OTHER AREAS OF THE ACFT.

2010FA0000939	CESSNA	LYC	CONTROL CABLE	FRAYED
8/23/2010	172S	IO360L2A	0510105360	OVERHEAD CABIN

CABIN OVERHEAD CTR PANEL WAS REMOVED OR PROGRESSIVE INSP. DURING FLAP & AILERON CABLE INSP, FLAT SPOTS WERE NOTICED ON 3 AILERON CONTROL CABLES. ROLLED THE CABLES FOR BETTER VIEW OF CONTACT POINT WITH PULLEYS, WE WERE ABLE TO CATCH FRAYED WIRES WITH A RAG AND COULD SEE A SUBSTANTIAL GROOVE IN THE CARRY-THRU CABLE. CABLE TENSIONS WERE WITHIN PROPER SPECS AND THE AREA WAS CLEAN AND FREE OF ANY DIRT/DEBRIS. ALSO THE PLASTIC PULLEYS WERE INSPECTED, THEY WERE CLEAN AND FREE TO ROLL. THIS PROBLEM SEEMS TO BE HAPPENING WITH ALL OF OUR ACFT WITH SIMILAR ACFT TT. WE FEEL THE CAUSE OF THE PROBLEM CAN BE ATTRIBUTED TO THE PULLEYS, THEY ARE MADE FROM A HARD WHITE PLASTIC MATERIAL. THE BRAIDED STAINLESS STEEL CABLES ARE RUBBING AGAINST THE PULLEYS INSTEAD OF ROLLING ON THEM. THIS IS CAUSING THE CABLES TO FLAT SPOT AT FIRST AND THEN CUT A GROOVE DEEP INTO THE CABLE. ALSO THERE IS NO NOTICEABLE CABLE DEFLECTION WHERE THE CABLES CONTACT THE PULLEYS, SEEMS LIKE THE PULLEY DIAMETER IS TOO SMALL. SUGGEST REPLACING THE PLASTIC PULLEYS WITH A STANDARD PHENOLIC TYPE PULLEYS THAT ARE USED IN ALL OTHER AREAS OF THE ACFT.

201001089	CESSNA	LYC	CONTROL CABLE	FRAYED
8/23/2010	172S	IO360L2A	0510105365	AILERON

(BF8R) CABIN OVERHEAD CTR PANEL WAS REMOVED FOR PROGRESSIVE INSP. DURING FLAP & AILERON CABLE INSPECTION, FLAT SPOTS WERE NOTICED ON 2 AILERON CONTROL CABLES. ROLLED THE CABLES FOR BETTER VIEW OF CONTACT POINT WITH PULLEYS, WE WERE ABLE TO CATCH FRAYED WIRES WITH A RAG AND COULD SEE A SUBSTANTIAL GROOVE IN THE CARRY-THRU CABLE. CABLE TENSIONS WERE WITH PROPER SPECS AND THE AREA WAS CLEAN & FREE OF ANY DIRT/DEBRIS. ALSO, THE PLASTIC PULLEYS WERE INSPECTED, THEY WERE CLEAN AND FREE TO ROLL. THIS PROBLEM SEEMS TO BE HAPPENING DURING NORMAL FLIGHT TRAINING SCHOOL USE AND HAS BEEN NOTICED TO BE HAPPENING WITH ALL OF OUR ACFT WITH SIMILAR ACFT TT. WE FEEL THE CAUSE OF THE PROBLEM CAN BE ATTRIBUTED TO THE PULLEYS, THEY ARE MADE FROM A HARD WHITE PLASTIC MATERIAL. THE BRAIDED STAINLESS STEEL CABLES ARE RUBBING AGAINST THE PULLELYS INSTEAD OF ROLLING ON THEM. THIS IS CAUSING THE CABLES TO FLAT SPOT AT FIRST AND THEN CUT A GROOVE DEEP INTO THE CABLE. ALSO, THERE IS ALSO NO NOTICEABLE CABLE DEFLECTION WHERE THE CABLES CONTACT THE PULLEYS, SEEMS LIKE THE PULLEY DIAMETER IS TOO SMALL. SUGGEST REPLACING THE PLASTIC PULLEYS WITH A STANDARD PHENOLIC TYPE PULLEYS THAT ARE USED IN ALL OTHER AREAS OF THE ACFT.

2010FA0000988	CESSNA	LYC	CONTROL CABLE	FRAYED
8/23/2010	172S	IO360L2A	0510105362	AILERON

(BF8R) CABIN OVERHEAD CTR PANEL WAS REMOVED FOR PROGRESSIVE INSP. DURING FLAP & AILERON CABLE INSPECTION, FLAT SPOTS WERE NOTICED ON 2 AILERON CONTROL CABLES. ROLLED THE CABLES FOR BETTER VIEW OF CONTACT POINT WITH PULLEYS, WE WERE ABLE TO CATCH FRAYED WIRES WITH A RAG AND COULD SEE A SUBSTANTIAL GROOVE IN THE CARRY-THRU CABLE. CABLE TENSIONS WERE WITH PROPER SPECS AND THE AREA WAS CLEAN & FREE OF ANY DIRT/DEBRIS. ALSO, THE PLASTIC PULLEYS WERE INSPECTED, THEY WERE CLEAN AND FREE TO ROLL. THIS PROBLEM SEEMS TO BE HAPPENING DURING NORMAL FLIGHT TRAINING SCHOOL USE AND HAS BEEN NOTICED TO BE HAPPENING WITH ALL OF OUR ACFT WITH SIMILAR ACFT TT. WE FEEL THE CAUSE OF THE PROBLEM CAN BE ATTRIBUTED TO THE PULLEYS, THEY ARE MADE FROM A HARD WHITE PLASTIC MATERIAL. THE BRAIDED STAINLESS STEEL CABLES ARE RUBBING AGAINST THE PULLELYS

INSTEAD OF ROLLING ON THEM. THIS IS CAUSING THE CABLES TO FLAT SPOT AT FIRST AND THEN CUT A GROOVE DEEP INTO THE CABLE. ALSO, THERE IS ALSO NO NOTICEABLE CABLE DEFLECTION WHERE THE CABLES CONTACT THE PULLEYS, SEEMS LIKE THE PULLEY DIAMETER IS TOO SMALL. SUGGEST REPLACING THE PLASTIC PULLEYS WITH A STANDARD PHENOLIC TYPE PULLEYS THAT ARE USED IN ALL OTHER AREAS OF THE ACFT.

201001095	CESSNA	LYC	CONTROL CABLE	FRAYED
8/23/2010	172S	IO360L2A	0510105364	AILERON

CABIN OVERHEAD CTR PANEL WAS REMOVED FOR PROGRESSIVE INSP. DURING FLAP & AILERON CABLE INSPECTION, FLAT SPOTS WERE NOTICED ON 2 AILERON CONTROL CABLES. ROLLED THE CABLES FOR BETTER VIEW OF CONTACT POINT WITH PULLEYS, WE WERE ABLE TO CATCH FRAYED WIRES WITH A RAG AND COULD SEE A SUBSTANTIAL GROOVE IN THE CARRY-THRU CABLE. CABLE TENSIONS WERE WITH PROPER SPECS AND THE AREA WAS CLEAN & FREE OF ANY DIRT/DEBRIS. ALSO, THE PLASTIC PULLEYS WERE INSPECTED, THEY WERE CLEAN AND FREE TO ROLL. THIS PROBLEM SEEMS TO BE HAPPENING DURING NORMAL FLIGHT TRAINING SCHOOL USE AND HAS BEEN NOTICED TO BE HAPPENING WITH ALL OF OUR ACFT WITH SIMILAR ACFT TT. WE FEEL THE CAUSE OF THE PROBLEM CAN BE ATTRIBUTED TO THE PULLEYS, THEY ARE MADE FROM A HARD WHITE PLASTIC MATERIAL. THE BRAIDED STAINLESS STEEL CABLES ARE RUBBING AGAINST THE PULLELYS INSTEAD OF ROLLING ON THEM. THIS IS CAUSING THE CABLES TO FLAT SPOT AT FIRST AND THEN CUT A GROOVE DEEP INTO THE CABLE. ALSO, THERE IS ALSO NO NOTICEABLE CABLE DEFLECTION WHERE THE CABLES CONTACT THE PULLEYS, SEEMS LIKE THE PULLEY DIAMETER IS TOO SMALL. SUGGEST REPLACING THE PLASTIC PULLEYS WITH A STANDARD PHENOLIC TYPE PULLEYS THAT ARE USED IN ALL OTHER AREAS OF THE ACFT.

2010FA0000978	CESSNA	LYC	CONTROL CABLE	FRAYED
8/23/2010	172S	IO360L2A	0510105360	AILERON

CABIN OVERHEAD CTR PANEL WAS REMOVED FOR PROGRESSIVE INSP. DURING FLAP & AILERON CABLE INSPECTION, FLAT SPOTS WERE NOTICED ON 2 AILERON CONTROL CABLES. ROLLED THE CABLES FOR BETTER VIEW OF CONTACT POINT WITH PULLEYS, WE WERE ABLE TO CATCH FRAYED WIRES WITH A RAG AND COULD SEE A SUBSTANTIAL GROOVE IN THE CARRY-THRU CABLE. CABLE TENSIONS WERE WITH PROPER SPECS AND THE AREA WAS CLEAN & FREE OF ANY DIRT/DEBRIS. ALSO, THE PLASTIC PULLEYS WERE INSPECTED, THEY WERE CLEAN AND FREE TO ROLL. THIS PROBLEM SEEMS TO BE HAPPENING DURING NORMAL FLIGHT TRAINING SCHOOL USE AND HAS BEEN NOTICED TO BE HAPPENING WITH ALL OF OUR ACFT WITH SIMILAR ACFT TT. WE FEEL THE CAUSE OF THE PROBLEM CAN BE ATTRIBUTED TO THE PULLEYS, THEY ARE MADE FROM A HARD WHITE PLASTIC MATERIAL. THE BRAIDED STAINLESS STEEL CABLES ARE RUBBING AGAINST THE PULLELYS INSTEAD OF ROLLING ON THEM. THIS IS CAUSING THE CABLES TO FLAT SPOT AT FIRST AND THEN CUT A GROOVE DEEP INTO THE CABLE. ALSO, THERE IS ALSO NO NOTICEABLE CABLE DEFLECTION WHERE THE CABLES CONTACT THE PULLEYS, SEEMS LIKE THE PULLEY DIAMETER IS TOO SMALL. SUGGEST REPLACING THE PLASTIC PULLEYS WITH A STANDARD PHENOLIC TYPE PULLEYS THAT ARE USED IN ALL OTHER AREAS OF THE ACFT.

2010FA0000979	CESSNA	LYC	CONTROL CABLE	FRAYED
8/23/2010	172S	IO360L2A	0510105362	AILERON CC

CABIN OVERHEAD CTR PANEL WAS REMOVED FOR PROGRESSIVE INSP. DURING FLAP & AILERON CABLE INSPECTION, FLAT SPOTS WERE NOTICED ON 2 AILERON CONTROL CABLES. ROLLED THE CABLES FOR BETTER VIEW OF CONTACT POINT WITH PULLEYS, WE WERE ABLE TO CATCH FRAYED WIRES WITH A RAG AND COULD SEE A SUBSTANTIAL GROOVE IN THE CARRY-THRU CABLE. CABLE TENSIONS WERE WITH PROPER SPECS AND THE AREA WAS CLEAN & FREE OF ANY DIRT/DEBRIS. ALSO, THE PLASTIC PULLEYS WERE INSPECTED, THEY WERE CLEAN AND FREE TO ROLL. THIS PROBLEM SEEMS TO BE HAPPENING DURING NORMAL FLIGHT TRAINING SCHOOL USE AND HAS BEEN NOTICED TO BE HAPPENING WITH ALL OF OUR ACFT WITH SIMILAR ACFT TT. WE FEEL THE CAUSE OF THE PROBLEM CAN BE ATTRIBUTED TO THE PULLEYS, THEY ARE MADE FROM A HARD WHITE PLASTIC MATERIAL. THE BRAIDED STAINLESS STEEL CABLES ARE RUBBING AGAINST THE PULLELYS INSTEAD OF ROLLING ON THEM. THIS IS CAUSING THE CABLES TO FLAT SPOT AT FIRST AND THEN CUT A GROOVE DEEP INTO THE CABLE. ALSO, THERE IS ALSO NO NOTICEABLE CABLE DEFLECTION WHERE THE CABLES CONTACT THE PULLEYS, SEEMS LIKE THE PULLEY DIAMETER IS TOO SMALL. SUGGEST REPLACING THE PLASTIC PULLEYS WITH A STANDARD PHENOLIC TYPE PULLEYS THAT ARE USED IN ALL OTHER AREAS OF THE ACFT.

201001079	CESSNA	LYC	CONTROL CABLE	FRAYED
8/23/2010	172S	IO360L2A	05010105365	AILERON

CABIN OVERHEAD CTR PANEL WAS REMOVED FOR PROGRESSIVE INSP. DURING FLAP & AILERON CABLE INSPECTION, FLAT SPOTS WERE NOTICED ON 2 AILERON CONTROL CABLES. ROLLED THE CABLES FOR BETTER VIEW OF CONTACT POINT WITH PULLEYS, WE WERE ABLE TO CATCH FRAYED WIRES WITH A RAG AND COULD SEE A SUBSTANTIAL GROOVE IN THE CARRY-THRU CABLE. CABLE TENSIONS WERE WITH PROPER SPECS AND THE AREA WAS CLEAN & FREE OF ANY DIRT/DEBRIS. ALSO, THE PLASTIC PULLEYS WERE INSPECTED, THEY WERE CLEAN AND FREE TO ROLL. THIS PROBLEM SEEMS TO BE HAPPENING DURING NORMAL FLIGHT TRAINING SCHOOL USE AND HAS BEEN NOTICED TO BE HAPPENING WITH ALL OF OUR ACFT WITH SIMILAR ACFT TT. WE FEEL THE CAUSE OF THE PROBLEM CAN BE ATTRIBUTED TO THE PULLEYS, THEY ARE MADE FROM A HARD WHITE PLASTIC MATERIAL. THE BRAIDED STAINLESS STEEL CABLES ARE RUBBING AGAINST THE PULLELYS INSTEAD OF ROLLING ON THEM. THIS IS CAUSING THE CABLES TO FLAT SPOT AT FIRST AND THEN CUT A GROOVE DEEP INTO THE CABLE. ALSO, THERE IS ALSO NO NOTICEABLE CABLE DEFLECTION WHERE THE CABLES CONTACT THE PULLEYS, SEEMS LIKE THE PULLEY DIAMETER IS TOO SMALL. SUGGEST REPLACING THE PLASTIC PULLEYS WITH A STANDARD PHENOLIC TYPE PULLEYS THAT ARE USED IN ALL OTHER AREAS OF THE ACFT.

2010FA0000981	CESSNA	LYC	CONTROL CABLE	FRAYED
8/23/2010	172S	IO360L2A	0510105360	AILERON

CABIN OVERHEAD CTR PANEL WAS REMOVED FOR PROGRESSIVE INSP. DURING FLAP & AILERON CABLE INSPECTION, FLAT SPOTS WERE NOTICED ON 2 AILERON CONTROL CABLES. ROLLED THE CABLES FOR BETTER VIEW OF CONTACT POINT WITH PULLEYS, WE WERE ABLE TO CATCH FRAYED WIRES WITH A RAG AND COULD SEE A SUBSTANTIAL GROOVE IN THE CARRY-THRU CABLE. CABLE TENSIONS WERE WITH PROPER SPECS AND THE AREA WAS CLEAN & FREE OF ANY DIRT/DEBRIS. ALSO, THE PLASTIC PULLEYS WERE INSPECTED, THEY WERE CLEAN AND FREE TO ROLL. THIS PROBLEM SEEMS TO BE HAPPENING DURING NORMAL FLIGHT TRAINING SCHOOL USE AND HAS BEEN NOTICED TO BE HAPPENING WITH ALL OF OUR ACFT WITH SIMILAR ACFT TT. WE FEEL THE CAUSE OF THE PROBLEM CAN BE ATTRIBUTED TO THE PULLEYS, THEY ARE MADE FROM A HARD WHITE PLASTIC MATERIAL. THE BRAIDED STAINLESS STEEL CABLES ARE RUBBING AGAINST THE PULLELYS INSTEAD OF ROLLING ON THEM. THIS IS CAUSING THE CABLES TO FLAT SPOT AT FIRST AND THEN CUT A GROOVE DEEP INTO THE CABLE. ALSO, THERE IS ALSO NO NOTICEABLE CABLE DEFLECTION WHERE THE CABLES CONTACT THE PULLEYS, SEEMS LIKE THE PULLEY DIAMETER IS TOO SMALL. SUGGEST REPLACING THE PLASTIC PULLEYS WITH A STANDARD PHENOLIC TYPE PULLEYS THAT ARE USED IN ALL OTHER AREAS OF THE ACFT.

2010FA0000971	CESSNA	LYC	CONTROL CABLE	FRAYED
8/23/2010	172S	IO360L2A	0510105364	AILERON

CABIN OVERHEAD CTR PANEL WAS REMOVED FOR PROGRESSIVE INSP. DURING FLAP & AILERON CABLE INSPECTION, FLAT SPOTS WERE NOTICED ON 2 AILERON CONTROL CABLES. ROLLED THE CABLES FOR BETTER VIEW OF CONTACT POINT WITH PULLEYS, WE WERE ABLE TO CATCH FRAYED WIRES WITH A RAG AND COULD SEE A SUBSTANTIAL GROOVE IN THE CARRY-THRU CABLE. CABLE TENSIONS WERE WITH PROPER SPECS AND THE AREA WAS CLEAN & FREE OF ANY DIRT/DEBRIS. ALSO, THE PLASTIC PULLEYS WERE INSPECTED, THEY WERE CLEAN AND FREE TO ROLL. THIS PROBLEM SEEMS TO BE HAPPENING DURING NORMAL FLIGHT TRAINING SCHOOL USE AND HAS BEEN NOTICED TO BE HAPPENING WITH ALL OF OUR ACFT WITH SIMILAR ACFT TT. WE FEEL THE CAUSE OF THE PROBLEM CAN BE ATTRIBUTED TO THE PULLEYS, THEY ARE MADE FROM A HARD WHITE PLASTIC MATERIAL. THE BRAIDED STAINLESS STEEL CABLES ARE RUBBING AGAINST THE PULLELYS INSTEAD OF ROLLING ON THEM. THIS IS CAUSING THE CABLES TO FLAT SPOT AT FIRST AND THEN CUT A GROOVE DEEP INTO THE CABLE. ALSO, THERE IS ALSO NO NOTICEABLE CABLE DEFLECTION WHERE THE CABLES CONTACT THE PULLEYS, SEEMS LIKE THE PULLEY DIAMETER IS TOO SMALL. SUGGEST REPLACING THE PLASTIC PULLEYS WITH A STANDARD PHENOLIC TYPE PULLEYS THAT ARE USED IN ALL OTHER AREAS OF THE ACFT.

2010FA0000967	CESSNA	LYC	CONTROL CABLE	FRAYED
8/23/2010	172S	IO360L2A	0510105362	AILERON

CABIN OVERHEAD CTR PANEL WAS REMOVED FOR PROGRESSIVE INSP. DURING FLAP & AILERON CABLE INSPECTION, FLAT SPOTS WERE NOTICED ON 2 AILERON CONTROL CABLES. ROLLED THE CABLES FOR BETTER VIEW OF CONTACT POINT WITH PULLEYS, WE WERE ABLE TO CATCH FRAYED WIRES WITH A RAG AND COULD

SEE A SUBSTANTIAL GROOVE IN THE CARRY-THRU CABLE. CABLE TENSIONS WERE WITH PROPER SPECS AND THE AREA WAS CLEAN & FREE OF ANY DIRT/DEBRIS. ALSO, THE PLASTIC PULLEYS WERE INSPECTED, THEY WERE CLEAN AND FREE TO ROLL. THIS PROBLEM SEEMS TO BE HAPPENING DURING NORMAL FLIGHT TRAINING SCHOOL USE AND HAS BEEN NOTICED TO BE HAPPENING WITH ALL OF OUR ACFT WITH SIMILAR ACFT TT. WE FEEL THE CAUSE OF THE PROBLEM CAN BE ATTRIBUTED TO THE PULLEYS, THEY ARE MADE FROM A HARD WHITE PLASTIC MATERIAL. THE BRAIDED STAINLESS STEEL CABLES ARE RUBBING AGAINST THE PULLELYS INSTEAD OF ROLLING ON THEM. THIS IS CAUSING THE CABLES TO FLAT SPOT AT FIRST AND THEN CUT A GROOVE DEEP INTO THE CABLE. ALSO, THERE IS ALSO NO NOTICEABLE CABLE DEFLECTION WHERE THE CABLES CONTACT THE PULLEYS, SEEMS LIKE THE PULLEY DIAMETER IS TOO SMALL. SUGGEST REPLACING THE PLASTIC PULLEYS WITH A STANDARD PHENOLIC TYPE PULLEYS THAT ARE USED IN ALL OTHER AREAS OF THE ACFT.

201000930	CESSNA	LYC	CONTROL CABLE	FRAYED
8/23/2010	172S	IO360L2A	0510105365	AILERON

CABIN OVERHEAD CTR PANEL WAS REMOVED FOR PROGRESSIVE INSP. DURING FLAP & AILERON CABLE INSPECTION, FLAT SPOTS WERE NOTICED ON 2 AILERON CONTROL CABLES. ROLLED THE CABLES FOR BETTER VIEW OF CONTACT POINT WITH PULLEYS, WE WERE ABLE TO CATCH FRAYED WIRES WITH A RAG AND COULD SEE A SUBSTANTIAL GROOVE IN THE CARRY-THRU CABLE. CABLE TENSIONS WERE WITH PROPER SPECS AND THE AREA WAS CLEAN & FREE OF ANY DIRT/DEBRIS. ALSO, THE PLASTIC PULLEYS WERE INSPECTED, THEY WERE CLEAN AND FREE TO ROLL. THIS PROBLEM SEEMS TO BE HAPPENING DURING NORMAL FLIGHT TRAINING SCHOOL USE AND HAS BEEN NOTICED TO BE HAPPENING WITH ALL OF OUR ACFT WITH SIMILAR ACFT TT. WE FEEL THE CAUSE OF THE PROBLEM CAN BE ATTRIBUTED TO THE PULLEYS, THEY ARE MADE FROM A HARD WHITE PLASTIC MATERIAL. THE BRAIDED STAINLESS STEEL CABLES ARE RUBBING AGAINST THE PULLELYS INSTEAD OF ROLLING ON THEM. THIS IS CAUSING THE CABLES TO FLAT SPOT AT FIRST AND THEN CUT A GROOVE DEEP INTO THE CABLE. ALSO, THERE IS ALSO NO NOTICEABLE CABLE DEFLECTION WHERE THE CABLES CONTACT THE PULLEYS, SEEMS LIKE THE PULLEY DIAMETER IS TOO SMALL. SUGGEST REPLACING THE PLASTIC PULLEYS WITH A STANDARD PHENOLIC TYPE PULLEYS THAT ARE USED IN ALL OTHER AREAS OF THE ACFT.

2010FA0000972	CESSNA	LYC	CONTROL CABLE	FRAYED
8/23/2010	172S	IO360L2A	0510105360	AILERON

CABIN OVERHEAD CTR PANEL WAS REMOVED FOR PROGRESSIVE INSP. DURING FLAP & AILERON CABLE INSPECTION, FLAT SPOTS WERE NOTICED ON 2 AILERON CONTROL CABLES. ROLLED THE CABLES FOR BETTER VIEW OF CONTACT POINT WITH PULLEYS, WE WERE ABLE TO CATCH FRAYED WIRES WITH A RAG AND COULD SEE A SUBSTANTIAL GROOVE IN THE CARRY-THRU CABLE. CABLE TENSIONS WERE WITH PROPER SPECS AND THE AREA WAS CLEAN & FREE OF ANY DIRT/DEBRIS. ALSO, THE PLASTIC PULLEYS WERE INSPECTED, THEY WERE CLEAN AND FREE TO ROLL. THIS PROBLEM SEEMS TO BE HAPPENING DURING NORMAL FLIGHT TRAINING SCHOOL USE AND HAS BEEN NOTICED TO BE HAPPENING WITH ALL OF OUR ACFT WITH SIMILAR ACFT TT. WE FEEL THE CAUSE OF THE PROBLEM CAN BE ATTRIBUTED TO THE PULLEYS, THEY ARE MADE FROM A HARD WHITE PLASTIC MATERIAL. THE BRAIDED STAINLESS STEEL CABLES ARE RUBBING AGAINST THE PULLELYS INSTEAD OF ROLLING ON THEM. THIS IS CAUSING THE CABLES TO FLAT SPOT AT FIRST AND THEN CUT A GROOVE DEEP INTO THE CABLE. ALSO, THERE IS ALSO NO NOTICEABLE CABLE DEFLECTION WHERE THE CABLES CONTACT THE PULLEYS, SEEMS LIKE THE PULLEY DIAMETER IS TOO SMALL. SUGGEST REPLACING THE PLASTIC PULLEYS WITH A STANDARD PHENOLIC TYPE PULLEYS THAT ARE USED IN ALL OTHER AREAS OF THE ACFT.

2010FA0000966	CESSNA	LYC	CONTROL CABLE	FRAYED
8/23/2010	172S	IO360L2A	0510105360	AILERON

CABIN OVERHEAD CTR PANEL WAS REMOVED FOR PROGRESSIVE INSP. DURING FLAP & AILERON CABLE INSPECTION, FLAT SPOTS WERE NOTICED ON 2 AILERON CONTROL CABLES. ROLLED THE CABLES FOR BETTER VIEW OF CONTACT POINT WITH PULLEYS, WE WERE ABLE TO CATCH FRAYED WIRES WITH A RAG AND COULD SEE A SUBSTANTIAL GROOVE IN THE CARRY-THRU CABLE. CABLE TENSIONS WERE WITH PROPER SPECS AND THE AREA WAS CLEAN & FREE OF ANY DIRT/DEBRIS. ALSO, THE PLASTIC PULLEYS WERE INSPECTED, THEY WERE CLEAN AND FREE TO ROLL. THIS PROBLEM SEEMS TO BE HAPPENING DURING NORMAL FLIGHT TRAINING SCHOOL USE AND HAS BEEN NOTICED TO BE HAPPENING WITH ALL OF OUR ACFT WITH SIMILAR ACFT TT. WE FEEL THE CAUSE OF THE PROBLEM CAN BE ATTRIBUTED TO THE PULLEYS, THEY ARE MADE FROM A HARD WHITE PLASTIC MATERIAL. THE BRAIDED STAINLESS STEEL CABLES ARE RUBBING AGAINST THE PULLELYS

INSTEAD OF ROLLING ON THEM. THIS IS CAUSING THE CABLES TO FLAT SPOT AT FIRST AND THEN CUT A GROOVE DEEP INTO THE CABLE. ALSO, THERE IS ALSO NO NOTICEABLE CABLE DEFLECTION WHERE THE CABLES CONTACT THE PULLEYS, SEEMS LIKE THE PULLEY DIAMETER IS TOO SMALL. SUGGEST REPLACING THE PLASTIC PULLEYS WITH A STANDARD PHENOLIC TYPE PULLEYS THAT ARE USED IN ALL OTHER AREAS OF THE ACFT.

201001006	CESSNA	LYC	CONTROL CABLE	FRAYED
8/23/2010	172S	IO360L2A	0510105365	AILERON

CABIN OVERHEAD CTR PANEL WAS REMOVED FOR PROGRESSIVE INSP. DURING FLAP & AILERON CABLE INSPECTION, FLAT SPOTS WERE NOTICED ON 2 AILERON CONTROL CABLES. ROLLED THE CABLES FOR BETTER VIEW OF CONTACT POINT WITH PULLEYS, WE WERE ABLE TO CATCH FRAYED WIRES WITH A RAG AND COULD SEE A SUBSTANTIAL GROOVE IN THE CARRY-THRU CABLE. CABLE TENSIONS WERE WITH PROPER SPECS AND THE AREA WAS CLEAN & FREE OF ANY DIRT/DEBRIS. ALSO, THE PLASTIC PULLEYS WERE INSPECTED, THEY WERE CLEAN AND FREE TO ROLL. THIS PROBLEM SEEMS TO BE HAPPENING DURING NORMAL FLIGHT TRAINING SCHOOL USE AND HAS BEEN NOTICED TO BE HAPPENING WITH ALL OF OUR ACFT WITH SIMILAR ACFT TT. WE FEEL THE CAUSE OF THE PROBLEM CAN BE ATTRIBUTED TO THE PULLEYS, THEY ARE MADE FROM A HARD WHITE PLASTIC MATERIAL. THE BRAIDED STAINLESS STEEL CABLES ARE RUBBING AGAINST THE PULLELYS INSTEAD OF ROLLING ON THEM. THIS IS CAUSING THE CABLES TO FLAT SPOT AT FIRST AND THEN CUT A GROOVE DEEP INTO THE CABLE. ALSO, THERE IS ALSO NO NOTICEABLE CABLE DEFLECTION WHERE THE CABLES CONTACT THE PULLEYS, SEEMS LIKE THE PULLEY DIAMETER IS TOO SMALL. SUGGEST REPLACING THE PLASTIC PULLEYS WITH A STANDARD PHENOLIC TYPE PULLEYS THAT ARE USED IN ALL OTHER AREAS OF THE ACFT. -

---

2010FA0000984	CESSNA	LYC	CONTROL CABLE	FRAYED
8/23/2010	172S	IO360L2A	0510105360	AILERON

CABIN OVERHEAD CTR PANEL WAS REMOVED FOR PROGRESSIVE INSP. DURING FLAP & AILERON CABLE INSPECTION, FLAT SPOTS WERE NOTICED ON 2 AILERON CONTROL CABLES. ROLLED THE CABLES FOR BETTER VIEW OF CONTACT POINT WITH PULLEYS, WE WERE ABLE TO CATCH FRAYED WIRES WITH A RAG AND COULD SEE A SUBSTANTIAL GROOVE IN THE CARRY-THRU CABLE. CABLE TENSIONS WERE WITH PROPER SPECS AND THE AREA WAS CLEAN & FREE OF ANY DIRT/DEBRIS. ALSO, THE PLASTIC PULLEYS WERE INSPECTED, THEY WERE CLEAN AND FREE TO ROLL. THIS PROBLEM SEEMS TO BE HAPPENING DURING NORMAL FLIGHT TRAINING SCHOOL USE AND HAS BEEN NOTICED TO BE HAPPENING WITH ALL OF OUR ACFT WITH SIMILAR ACFT TT. WE FEEL THE CAUSE OF THE PROBLEM CAN BE ATTRIBUTED TO THE PULLEYS, THEY ARE MADE FROM A HARD WHITE PLASTIC MATERIAL. THE BRAIDED STAINLESS STEEL CABLES ARE RUBBING AGAINST THE PULLELYS INSTEAD OF ROLLING ON THEM. THIS IS CAUSING THE CABLES TO FLAT SPOT AT FIRST AND THEN CUT A GROOVE DEEP INTO THE CABLE. ALSO, THERE IS ALSO NO NOTICEABLE CABLE DEFLECTION WHERE THE CABLES CONTACT THE PULLEYS, SEEMS LIKE THE PULLEY DIAMETER IS TOO SMALL. SUGGEST REPLACING THE PLASTIC PULLEYS WITH A STANDARD PHENOLIC TYPE PULLEYS THAT ARE USED IN ALL OTHER AREAS OF THE ACFT.

2010FA0000974	CESSNA	LYC	CONTROL CABLE	FRAYED
8/23/2010	172S	IO360L2A	0510105364	AILERON

(BF8R) CABIN OVERHEAD CTR PANEL WAS REMOVED FOR PROGRESSIVE INSP. DURING FLAP & AILERON CABLE INSPECTION, FLAT SPOTS WERE NOTICED ON 2 AILERON CONTROL CABLES. ROLLED THE CABLES FOR BETTER VIEW OF CONTACT POINT WITH PULLEYS, WE WERE ABLE TO CATCH FRAYED WIRES WITH A RAG AND COULD SEE A SUBSTANTIAL GROOVE IN THE CARRY-THRU CABLE. CABLE TENSIONS WERE WITH PROPER SPECS AND THE AREA WAS CLEAN & FREE OF ANY DIRT/DEBRIS. ALSO, THE PLASTIC PULLEYS WERE INSPECTED, THEY WERE CLEAN AND FREE TO ROLL. THIS PROBLEM SEEMS TO BE HAPPENING DURING NORMAL FLIGHT TRAINING SCHOOL USE AND HAS BEEN NOTICED TO BE HAPPENING WITH ALL OF OUR ACFT WITH SIMILAR ACFT TT. WE FEEL THE CAUSE OF THE PROBLEM CAN BE ATTRIBUTED TO THE PULLEYS, THEY ARE MADE FROM A HARD WHITE PLASTIC MATERIAL. THE BRAIDED STAINLESS STEEL CABLES ARE RUBBING AGAINST THE PULLELYS INSTEAD OF ROLLING ON THEM. THIS IS CAUSING THE CABLES TO FLAT SPOT AT FIRST AND THEN CUT A GROOVE DEEP INTO THE CABLE. ALSO, THERE IS ALSO NO NOTICEABLE CABLE DEFLECTION WHERE THE CABLES CONTACT THE PULLEYS, SEEMS LIKE THE PULLEY DIAMETER IS TOO SMALL. SUGGEST REPLACING THE PLASTIC PULLEYS WITH A STANDARD PHENOLIC TYPE PULLEYS THAT ARE USED IN ALL OTHER AREAS OF THE ACFT.

2010FA0000983	CESSNA	LYC	CONTROL CABLE	FRAYED
8/23/2010	172S	IO360L2A	0510105364	AILERON

(BF8R) CABIN OVERHEAD CTR PANEL WAS REMOVED FOR PROGRESSIVE INSP. DURING FLAP & AILERON CABLE INSPECTION, FLAT SPOTS WERE NOTICED ON 2 AILERON CONTROL CABLES. ROLLED THE CABLES FOR BETTER VIEW OF CONTACT POINT WITH PULLEYS, WE WERE ABLE TO CATCH FRAYED WIRES WITH A RAG AND COULD SEE A SUBSTANTIAL GROOVE IN THE CARRY-THRU CABLE. CABLE TENSIONS WERE WITH PROPER SPECS AND THE AREA WAS CLEAN & FREE OF ANY DIRT/DEBRIS. ALSO, THE PLASTIC PULLEYS WERE INSPECTED, THEY WERE CLEAN AND FREE TO ROLL. THIS PROBLEM SEEMS TO BE HAPPENING DURING NORMAL FLIGHT TRAINING SCHOOL USE AND HAS BEEN NOTICED TO BE HAPPENING WITH ALL OF OUR ACFT WITH SIMILAR ACFT TT. WE FEEL THE CAUSE OF THE PROBLEM CAN BE ATTRIBUTED TO THE PULLEYS, THEY ARE MADE FROM A HARD WHITE PLASTIC MATERIAL. THE BRAIDED STAINLESS STEEL CABLES ARE RUBBING AGAINST THE PULLELYS INSTEAD OF ROLLING ON THEM. THIS IS CAUSING THE CABLES TO FLAT SPOT AT FIRST AND THEN CUT A GROOVE DEEP INTO THE CABLE. ALSO, THERE IS ALSO NO NOTICEABLE CABLE DEFLECTION WHERE THE CABLES CONTACT THE PULLEYS, SEEMS LIKE THE PULLEY DIAMETER IS TOO SMALL. SUGGEST REPLACING THE PLASTIC PULLEYS WITH A STANDARD PHENOLIC TYPE PULLEYS THAT ARE USED IN ALL OTHER AREAS OF THE ACFT.

2010FA0000975	CESSNA	LYC	CONTROL CABLE	FRAYED
8/23/2010	172S	IO360L2A	0510105360	AILERON

(BF8R) CABIN OVERHEAD CTR PANEL WAS REMOVED FOR PROGRESSIVE INSP. DURING FLAP & AILERON CABLE INSPECTION, FLAT SPOTS WERE NOTICED ON 2 AILERON CONTROL CABLES. ROLLED THE CABLES FOR BETTER VIEW OF CONTACT POINT WITH PULLEYS, WE WERE ABLE TO CATCH FRAYED WIRES WITH A RAG AND COULD SEE A SUBSTANTIAL GROOVE IN THE CARRY-THRU CABLE. CABLE TENSIONS WERE WITH PROPER SPECS AND THE AREA WAS CLEAN & FREE OF ANY DIRT/DEBRIS. ALSO, THE PLASTIC PULLEYS WERE INSPECTED, THEY WERE CLEAN AND FREE TO ROLL. THIS PROBLEM SEEMS TO BE HAPPENING DURING NORMAL FLIGHT TRAINING SCHOOL USE AND HAS BEEN NOTICED TO BE HAPPENING WITH ALL OF OUR ACFT WITH SIMILAR ACFT TT. WE FEEL THE CAUSE OF THE PROBLEM CAN BE ATTRIBUTED TO THE PULLEYS, THEY ARE MADE FROM A HARD WHITE PLASTIC MATERIAL. THE BRAIDED STAINLESS STEEL CABLES ARE RUBBING AGAINST THE PULLELYS INSTEAD OF ROLLING ON THEM. THIS IS CAUSING THE CABLES TO FLAT SPOT AT FIRST AND THEN CUT A GROOVE DEEP INTO THE CABLE. ALSO, THERE IS ALSO NO NOTICEABLE CABLE DEFLECTION WHERE THE CABLES CONTACT THE PULLEYS, SEEMS LIKE THE PULLEY DIAMETER IS TOO SMALL. SUGGEST REPLACING THE PLASTIC PULLEYS WITH A STANDARD PHENOLIC TYPE PULLEYS THAT ARE USED IN ALL OTHER AREAS OF THE ACFT.

2010FA0000986	CESSNA	LYC	CONTROL CABLE	FRAYED
8/23/2010	172S	IO360L2A	0510105364	AILERON

(BF8R) CABIN OVERHEAD CTR PANEL WAS REMOVED FOR PROGRESSIVE INSP. DURING FLAP & AILERON CABLE INSPECTION, FLAT SPOTS WERE NOTICED ON 2 AILERON CONTROL CABLES. ROLLED THE CABLES FOR BETTER VIEW OF CONTACT POINT WITH PULLEYS, WE WERE ABLE TO CATCH FRAYED WIRES WITH A RAG AND COULD SEE A SUBSTANTIAL GROOVE IN THE CARRY-THRU CABLE. CABLE TENSIONS WERE WITH PROPER SPECS AND THE AREA WAS CLEAN & FREE OF ANY DIRT/DEBRIS. ALSO, THE PLASTIC PULLEYS WERE INSPECTED, THEY WERE CLEAN AND FREE TO ROLL. THIS PROBLEM SEEMS TO BE HAPPENING DURING NORMAL FLIGHT TRAINING SCHOOL USE AND HAS BEEN NOTICED TO BE HAPPENING WITH ALL OF OUR ACFT WITH SIMILAR ACFT TT. WE FEEL THE CAUSE OF THE PROBLEM CAN BE ATTRIBUTED TO THE PULLEYS, THEY ARE MADE FROM A HARD WHITE PLASTIC MATERIAL. THE BRAIDED STAINLESS STEEL CABLES ARE RUBBING AGAINST THE PULLELYS INSTEAD OF ROLLING ON THEM. THIS IS CAUSING THE CABLES TO FLAT SPOT AT FIRST AND THEN CUT A GROOVE DEEP INTO THE CABLE. ALSO, THERE IS ALSO NO NOTICEABLE CABLE DEFLECTION WHERE THE CABLES CONTACT THE PULLEYS, SEEMS LIKE THE PULLEY DIAMETER IS TOO SMALL. SUGGEST REPLACING THE PLASTIC PULLEYS WITH A STANDARD PHENOLIC TYPE PULLEYS THAT ARE USED IN ALL OTHER AREAS OF THE ACFT.

201001094	CESSNA	LYC	CONTROL CABLE	FRAYED
8/23/2010	172S	IO360L2A	0510105364	AILERON

(BF8R) CABIN OVERHEAD CTR PANEL WAS REMOVED FOR PROGRESSIVE INSP. DURING FLAP & AILERON CABLE INSPECTION, FLAT SPOTS WERE NOTICED ON 2 AILERON CONTROL CABLES. ROLLED THE CABLES FOR BETTER VIEW OF CONTACT POINT WITH PULLEYS, WE WERE ABLE TO CATCH FRAYED WIRES WITH A RAG AND COULD

SEE A SUBSTANTIAL GROOVE IN THE CARRY-THRU CABLE. CABLE TENSIONS WERE WITH PROPER SPECS AND THE AREA WAS CLEAN & FREE OF ANY DIRT/DEBRIS. ALSO, THE PLASTIC PULLEYS WERE INSPECTED, THEY WERE CLEAN AND FREE TO ROLL. THIS PROBLEM SEEMS TO BE HAPPENING DURING NORMAL FLIGHT TRAINING SCHOOL USE AND HAS BEEN NOTICED TO BE HAPPENING WITH ALL OF OUR ACFT WITH SIMILAR ACFT TT. WE FEEL THE CAUSE OF THE PROBLEM CAN BE ATTRIBUTED TO THE PULLEYS, THEY ARE MADE FROM A HARD WHITE PLASTIC MATERIAL. THE BRAIDED STAINLESS STEEL CABLES ARE RUBBING AGAINST THE PULLELYS INSTEAD OF ROLLING ON THEM. THIS IS CAUSING THE CABLES TO FLAT SPOT AT FIRST AND THEN CUT A GROOVE DEEP INTO THE CABLE. ALSO, THERE IS ALSO NO NOTICEABLE CABLE DEFLECTION WHERE THE CABLES CONTACT THE PULLEYS, SEEMS LIKE THE PULLEY DIAMETER IS TOO SMALL. SUGGEST REPLACING THE PLASTIC PULLEYS WITH A STANDARD PHENOLIC TYPE PULLEYS THAT ARE USED IN ALL OTHER AREAS OF THE ACFT.

2010FA0000976	CESSNA	LYC	CONTROL CABLE	FRAYED
8/23/2010	172S	IO360L2A	0510105362	AILERON

(BF8R) CABIN OVERHEAD CTR PANEL WAS REMOVED FOR PROGRESSIVE INSP. DURING FLAP & AILERON CABLE INSPECTION, FLAT SPOTS WERE NOTICED ON 2 AILERON CONTROL CABLES. ROLLED THE CABLES FOR BETTER VIEW OF CONTACT POINT WITH PULLEYS, WE WERE ABLE TO CATCH FRAYED WIRES WITH A RAG AND COULD SEE A SUBSTANTIAL GROOVE IN THE CARRY-THRU CABLE. CABLE TENSIONS WERE WITH PROPER SPECS AND THE AREA WAS CLEAN & FREE OF ANY DIRT/DEBRIS. ALSO, THE PLASTIC PULLEYS WERE INSPECTED, THEY WERE CLEAN AND FREE TO ROLL. THIS PROBLEM SEEMS TO BE HAPPENING DURING NORMAL FLIGHT TRAINING SCHOOL USE AND HAS BEEN NOTICED TO BE HAPPENING WITH ALL OF OUR ACFT WITH SIMILAR ACFT TT. WE FEEL THE CAUSE OF THE PROBLEM CAN BE ATTRIBUTED TO THE PULLEYS, THEY ARE MADE FROM A HARD WHITE PLASTIC MATERIAL. THE BRAIDED STAINLESS STEEL CABLES ARE RUBBING AGAINST THE PULLELYS INSTEAD OF ROLLING ON THEM. THIS IS CAUSING THE CABLES TO FLAT SPOT AT FIRST AND THEN CUT A GROOVE DEEP INTO THE CABLE. ALSO, THERE IS ALSO NO NOTICEABLE CABLE DEFLECTION WHERE THE CABLES CONTACT THE PULLEYS, SEEMS LIKE THE PULLEY DIAMETER IS TOO SMALL. SUGGEST REPLACING THE PLASTIC PULLEYS WITH A STANDARD PHENOLIC TYPE PULLEYS THAT ARE USED IN ALL OTHER AREAS OF THE ACFT.

2010FA0000987	CESSNA	LYC	CONTROL CABLE	FRAYED
8/23/2010	172S	IO360L2A	0510105360	AILERON

(BF8R) CABIN OVERHEAD CTR PANEL WAS REMOVED FOR PROGRESSIVE INSP. DURING FLAP & AILERON CABLE INSPECTION, FLAT SPOTS WERE NOTICED ON 2 AILERON CONTROL CABLES. ROLLED THE CABLES FOR BETTER VIEW OF CONTACT POINT WITH PULLEYS, WE WERE ABLE TO CATCH FRAYED WIRES WITH A RAG AND COULD SEE A SUBSTANTIAL GROOVE IN THE CARRY-THRU CABLE. CABLE TENSIONS WERE WITH PROPER SPECS AND THE AREA WAS CLEAN & FREE OF ANY DIRT/DEBRIS. ALSO, THE PLASTIC PULLEYS WERE INSPECTED, THEY WERE CLEAN AND FREE TO ROLL. THIS PROBLEM SEEMS TO BE HAPPENING DURING NORMAL FLIGHT TRAINING SCHOOL USE AND HAS BEEN NOTICED TO BE HAPPENING WITH ALL OF OUR ACFT WITH SIMILAR ACFT TT. WE FEEL THE CAUSE OF THE PROBLEM CAN BE ATTRIBUTED TO THE PULLEYS, THEY ARE MADE FROM A HARD WHITE PLASTIC MATERIAL. THE BRAIDED STAINLESS STEEL CABLES ARE RUBBING AGAINST THE PULLELYS INSTEAD OF ROLLING ON THEM. THIS IS CAUSING THE CABLES TO FLAT SPOT AT FIRST AND THEN CUT A GROOVE DEEP INTO THE CABLE. ALSO, THERE IS ALSO NO NOTICEABLE CABLE DEFLECTION WHERE THE CABLES CONTACT THE PULLEYS, SEEMS LIKE THE PULLEY DIAMETER IS TOO SMALL. SUGGEST REPLACING THE PLASTIC PULLEYS WITH A STANDARD PHENOLIC TYPE PULLEYS THAT ARE USED IN ALL OTHER AREAS OF THE ACFT.

2010FA0000938	CESSNA	LYC	CONTROL CABLE	FRAYED
8/23/2010	172S	IO360L2A	0510105364	AILERON

CABIN OVERHEAD CTR PANEL WAS REMOVED OR PROGRESSIVE INSP. DURING FLAP & AILERON CABLE INSP, FLAT SPOTS WERE NOTICED ON 3 AILERON CONTROL CABLES. ROLLED THE CABLES FOR BETTER VIEW OF CONTACT POINT WITH PULLEYS, WE WERE ABLE TO CATCH FRAYED WIRES WITH A RAG AND COULD SEE A SUBSTANTIAL GROOVE IN THE CARRY-THRU CABLE. CABLE TENSIONS WERE WITHIN PROPER SPECS AND THE AREA WAS CLEAN AND FREE OF ANY DIRT/DEBRIS. ALSO THE PLASTIC PULLEYS WERE INSPECTED, THEY WERE CLEAN AND FREE TO ROLL. THIS PROBLEM SEEMS TO BE HAPPENING WITH ALL OF OUR ACFT WITH SIMILAR ACFT TT. WE FEEL THE CAUSE OF THE PROBLEM CAN BE ATTRIBUTED TO THE PULLEYS, THEY ARE MADE FROM A HARD WHITE PLASTIC MATERIAL. THE BRAIDED STAINLESS STEEL CABLES ARE RUBBING AGAINST THE PULLEYS INSTEAD OF ROLLING ON THEM. THIS IS CAUSING THE CABLES TO FLAT SPOT AT FIRST AND THEN CUT

A GROOVE DEEP INTO THE CABLE. ALSO THERE IS NO NOTICEABLE CABLE DEFLECTION WHERE THE CABLES CONTACT THE PULLEYS, SEEMS LIKE THE PULLEY DIAMETER IS TOO SMALL. SUGGEST REPLACING THE PLASTIC PULLEYS WITH A STANDARD PHENOLIC TYPE PULLEYS THAT ARE USED IN ALL OTHER AREAS OF THE ACFT.

2010FA0000982	CESSNA	LYC	CONTROL CABLE	FRAYED
8/23/2010	172S	IO360L2A	0510105362	AILERON

CABIN OVERHEAD CTR PANEL WAS REMOVED FOR PROGRESSIVE INSP. DURING FLAP & AILERON CABLE INSPECTION, FLAT SPOTS WERE NOTICED ON 2 AILERON CONTROL CABLES. ROLLED THE CABLES FOR BETTER VIEW OF CONTACT POINT WITH PULLEYS, WE WERE ABLE TO CATCH FRAYED WIRES WITH A RAG AND COULD SEE A SUBSTANTIAL GROOVE IN THE CARRY-THRU CABLE. CABLE TENSIONS WERE WITH PROPER SPECS AND THE AREA WAS CLEAN & FREE OF ANY DIRT/DEBRIS. ALSO, THE PLASTIC PULLEYS WERE INSPECTED, THEY WERE CLEAN AND FREE TO ROLL. THIS PROBLEM SEEMS TO BE HAPPENING DURING NORMAL FLIGHT TRAINING SCHOOL USE AND HAS BEEN NOTICED TO BE HAPPENING WITH ALL OF OUR ACFT WITH SIMILAR ACFT TT. WE FEEL THE CAUSE OF THE PROBLEM CAN BE ATTRIBUTED TO THE PULLEYS, THEY ARE MADE FROM A HARD WHITE PLASTIC MATERIAL. THE BRAIDED STAINLESS STEEL CABLES ARE RUBBING AGAINST THE PULLELYS INSTEAD OF ROLLING ON THEM. THIS IS CAUSING THE CABLES TO FLAT SPOT AT FIRST AND THEN CUT A GROOVE DEEP INTO THE CABLE. ALSO, THERE IS ALSO NO NOTICEABLE CABLE DEFLECTION WHERE THE CABLES CONTACT THE PULLEYS, SEEMS LIKE THE PULLEY DIAMETER IS TOO SMALL. SUGGEST REPLACING THE PLASTIC PULLEYS WITH A STANDARD PHENOLIC TYPE PULLEYS THAT ARE USED IN ALL OTHER AREAS OF THE ACFT.

201000738	CESSNA	LYC	CONTROL CABLE	FRAYED
8/23/2010	172S	IO360L2A	0510105365	AILERON

CABIN OVERHEAD CTR PANEL WAS REMOVED FOR PROGRESSIVE INSP. DURING FLAP & AILERON CABLE INSPECTION, FLAT SPOTS WERE NOTICED ON 2 AILERON CONTROL CABLES. ROLLED THE CABLES FOR BETTER VIEW OF CONTACT POINT WITH PULLEYS, WE WERE ABLE TO CATCH FRAYED WIRES WITH A RAG AND COULD SEE A SUBSTANTIAL GROOVE IN THE CARRY-THRU CABLE. CABLE TENSIONS WERE WITH PROPER SPECS AND THE AREA WAS CLEAN & FREE OF ANY DIRT/DEBRIS. ALSO, THE PLASTIC PULLEYS WERE INSPECTED, THEY WERE CLEAN AND FREE TO ROLL. THIS PROBLEM SEEMS TO BE HAPPENING DURING NORMAL FLIGHT TRAINING SCHOOL USE AND HAS BEEN NOTICED TO BE HAPPENING WITH ALL OF OUR ACFT WITH SIMILAR ACFT TT. WE FEEL THE CAUSE OF THE PROBLEM CAN BE ATTRIBUTED TO THE PULLEYS, THEY ARE MADE FROM A HARD WHITE PLASTIC MATERIAL. THE BRAIDED STAINLESS STEEL CABLES ARE RUBBING AGAINST THE PULLELYS INSTEAD OF ROLLING ON THEM. THIS IS CAUSING THE CABLES TO FLAT SPOT AT FIRST AND THEN CUT A GROOVE DEEP INTO THE CABLE. ALSO, THERE IS ALSO NO NOTICEABLE CABLE DEFLECTION WHERE THE CABLES CONTACT THE PULLEYS, SEEMS LIKE THE PULLEY DIAMETER IS TOO SMALL. SUGGEST REPLACING THE PLASTIC PULLEYS WITH A STANDARD PHENOLIC TYPE PULLEYS THAT ARE USED IN ALL OTHER AREAS OF THE ACFT.

2010FA0000973	CESSNA	LYC	CONTROL CABLE	FRAYED
8/23/2010	172S	IO360L2A	0510105362	AILERON

CABIN OVERHEAD CTR PANEL WAS REMOVED FOR PROGRESSIVE INSP. DURING FLAP & AILERON CABLE INSPECTION, FLAT SPOTS WERE NOTICED ON 2 AILERON CONTROL CABLES. ROLLED THE CABLES FOR BETTER VIEW OF CONTACT POINT WITH PULLEYS, WE WERE ABLE TO CATCH FRAYED WIRES WITH A RAG AND COULD SEE A SUBSTANTIAL GROOVE IN THE CARRY-THRU CABLE. CABLE TENSIONS WERE WITH PROPER SPECS AND THE AREA WAS CLEAN & FREE OF ANY DIRT/DEBRIS. ALSO, THE PLASTIC PULLEYS WERE INSPECTED, THEY WERE CLEAN AND FREE TO ROLL. THIS PROBLEM SEEMS TO BE HAPPENING DURING NORMAL FLIGHT TRAINING SCHOOL USE AND HAS BEEN NOTICED TO BE HAPPENING WITH ALL OF OUR ACFT WITH SIMILAR ACFT TT. WE FEEL THE CAUSE OF THE PROBLEM CAN BE ATTRIBUTED TO THE PULLEYS, THEY ARE MADE FROM A HARD WHITE PLASTIC MATERIAL. THE BRAIDED STAINLESS STEEL CABLES ARE RUBBING AGAINST THE PULLELYS INSTEAD OF ROLLING ON THEM. THIS IS CAUSING THE CABLES TO FLAT SPOT AT FIRST AND THEN CUT A GROOVE DEEP INTO THE CABLE. ALSO, THERE IS ALSO NO NOTICEABLE CABLE DEFLECTION WHERE THE CABLES CONTACT THE PULLEYS, SEEMS LIKE THE PULLEY DIAMETER IS TOO SMALL. SUGGEST REPLACING THE PLASTIC PULLEYS WITH A STANDARD PHENOLIC TYPE PULLEYS THAT ARE USED IN ALL OTHER AREAS OF THE ACFT.

2010FA0000985	CESSNA	LYC	CONTROL CABLE	FRAYED
8/23/2010	172S	IO360L2A	0510105362	AILERON

(BF8R) CABIN OVERHEAD CTR PANEL WAS REMOVED FOR PROGRESSIVE INSP. DURING FLAP & AILERON CABLE INSPECTION, FLAT SPOTS WERE NOTICED ON 2 AILERON CONTROL CABLES. ROLLED THE CABLES FOR BETTER VIEW OF CONTACT POINT WITH PULLEYS, WE WERE ABLE TO CATCH FRAYED WIRES WITH A RAG AND COULD SEE A SUBSTANTIAL GROOVE IN THE CARRY-THRU CABLE. CABLE TENSIONS WERE WITH PROPER SPECS AND THE AREA WAS CLEAN & FREE OF ANY DIRT/DEBRIS. ALSO, THE PLASTIC PULLEYS WERE INSPECTED, THEY WERE CLEAN AND FREE TO ROLL. THIS PROBLEM SEEMS TO BE HAPPENING DURING NORMAL FLIGHT TRAINING SCHOOL USE AND HAS BEEN NOTICED TO BE HAPPENING WITH ALL OF OUR ACFT WITH SIMILAR ACFT TT. WE FEEL THE CAUSE OF THE PROBLEM CAN BE ATTRIBUTED TO THE PULLEYS, THEY ARE MADE FROM A HARD WHITE PLASTIC MATERIAL. THE BRAIDED STAINLESS STEEL CABLES ARE RUBBING AGAINST THE PULLELYS INSTEAD OF ROLLING ON THEM. THIS IS CAUSING THE CABLES TO FLAT SPOT AT FIRST AND THEN CUT A GROOVE DEEP INTO THE CABLE. ALSO, THERE IS ALSO NO NOTICEABLE CABLE DEFLECTION WHERE THE CABLES CONTACT THE PULLEYS, SEEMS LIKE THE PULLEY DIAMETER IS TOO SMALL. SUGGEST REPLACING THE PLASTIC PULLEYS WITH A STANDARD PHENOLIC TYPE PULLEYS THAT ARE USED IN ALL OTHER AREAS OF THE ACFT.

2010FA0000990	CESSNA	LYC	CONTROL CABLE	FRAYED
8/23/2010	172S	IO360L2A	0510105360	AILERON

(BF8R) CABIN OVERHEAD CTR PANEL WAS REMOVED FOR PROGRESSIVE INSP. DURING FLAP & AILERON CABLE INSPECTION, FLAT SPOTS WERE NOTICED ON 2 AILERON CONTROL CABLES. ROLLED THE CABLES FOR BETTER VIEW OF CONTACT POINT WITH PULLEYS, WE WERE ABLE TO CATCH FRAYED WIRES WITH A RAG AND COULD SEE A SUBSTANTIAL GROOVE IN THE CARRY-THRU CABLE. CABLE TENSIONS WERE WITH PROPER SPECS AND THE AREA WAS CLEAN & FREE OF ANY DIRT/DEBRIS. ALSO, THE PLASTIC PULLEYS WERE INSPECTED, THEY WERE CLEAN AND FREE TO ROLL. THIS PROBLEM SEEMS TO BE HAPPENING DURING NORMAL FLIGHT TRAINING SCHOOL USE AND HAS BEEN NOTICED TO BE HAPPENING WITH ALL OF OUR ACFT WITH SIMILAR ACFT TT. WE FEEL THE CAUSE OF THE PROBLEM CAN BE ATTRIBUTED TO THE PULLEYS, THEY ARE MADE FROM A HARD WHITE PLASTIC MATERIAL. THE BRAIDED STAINLESS STEEL CABLES ARE RUBBING AGAINST THE PULLELYS INSTEAD OF ROLLING ON THEM. THIS IS CAUSING THE CABLES TO FLAT SPOT AT FIRST AND THEN CUT A GROOVE DEEP INTO THE CABLE. ALSO, THERE IS ALSO NO NOTICEABLE CABLE DEFLECTION WHERE THE CABLES CONTACT THE PULLEYS, SEEMS LIKE THE PULLEY DIAMETER IS TOO SMALL. SUGGEST REPLACING THE PLASTIC PULLEYS WITH A STANDARD PHENOLIC TYPE PULLEYS THAT ARE USED IN ALL OTHER AREAS OF THE ACFT.

2010FA0000992	CESSNA	LYC	CONTROL CABLE	FRAYED
8/23/2010	172S	IO360L2A	0510105362	AILERON

(BF8R) CABIN OVERHEAD CTR PANEL WAS REMOVED FOR PROGRESSIVE INSP. DURING FLAP & AILERON CABLE INSPECTION, FLAT SPOTS WERE NOTICED ON 2 AILERON CONTROL CABLES. ROLLED THE CABLES FOR BETTER VIEW OF CONTACT POINT WITH PULLEYS, WE WERE ABLE TO CATCH FRAYED WIRES WITH A RAG AND COULD SEE A SUBSTANTIAL GROOVE IN THE CARRY-THRU CABLE. CABLE TENSIONS WERE WITH PROPER SPECS AND THE AREA WAS CLEAN & FREE OF ANY DIRT/DEBRIS. ALSO, THE PLASTIC PULLEYS WERE INSPECTED, THEY WERE CLEAN AND FREE TO ROLL. THIS PROBLEM SEEMS TO BE HAPPENING DURING NORMAL FLIGHT TRAINING SCHOOL USE AND HAS BEEN NOTICED TO BE HAPPENING WITH ALL OF OUR ACFT WITH SIMILAR ACFT TT. WE FEEL THE CAUSE OF THE PROBLEM CAN BE ATTRIBUTED TO THE PULLEYS, THEY ARE MADE FROM A HARD WHITE PLASTIC MATERIAL. THE BRAIDED STAINLESS STEEL CABLES ARE RUBBING AGAINST THE PULLELYS INSTEAD OF ROLLING ON THEM. THIS IS CAUSING THE CABLES TO FLAT SPOT AT FIRST AND THEN CUT A GROOVE DEEP INTO THE CABLE. ALSO, THERE IS ALSO NO NOTICEABLE CABLE DEFLECTION WHERE THE CABLES CONTACT THE PULLEYS, SEEMS LIKE THE PULLEY DIAMETER IS TOO SMALL. SUGGEST REPLACING THE PLASTIC PULLEYS WITH A STANDARD PHENOLIC TYPE PULLEYS THAT ARE USED IN ALL OTHER AREAS OF THE ACFT.

2010FA0000989	CESSNA	LYC	CONTROL CABLE	FRAYED
8/23/2010	172S	IO360L2A	0510105364	AILERON

(BF8R) CABIN OVERHEAD CTR PANEL WAS REMOVED FOR PROGRESSIVE INSP. DURING FLAP & AILERON CABLE INSPECTION, FLAT SPOTS WERE NOTICED ON 2 AILERON CONTROL CABLES. ROLLED THE CABLES FOR BETTER VIEW OF CONTACT POINT WITH PULLEYS, WE WERE ABLE TO CATCH FRAYED WIRES WITH A RAG AND COULD SEE A SUBSTANTIAL GROOVE IN THE CARRY-THRU CABLE. CABLE TENSIONS WERE WITH PROPER SPECS AND THE AREA WAS CLEAN & FREE OF ANY DIRT/DEBRIS. ALSO, THE PLASTIC PULLEYS WERE INSPECTED, THEY WERE CLEAN AND FREE TO ROLL. THIS PROBLEM SEEMS TO BE HAPPENING DURING NORMAL FLIGHT TRAINING

SCHOOL USE AND HAS BEEN NOTICED TO BE HAPPENING WITH ALL OF OUR ACFT WITH SIMILAR ACFT TT. WE FEEL THE CAUSE OF THE PROBLEM CAN BE ATTRIBUTED TO THE PULLEYS, THEY ARE MADE FROM A HARD WHITE PLASTIC MATERIAL. THE BRAIDED STAINLESS STEEL CABLES ARE RUBBING AGAINST THE PULLELYS INSTEAD OF ROLLING ON THEM. THIS IS CAUSING THE CABLES TO FLAT SPOT AT FIRST AND THEN CUT A GROOVE DEEP INTO THE CABLE. ALSO, THERE IS ALSO NO NOTICEABLE CABLE DEFLECTION WHERE THE CABLES CONTACT THE PULLEYS, SEEMS LIKE THE PULLEY DIAMETER IS TOO SMALL. SUGGEST REPLACING THE PLASTIC PULLEYS WITH A STANDARD PHENOLIC TYPE PULLEYS THAT ARE USED IN ALL OTHER AREAS OF THE ACFT.

201001043	CESSNA	LYC	CONTROL CABLE	FRAYED
8/23/2010	172S	IO360L2A	0510105365	AILERON

(BF8R) CABIN OVERHEAD CTR PANEL WAS REMOVED FOR PROGRESSIVE INSP. DURING FLAP & AILERON CABLE INSPECTION, FLAT SPOTS WERE NOTICED ON 2 AILERON CONTROL CABLES. ROLLED THE CABLES FOR BETTER VIEW OF CONTACT POINT WITH PULLEYS, WE WERE ABLE TO CATCH FRAYED WIRES WITH A RAG AND COULD SEE A SUBSTANTIAL GROOVE IN THE CARRY-THRU CABLE. CABLE TENSIONS WERE WITH PROPER SPECS AND THE AREA WAS CLEAN & FREE OF ANY DIRT/DEBRIS. ALSO, THE PLASTIC PULLEYS WERE INSPECTED, THEY WERE CLEAN AND FREE TO ROLL. THIS PROBLEM SEEMS TO BE HAPPENING DURING NORMAL FLIGHT TRAINING SCHOOL USE AND HAS BEEN NOTICED TO BE HAPPENING WITH ALL OF OUR ACFT WITH SIMILAR ACFT TT. WE FEEL THE CAUSE OF THE PROBLEM CAN BE ATTRIBUTED TO THE PULLEYS, THEY ARE MADE FROM A HARD WHITE PLASTIC MATERIAL. THE BRAIDED STAINLESS STEEL CABLES ARE RUBBING AGAINST THE PULLELYS INSTEAD OF ROLLING ON THEM. THIS IS CAUSING THE CABLES TO FLAT SPOT AT FIRST AND THEN CUT A GROOVE DEEP INTO THE CABLE. ALSO, THERE IS ALSO NO NOTICEABLE CABLE DEFLECTION WHERE THE CABLES CONTACT THE PULLEYS, SEEMS LIKE THE PULLEY DIAMETER IS TOO SMALL. SUGGEST REPLACING THE PLASTIC PULLEYS WITH A STANDARD PHENOLIC TYPE PULLEYS THAT ARE USED IN ALL OTHER AREAS OF THE ACFT.

2010FA0000977	CESSNA	LYC	CONTROL CABLE	FRAYED
8/23/2010	172S	IO360L2A	0510105364	AILERON

CABIN OVERHEAD CTR PANEL REMOVED FOR PROGRESSIVE INSP. DURING FLAP & AILERON CABLE INSPECTION, FLAT SPOTS WERE NOTICED ON 2 AILERON CONTROL CABLES. ROLLED CABLES FOR BETTER VIEW OF CONTACT POINT WITH PULLEYS, WAS ABLE TO CATCH FRAYED WIRES WITH A RAG & COULD SEE A SUBSTANTIAL GROOVE IN THE CARRY-THRU CABLE. CABLE TENSIONS WERE WITH PROPER SPECS & AREA CLEAN & FREE OF DIRT/DEBRIS. PLASTIC PULLEYS INSPECTED, THEY WERE CLEAN & FREE TO ROLL. PROBLEM SEEMS TO HAPPENING DURING NORMAL FLT TRAINING SCHOOL USE & HAS BEEN NOTICED TO BE HAPPENING WITH ALL OF OUR ACFT WITH SIMILAR ACFT TT. CAUSE OF PROBLEM CAN BE ATTRIBUTED TO PULLEYS, THEY ARE MADE FROM A HARD WHITE PLASTIC MATERIAL. BRAIDED STAINLESS STEEL CABLES ARE RUBBING AGAINST PULLELYS INSTEAD OF ROLLING ON THEM. THIS CAUSES THE CABLES TO FLAT SPOT AT FIRST & THEN CUT A GROOVE DEEP INTO THE CABLE. THERE IS ALSO NO NOTICEABLE CABLE DEFLECTION WHERE CABLES CONTACT PULLEYS, SEEMS PULLEY DIAMETER IS TOO SMALL. SUGGEST REPLACING PLASTIC PULLEYS WITH A STANDARD PHENOLIC PULLEYS THAT ARE USED IN ALL OTHER AREAS OF THE ACFT.

BF8R201000987	CESSNA	LYC	CONTROL CABLE	FRAYED
8/23/2010	172S	IO360L2A	0510105365	AILERON

CABIN OVERHEAD CENTER PANEL REMOVED FOR INSP. DURING FLAP & AILERON CABLE INSPECTION, FLAT SPOTS WERE NOTICED ON 2 AILERON CONTROL CABLES. ROLLED CABLES FOR BETTER VIEW OF CONTACT POINT WITH PULLEYS, ABLE TO CATCH FRAYED WIRES WITH A RAG AND COULD SEE A SUBSTANTIAL GROOVE IN THE CARRY-THRU CABLE. CABLE TENSIONS WERE WITH PROPER SPECS AND AREA CLEAN & FREE OF ANY DIRT/DEBRIS. PLASTIC PULLEYS INSPECTED, CLEAN AND FREE TO ROLL. PROBLEM SEEMS TO BE HAPPENING DURING NORMAL FLT TRAINING SCHOOL USE & HAS BEEN NOTICED TO BE HAPPENING WITH ALL OF OUR ACFT WITH SIMILAR ACFT TT. PROBLEM CAN BE ATTRIBUTED TO THE PULLEYS, THEY ARE MADE FROM A HARD WHITE PLASTIC MATERIAL. THE BRAIDED STAINLESS STEEL CABLES ARE RUBBING AGAINST THE PULLEYS INSTEAD OF ROLLING ON THEM. THIS IS CAUSING THE CABLES TO FLAT SPOT AT FIRST AND THEN CUT A GROOVE DEEP INTO THE CABLE. THERE IS ALSO NO NOTICEABLE CABLE DEFLECTION WHERE THE CABLES CONTACT THE PULLEYS, SEEMS LIKE THE PULLEY DIAMETER IS TOO SMALL. SUGGEST REPLACING THE PLASTIC PULLEYS WITH A STANDARD PHENOLIC TYPE PULLEYS THAT ARE USED IN ALL OTHER AREAS OF THE ACFT.

2010FA0000965	CESSNA	LYC	CONTROL CABLE	FRAYED

8/23/2010	172S	IO360L2A	0510105364	AILERON

CABIN OVERHEAD CTR PANEL WAS REMOVED FOR PROGRESSIVE INSP. DURING FLAP & AILERON CABLE INSPECTION, FLAT SPOTS WERE NOTICED ON 2 AILERON CONTROL CABLES. ROLLED THE CABLES FOR BETTER VIEW OF CONTACT POINT WITH PULLEYS, WE WERE ABLE TO CATCH FRAYED WIRES WITH A RAG AND COULD SEE A SUBSTANTIAL GROOVE IN THE CARRY-THRU CABLE. CABLE TENSIONS WERE WITH PROPER SPECS AND THE AREA WAS CLEAN & FREE OF ANY DIRT/DEBRIS. ALSO, THE PLASTIC PULLEYS WERE INSPECTED, THEY WERE CLEAN AND FREE TO ROLL. THIS PROBLEM SEEMS TO BE HAPPENING DURING NORMAL FLIGHT TRAINING SCHOOL USE AND HAS BEEN NOTICED TO BE HAPPENING WITH ALL OF OUR ACFT WITH SIMILAR ACFT TT. WE FEEL THE CAUSE OF THE PROBLEM CAN BE ATTRIBUTED TO THE PULLEYS, THEY ARE MADE FROM A HARD WHITE PLASTIC MATERIAL. THE BRAIDED STAINLESS STEEL CABLES ARE RUBBING AGAINST THE PULLELYS INSTEAD OF ROLLING ON THEM. THIS IS CAUSING THE CABLES TO FLAT SPOT AT FIRST AND THEN CUT A GROOVE DEEP INTO THE CABLE. ALSO, THERE IS ALSO NO NOTICEABLE CABLE DEFLECTION WHERE THE CABLES CONTACT THE PULLEYS, SEEMS LIKE THE PULLEY DIAMETER IS TOO SMALL. SUGGEST REPLACING THE PLASTIC PULLEYS WITH A STANDARD PHENOLIC TYPE PULLEYS THAT ARE USED IN ALL OTHER AREAS OF THE ACFT.

201000338	CESSNA	LYC	CONTROL CABLE	FRAYED
8/23/2010	172S	IO360L2A	0510105365	AILERONS

CABIN OVERHEAD CTR PANEL WAS REMOVED OR PROGRESSIVE INSP. DURING FLAP & AILERON CABLE INSP, FLAT SPOTS WERE NOTICED ON 3 AILERON CONTROL CABLES. ROLLED THE CABLES FOR BETTER VIEW OF CONTACT POINT WITH PULLEYS, WE WERE ABLE TO CATCH FRAYED WIRES WITH A RAG AND COULD SEE A SUBSTANTIAL GROOVE IN THE CARRY-THRU CABLE. CABLE TENSIONS WERE WITHIN PROPER SPECS AND THE AREA WAS CLEAN AND FREE OF ANY DIRT/DEBRIS. ALSO THE PLASTIC PULLEYS WERE INSPECTED, THEY WERE CLEAN AND FREE TO ROLL. THIS PROBLEM SEEMS TO BE HAPPENING WITH ALL OF OUR ACFT WITH SIMILAR ACFT TT. CAUSE OF THE PROBLEM CAN BE ATTRIBUTED TO THE PULLEYS, THEY ARE MADE FROM A HARD WHITE PLASTIC MATERIAL. THE BRAIDED STAINLESS STEEL CABLES ARE RUBBING AGAINST THE PULLEYS INSTEAD OF ROLLING ON THEM. THIS IS CAUSING THE CABLES TO FLAT SPOT AT FIRST AND THEN CUT A GROOVE DEEP INTO THE CABLE. ALSO THERE IS NO NOTICEABLE CABLE DEFLECTION WHERE THE CABLES CONTACT THE PULLEYS, SEEMS LIKE THE PULLEY DIAMETER IS TOO SMALL. SUGGEST REPLACING THE PLASTIC PULLEYS WITH A STANDARD PHENOLIC TYPE PULLEYS THAT ARE USED IN ALL OTHER AREAS OF THE ACFT.

2010FA0000898	CESSNA	CONT	SUPPORT BRACKET	CRACKED
8/18/2010	182Q	O470*	07120591	BATTERY BOX

(AIHR) DURING AN ANNUAL INSP, BATTERY SUPPORT BRACKETS WERE FOUND CRACKED. THEY WERE REPLACED WITH NEW PARTS. SEVERAL ACFT OF THIS SERIES HAVE HAD CRACKED BATTERY SUPPORT BRACKETS. RECOMMEND A STRONGER SUPPORT BRACKET BE DESIGNED.

2010FA0000960	CESSNA		LINE	CRACKED
8/18/2010	310R			WINSHIELD DEICE

DURING REPAIR OF THE WINDSHIELD DE-ICE (ALCOHOL) SYSTEM, FOUND MANIFOLD SUPPLY LINE CRACKED AND SPRAYING ATOMIZED ALCOHOL ONTO COMBUSITON HEATER ASSY. FAILURE RESULTING IN FIRE AND POSSIBLE EXPLOSION IN EVENT OF USING DE-ICE SYSTEM WHILE HEATER ON. FOUND LINE NOT SECURED FROM MFG IAW AC43.13-1B CH 8-31 REQUIRED CLAMP SPACING RESULTING IN VIBRATION AND WORK HARDENING OF THE ALCOHOL SUPPLY LINE. NO CLAMPS WERE INSTALLED ALONG APPROXIMATE 2.5 FEET STAINLESS STEEL LINE. FABRICATED STANDOFFS AND INSTALLED ADELL CLAMPS AS REQUIRED. ACFT RETURNED TO SERVICE. RECOMMEND CAREFUL INSP OF LINE IMMEDIATELY AND INSTALLATION OF CLAMPS.

AMCR201009	CESSNA	WILINT	TRUNNION	CORRODED
9/2/2010	525B	FJ443A	63413211	ZONE 700

CORROSION AT THE LT SIDE, AFT MLG TRUNNION PIN BORE AND FACE WAS FOUND WHILE PERFORMING 48 MONTH/ 2400 HR INSP. A MIXTURE OF FERROUS AND NON-FERROUS PARTS ARE USED IN THE AFFECTED AREAS. LUBRICATION OF THIS AREA IS PERFORMED AT 12 MONTH INTERVALS.

2010FA0000897	CESSNA	PWA	SEAT	BROKEN

8/16/2010	550	JT15D4	551900922	

UPPER SEAT BASE ASSY CRACKED AT CHAIR BACK ATTACH POINTS. STRESS ON CHAIR BACK AND METAL FATIGUE PROBABLE CAUSE. CHAIR WAS REPAIRED IAW REPAIR STA PROCEDURES STC STO1042WI.

2010FA0000926	CESSNA	PWA	GARLOCK SEAL	FAILED
8/16/2010	560XL	PW545A		ENGINE

OIL LOSS BOTH ENGINES: ACFT HAD BEEN IN AN "INACTIVE FLT STATUS" FOR APPROX 18 MONTHS. ACFT HAD BEEN FULLY MAINTAINED & ENGINE/ APU RUN UPS & ACFT TAXI CHECKS COMPLETED EVERY 30 DAYS. APPROVED OIL HAD BEEN USED SINCE DELIVERY. ACFT HAD BEEN PREPPED FOR A MX FLT CHECK PRIOR TO PUTTING BACK IN FLT STATUS. PRIOR TO TAXIING FOR DEPARTURE, A 30 MIN GROUND RUN COMPLETED & NO OIL LEAKAGE NOTED BY MX. ACFT DEPARTED FOR MAINT FLT. AT 4500FT ALT. OIL PRESSURE NOTED TO BE DROPPING ON NR 1 ENG. CREW SHUTDOWN NR 1 ENG FOR PRECAUTIONARY MEASURES & REQUESTED EMERGENCY RETURN. ACFT LANDED WITHOUT INCIDENT, WHILE TAXIING IN CREW NOTED NR 2 ENG OIL PRESS DROPPING. ELECTED TO SHUTDOWN NR 2 & TOW ACFT BACK TO HANGAR. MFG RAPID RESPONSE TEAM CONFIRMED 254 OIL IS APPROVED FOR ENGINE. BUT FROM THEIR EXPERIENCE THEY SAID 254 SOFTENS ACCY GEARBOX GARLOCK SEALS. WHERE OIL2380 ALSO APPROVED DOES NOT SOFTEN SEALS. FINDINGS WERE 3 GARLOCK SEALS ON EACH ENGINE HAD LEAKED (HYD PUMP, FCU & BREATHER) BREATHER BEING WORSE & IT IS DISCHARGED INTO ENGINE EXHAUST. MFG CREW STATED A SIMILAR OCCURRENCE HAD HAPPENED BUT MFG DID NOT PUT ANYTHING OUT TO ALERT OPERATORS. CREW MENTIONED IT MAY BE DUE TO INACTIVITY, ALTHOUGH ACFT HAD BEEN RUN UP EVERY 30 DAYS IT MAY NOT BE ENOUGH. MENTIONED SOME OPERATORS PROBABLY DO NOT FLY SOME ACFT FOR 30 OR MORE DAYS AT A TIME AND OPERATORS NEED TO KNOW THE POTENTIAL HAZARDS.

2010FA0000963	CESSNA	GARRTT	FUEL CONTROL	OUT OF ADJUST
9/5/2010	650	TFE7313C	307080022	LT ENGINE

LT ENGINE SHUTDOWN IN CRUISE AT 30,000 FT. FLIGHT CREW ABLE TO RESTART NO FURTHER DEFECTS NOTED. FUEL CONTROL REPLACED WITH O/H UNIT, OPS CHECKS PROVIDED SATISFACTORY RESULTS.

2010FA0001011	CESSNA		SPAR	CORRODED
9/6/2010	680CE			FUSELAGE

(CNQR) DURING MX VISIT WITH SERVICE CTR, CORROSION WAS FOUND ON BOTH RT AND LT WHEEL WELL AREAS INCLUDING THE AFT SPAR AND SPAR CAPS. ACFT WAS RELOCATED 8/30/10 FOR MFG ENGINEERING EVALUATION AND REPAIRS ON A SPECIAL FLIGHT PERMIT. MFG STRUCTURES ENGINEERING HAS INSTRUCTED MX TO REMOVE ALL CORROSION BY POLISHING AND THEN MEASURE MATERIAL THICKNESS FOR FURTHER EVALUATION AND DETERMINATION IF WITHIN TOLERANCE OR FURTHER REPAIR REQUIREMENTS. CURRENTLY WAITING ON ENGINEERING FINAL DISPOSITION AS OF 9/5/10. SERVICE ORDER 2-77269

2010FA0001005	CESSNA		FRAME	CRACKED
9/8/2010	750		67601415	WING CTR SECTION

THE PN 6760141-5 FRAME IS PART OF THE AILERON POWER CONTROL UNIT SUPPORT ASSY AND IS APPLICABLE TO ACFT 750-0001 TO 750-0149 THAT HAVE NOT BEEN MODIFIED BY SB750-27-44. DURING SCHEDULED INSP, THE FRAME WAS FOUND TO BE FATIGUE CRACKED. THE PART WAS REPLACED. MFG ENGINEERING IS INVOLVED WITH THE ISSUE AND THE INVESTIGATION AS TO CAUSE IS ON-GOING.

2010FA0000937	CESSNA	CONT	STOP PIN	MISSING
8/19/2010	T210N	IO550P	R6559211A3	MIXTURE CONTROL

PILOT REPORTED ENGINE WOULD NOT SHUTDOWN WITH MIXTURE LEAN, UPON INSP OF CAUSE, FOUND MIXTURE STOP PIN MISSING AND HAD FALLEN OUT DURING OPERATION.

2010FA0000842	CIRRUS	CONT	VALVE	STUCK
8/11/2010	SR20	IO360ES		NR 3 CYLINDER

DURING ROUTINE 100 HR INSP, FOUND NR 3 CYL EXHAUST VALVE STUCK. WHEREBY, PISTON WAS STRIKING VALVE TOO CLOSE. NR1 & NR 3 CYLINDERS AT SEPARATE TIME HAD ON FIRST START OF DRY (COLD) A ROUGH ENGINE AND A BLANK ON MFG EGT SCREEN. WHY CHANGING FUEL INJECTOR NOZZLES FIRST PROBLEM OF

ROUGHNESS, DON`T KNOW. USING FLEX BOROSCOPE OF REMAINING CYLINDERS SHOWED THE SAME VALVE MARKS ON NR1, 2 AND 6 PISTONS SHOWING THESE CYLINDER EXHAUST VALVES HAD STUCK PREVIOUSLY. MFGS NOTIFIED OF ISSUE.

WVBA OM1	CIRRUS	CONT	FUEL LINE	CHAFED
8/5/2010	SR22	IO550N	646421	ENGINE

ACFT OWNER REQUESTED CLEANING OF HIS FUEL INJECTORS, WHICH WE DID. ALMOST COMPLETED WITH THE TASK, TIGHTENING THE NUT FOR THE NR1 CYL FUEL INJECTION LINE, NOTICED THAT THE LINE WAS VERY LOOSE, AND UPON FURTHER INSP FOUND THAT THE RETAINING CLIP THAT WAS SUPPOSED TO SECURE THE LINE TO AN ENGINE BRACKET WAS FALLING OUT AND NOT DOING ITS JOB. ALSO, NOTICED SOME BLACK STAINING ON ADJACENT ENGINE STRUCTURE. WHEN LINE WAS REMOVED, FOUND THAT APPROX 1" OF THE TUBING HAD BEEN WORN AWAY TO ABOUT HALF THICKNESS, AND IT WAS LEAKING FUEL OVER THE TOP OF THE ENGINE. INSPECTED THE OTHER FUEL LINES, AND ALSO FOUND NR 2 CYL FUEL INJECTION LINE ON OPPOSITE SIDE OF ENG ALSO HAD DAMAGE, HOWEVER THIS WAS CAUSED BY IGNITION LEADS THAT WERE RUBBING AGAINST THE LINE. NR2 LINE DAMAGE WAS LESS SEVERE AND IT WAS NOT LEAKING, BUT IT WAS NOT SERVICABLE. ORDERED AND INSTALLED NEW LINES. SECURED NR1 LINE WITH HEAVIER DUTY TYPE ADEL CLAMP, AND SECURED ALL IGNITION LEADS TO PREVENT FURTHER CHAFFING.

2010FA0000900	CIRRUS	CONT	BRUSH BLOCK	DAMAGED
8/17/2010	SR22	IO550N	ALE3045BS	ALTERNATOR

PILOT REPORTED ALTERNATOR STOPPED CHARGING. UPON INSP OF ALTERNATOR, IT WAS NOTED THAT BOTH BRUSHES WERE RIPPED OUT OF THE BRUSH BLOCK AND WERE FOUND IN THE ALTERNATOR.

V0XR201008170005	DHAV		ANGLE	CRACKED
8/17/2010	DHC8102		85300016118SP	ZONE 100

RT AFT CLOSING ANGLE CRACKED BEYOND LIMITS. R & R RT AFT CLOSING ANGLE.

V0XR201008170004	DHAV		ANGLE	CRACKED
8/17/2010	DHC8102		85300016117SP	ZONE 100

LEFT AFT CLOSING ANGLE CRACKED BEYOND LIMITS. R & R LT AFT CLOSING ANGLE.

V0XR201008170003	DHAV		ANGLE	CRACKED
8/17/2010	DHC8102		85300016113SP	ZONE 100

LEFT FWD CLOSING ANGLE CRACKED BEYOND LIMITS. R & R LT FWD CLOSING ANGLE.

2010FA0000843	DIAMON	CONT	DRIVE GEAR	BROKEN
8/1/2010	DA20C1	IO240B	6567662	STARTER

DURING 50 HR INSP, A PIECE OF METAL WAS FUND ON THE CHIP PLUG. AFTER REMOVING THE STARTER, THE DRIVE GEAR WAS FOUND BROKEN. THIS IS THE SECOND TIME, ONCE AT A 100 HOURS AGO AND NOW AT 50 HOURS SINCE MAJOR O/H. THE PROBLEM SEEMS TO BE THE CUT OF THE GEARS. THERE IS NO CHAMFER ON THE CLUSTER GEAR FOR THE STARTER GEAR TO ENGAGE PROPERLY CAUSING THE GEARS TO GRIND BEFORE THEY MESH. SIL04-8 WAS C/W AT O/H.

2010FA0000956	DIAMON	LYC	WIRE	BROKEN
8/18/2010	DA40	IO360A1A		BRUSH BLOCK

ALTERNATOR FAILED IN FLIGHT. FOUND BRUSH BLOCK WIRE BROKEN.

U43R2010AF0000199	DIAMON	LYC	STARTER	FAILED
9/7/2010	DA40	IO360M1A	14924LS	ZONE 100

STARTER FAILED TO ENGAGE, TECH CHECKED ELECTIRCAL CIRCUITS, THEY HAD POWER. STEPPED THE CREW TO A SPARE ACFT.

U43R2010AF0000198	DIAMON	LYC	PUMP	FAILED
9/3/2010	DA40	IO360M1A	5100009	FUEL SYSTEM

WITH 24 VOLTS APPLIED, ELECTRIC FUEL PUMP SUPPLIED ONLY 8 PSI. THIS WAS THE 4TH FLIGHT OF THE DAY AND 157.9 HOURS SINCE NEW.

U43R2010AF0000197	DIAMON	LYC	PUMP	FAILED
8/18/2010	DA40	IO360M1A	5100009	FUEL SYS

DURING THE SECOND PRE-FLIGHT OF THE DAY. THE ELECTRIC FUEL PUMP FAILED. TOTAL LIFE TIME OF THIS "NEW" TYPE OF PUMP 158.3

2010FA0000887	DIAMON	THIELT	CONTROL VALVE	FAILED
7/26/2010	DA42	TAE12501	057212K021401	PROPELLER

LT ENGINE SHUTDOWN IN CRUISE FLIGHT. FOUND DEFECTIVE PROP CONTROL VALVE AFTER PERFORMIND MX DOWNLOAD. REPLACED VALVE AND OPS CHECKED NORMAL.

2010FA0000838	DIAMON	THIELT	CHAIN	BROKEN
8/19/2010	DA42	TAE1250299	057233K001901	ENGINE TIMING

LT ENGINE STOPPED ON TAXI, WOULD NOT RESTART. FOUND TIMING CHAIN BROKEN.

ABXR2010090700038	DOUG	PWA	CARGO TRACK	CORRODED
5/11/2010	MD88	JT8D*	100026B	BS 1117-1150

DURING A HEAVY MX VISIT, THE AFT LOWER CARGO SEAT TRACK (CARGO TRACK), UPPER OTBD EDGE ABOVE LONGERON 28 LT WAS FOUND CORRODED BEYOND LIMITS. FABRICATED REPAIR PARTS FROM 7075 T-6 0.050" AND HEAT TREATED REPAIR PIECED TO T-6 TEMPER. SPLICED IN NEW WECTION OF TRACK FROM STATIONS 1122 TO 1145. RETURNED TO SERVICE.

2010FA0001004	DOUG		ROTOR	FAILED
9/3/2010	MD9030			GENERATOR

SHAFT IS SHEARED, THE STATOR HSG HAS SEPARATED FROM THE END-BELL (ALL HELI-COILS ARE PULLED AND BOLTS BROKEN). NOTE: OIL PUMP IS STILL MOUNTED TO THE END-BELL, SUSPECT SEVERE INTERNAL DAMAGE. ROTOR FAILURE. OPEN

2010FA0000846	DOUG		GENERATOR	FAILED
8/9/2010	MD9030		28B5278	

(HZ3R) DISASSEMBLED UNIT AND FOUND THE INSIDE TO BE COMPLETELY VOID OF OIL. THERE WAS A LARGE AMOUNT OF ALUMINUM INSIDE OF THE FILTER HOUSING. THE PUMP WAS SEIZED AND THE PUMP BEARING CAGE WAS PROTRUDING FROM THE HOUSING. THE PUMP DRIVE SHAFT WAS ALSO BROKEN. THE INSIDE PORTION OF THE STATOR AND THE END BELL WERE INTACT, BUT THE STATOR HAD SEVERE RUB DAMAGE AND BOTH THE STATOR AND THE ENDBELL HAD EXTREME HEAT DAMAGE. THE ROTOR HAD EXTREME RUB DAMAGE. THE DRIVE END BEARING WAS IN VERY GOOD CONDITION BUT THE ADE BEARING HAD EXTREMELY BAD WEAR AND HEAT DAMAGE. THE EXCITER STATOR WAS IN GOOD CONDITION. BASED ON THE AMOUNT OF ALUMINUM FOUND IN THE FILTER AND THE CONDITION OF THE PUMP, IT IS LIKELY THAT THE PUMP WAS THE FIRST TO FAIL. PREVENTATIVE ACTION: PENDING COMPLETION OF ENGINEERING INVESTIGATION.

2010FA0000847	DOUG		PUMP	FAILED
8/9/2010	MD9030		64308463	

(HZ3R) PUMP ASSY HAD SEVERE DAMAGES, SUCH AS GEAR BUSHINGS BROKE AND GEAR SHAFT DISASSEMBLED FROM NORMAL POSITION (STILL MOUNTED IN THE ROTOR). STATOR ASSY - SEVERE DAMAGES FROM ROTOR ASSY. END BELL ASSY - LINER HAS BEEN DISINTEGRATED. LINER MOUNTING STRUCTURE ARE COMPLETELY DESTROYED. ROTOR ASSY - EXCITER AND MAIN STATOR SEVERE DAMAGES. SHAFT EXPERIENCED SEVERE HEATING DUE TO DISCOLORATION. CAUSE: BASED ON THE AMOUNT OF DAMAGE TO THE PUMP, IT IS LIKELY THAT THE PUMP WAS FIRST TO FAIL. PREVENTATIVE ACTION: PENDING COMPLETION OF ENGINEERING INVESTIAGTION.

V0XR201008230004	EMB		SEAT TRACK	CORRODED
8/23/2010	EMB145LR		14532606011	ZONE 100

SEAT TRACK A AT FR 18-24 IS CORRODED BEYOND LIMITS. R & R SEAT TRACK.

V0XR201008170002	EMB	SILL	CORRODED
8/17/2010	EMB145LR	14524131009	FUSELAGE

(V0XR) PAX SOOR SILL ANGLES ARE CORRODED BEYOND LIMITS. R & R PAX DOOR SILL ANGLES.

V0XR201008240001	EMB	SEAT TRACK	CORRODED
8/24/2010	EMB145LR	14532605001	ZONE 100

SEAT TRACK D AT FR 24-30 IS CORRODED BEYOND LIMITS. R & R CORRODED SEAT TRACK.

V0XR201008230007	EMB	SEAT TRACK	CORRODED
8/23/2010	EMB145LR	14530658003	ZONE 100

SEAT TRACK-C AT FR 30-36 IS CORRODED BEYOND LIMITS. R & R SEAT TRACK.

V0XR201008200008	EMB	ANGLE	CORRODED
8/20/2010	EMB145LR	14521715007	ZONE 100

SCALLOPED ANGLE AT LY 479.0 FR 19 IS CORRODED BEYOND LIMITS. R & R PROFILE.

V0XR201008200009	EMB	SEAT TRACK	CORRODED
8/20/2010	EMB145LR	14532605003	ZONE 100

SEAT TRACK FR 30-36 IS CORRODED BEYOND LIMITS. R & R SEAT TRACK.

V0XR201008230003	EMB	SEAT TRACK	CORRODED
8/23/2010	EMB145LR	14530659011	ZONE 100

SEAT TRACK B AT FR 18-24 IS CORRODED BEYOND LIMITS. R & R SEAT TRACK.

V0XR201008190013	EMB	SILL	CORRODED
8/19/2010	EMB145LR	14521725001	ZONE 100

LT FWD SILL IS CORRODED BEYOND LIMITS. R & R LT FWD SILL.

V0XR201008190014	EMB	SILL	CORRODED
8/19/2010	EMB145LR	14522460013	ZONE 100

CENTER BEAM GUSSET 0.0 AT FR 18-24 IS CORRODED BEYOND LIMITS. R & R CTR GUSSET.

V0XR201008190015	EMB	SILL	DAMAGED
8/19/2010	EMB145LR	14521725615	ZONE 100

(V0XR) AFT SERVICE DOOR SILL AT 780.0 FR 22-24 HAS 2 REPAIRS. R & R AFT SERVICE DOOR SILL.

V0XR201008230001	EMB	GUSSET	CORRODED
8/23/2010	EMB145LR	14522226003	ZONE 100

CENTER GUSSET FR 59-62 IS CORRODED BEYOND LIMITS. R & R CTR GUSSET.

V0XR201008230002	EMB	GUSSET	CORRODED
8/23/2010	EMB145LR	14522226003	ZONE 100

GUSSET LY 479.0 FR 59-62 IS CORRODED BEYOND LIMITS. R & R GUSSET.

V0XR201008200001	EMB	GUSSET	CORRODED
8/20/2010	EMB145LR	1452199003	ZONE 100

(V0XR) GUSSET ON BEAM LY 479.0 FR 19-23 IS CORRODED BEYOND LIMITS. REMOVED AND REPLACED GUSSET. W/C 1075

V0XR201008200002	EMB		GUSSET	CORRODED
8/20/2010	EMB145LR		14522460015	ZONE 100
DIGITAL AT FR 19-23 Y0.0 TO 479.0 IS CORRODED BEYOND LIMITS. R & R DIGITAL.				
V0XR201008200003	EMB		GUSSET	CORRODED
8/20/2010	EMB145LR		14526437001	ZONE 100
RT OMEGA BEAM GUSSET 479.0 AT FR 59-61 IS CORRODED BEYOND LIMITS. R & R GUSSET.				
V0XR201008200004	EMB		SILL	DAMAGED
8/20/2010	EMB145LR		14521725013	BS 780
LT SILL FWD OF SERVICE DOOR AT 780.0 FR 17-20 IS REPAIRED AND REQUIRES REPLACEMENT. LT SILL R & R.				
V0XR201008200005	EMB		BEAM	DAMAGED
8/20/2010	EMB145LR		14525522001	ZONE 100
BEAM LY 479.0 - Y0.0 FR 65 IS BENT AND DAMAGED. BEAM R & R.				
V0XR201008230008	EMB		SEAT TRACK	CORRODED
8/23/2010	EMB145LR		14532606015	ZONE 100
SEAT TRACK-A AT FR 36-46 IS CORRODED BEYOND LIMITS. R & R SEAT TRACK.				
V0XR201008190008	EMB		SUPPORT ANGLE	CORRODED
8/19/2010	EMB145LR		14522466005	BS 479-780
ANGLE 479.0 TO 780.0 AT FR 18 IS CORRODED BEYOND LIMITS. R & R SUPPORT ANGLE.				
V0XR201008190011	EMB		SILL	CORRODED
8/19/2010	EMB145LR		14524119007	ZONE 800
PAX DOOR SILL AT FR 20 - 22 IS CORRODED BEYOND LIMITS. R & R PAX DOOR SILL.				
V0XR201008190005	EMB		FLOOR SUPPORT	CORRODED
8/19/2010	EMB145LR		14522459003	ZONE 100
CTR OMEGA BEAM SCALLOPED ANGLE FROM FR 18 - 20 IS CORRODED BEYOND LIMITS. R & R CTR OMEGA BEAM.				
V0XR201008190006	EMB		GUSSET	CORRODED
8/19/2010	EMB145LR		14522461011	ZONE 100
RT FWD AND AFT GUSSETS 479.0 AT FR 20 - 22 ARE CORRODED BEYOND LIMITS. R & R RT FWD AND AFT GUSSETS.				
V0XR201008190016	EMB		SEAL	DETERIORATED
8/19/2010	EMB145LR		14573606905	LT WING
LT WING INBD FLAP BUTTE DOOR SEAL DETERIORATED. R & R LT WING INBD FLAP BUTTE DOOR SEAL.				
V0XR201008190009	EMB		GUSSET	BENT
8/19/2010	EMB145LR		14523570005	FLOOR SUPPORT
GUSSET ON RT OMEGA BEAM AT FR 57 IS BENT AND RIVETS PULLED OUT. R & R GUSSET.				
V0XR201008190007	EMB	ALLSN	FLOOR SUPPORT	CORRODED
8/19/2010	EMB145LR	AE3007A	14522466009	ZONE 100
BOTTOM SUPPORT ANGLE 780.0 TO 479.0 AT FR 18 IS CORRODED BEYOND LIMITS. R & R SUPPORT ANGLE.				
V0XR201008190010	EMB	ALLSN	SILL	CORRODED

8/19/2010	EMB145LR	AE3007A	14522178605	ZONE 100

(V0XR) SERVICE DOOR SILL AT FR 20 - 22 IS CORRODED BEYOND LIMITS. R & R SERVICE DOOR SILL.

V0XR201008230010	EMB	ALLSN	SEAT TRACK	CORRODED
8/23/2010	EMB145LR	AE3007A	14532605017	ZONE 100

SEAT TRACK-D AT FR 47-53 IS CORRODED BEYOND LIMITS. R & R SEAT TRACK.

V0XR201008200007	EMB	ALLSN	SEAT TRACK	CORRODED
8/20/2010	EMB145LR	AE3007A	14530637005	ZONE 100

LT UPPER SEAT TRACK SUPPORT FR 47.5 - 52.5 IS CORRODED BEYOND LIMITS. R & R LT UPPER SEAT TRACK SUPPORT.

V0XR201008240003	EMB	ALLSN	ATTACH ANGLE	CRACKED
8/24/2010	EMB145LR	AE3007A	14566044604	ZONE 100

RT NR 1 BOTTOM WING-BODY ATTACHMENT ANGLE IS CRACKED. R & R CRACKED RT WING-BODY ATTACHMENT ANGLE.

V0XR201008240002	EMB	ALLSN	ATTACH ANGLE	CRACKED
8/24/2010	EMB145LR	AE3007A	14566044603	WING TO BODY

LT NR1 BOTTOM WING-BODY ATTACHMENT ANGLE IS CRACKED. R & R CRACKED WING-BODY ATTACHMENT ANGLE.

V0XR201008230005	EMB	ALLSN	SEAT TRACK	CORRODED
8/23/2010	EMB145LR	AE3007A	14532606001	ZONE 100

SEAT TRACK AT FR 24-30 IS CORRODED BEYOND LIMITS. R & R SEAT TRACK. W/C 2093

V0XR201008230006	EMB	ALLSN	SEAT TRACK	CORRODED
8/23/2010	EMB145LR	AE3007A	14530659001	ZONE 100

SEAT TRACK B AT FR 24-30 IS CORRODED BEYOND LIMITS. R & R SEAT TRACK.

V0XR201008230009	EMB	PWA	SEAT TRACK	CORRODED
8/23/2010	EMB145LR	PW2037	14532606017	ZONE 100

SEAT TRACK A AT FR 47-53 IS CORRODED BEYOND LIMITS. R & R SEAT TRACK.

V0XR201008170001	EMB	RROYCE	SILL	CORRODED
8/17/2010	EMB145LR	AE3007A12	14524131011	FUSELAGE

PAX DOOR SILL ANGLES ARE CORRODED BEYOND LIMITS. R & R PAX DOOR SILL ANGLES.

V0XR201008250001	EMB	RROYCE	SEAT TRACK	CORRODED
8/25/2010	EMB145LR	AE3007A12	14530658601	ZONE 100

SEAT TRACK C BETWEEN FR 24-30 IS CORRODED BEYOND LIMITS. REMOVED AND REPLACED SEAT TRACK C. W/C 2096

2010FA0000851	GROB	LYC	CONTROL CABLE	BROKEN
8/20/2010	G120A	AEIO540D4D5	120A6122	MIXTURE CC

PILOT REPORTED DURING GROUND OPERATION HE EXPERIENCED A TOTAL LOSS OF MIXTURE CONTROL. INVESTIGATION MIXTURE CONTROL CABLE HAD BROKEN AT THE CONTROL IN THE CABIN. PROBABLE CAUSE UNKNOWN. RECOMMEND ENGINE CONTROL CABLES BE REPLACED AT ENGINE CHANGE (1800 HRS.)

2010FA0000834	GULSTM		DUCT	DAMAGED
8/9/2010	G1159A		1159AC2005563	APU BLEED AIR

DURING POST FLIGHT INSP WITH THE APU RUNNING AND BLEED AIR SELECTED ON, IT WAS NOTED THAT THERE WAS A HOLE IN THE INSULATION OF THE APU AND GROUND START DUCT, AND BLEED AIR FELT TO BE ESCAPING. FURTHER INVESTIGATION FOUND THAT A TWO (2) INCH CRACK HAD DEVELOPED IN THE WELDED SEAM AT THE "Y" SECTION OF THE APU AND GROUND START DUCT.

2010FA0000896	GULSTM	FITTING	FAILED
9/17/2009	G44	AN8234D	HYD SYSTEM

ON LANDING, THE RT BRAKE LINE 45 DEGREE HYD FITTING FAILED CAUSING A LOSS OF ACFT RT BRAKE AND A GROUND LOOP TO THE LT AND SUBSEQUENT ACFT WING DAMAGE. THIS ACFT ACCIDENT NTSB ID NUMBER IS ANC09LA100. THE ACFT WAS ON A TEST FLIGHT AFTER MX. THE RT BRAKE HAD UNDERGONE MX BUT THIS FITTING IN QUESTION WAS NOT DISTURBED BY THE MAINTENANCE. EARLIER MAINTENANCE GROUND TESTING DID NOT REVEAL A FAULT IN THE BRAKES. NTSB MATERIALS LABORATORY TESTING OF THE HYD BRAKE LINE FITTING INDICATED FATIGUE FAILURE, NOT OVERLOAD FAILURE OF THE FITTING. CLOSE ANALYSIS OF THE HYD. FITTING THREADS INDICATES THAT THIS "AN" STAMPED PART HAD THE REDUCED STRENGTH OF AN INDUSTRIAL JIC FITTING, (VISUALLY IDENTICAL EXCEPT FOR THE AN STAMP). THE NTSB PART ANALYSIS REPORT CAN BE FOUND WITH THE RELEASED FACTUAL REPORT FOR THE ACCIDENT ANC09LA100.

VU2R10112	GULSTM	DOWNLOCK SWITCH	FALSE INDICATION
8/27/2010	GIV	1159SCAV4571	NLG

ON APPROACH, PA SELECTED LANDING GEAR DOWN. NLG DOWN AND LOCKED INDICATOR DID NOT INDICATE DOWN AND LOCKED CONDITION. ACFT MADE SEVERAL PASSES OVER CONTROL TOWER AND TOWER CONFIRMED ALL 3 LANDING GEAR WERE EXTENDED. PERFORMED AN EMERGENCY EXTENSION OF LANDING GEAR AS A PRECAUTION AND MADE AN UNEVENTFUL LANDING. OBTAINED SPECIAL FLIGHT PERMIT, PINNED ALL THREE GEAR IN THE DOWN AND LOCKED POSITION AND FLEW ACFT BACK TO HOME BASE. DETERMINED NLG DOWNLOCK SWITCH TO BE FAULTY. REPLACED SWITCH AND RETURNED ACFT TO SERVICE.

2010FA0000837	GULSTM	PITOT HEAD	OBSTRUCTED
8/18/2010	GIV		

OPERATOR NOTIFIED THAT THE ABOVE ACFT HAD BEEN RECORDED 200' LOW ON A RVSM HEIGHT MONITORING STA. A COMPLETE 91.411 AND 91.413 CHECK WAS COMPLETED WITH NO FAULT FOUND. ALL SYS SHOWED NO SIGNIFICANT ERRORS OR LEAKAGE. IT WAS LATER DISCOVERED THAT DURING THE PITOT STATIC CHECKS THAT THE TECH ONLY PLUMBED THE TEST EQUIPMENT INTO THE LT SIDE STATIC PORTS. THIS ACFT HAS 2 STATIC PORTS FOR EACH AIR-DATA COMPUTER, PILOTS LT & RT AS WELL AS COPILOTS LT & RT. WHEN EACH PORT WAS CHECKED INDIVIDUALLY THE PILOT'S RT STATIC PORT WAS FOUND TO BE BLOCKED BY WHAT APPEARED TO BE MUD OR BUG DEBRIS. THIS CONDITION WOULD CAUSE A STATIC PRESSURE IMBALANCE CAUSING AN ALTITUDE ERROR. THE STATIC PORT WAS PURGED AND CLEARED AND THE ACFT RETURNED TO SERVICE. THIS IS THE SECOND TIME THE SUBMITTER HAS SEEN THIS CONDITION AND SUGGESTS THAT DURING THE 24 MONTH PITOT STATIC RECERTIFICATION THAT ALL PORTS AND PROBES BE CHECKED INDIVIDUALLY FOR OPERATION AND BLOCKAGES.

AMCR201008	GULSTM	RROYCE	MASK	WRONG PART
8/26/2010	GIVG400	TAY6118	289601205	COCKPIT

FOUND PORTABLE O2 MASK TO BE THE INCORRECT TYPE. EVEN THOUGH CUSTOMER BULLETIN 213 DID NOT LIST THIS ACFT IN THE EFFECTIVITY SECTION, AN INSP REVEALED THE WRONG MASK ANYWAY. ANOTHER BAD MASK WAS FOUND ON ANOTHER ACFT IN THE FLEET ALSO NOT LISTED IN THE BULLETIN. RECOMMEND ALL THESE OPERATORS CHECK THEIR PORTABLE O2 MASK FOR CORRECT PN IAW CB213.

2010FA0001010	HUGHES	ALLSN	SEAL	LEAKING
9/1/2010	369E	250C20B	23079054	M/R GEARBOX

FOUND SEAL LEAKING. THIS IS THE LATEST SEAL, HAVING PROBLEMS WITH. THESE SEALS ARE VERY DIFFICULT TO INSTALL DUE TO NEW MATERIALS AND NO CHANGES IN PROCEDURE OR TOOLING HAS COME FROM THE MFG. THE PROCESS OF INSTALLING THE SEAL USUALLY DESTROYS THE SEALING LIP.

2010FA0000952	HUGHES	ALLSN	ENGINE	MAKING METAL

9/5/2010	369E	250C20B		

ON APPROACH TO LANDING PILOT HAD AN ENGINE CHIP WARNING LIGHT. THE PILOT LANDED THE ACFT AND THE LIGHT REMANED ILLUMINATED. MX FOUND METAL PARTICLES AND PASTE ON THE LOWER AND UPPER ENGINE CHIP PLUGS. THE ENGINE WAS REMOVED FROM THE ACFT.

JGVR2010F00197	LEAR	PWA	CAM FOLLOWER	DAMAGED
8/23/2010	60LEAR	PW305A	23421063	NLG

NLG UPLOCK BRACKET CONTACTING SWITCH PLUG UPON RETRACTION INTO THE WHEEL WELL. NLG LOWER FORK NOTICED TO BE 5 DEGREES LT OF MECHANICAL CTR. SERVICED STRUT WITH NO CORRECTION TO 5 DEGREE DIFFERENCE. DISASSEMBLY OF STRUT REVEALED LOCK PIN GROOVE ON LOWER CAM TO BE ROTATED 5 DEGREES FROM POSITION NECESSARY TO NULL STRUT MECHANICALLY TO THE -0- DEGREE POSITION.

2010FA0000924	LET		RIB	CRACKED
8/31/2010	L23SUPERBLAN			ZONE 600

RT WING NR 3 RIB UPPER FLANGE FOUND CRACKED DURING INSPECTION.

2010FA0000836	LET		RIB	CRACKED
8/18/2010	L23SUPERBLAN			ZONE 500

DUURING 100 HOUR INSP UPPER NR3 RIB FLANGE FOUND CRACKED. CHRONIC PROBLEM.

2010FA0000891	LET		RIB	CRACKED
8/25/2010	L23SUPERBLAN			ZONE 500

NR3 RIB AT UPPER FLANGE, LT WING FOUND CRACKED.

2010FA0000923	LKHEED	LYC	WHEEL HALF	CRACKED
8/31/2010	P3A	O290	3003341	MLG

WHILE TOWING ACFT CREW NOTED EXCESSIVE NOISE FROM NR2 MAIN WHEEL ASSY. FURTHER INVESTIGATION REVEALED THE INBD HALF OF THE NR 2 WHEEL WAS FRACTURED, OUT FROM THE BRG CUP RACE SEAT OTBD TO ONE OF THE WHEEL HALF SPOKE HOLES.

2010FA0000955	MOONEY	CONT	TRUSS	FAILED
8/12/2010	M20K	TSIO360*	540016507	NOSE GEAR

PILOT STATES THAT HE HAD MADE SEVERAL LANDINGS DURNG THE DAY BUT ON THE FINAL ONE AS THE NOSE WHEEL TOUCHED DOWN IT STARTED TO "WOBBLE BRIEFLY" AND THEN COLLAPSED FOLLOWED BY THE MAIL LANDING GEAR. DURING THE INCIDENT INVESTIGATION IT WAS FOUND THAT THE NOSE GEAR TRUSS ASSY HAD FAILED AT THE WELD POINTS ON BOTH SIDES WHERE THE OVER CENTER (SPRING) ROD ENDS ATTACH.

2010FA0000892	PIAGIO		FIRE WARNING	FALSE ACTIVATION
8/25/2010	P180			LT NACELLE

LT ENGINE FIRE LIGHT AFTER TAKEOFF.

2010FA0000893	PIAGIO	PWA	AUTOFEATHER SYS	MALFUNCTIONED
8/25/2010	P180	PT6A66		

ACFT ATTEMPTED TO AUTOFEATHER ON APPROCH.

2010FA0000949	PIAGIO	PWA	ENGINE	SURGES
9/2/2010	P180	PT6A66		

ACFT ENGINES SURGED AND FELT LIKE THEY WERE AUTO FEATHERING ON APPROACH, AFX LIGHTS CYCLED ON

AND OFF.

2010FA0000895	PILATS	PWA	WINDSCREEN	CRACKED
8/24/2010	PC1245	PT6A67B	9598110109PILATU	COCKPIT

DURING A DECENT FROM 9K-8K FT THERE WAS HEARD A POP AND CRACKING SOUND. IT WAS FOUND THAT PILOT SIDE WINDSHIELD HAD CRACKED FROM OTBD TO INBD. AIRSPEED WAS SLOWED AND ACFT LEVELED AT ATC DIRECTION OF 8K FT. PILOTS TOOK SAFETY PRECAUTIONS AND CO-PILOT CONTINUED FLIGHT IN CASE OF FURTHER BREAKAGE ON PILOT SIDE. LANDING CHECKLIST WAS COMPLETED AND ALSO NOTED THAT PRESUURIZXATION WAS NOT AFFECTED AND REMAINED IN NORMAL SCHEDULING RATE, ALSO WINDSHILED HEAT WAS STILL FUNCTIONING. LANDING WAS WITHOUT INCIDENT. MX MET THE ACFT, PILOTS WROTE UP DISCREPANCY AND ACFT WAS GROUNDED TO REPLACE WINDSHIELD.

2010FA0000832	PILATS	PWA	BRAKE DISC	BROKEN
8/12/2010	PC1245	PT6A67B	15907400	MLG BRAKE

AFTER LANDING AND DURING TAXI PILOTS FELT VIBRATION WHILE TAXING. TAXIED OFF RUNWAY AND STOPPED. CREW FELT THEY MAY HAVE HAD FLAT TIRE. PASSENGERS WERE DEPLANED AND TAKEN TO TERMINAL OF COMPANY. ACFT WAS TOWED TO MX HANGAR. UPON FURTHER INVESTIGATION IT WAS FOUND THAT RT BRAKE ASSY HAD A BROKEN ROTOR DISK. BRAKE ASSY WAS CHANGED OUT IAW SRM AND ACFT RETURNED TO SERVICE.

2010FA0000853	PILATS	PWA	HEATER	SMOKE
8/15/2010	PC1247	PT6A67	E955AE1111	ZONE 100

IN CRUISE FLIGHT FL250, SMOKE WAS NOTED IN THE CABIN AREA. THE PILOT DIVERTED FROM THE INTENDED ROUTE AND LANDED. ON EXAMINATION IT WAS DETERMINED THAT THE AUX CABIN HEATER WIRING FOR THE HEATING ELEMENT (INTERNAL TO THE UNIT) INSULATION WAS SMOKING. THE HEATER UNIT WAS R & R. THE ORIGINAL HEATER UNIT WAS RETURNED TO THE MFG FOR EVALUATION. THE AUX CABIN HEATER RELAY WAS REPLACED AS A PRECAUTION AND WAS ALSO RETURNED TO THE MFG FOR EVALUATION. A FUNCTIONAL TEST OF THE SYS WAS PERFORMED FOLLOWING REPLACEMENT OF HEATER AND RELAY. NO DISCREPANCIES NOTED.

2010FA0000849	PILATS	PWA	BRAKE DISC	CRACKED
8/16/2010	PC1247	PT6A67B	244759C	LT MLG

LEFT BRAKE GRABS. DURING VISUAL INSP OF THE LT MLG BRAKE ASSY, THE OUTER BRAKE DISC WAS FOUND CRACKED. REMOVED BOTH BRAKE AND WHEEL ASSEMBLIES AND INSTALLED BRAKE AND WHEEL CONVERSION STC SA01376CH IAW STC INSTRUCTIONS.

2010FA0000901	PIPER		STRUT	CORRODED
7/2/2010	PA17		1180400	LANDING GEAR

LANDING GEAR STRUT ASSY FAILED DUE TO INTERNAL CORROSION RESULTING IN COLLAPSE OF RT GEAR DURING LANDING. MINOR DAMAGE TO WING, COWLING AND GEAR. PROP STRIKE. AGING ACFT ISSUE.

2010FA0000933	PIPER	LYC	SPAR	CRACKED
9/1/2010	PA24260	TIO540*	2344702	RUDDER

RUDDER SPAR CRACKED AT UPPER HINGE FITTING.

2010FA0000934	PIPER	LYC	SPAR	CRACKED
9/1/2010	PA24260	TIO540*	2344702	RUDDER

RUDDER SPAR CRACKED AT UPPER HINGE FITTING.

2010FA0001003	PIPER	LYC	CONTROL CABLE	BROKEN
9/2/2010	PA28161	O320*	MC62701047	STAB TRIM

CABLE DIAMETER 0.0700, OEM CABLE DIAMETER: 0.0665. LARGER DIAMETER CABLE CAUSES IMPROPER RESTING OF CABLE INTO TRIM BARREL GROOVE, CAUSING OVER EXTENDING OF OVERALL DIAMETER AS WELL AS "WOBBLE" ON THE RAISED SECTION. ONCE INSTALLED, AND DUE TO CLOSE CLEARANCES BETWEEN TRIM BARREL AND SUPPORTING BRACKET, THE "RAISED" PORTION OF CABLE CAUSES BARREL TO "JAM" INTO

POSITION ELIMINATING PROPER SMOOTH OPERATION OF THE STABILATOR TRIM CONTROL, WHICH WILL REQUIRE FROM OPERATOR OF ACFT EXCESSIVE FORCE TO TURN THE TRIM WHEEL, CAUSING IT TO EITHER BREAK THE CABLE (OR CABLES) OR INDUCE FLYING THE ACFT WITHOUT ANY BENEFITS OF THE TRIM TO COMPENSATE THE AERODYNAMIC FORCES APPLIED ON THE STABILATOR SURFACES.

2010FA0000950	PIPER	LYC	AIR FILTER	DEBONDED
9/7/2010	PA28R200	IO360C1C	BA10	ENGINE

FOUND AIRFILTER ELEMENT TO HAVE SEPARATED AT GLUED SEAM, LEADING TO INJESTION OF UNFILTERED AIR FOR AN UNKNOWN LENGTH OF TIME.

2010FA0001015	PIPER		COVER	BENT
6/14/2010	PA28R201T		8747702	FUEL STRAINER

DURING THE CLIMB OUT PHASE OF THE FLIGHT, AT APPROX 4200 AGL, 1 SIDE OF THE WIRE BAIL ON THE FIREWALL MOUNTED GASCOLATOR CAME OUT OF THE FUEL STRAINER COVER. THIS ALLOWED THE ENGINE DRIVE PUMP TO SUCK AIR INTO THE SYS THROUGH THE UNSEATED STRAINER BOLW WHICH RESULTED IN A LOSS OF FUEL PRESSURE TO THE POINT THAT THE ENGINE FLOW DIVIDER SHUTDOWN THE FUEL FLOW TO THE INJECTORS AND THE ENGINE QUIT RUNNING. THE ACFT WAS A TOTAL LOSS DUE TO DAMAGES SUSTAINED IN THE OFF AIRPORT LANDING IN A CORN FIELD. POST ACCIDENT INSPECTION REVEALED THE FUEL STRAINER COVER WAS DISTORTED FORM OVER TORQUEING OF THE RETAINER BAIL NUT. WHEN THE COVER IS BENT, THE RECEPTACALES FOR THE WIRE BAIL ARE POINTING DOWN INSTEAD OF PARALLEL, WHICH TENDS TO ENCOURAGE THE WIRE BAIL TO SLIP OUT OF THE RECEPTACAL. THE MM DOES NOT CONTAIN ANY PROCEDURE TO TIGHTEN THE WIRE BAIL AFTER INSPECTING THE FILTER IN THE BOWL DURING REQUIRED MX. THIS PROBLEM HAS BEEN FOUND ON MANY ACFT WITH SIMILAR GASCOLATORS INSTALLED. ESTIMATED 20,000 ACFT ON REGISTRY. MANY MECHANICS IN THE FIELD HAVE RECOGNIZED THIS PROBLEM AND THOUGH NOT APPROVED, IN THE INTEREST OF SAFETY, HAVE SAFETY WIRED BOTH SIDES OF THE BAIL TOGETHER TO PREVENT IT FORM COMING OUT OF THE FILTER COVER.

2010FA0000852	PIPER	LYC	CAMSHAFT	CORRODED
8/20/2010	PA31350	LTIO540J2BD		ENGINE

EXCESSIVE CAM LOBE WEAR IS CAUSING POWER LOSS AND EARLY REMOVAL OF SEVERAL OF OUR ENGINES. THIS ENGINE WAS THE EARLIEST REMOVAL SO FAR, WITH 744 HOURS REMAINING UNTIL O/H. HAVE BEEN IN CONTACT WITH MFG TECH SUPPORT FOR AN EXTENDED PERIOD OF TIME NOW AND HAVE YET TO FIND A SOLUTION. IT SEEMS THAT FOR SOME REASON USUALLY ONE CAM FOLLOWER WILL BECOME "PITTED" AND BEGIN TO ACCELERATE WEAR ON THE LOBE IT RIDES ON. NO IDEA WHAT IS CAUSING THE PITTING, OR HOW TO PREVENT IT.

2010FA0000839	PIPER	LYC	O-RING	BROKEN
8/11/2010	PA32R300	TIO540*	C33171151	PROP HUB

PILOT REPORTED LOSS OF CONTROL OF PROPELLER CAUSING MOMENTARY OVERSPEED WHICH FORCED THE PILOT TO USE THE THROTTLE TO GAIN CONTROL. DISASSEMBLY OF PROPELLER REVEALED INTERNAL OIL LEAK CAUSING A HYD LOCK WITH THE BLADES AT FINE PITCH. FURTHER INVESTIGATION OF THE SEALS REVEALED FAULTY O-RING IN THE REAR OF THE HUB OF THE PROPELLER. O-RING WAS RETURNED TO THE MFG FOR THEIR ANALYSIS.

2010FA0000835	PIPER		LINK ASSY	CRACKED
8/18/2010	PA421000		75178002	NLG

DURING ROUTINE INSP, MX OF THE NLG THE LINK ASSY, NLG IDLER WAS FOUND CRACKED IN THREE (3) AREAS. THERE IS NO LIFE LIMIT ON THIS PART AND NO SPECIAL INSP REQUIREMENTS. SUGGEST 500 HR REPETIVE IN CONJUNCTION WITH SL1088 NLG SIDE BRACE INSP.

2010FA0000848	PIPER	LYC	STRIP	MIGRATED
8/4/2010	PA44180	O360A1H6		AIR BOX

ACFT REPORTED AS LT ENGINE WOULDN’T SLOW TO IDLE. DISCONNECTED THROTTLE CONTROL AND DETERMINED PROBLEM WITHIN THE CARB. THE CARB WAS REMOVED AND A VISUAL INSPECTED NOTED A FELT STRIP WEDGED IN BETWEEN THROTTLE PLATE AND CARB HSG. THE STRIP WAS REMOVED AND THE THROTTLE

VALVE WORKED NORMAL. IT WAS DETERMINED THE FELT STRIP MIGRATED FROM THE CARB AIR BOX. THE FELT IS USED AS A SEAL WITHIN THE AIRBOX ALLOWING THE VALVE TO MOVE WITHIN THE BOX AND SEAL WITHOUT WEARING THE COMPONENTS. THE FELT EVENTUALLY WORE TO A POINT OF RELEASING. THIS IS A COMMON DESIGN FOR A GOOD NR OF ACFT. THIS PARTICULAR INSTALLATION USES A SIDE DRAFT CARB RATHER THAN THE MORE COMMON UPDRAFT. SUSPECT THIS MAKES THIS PARTICULAR MODEL MORE SUSCEPTIBLE TO THIS TYPE OF FOD ISSUE.

E81RJT22870	RAYTHN	ACTUATOR	FAILED
9/3/2010	390	3903814020018	TE FLAPS

FLIGHT CREW REPORTED FLAP SYS FAIL INDICATION ON APPROACH. FOUND RT WING NR 3 FLAP ACTUATOR TO BE EXTENDED IN EXCESS OF 0.5 INCHES TOO FAR IN ALL FLAP POSITIONS. REPLACED THE NR 3 RT FLAP ACTUATOR WITH A REPAIRED ACTUATOR AND RIGGED THE FLAP SYS AS REQUIRED, OPERATIONAL TESTS NORMAL. FAILED ACTUATOR REPAIRED BY MFG FACILITY 4/10/2008. RECOMMEND AIRFRAME AND ACTUATOR MFG INVESTIGATE COMPONENT CLOSELY AT TEAR-DOWN TO SEE IF CAUSED BY A REPAIR FACILITY Q/C ISSUE (REF SB 27-3647) OR IF A REOCCURING DESIGN PROBLEM.

2010FA0000962	RAYTHN	FAIRING	CRACKED
8/30/2010	HAWKER800XP	258UD5071A	LT MLG

ON PREFLIGHT INSP, TECH NOTICED THE LT OTBD GEAR "FAIRING" DEFORMED & CRACKED ON INBD SIDE. IT APPEARS AS THOUGH SOMETHING STRUCK OR PUSHED FAIRING INBD MOST PROBABLY FROM THE LOWER OTBD SECTION, NO ABRASION, SCRATCH MARKS, DENTS WERE OBSERVED ON EITHER FAIRING OR OTHER PARTS OF THE LT GEAR SYS. INSPECTION THOUGH ACCESS HOLE TO THE ACTUATING ROD ARM BOLT REVEALED THAT THE INTERNAL BULKHEAD IS RIPPED, MAY HAVE HAD A PERVIOUS STRESS CRACK THAT COULD LEAD TO THIS TYPE OF FAILURE. REMOVE ACCESS PANEL FROM UPPER FWD CORNER OF FAIRING AND INSPECT BULKHEAD FOR CRACKING IN THE AREA SURROUNDING THE UPPER END OF THE RELIEF CUTOUT.

2010FA0000932	SNIAS	TMECA	BRACKET	CRACKED
8/20/2010	AS350B3	ARRIUS2B1	350A31202304	MAIN ROTOR HEAD

DURING ALF INSP, MECHANIC DISCOVERED .7500" CRACK IN MRH VIBRATION DAMPENER LOWER FLANGE ASSY SIDE MOUNTING BRACKET.

2010FA0000931	SOCATA	PWA	CONTROL CABLE	BROKEN
9/1/2010	TBM700	PT6A64		CONDITION LEVER

PERFORMED NORMAL START, NOTED LOW IDLE LOW, MOVED CONDITION LEVER TO HIGH IDLE WITH NO RESPONSE FROM ENGINE, TRIED SEVERAL TIMES & HAD NO RESPONSE. PERFORMED ENGINE SHUTDOWN. MOVED CONDITION LEVER IN COCKPIT WHILE 2ND PERSON WATCHED MOVEMENT ON FCU. MOVEMENT NOTED COUPLE TIMES THEN NOTED THAT LEVER MOVEMENT FELT DIFFERENT. IT WAS ALSO NOTED THAT MOVEMENT AT FCU STOPPED ALSO. INSP FOUND CONDITION LEVER CABLE IN PEDESTAL AT LEVER ATTACHMENT BROKEN IN THREADED AREA. THREADED AREA APPEARED TO HAVE CRACKED AREA ON OUTSIDE OF THREADED AREA WITH ONLY .2500 ENGAGEMENT OF TOTAL ROD NOT BEING CRACKED. CONTROLS NEVER SHOWED ANY SIGN OF BINDING. ANGLE ROD FLEXING AROUND CRACKED AREA OF THREADS. DAMAGED AREA OF CABLE THREADED PORTION THOUGHT TO BE FROM THREADING PROCESS AND POSSIBLE TOO SOFT MATERIAL AT MFG. FLEXING CAUSED BY WEAK AREA IN THREADED AREA TILL BENDING WENT TO BREAKING.