U.S. Department
of Transportation

Federal Aviation Administration

Advisory Circular

Subject: Change 10 to AIRPORT DESIGN

Date: 9/29/2006
Initiated by: AAS-100

AC No: 150/5300-13
Change: 10

1. PURPOSE. This Change includes revisions to Chapter 1, Tables 2-1 and 2-2, Appendix 2, and Appendix 16. It also adds a new Appendix 17. Major changes include the following:

a. Added information about tail heights and a table specifying wingspan and tail heights for each Airplane Design Group to Chapter 1, paragraph 2.

b. Identified cancelled references in Chapter 1, paragraph 3.

c. Added notes to Tables 2-1 and 2-2 and changed taxiway to taxilane centerline separation for Airplane Design Group VI in Table 2-2.

d. Clarified paragraph 4a(2), "Departure Surface for Designated Runways"; moved paragraph 2e, "Glidepath Qualification Surface", to paragraph 5a; and added Glidepath Qualification Surface dimensional criteria and clarifying notes to Table A2-1 in Appendix 2. Corrected dimensions for Row 9, Columns B and C, in Table A2-1 that were erroneously changed to 700 and 1776 feet in some copies of Change 9.

e. Updated Tables 3-1, 3-2, and 3-3.

f. Added paragraph 415, "End-Around Taxiways," and associated figures and tables to Chapter 4.

g. Updated references to Appendix 2 that appear in Tables A16-1A through A16-1C in Appendix 16.

h. Cancelled Appendices 6 and 7.

i. Added new Appendix 17, Minimum Distances Between Certain Airport Features and Any On-Airport Agriculture Crops.

j. Renumbered existing Appendices 17 and 18.

2. CHANGED TEXT. Changed text is indicated by vertical bars in the margins.

PAGE CONTROL CHART

Remove Pages	Dated	Insert Pages	Dated
1 – 2	10/1/02	1 – 2	9/29/06
3 – 4	2/14/97	3 – 6	9/29/06
5 – 6	10/1/02		
13	9/30/00	13 – 15	9/29/06
14 – 15	9/30/00		
16	11/10/94	16	11/10/94
23 – 26	11/10/94	23	11/10/94
		24 – 26	9/29/06
33 – 38	11/10/94	33 – 34*	11/10/94
		35 – 38	9/29/06
		39 – 40*	11/10/94
39 – 41	2/24/92	41 – 43*	2/24/92
42 – 46	9/29/89	44 – 48*	9/29/89
47 – 48	2/24/92	48-1 – 48-2*	2/24/92
		48-3 – 48-14	9/29/06

* Pages renumbered.

PAGE CONTROL CHART (Cont.)

Remove Pages	Dated	Insert Pages	Dated
99 – 100	9/29/89	99	9/29/89
101 – 107	9/26/05	100 – 104	9/29/06
		105 – 106*	9/26/05
		107	9/29/06
107 – 110	9/29/89	108*	9/26/05
		109	9/29/06
		110	9/29/89
125 – 128	9/29/89	125 – 130	9/29/06
129 – 130	2/14/97	131 – 138	9/29/06
131	2/14/97	291 – 301	9/29/06
132	10/1/03		
133 – 138	2/14/97		
291	9/30/00		
292 – 294	10/01/02		
295 – 301	9/30/00		

* Pages renumbered.

for

David L. Bennett
Director, Airport Safety and Standards

Chapter 1. REGULATORY REQUIREMENTS AND DEFINITION OF TERMS

1. GENERAL. Section 103 of the Federal Aviation Act of 1958 states in part, "In the exercise and performance of his power and duties under this Act, the Secretary of Transportation shall consider the following, among other things, as being in the public interest: (a) The regulation of air commerce in such manner as to best promote its development and safety and fulfill the requirements of defense; (b) The promotion, encouragement, and development of civil aeronautics . . . ."

This public charge, in effect, requires the development and maintenance of a national system of safe, delay-free, and cost-effective airports. The use of the standards and recommendations contained in this publication in the design of airports supports this public charge. These standards and recommendations, however, do not limit or regulate the operations of aircraft.

2. DEFINITIONS. As used in this publication, the following terms mean:

Aircraft Approach Category. A grouping of aircraft based on 1.3 times their stall speed in their landing configuration at their maximum certificated landing weight. The categories are as follows:

Category A: Speed less than 91 knots.

Category B: Speed 91 knots or more but less than 121 knots.

Category C: Speed 121 knots or more but less than 141 knots.

Category D: Speed 141 knots or more but less than 166 knots.

Category E: Speed 166 knots or more.

Airplane Design Group (ADG). A grouping of airplanes based on wingspan or tail height. Where an airplane is in two categories, the most demanding category should be used. The groups are as follows:

Group I: Up to but not including 49 feet (15 m) wingspan or tail height up to but not including 20 feet.

Group II: 49 feet (15 m) up to but not including 79 feet (24 m) wingspan or tail height from 20 up to but not including 30 feet.

Group III: 79 feet (24 m) up to but not including 118 feet (36 m) wingspan or tail height from 30 up to but not including 45 feet.

Group IV: 118 feet (36 m) up to but not including 171 feet (52 m) wingspan or tail height from 45 up to but not including 60 feet.

Group V: 171 feet (52 m) up to but not including 214 feet (65 m) wingspan or tail height from 60 up to but not including 66 feet.

Group VI: 214 feet (65 m) up to but not including 262 feet (80 m) wingspan or tail height from 66 up to but not including 80 feet.

Table 1-1. Airplane Design Groups (ADG)

Group #	Tail Height (ft)	Wingspan (ft)
I	<20	<49
II	20 - <30	49 - <79
III	30 - <45	79 - <118
IV	45 - <60	118 - <171
V	60 - <66	171 - <214
VI	66 - <80	214 - <262

Airport Elevation. The highest point on an airport's usable runway expressed in feet above mean sea level (MSL).

Airport Layout Plan (ALP). The plan of an airport showing the layout of existing and proposed airport facilities.

Airport Reference Point (ARP). The latitude and longitude of the approximate center of the airport.

Blast Fence. A barrier used to divert or dissipate jet blast or propeller wash.

Building Restriction Line (BRL). A line which identifies suitable building area locations on airports.

Clear Zone. See Runway Protection Zone.

Clearway (CWY). A defined rectangular area beyond the end of a runway cleared or suitable for use in lieu of runway to satisfy takeoff distance requirements.

Compass Calibration Pad. An airport facility used for calibrating an aircraft compass.

Declared Distances. The distances the airport owner declares available for the airplane's takeoff run, takeoff distance, accelerate-stop distance, and landing distance requirements. The distances are:

Takeoff run available (TORA). The runway length declared available and suitable for the ground run of an airplane taking off;

Takeoff distance available (TODA). The TORA plus the length of any remaining runway or clearway (CWY) beyond the far end of the TORA;

NOTE: The full length of TODA may not be usable for all takeoffs because of obstacles in the departure area. The usable TODA length is aircraft performance dependent and, as such, must be determined by the aircraft operator before each takeoff and requires knowledge of the location of each controlling obstacle in the departure area.

Accelerate-stop distance available (ASDA). The runway plus stopway (SWY) length declared available and suitable for the acceleration and deceleration of an airplane aborting a takeoff; and

Landing distance available (LDA). The runway length declared available and suitable for a landing airplane.

Fixed By Function NAVAID. An air navigation aid (NAVAID) that must be positioned in a particular location in order to provide an essential benefit for civil aviation is fixed by function. Exceptions are:

a. Equipment shelters, junction boxes, transformers, and other appurtenances that support a fixed by function NAVAID *are not* fixed by function unless operational requirements require them to be located in close proximity to the NAVAID.

b. Some NAVAIDs, such as localizers, can provide beneficial performance even when they are not located at their optimal location. These NAVAIDS are not fixed by function.

Frangible NAVAID. A navigational aid (NAVAID) which retains its structural integrity and stiffness up to a designated maximum load, but on impact from a greater load, breaks, distorts, or yields in such a manner as to present the minimum hazard to aircraft. The term NAVAID includes electrical and visual air navigational aids, lights, signs, and associated supporting equipment.

Hazard to Air Navigation. An object which, as a result of an aeronautical study, the FAA determines will have a substantial adverse effect upon the safe and efficient use of navigable airspace by aircraft, operation of air navigation facilities, or existing or potential airport capacity.

Large Airplane. An airplane of more than 12,500 pounds (5 700 kg) maximum certificated takeoff weight.

Low Impact Resistant Supports (LIRS). Supports designed to resist operational and environmental static loads and fail when subjected to a shock load such as that from a colliding aircraft.

Object. Includes, but is not limited to above ground structures, NAVAIDs, people, equipment, vehicles, natural growth, terrain, and parked aircraft.

Object Free Area (OFA). An area on the ground centered on a runway, taxiway, or taxilane centerline provided to enhance the safety of aircraft operations by having the area free of objects, except for objects that need to be located in the OFA for air navigation or aircraft ground maneuvering purposes.

Obstacle Clearance Surface (OCS). An inclined obstacle evaluation surface associated with a glidepath. The separation between this surface and the glidepath angle at any given distance from GPI defines the MINIMUM required obstruction clearance at that point.

Obstacle Free Zone (OFZ). The OFZ is the airspace below 150 feet (45 m) above the established airport elevation and along the runway and extended runway centerline that is required to be clear of all objects, except for frangible visual NAVAIDs that need to be located in the OFZ because of their function, in order to provide clearance protection for aircraft landing or taking off from the runway, and for missed approaches. The OFZ is sub-divided as follows:

Runway OFZ. The airspace above a surface centered on the runway centerline.

Inner-approach OFZ. The airspace above a surface centered on the extended runway centerline. It applies to runways with an approach lighting system.

Inner-transitional OFZ. The airspace above the surfaces located on the outer edges of the runway OFZ and the inner-approach OFZ. It applies to runways with approach visibility minimums lower than 3/4-statute mile (1 200 m).

Obstruction to Air Navigation. An object of greater height than any of the heights or surfaces presented in Subpart C of Code of Federal Regulation (14 CFR), Part 77. (Obstructions to air navigation are presumed to be hazards to air navigation until an FAA study has determined otherwise.)

Precision Approach Category I (CAT I) Runway. A runway with an instrument approach procedure which provides for approaches to a decision height (DH) of not less than 200 feet (60 m) and visibility of not less than 1/2 mile (800 m) or Runway Visual Range (RVR) 2400 (RVR 1800 with operative touchdown zone and runway centerline lights).

Precision Approach Category II (CAT II) Runway. A runway with an instrument approach procedure which provides for approaches to a minima less than CAT I to as low as a decision height (DH) of not less than 100 feet (30 m) and RVR of not less than RVR 1200.

Precision Approach Category III (CAT III) Runway. A runway with an instrument approach procedure which provides for approaches to minima less than CAT II.

Runway (RW). A defined rectangular surface on an airport prepared or suitable for the landing or takeoff of airplanes.

Runway Blast Pad. A surface adjacent to the ends of runways provided to reduce the erosive effect of jet blast and propeller wash.

Runway Protection Zone (RPZ). An area off the runway end to enhance the protection of people and property on the ground.

Runway Safety Area (RSA). A defined surface surrounding the runway prepared or suitable for reducing the risk of damage to airplanes in the event of an undershoot, overshoot, or excursion from the runway.

Shoulder. An area adjacent to the edge of paved runways, taxiways, or aprons providing a transition between the pavement and the adjacent surface; support for aircraft running off the pavement; enhanced drainage; and blast protection.

Small Airplane. An airplane of 12,500 pounds (5 700 kg) or less maximum certificated takeoff weight.

Stopway (SWY). A defined rectangular surface beyond the end of a runway prepared or suitable for use in lieu of runway to support an airplane, without causing structural damage to the airplane, during an aborted takeoff.

Taxilane (TL). The portion of the aircraft parking area used for access between taxiways and aircraft parking positions.

Taxiway (TW). A defined path established for the taxiing of aircraft from one part of an airport to another.

Taxiway Safety Area (TSA). A defined surface alongside the taxiway prepared or suitable for reducing the risk of damage to an airplane unintentionally departing the taxiway.

Threshold (TH). The beginning of that portion of the runway available for landing. In some instances, the landing threshold may be displaced.

Displaced Threshold. The portion of pavement behind a displaced threshold may be available for takeoffs in either direction and landings from the opposite direction.

Relocated Threshold. The portion of pavement behind a relocated threshold is not available for takeoff or landing. It may be available for taxiing of aircraft.

Visual Runway. A runway without an existing or planned straight-in instrument approach procedure.

3. <u>RELATED/REFERENCED READING MATERIAL</u>. The following is a listing of documents referenced in other parts of this advisory circular. Advisory Circulars 00-2 and 00-44 may be obtained by writing to: The U.S. Department of Transportation; Utilization and Storage Section, M-443.2; Washington, D.C. 20590. Instructions for obtaining these publications are found in AC 00-2 and AC 00-44.

NOTE: Some of the ACs in this paragraph have been cancelled but are still referenced in the main document. They will continue to be listed here and shown as cancelled until the next complete revision of the document.

a. AC 00-2, Advisory Circular Checklist.

b. AC 00-44, Status of Federal Aviation Regulations.

c. AC 20-35, Tiedown Sense.

d. AC 70/7460-1, Obstruction Marking and Lighting.

e. AC 70/7460-2, Proposed Construction or Alteration of Objects that May Affect the Navigable Airspace.

f. AC 107-1, Aviation Security-Airports.

g. AC 120-29, Criteria for Approving Category I and Category II Landing Minima for FAR Part 121 Operators.

h. AC 150/5000-3, Address List for Regional Airports Divisions and Airports District/Field Offices. (Cancelled)

i. AC 150/5060-5, Airport Capacity and Delay.

j. AC 150/5070-3, Planning the Airport Industrial Park.

k. AC 150/5070-6, Airport Master Plans.

l. AC 150/5190-1, Minimum Standards for Commercial Aeronautical Activities on Public Airports. (Cancelled by AC 150/5190-5)

m. AC 150/5190-4, A Model Zoning Ordinance to Limit Height of Objects Around Airports.

n. AC 150/5190-5, Exclusive Rights and Minimum Standards for Commercial Aeronautical Activities.

o. AC 150/5200-33, Hazardous Wildlife Attractants On or Near Airports.

p. AC 150/5220-16, Automated Weather Observing Systems (AWOS) for Non-Federal Applications.

q. AC 150/5320-4, Aircraft Fuel Storage, Handling, and Dispensing on Airports.

r. AC 150/5320-5, Airport Drainage.

s. AC 150/5320-6, Airport Pavement Design and Evaluation.

t. AC 150/5320-14, Airport Landscaping for Noise Control Purposes.

u. AC 150/5325-4, Runway Length Requirements for Airport Design.

v. AC 150/5340-1, Standards for Airport Marking.

w. AC 150/5340-5, Segmented Circle Marker Systems.

x. AC 150/5340-14, Economy Approach Lighting Aids. (Cancelled by AC 150/5340-30)

y. AC 150/5340-18, Standards for Airport Sign Systems.

z. AC 150/5340-21, Airport Miscellaneous Lighting Visual Aids. (Cancelled by AC 150/5340-30)

aa. AC 150/5340-24, Runway and Taxiway Edge Lighting System. (Cancelled by AC 150/5340-30)

bb. AC 150/5340-28, Precision Approach Path Indicator (PAPI) Systems. (Cancelled by AC 150/5340-30)

cc. AC 150/5340-30, Design and Installation Details for Airport Visual Aids

dd. AC 150/5345-52, Generic Visual Slope Indicators (GVGI).

ee. AC 150/5360-13, Planning and Design Guidelines for Airport Terminal Facilities.

ff. AC 150/5370-10, Standards for Specifying Construction of Airports.

gg. AC 150/5390-2, Heliport Design.

hh. 14 CFR Part 23, Airworthiness Standards: Normal, Utility, Acrobatic, and Commuter Category Airplanes.

ii. 14 CFR Part 25, Airworthiness Standards: Transport Category Airplanes.

jj. 14 CFR Part 77, Objects Affecting Navigable Airspace.

kk. 14 CFR Part 97, Standard Instrument Approach Procedures.

ll. 14 CFR Part 135, Operating Requirements: Commuter and On Demand Operations and Rules Governing Persons On Board Such Aircraft.

mm. 14 CFR Part 139, Certification of Airports.

nn. 14 CFR Part 151, Federal Aid to Airports.

oo. 14 CFR Part 152, Airport Aid Program.

pp. 14 CFR Part 153, Acquisition of U.S. Land for Public Airports. (Removed from Title 14)

qq. 14 CFR Part 154, Acquisition of Land for Public Airports Under the Airport and Airway Development Act of 1970. (Removed from Title 14)

rr. 14 CFR Part 157, Notice of Construction, Alteration, Activation, and Deactivation of Airports.

ss. Order 1050.1, Policies and Procedures for Considering Environmental Impacts.

tt. Order 5050.4, Airport Environmental Handbook.

uu. Order 5100.38, Airport Improvement Program (AIP) Handbook.

vv. Order 7400.2, Procedures for Handling Airspace Matters.

ww. Order 8200.1, United States Standard Flight Inspection Manual.

xx. Order 8260.3, United States Standard for Terminal Instrument Procedures (TERPS).

4. AIRPORT REFERENCE CODE (ARC). The ARC is a coding system used to relate airport design criteria to the operational and physical characteristics of the airplanes intended to operate at the airport.

a. Coding System. The airport reference code has two components relating to the airport design aircraft. The first component, depicted by a letter, is the *aircraft approach category* and relates to aircraft approach speed (operational characteristic). The second component, depicted by a Roman numeral, is the *airplane design group* and relates to airplane wingspan or tailheight (physical characteristics), whichever is the most restrictive. Generally, runways standards are related to aircraft approach speed, airplane wingspan, and designated or planned approach visibility minimums. Taxiway and taxilane standards are related to airplane design group.

b. Airport Design. Airport design first requires selecting the ARC(s), then the lowest designated or planned approach visibility minimums for each runway, and then applying the airport design criteria associated with the airport reference code and the designated or planned approach visibility minimums.

(1) An upgrade in the first component of the ARC may result in an increase in airport design standards. Table 1-1 depicts these increases.

(2) An upgrade in the second component of the ARC generally will result in a major increase in airport design standards.

(3) An airport upgrade to provide for lower approach visibility minimums may result in an increase in airport design standards. Table 1-2 depicts these increases.

(4) Operational minimums are based on current criteria, runways, airspace, and instrumentation. Unless this is taken into consideration in the development of the airport, the operational minimums may be other than proposed.

(5) For airports with two or more runways, it may be desirable to design all airport elements to meet the requirements of the most demanding ARC. However, it may be more practical to design some airport elements, e.g., a secondary runway and its associated taxiway, to standards associated with a lesser demanding ARC.

5. AIRPORT LAYOUT PLAN. An Airport Layout Plan (ALP) is a scaled drawing of existing and proposed land and facilities necessary for the operation and development of the airport. Any airport will benefit from a carefully developed plan that reflects current FAA design standards and planning criteria. For guidance on developing Airport Master Plans, refer to AC 150/5070-6, *Airport Master Plans.*

a. FAA-Approved ALP. All airport development carried out at Federally obligated airports must be done in accordance with an FAA-approved ALP. The FAA-approved ALP, to the extent practicable, should conform to the FAA airport design standards existing at the time of its approval. Due to unique site, environmental, or other constraints, the FAA may approve an ALP not fully complying with design standards. Such approval requires an FAA study and finding that the proposed modification is safe for the specific site and conditions. When the FAA upgrades a standard, airport owners should, to the extent practicable, include the upgrade in the ALP before starting future development.

b. Guidance. AC 150/5070-6, Airport Master Plans, contains background information on the development of ALPs, as well as a detailed listing of the various components that constitute a well-appointed ALP.

c. Electronic Plans. The FAA recommends the development of electronic ALPs where practical.

6. MODIFICATION OF AIRPORT DESIGN STANDARDS TO MEET LOCAL CONDITIONS. "Modification to standards" means any change to FAA design standards other than dimensional standards for runway safety areas. Unique local conditions may require modification to airport design standards for a specific airport. A modification to an airport design standard related to new construction, reconstruction, expansion, or upgrade on an airport which received Federal aid requires FAA approval. The request for modification should show that the modification will provide an acceptable level of safety, economy, durability, and workmanship. Appendixes 8 and 9 discuss the relationship between airplane physical characteristics and the design of airport elements. This rationale along with the computer program cited in appendix 11 may be used to show that the modification will provide an acceptable level of safety for the specified conditions, including the type of aircraft.

7. NOTICE TO THE FAA OF AIRPORT DEVELOPMENT. 14 CFR Part 157, Notice of Construction, Activation, and Deactivation of Airports, requires persons proposing to construct, activate, or deactivate an airport to give notice of their intent to the FAA. The notice applies to proposed alterations to the takeoff and landing areas, traffic patterns, and airport use, e.g., a change from private-use to public-use.

a. Notice Procedure. 14 CFR Part 157 requires airport proponents to notify the appropriate FAA Airports Regional or District Office at least 30 days before construction, alteration, deactivation, or the date of the proposed change in use. In an emergency involving essential public service, health, or safety, or when delay would result in a hardship, a proponent may notify the FAA by telephone and submit Form 7480-1, Notice of Landing Area Proposal, within 5 days.

b. The Notice. The notice consists of a completed FAA Form 7480-1, a layout sketch, and a location map. The layout sketch should show the airport takeoff and landing area configuration in relation to buildings, trees, fences, power lines, and other similar significant features. The preferred type of location map is the 7.5 minute U.S. Geological Survey

Quadrangle Map showing the location of the airport site. Form 7480-1 lists FAA Airports Office addresses.

c. FAA Action. The FAA evaluates the airport proposal for its impact upon the: safe and efficient use of navigable airspace; operation of air navigation facilities; existing or potential airport capacity; and safety of persons and property on the ground. The FAA notifies proponents of the results of the FAA evaluation.

d. Penalty for Failure to Provide Notice. Persons who fail to give notice are subject to civil penalty.

8. NOTICE TO THE FAA OF PROPOSED CONSTRUCTION. 14 CFR Part 77, Objects Affecting Navigable Airspace, requires persons proposing any construction or alteration described in 14 CFR Section 77.13(a) to give 30-day notice to the FAA of their intent. This includes any construction or alteration of structures more than 200 feet (61 m) in height above the ground level or at a height that penetrates defined imaginary surfaces located in the vicinity of a public-use airport.

a. Airport Data Requirements. Future airport development plans and feasibility studies on file with the FAA may influence the determinations resulting from 14 CFR Part 77 studies. To assure full consideration of future airport development in 14 CFR Part 77 studies, airport owners must have their plans on file with the FAA. The necessary plan data includes, as a minimum, planned runway end coordinates, elevation, and type of approach for any new runway or runway extension.

b. Penalty for Failure to Provide Notice. Persons who knowingly and willingly fail to give such notice are subject to criminal prosecution.

9. FAA STUDIES. The FAA studies existing and proposed objects and activities, on and in the vicinity of public-use airports. These objects and activities are not limited to obstructions to air navigation, as defined in 14 CFR Part 77. These studies focus on the efficient use of the airport and the safety of persons and property on the ground. As the result of these studies, the FAA may resist, oppose, or recommend against the presence of objects or activities in the vicinity of a public-use airport that conflict with an airport planning or design standard/recommendation. This policy is stated as a notice on page 32152 of Volume 54, No. 149, of the Federal Register, dated Friday, August 4, 1989. FAA studies conclude:

a. Whether an obstruction to air navigation is a hazard to air navigation;

b. Whether an object or activity on or in the vicinity of an airport is objectionable;

c. Whether the need to alter, remove, mark, or light an object exists;

d. Whether to approve an Airport Layout Plan;

e. Whether proposed construction, enlargement, or modification to an airport would have an adverse effect on the safe and efficient use of navigable airspace; or

f. Whether a change in an operational procedure is feasible.

10. FEDERAL ASSISTANCE. The FAA administers a grant program (per Order 5100.38, Airport Improvement Program (AIP) Handbook) which provides financial assistance for developing public-use airports. Persons interested in this program can obtain information from FAA Airports Regional or District Offices. Technical assistance in airport development is also available from these offices.

11. ENVIRONMENTAL ASSESSMENTS. Federal grant assistance in, or ALP approval of, new airport construction or major expansion normally requires an assessment of potential environmental impacts in accordance with FAA Order 5050.4B, National Environmental Policy Act (NEPA) Implementing Instructions for Airport Projects, and the National Environmental Policy Act of 1969.

12. STATE ROLE. Many State aeronautics commissions or similar departments require prior approval and, in some instances, a license for the establishment and operation of an airport. Some States administer a financial assistance program similar to the Federal program and technical advice. Proponents should contact their respective State aeronautics commissions or departments for information on licensing and assistance programs.

13. LOCAL ROLE. Most communities have zoning ordinances, building codes, and fire regulations which may affect airport development. Some have or are in the process of developing codes or ordinances regulating environmental issues such as noise and air quality. Others may have specific procedures for establishing an airport.

14. to 199. RESERVED

a. Recommendations. Other objects which are desirable to clear, if practicable, are objects which do not have a substantial adverse effect on the airport but, if removed, will enhance operations. These include objects in the controlled activity area and obstructions to air navigation which are not covered in paragraph 211.a, especially those penetrating an approach surface. On a paved runway, the approach surface starts 200 feet (61 m) beyond the area usable for takeoff or landing, whichever is more demanding. On an unpaved runway, the approach surface starts at the end of the area usable for takeoff or landing.

212. RUNWAY PROTECTION ZONE (RPZ). The RPZ's function is to enhance the protection of people and property on the ground. This is achieved through airport owner control over RPZs. Such control includes clearing RPZ areas (and maintaining them clear) of incompatible objects and activities. Control is preferably exercised through the acquisition of sufficient property interest in the RPZ.

b. Standards.

(1) RPZ Configuration/Location. The RPZ is trapezoidal in shape and centered about the extended runway centerline. The controlled activity area and a portion of the Runway OFA are the two components of the RPZ (see Figure 2-3). The RPZ dimension for a particular runway end is a function of the type of aircraft and approach visibility minimum associated with that runway end. Table 2-4 provides standard dimensions for RPZs. Other than with a special application of declared distances, the RPZ begins 200 feet (60 m) beyond the end of the area usable for takeoff or landing. With a special application of declared distances, see Appendix 14, separate approach and departure RPZs are required for each runway end.

(a) The Runway OFA. Paragraph 307 contains the location, dimension, and clearing standards for the Runway OFA.

(b) The Controlled Activity Area. The controlled activity area is the portion of the RPZ beyond and to the sides of the Runway OFA.

(2) Land Use. In addition to the criteria specified in paragraph 211, the following land use criteria apply within the RPZ:

(a) While it is desirable to clear all objects from the RPZ, some uses are permitted, provided they do not attract wildlife (see paragraph 202.g., *Wildlife Hazards,* and Appendix 17 for dimensional standards), are outside of the Runway OFA, and do not interfere with navigational aids. Automobile parking facilities, although discouraged, may be permitted, provided the parking facilities and any associated appurtenances, in addition to meeting all of the preceding conditions, are located outside of the object free area extension (as depicted in Figure 2-3). Fuel storage facilities should not be located in the RPZ.

(b) Land uses prohibited from the RPZ are residences and places of public assembly. (Churches, schools, hospitals, office buildings, shopping centers, and other uses with similar concentrations of persons typify places of public assembly.) Fuel storage facilities should not be located in the RPZ.

c. Recommendations. Where it is determined to be impracticable for the airport owner to acquire and plan the land uses within the entire RPZ, the RPZ land use standards have recommendation status for that portion of the RPZ not controlled by the airport owner.

d. FAA Studies of Objects and Activities in the Vicinity of Airports. The FAA policy is to protect the public investment in the national airport system. To implement this policy, the FAA studies existing and proposed objects and activities, both off and on public-use airports, with respect to their effect upon the safe and efficient use of the airports and safety of persons and property on the ground. These objects need not be obstructions to air navigation, as defined in 14 CFR Part 77. As the result of a study, the FAA may issue an advisory recommendation in opposition to the presence of any off-airport object or activity in the vicinity of a public-use airport that conflicts with an airport planning or design standard or recommendation.

213. to 299. RESERVED

Table 2-1. Runway Separation Standards for aircraft approach categories A & B

ITEM	DIM 1/	AIRPLANE DESIGN GROUP				
		I 2/	I	II	III	IV
Visual runways and runways with not lower than ¾-statute mile (1200 m) approach visibility minimums						
Runway Centerline to:						
Parallel Runway Centerline	H	- Refer to paragraphs 207 and 208 -				
Holdline		- Refer to Advisory Circular 150/5340-1 -				
Taxiway/Taxilane Centerline 3/	D	150 ft 45 m	225 ft 67.5 m	240 ft 72 m	300 ft 90 m	400 ft 120 m
Aircraft Parking Area	G	125 ft 37.5 m	200 ft 60 m	250 ft 75 m	400 ft 120 m	500 ft 150 m
Helicopter Touchdown Pad		- Refer to Advisory Circular 150/5390-2 -				
Runways with lower than ¾-statute mile (1200 m) approach visibility minimums 4/						
Runway Centerline to:						
Parallel Runway Centerline	H	- Refer to paragraphs 207 and 208 -				
Holdline		- Refer to Advisory Circular 150/5340-1 -				
Taxiway/Taxilane Centerline 3/	D	200 ft 60 m	250 ft 75 m	300 ft 90 m	350 ft 105 m	400 ft 120 m
Aircraft Parking Area	G	400 ft 120 m	400 ft 120 m	400 ft 120 m	400 ft 120 m	500 ft 150 m
Helicopter Touchdown Pad		- Refer to Advisory Circular 150/5390-2 -				

1/ Letters correspond to the dimensions on Figure 2-1.

2/ These dimensional standards pertain to facilities for small airplanes exclusively.

3/ The taxiway/taxilane centerline separation standards are for sea level. At higher elevations, an increase to these separation distances may be required to keep taxiing and holding airplanes clear of the OFZ (refer to paragraph 206).

4/ For approaches with visibility less than ½-statute miles, runway centerline to taxiway/taxilane centerline separation increases to 400 feet (120 m).

Table 2-2. Runway Separation Standards for aircraft approach categories C & D

ITEM	DIM 1/	AIRPLANE DESIGN GROUP					
		I	II	III	IV	V	VI
Visual runways and runways with not lower than ¾-statute mile (1200 m) approach visibility minimums							
Runway Centerline to:							
Parallel Runway Centerline	H	- Refer to paragraphs 207 and 208 -					
Holdline		- Refer to Advisory Circular 150/5340-1 -					
Taxiway/Taxilane Centerline 2/	D	300 ft 90 m	300 ft 90 m	400 ft 120 m	400 ft 120 m	3/ 3/	500 ft 150 m
Aircraft Parking Area	G	400 ft 120 m	400 ft 120 m	500 ft 150 m	500 ft 150 m	500 ft 150 m	500 ft 150 m
Helicopter Touchdown Pad		- Refer to Advisory Circular 150/5390-2 -					
Runways with lower than ¾-statute mile (1200 m) approach visibility minimums							
Runway Centerline to:							
Parallel Runway Centerline	H	- Refer to paragraphs 207 and 208 -					
Holdline		- Refer to Advisory Circular 150/5340-1 -					
Taxiway/Taxilane Centerline 2/	D	400 ft 120 m	400 ft 120 m	400 ft 120 m	400 ft 120 m	3/ 4/ 3/ 4/	5/ 5/
Aircraft Parking Area	G	500 ft 150 m	500 ft 150 m	500 ft 150 m	500 ft 150 m	500 ft 150 m	500 ft 150 m
Helicopter Touchdown Pad		- Refer to Advisory Circular 150/5390-2 -					

1/ Letters correspond to the dimensions on Figure 2-1.

2/ The taxiway/taxilane centerline separation standards are for sea level. At higher elevations, an increase to these separation distances may be required to keep taxiing and holding airplanes clear of the OFZ (refer to paragraph 206).

3/ For Airplane Design Group V, the standard runway centerline to parallel taxiway centerline separation distance is 400 ft (120 m) for airports at or below an elevation of 1,345 feet (410 m); 450 feet (135 m) for airports between elevations of 1,345 feet (410 m) and 6,560 feet 2,000 m); and 500 feet (150 m) for airports above an elevation of 6,560 feet (2,000 m).

4/ For approaches with visibility less than ½-statute mile, the separation distance increases to 500 feet (150 m) plus required OFZ elevation adjustment.

5/ For approaches with visibility down to ½-statute mile, the separation distance increases to 500 feet (150 m) plus elevation_adjustment. For approaches with visibility less than ½-statute mile, the separation distance increases to 550 feet (168 m) plus required OFZ elevation adjustment.

Table 2-3. Taxiway and taxilane separation standards

ITEM	DIM 1/	AIRPLANE DESIGN GROUP					
		I	II	III	IV	V	VI
Taxiway Centerline to:							
Parallel Taxiway/ Taxilane Centerline	J	69 ft 21 m	105 ft 32 m	152 ft 46.5 m	215 ft 65.5 m	267 ft 81 m	324 ft 99 m
Fixed or Movable Object 2 and 3/	K	44.5 ft 13.5 m	65.5 ft 20 m	93 ft 28.5 m	129.5 ft 39.5 m	160 ft 48.5 m	193 ft 59 m
Taxilane Centerline to:							
Parallel Taxilane Centerline		64 ft 195. m	97 ft 29.5 m	140 ft 42.5 m	198 ft 60 m	245 ft 74.5 m	298 ft 91 m
Fixed or Movable Object 2 and 3/		39.5 ft 12 m	57.5 ft 17.5 m	81 ft 24.5 m	112.5 ft 34 m	138 ft 42 m	167 ft 51 m

1/ Letters correspond to the dimensions on Figure 2-1.

2/ This value also applies to the edge of service and maintenance roads.

3/ Consideration of the engine exhaust wake impacted from turning aircraft should be given to objects located near runway/taxiway/taxilane intersections.

The values obtained from the following equations may be used to show that a modification of standards will provide an acceptable level of safety. Refer to paragraph 6 for guidance on modification of standard requirements.

Taxiway centerline to parallel taxiway/taxilane centerline equals 1.2 times airplane wingspan plus 10 feet (3 m).

Taxiway centerline to fixed or movable object equals 0.7 times airplane wingspan plus 10 feet (3 m).

Taxilane centerline to parallel taxilane centerline equals 1.1 times airplane wingspan plus 10 feet (3 m).

Taxilane centerline to fixed or movable object equals 0.6 times airplane wingspan plus 10 feet (3 m).

a. Dimensions. The clearway must be at least 500 feet (150 m) wide centered on the runway centerline. The practical limit for clearway length is 1,000 feet (300 m).

b. Clearway Plane Slope. The clearway plane slopes upward with a slope not greater than 1.25 percent.

c. Clearing. Except for threshold lights no higher than 26 inches (66 cm) and located off the runway sides, no object or terrain may protrude through the clearway plane. The area over which the clearway lies need not be suitable for stopping aircraft in the event of an aborted takeoff.

d. Control. An airport owner interested in providing a clearway should be aware of the requirement that the clearway be under its control, although not necessarily by direct ownership. The purpose of such control is to ensure that no fixed or movable object penetrates the clearway plane during a takeoff operation.

e. Notification. When a clearway is provided, the clearway length and the declared distances, as specified in appendix 14, paragraph 7, shall be provided in the Airport/Facility Directory (and in the Aeronautical Information Publication (AIP), for international airports) for each operational direction.

309. STOPWAY STANDARDS. A stopway is an area beyond the takeoff runway, centered on the extended runway centerline, and designated by the airport owner for use in decelerating an airplane during an aborted takeoff. It must be at least as wide as the runway and able to support an airplane during an aborted takeoff without causing structural damage to the airplane. Their limited use and high construction cost, when compared to a full-strength runway that is usable in both directions, makes their construction less cost effective. See figure 3-7. When a stopway is provided, the stopway length and the declared distances, as specified in appendix 14, paragraph 7, shall be provided in the Airport/Facility Directory (and in the Aeronautical Information Publication (AIP), for international airports) for each operational direction.

310. RESCUE AND FIREFIGHTING ACCESS. Rescue and firefighting access roads are normally needed to provide unimpeded two-way access for rescue and firefighting equipment to potential accident areas. Connecting these access roads, to the extent practical, with the operational surfaces and other roads will facilitate aircraft rescue and firefighting operations.

a. Recommendation. It is recommended that the entire runway safety area (RSA) and runway protection zone (RPZ) be accessible to rescue and firefighting vehicles so that no part of the RSA or RPZ is more than 330 feet (100 m) from either an all weather road or a paved operational surface. Where an airport is adjacent to a body of water, it is recommended that boat launch ramps with appropriate access roads be provided.

b. All Weather Capability. Rescue and firefighting access roads are all weather roads designed to support rescue and firefighting equipment traveling at normal response speeds. Establish the widths of the access roads on a case-by-case basis considering the type(s) of rescue and firefighting equipment available and planned at the airport. The first 300 feet (90 m) adjacent to a paved operational surface should be paved. Where an access road crosses a safety area, the safety area standards for smoothness and grading control. For other design and construction features, use local highway specifications.

c. Road Usage. Rescue and firefighting access roads are special purpose roads, which supplement but do not duplicate or replace sections of a multi-purpose road system. Restricting their use to rescue and firefighting access equipment precludes their being a hazard to air navigation.

311. to 399. RESERVED.

Table 3-1. Runway design standards for aircraft approach category A & B visual runways and runways with not lower than 3/4-statute mile (1,200 m) approach visibility minimums

ITEM	DIM 1/	AIRPLANE DESIGN GROUP				
		I 2/	I	II	III	IV
Runway Length	A	- Refer to paragraph 301 -				
Runway Width	B	60 ft	60 ft	75 ft	100 ft	150 ft
		18 m	18 m	23 m	30 m	45 m
Runway Shoulder Width		10 ft	10 ft	10 ft	20 ft	25 ft
		3 m	3 m	3 m	6 m	7.5 m
Runway Blast Pad Width		80 ft	80 ft	95 ft	140 ft	200 ft
		24 m	24 m	29 m	42 m	60 m
Runway Blast Pad Length		60 ft	100 ft	150 ft	200 ft	200 ft
		18 m	30 m	45 m	60 m	60 m
Runway Safety Area Width	C	120 ft	120 ft	150 ft	300 ft	500 ft
		36 m	36 m	45 m	90 m	150 m
Runway Safety Area Length Prior to Landing Threshold 3/, 4/		240 ft	240 ft	300 ft	600 ft	600 ft
		72 m	72 m	90 m	180 m	180 m
Runway Safety Area Length Beyond RW End 3/, 4/	P	240 ft	240 ft	300 ft	600 ft	1,000 ft
		72 m	72 m	90 m	180 m	300 m
Obstacle Free Zone Width and Length		- Refer to paragraph 306 -				
Runway Object Free Area Width	Q	250 ft	400 ft	500 ft	800 ft	800 ft
		75 m	120 m	150 m	240 m	240 m
Runway Object Free Area Length Beyond RW End 5/	R	240 ft	240 ft	300 ft	600 ft	1,000 ft
		72 m	72 m	90 m	180 m	300 m

1/ Letters correspond to the dimensions on figures 2-1 and 2-3. Use this table only when both ends of the runway provide not lower than ¾-statute mile approach visibility minimums.

2/ These dimensional standards pertain to facilities for small airplanes exclusively.

3/ The runway safety area (RSA) length begins at each runway end when a stopway is not provided. When a stopway is provided, the length begins at the stopway end.

4/ The standard RSA length beyond the runway end may be reduced to the standard RSA length prior to landing threshold if a standard Engineered Materials Arresting System (EMAS) is provided. To qualify for this reduction, the EMAS installation must provide the ability to stop the critical aircraft exiting the end of the runway at 70 knots, and the runway must provide either instrument or visual vertical guidance for approaches in the opposite direction. See AC 150/5220-22.

5/ The runway object free area length beyond the end of the runway never exceeds the standard RSA length beyond the runway end as provided by note 4 above.

Table 3-2. Runway design standards for aircraft approach category A & B runways with lower than 3/4-statute mile (1,200 m) approach visibility minimums

ITEM	DIM 1/	AIRPLANE DESIGN GROUP				
		I 2/	I	II	III	IV
Runway Length	A	- Refer to paragraph 301 -				
Runway Width	B	75 ft	100 ft	100 ft	100 ft	150 ft
		23 m	30 m	30 m	30 m	45 m
Runway Shoulder Width		10 ft	10 ft	10 ft	20 ft	25 ft
		3 m	3 m	3 m	6 m	7.5 m
Runway Blast Pad Width		95 ft	120 ft	120 ft	140 ft	200 ft
		29 m	36 m	36 m	42 m	60 m
Runway Blast Pad Length		60 ft	100 ft	150 ft	200 ft	200 ft
		18 m	30 m	45 m	60 m	60 m
Runway Safety Area Width	C	300 ft	300 ft	300 ft	400 ft	500 ft
		90 m	90 m	90 m	120 m	150 m
Runway Safety Area Length Prior to Landing Threshold 3/, 4/		600 ft	600 ft	600 ft	600 ft	600 ft
		180 m	180 m	180 m	180 m	180 m
Runway Safety Area Length Beyond RW End 3/	P	600 ft	600 ft	600 ft	800 ft	1,000 ft
		180 m	180 m	180 m	240 m	300 m
Obstacle Free Zone Width and Length		- Refer to paragraph 306 -				
Runway Object Free Area Width	Q	800 ft	800 ft	800 ft	800 ft	800 ft
		240 m	240 m	240 m	240 m	240 m
Runway Object Free Area Length Beyond RW End 5/	R	600 ft	600 ft	600 ft	800 ft	1,000 ft
		180 m	180 m	180 m	240 m	300 m

1/ Letters correspond to the dimensions on figures 2-1 and 2-3. Use this table for both ends of the runway even when one end does not have lower than ¾-statute mile visibility minimums.

2/ These dimensional standards pertain to facilities for small airplanes exclusively.

3/ The runway safety area (RSA) length begins at each runway end when a stopway is not provided. When a stopway is provided, the length begins at the stopway end.

4/ The standard RSA length beyond the runway end may be reduced to the standard RSA length prior to landing threshold if a standard Engineered Materials Arresting System (EMAS) is provided. To qualify for this reduction, the EMAS installation must provide the ability to stop the critical aircraft exiting the end of the runway at 70 knots, and the runway must provide either instrument or visual vertical guidance for approaches in the opposite direction. See AC 150/5220-22.

5/ The runway object free area length beyond the end of the runway never exceeds the standard RSA length beyond the runway end as provided by note 4 above.

Table 3-3. Runway design standards for aircraft approach categories C & D

ITEM	DIM 1/	AIRPLANE DESIGN GROUP					
		I	II	III	IV	V	VI
Runway Length	A	- Refer to paragraph 301 -					
Runway Width	B	100 ft	100 ft	100 ft 2/	150 ft	150 ft	200 ft
		30 m	30 m	30 m 2/	45 m	45 m	60 m
Runway Shoulder Width 3/		10 ft	10 ft	20 ft 2/	25 ft	35 ft	40 ft
		3 m	3 m	6 m 2/	7.5 m	10.5 m	12 m
Runway Blast Pad Width		120 ft	120 ft	140 ft 2/	200 ft	220 ft	280 ft
		36 m	36 m	42 m 2/	60 m	66 m	84 m
Runway Blast Pad Length		100 ft	150 ft	200 ft	200 ft	400 ft	400 ft
		30 m	45 m	60 m	60 m	120 m	120 m
Runway Safety Area Width 4/	C	500 ft	500 ft	500 ft	500 ft	500 ft	500 ft
		150 m	150 m	150 m	150 m	150 m	150 m
Runway Safety Area Length Prior to Landing Threshold 5/, 6/		600 ft	600 ft	600 ft	600 ft	600 ft	600 ft
		180 m	180 m	180 m	180 m	180 m	180 m
Runway Safety Area Length Beyond RW End 5/, 6/	P	1,000 ft	1,000 ft	1,000 ft	1,000 ft	1,000 ft	1,000 ft
		300 m	300 m	300 m	300 m	300 m	300 m
Obstacle Free Zone Width and Length		- Refer to paragraph 306 -					
Runway Object Free Area Width	Q	800 ft	800 ft	800 ft	800 ft	800 ft	800 ft
		240 m	240 m	240 m	240 m	240 m	240 m
Runway Object Free Area Length Beyond RW End 7/	R	1,000 ft	1,000 ft	1,000 ft	1,000 ft	1,000 ft	1,000 ft
		300 m	300 m	300 m	300 m	300 m	300 m

1/ Letters correspond to the dimensions on figures 2-1 and 2-3.

2/ For Airplane Design Group III serving airplanes with maximum certificated takeoff weight greater than 150,000 pounds (68,100 kg), the standard runway width is 150 feet (45 m), the shoulder width is 25 feet (7.5 m), and the runway blast pad width is 200 feet (60 m).

3/ Design Groups V and VI normally require stabilized or paved shoulder surfaces.

4/ For Airport Reference Code C-I and C-11, a runway safety area width of 400 feet (120 m) is permissible. For runways designed after 2/28/83 to serve Aircraft Approach Category D, the runway safety area width increases 20 feet (6 m) for each 1,000 feet (300 m) of airport elevation above MSL. Refer to paragraph 305.

5/ The runway safety area (RSA) length begins at each runway end when a stopway is not provided. When a stopway is provided, the length begins at the stopway end.

6/ The standard RSA length beyond the runway end may be reduced to the standard RSA length prior to landing threshold if a standard Engineered Materials Arresting System (EMAS) is provided. To qualify for this reduction, the EMAS installation must provide the ability to stop the critical aircraft exiting the end of the runway at 70 knots, and the runway must provide either instrument or visual vertical guidance for approaches in the opposite direction. See AC 150/5220-22.

7/ The runway object free area length beyond the end of the runway never exceeds the standard RSA length beyond the runway end as provided by note 6 above.

Chapter 4. TAXIWAY AND TAXILANE DESIGN

400. INTRODUCTION. This chapter presents the design standards for taxiways, taxilanes, and associated airport elements.

401. DIMENSIONAL STANDARDS. Tables 4-1 and 4-2 present the dimensional standards for taxiway, taxilanes, and associated elements. Appendix 9 discusses the relationship between airplane physical characteristics and the design of taxiway and taxilane elements. The rationale presented there is useable, on a case-by-case basis, to adapt separation standards to meet unusual local conditions or to accommodate a specific airplane within an airplane design group.

402. TAXIWAY SHOULDERS. Provide stabilized or paved shoulders to reduce the possibility of blast erosion and engine ingestion problems associated with jet engines that overhang the edge of the taxiway pavement. Table 4-1 presents taxiway shoulder width standards. Soil with turf not suitable for this purpose requires a stabilized or low-cost paved surface. Chapter 8 contains additional information on this subject.

403. TAXIWAY SAFETY AREA (TSA). The taxiway safety area is centered on the taxiway centerline. Table 4-1 presents taxiway safety area dimensional standards.

a. Design Standards. The taxiway safety area shall be:

(1) cleared and graded and have no potentially hazardous ruts, humps, depressions, or other surface variations;

(2) drained by grading or storm sewers to prevent water accumulation;

(3) capable, under dry conditions, of supporting snow removal equipment, aircraft rescue and firefighting equipment, and the occasional passage of aircraft without causing structural damage to the aircraft, and

(4) free of objects, except for objects that need to be located in the taxiway safety area because of their function. Objects higher than 3 inches (7.6 cm) above grade should be constructed on low impact resistant supports (frangible mounted structures) of the lowest practical height with the frangible point no higher than 3 inches (7.6 cm) above grade. Other objects, such as manholes, should be constructed at grade. In no case should their height exceed 3 inches (7.6 cm) above grade.

b. Construction Standards. Compaction of taxiway safety areas shall be to FAA specification P-152 found in AC 150/5370-10.

404. TAXIWAY AND TAXILANE OBJECT FREE AREA (OFA). The taxiway and taxilane OFAs are centered on the taxiway and taxilane centerlines as shown in figures A9-2, A9-3, and A9-4.

a. The taxiway and taxilane OFA clearing standards prohibit service vehicle roads, parked airplanes, and above ground objects, except for objects that need to be located in the OFA for air navigation or aircraft ground maneuvering purposes. Vehicles may operate within the OFA provided they give right of way to oncoming aircraft by either maintaining a safe distance ahead or behind the aircraft or by exiting the OFA to let the aircraft pass. Provide vehicular exiting areas along the outside of the OFA where required. Table 4-1 specifies the standard dimensions for OFAs.

b. OFA clearance fillets shall be provided at intersections and turns where curved taxiway or taxilane centerline pavement markings, reflectors, or lighting are provided. The OFA clearance fillets shall be configured to provide the standard wingtip clearance for the using aircraft. Appendix 9 provides guidance for finding the wingtip trace and Table 4-3 specifies the standard wingtip clearances.

c. Offset taxilane pavement markings may be used at existing facilities where it is impracticable to upgrade the facility to existing standards or as a temporary measure to assure adequate wingtip clearance until upgraded facilities meeting design standards are completed. The offset taxilane pavement markings should be located on an arc offset and parallel to the curved centerline. The radius of the offset arc should be approximately $(R^2 + d^2)^{0.5}$. R being the radius of the taxilane turn and d being a representative distance from the center of cockpit to the center of the main undercarriage of the larger wingspan aircraft. Increasing the offset radius increases the clearance inside of the curve while decreasing the clearance outside of the curve. Both clearances for each of the larger wingspan aircraft need to be examined. Where offset taxilane pavement markings are provided, centerline lighting or reflectors are required.

405. PARALLEL TAXIWAY. A basic airport consists of a runway with a full-length parallel taxiway, an apron, and connecting transverse taxiways between the runway, parallel taxiway, and the apron.

a. Separation Distance. Tables 2-1 and 2-2 show the standard separation distances between parallel taxiways and runways.

b. Centerline Profile. The centerline profile of a parallel taxiway should prevent excessive longitudinal grades on crossover or transverse taxiways. Chapter 5 provides the standards for taxiway longitudinal grades.

406. TAXIWAY INTERSECTIONS. An airplane pilot may negotiate a taxiway turn by either maintaining the cockpit over the centerline or by judgmental oversteering.

a. Cockpit Over Centerline. Taxiway intersections designed to accommodate cockpit over centerline steering require more pavement, but enable more rapid movement of traffic with minimal risk of aircraft excursions from the pavement surface. Intersections should be designed to accommodate cockpit over centerline steering to the extent practicable. Where taxiway centerline lighting or reflectors are installed, intersections shall be designed for cockpit over centerline steering.

b. Judgmental Oversteering. Taxiway intersections designed to accommodate the judgmental oversteering method of maneuvering require the least pavement widening. However, judgmental oversteering requires complex maneuvering, increases the risk of aircraft excursions from the pavement surface, and slows the flow of traffic.

c. Design. Figure 4-1 shows the most common designs of taxiway-taxiway intersections and tables 4-1 and 4-2 present associated dimensional standards. The designs also apply to taxiway-apron intersections. Adjusting these shapes to achieve more efficient construction procedures may be desirable and should be a cost basis consideration. For example, squaring the venturi areas or designing the pavement fillets, by using either the methodology presented in appendix 10 or a computer program to provide the standard taxiway edge safety margin, may produce a more cost-effective design. Figure 4-4 is a printout from such a program that is operable on an IBM PC compatible computer. Appendix 11 gives details on availability of this program.

d. Limitations. The criteria depicted in figure 4-1 apply to taxiway-taxiway intersections and taxiway-apron intersections and not to runway-taxiway intersections. Discussion and details on runway-taxiway intersections with accompanying figures are in subsequent paragraphs.

407. ENTRANCE TAXIWAYS.

a. Dual Use. An entrance taxiway also serves as the final exit taxiway on a bidirectional runway. It is normally in the form of an "L" taxiway intersection with a right angle connection to the runway.

b. Radius. The centerline radius of curvature should be as large as possible to accommodate higher speeds. The radius is dependent on the separation distance between the runway and parallel taxiway.

c. Design. The entrance design shown in figure 4-5, with a centerline radius of 200 feet (60 m), will allow entrance speeds of 20 mph (30 km per hour), the minimum design speed for the taxiway system. Larger radii will permit higher entrance speeds. The design width requires at least the taxiway edge safety margin specified in table 4-1.

408. BYPASS TAXIWAYS. Air traffic personnel at busy airports encounter occasional bottlenecks when moving airplanes ready for departure to the desired takeoff runway. Bottlenecks result when a preceding airplane is not ready for takeoff and blocks the access taxiway. Bypass taxiways provide flexibility in runway use by permitting ground maneuvering of steady streams of departing airplanes. An analysis of existing and projected traffic indicates if a bypass taxiway will enhance traffic flow.

a. Location. Bypass taxiway locations are normally at or near the runway end. They can be parallel to the main entrance taxiway serving the runway, as shown in figure 4-6, or used in combination with the dual parallel taxiways, as depicted in figure 4-7.

b. Design. Bypass taxiway widths require at least the standard taxiway edge safety margin. The separation and clearance standards are the same as for parallel taxiways.

409. HOLDING BAYS. Providing holding bays instead of bypass taxiways also enhances capacity. Holding bays provide a standing space for airplanes awaiting final air traffic control (ATC) clearance and to permit those airplanes already cleared to move to their runway takeoff position. By virtue of their size, they enhance maneuverability for holding airplanes while also permitting bypass operations. A holding bay should be provided when runway operations reach a level of 30 per hour.

a. Location. Although the most advantageous position for a holding bay is adjacent to the taxiway serving the runway end, it may be satisfactory in other locations. Place holding bays to keep airplanes out of the OFZ and the runway safety area, as well as avoiding interference with instrument landing system operations.

b. Design. Figure 4-8 shows some typical holding bay configurations. Paving the area between dual parallel taxiways may provide an acceptable holding bay.

410. TURNAROUNDS. A turnaround can serve as a combination holding bay and bypass taxiway, when it is not economically feasible to provide a parallel taxiway. The turnaround needs to extend far enough away from the runway so airplanes will be able to remain behind the hold line. Figure 4-9 shows a taxiway turnaround.

411. DUAL PARALLEL TAXIWAYS. To accommodate high-density traffic, airport planners should consider multiple access to runways. For example, to facilitate ATC handling when using directional flow releases, e.g., south departure, west departure, etc., airplanes may be selectively queued on dual (or even triple) parallel taxiways. A dual parallel taxiway need not extend the full length of runway. Crossover taxiways between dual parallel taxiways increase flexibility. See figure 4-10.

412. TAXIWAY BETWEEN PARALLEL RUNWAYS. A taxiway located between two parallel runways requires a centerline separation from each runway to meet the standard separation distance specified in table 2-1.

413. EXIT TAXIWAYS. Design and locate exit taxiways to meet the operational requirements of the airport.

a. Efficiency. Appendix 9 provides guidance on exit taxiway location utilization. AC 150/5060-5 provides guidance on the effect of exit taxiway location on runway capacity. Exit taxiways should permit free flow to the parallel taxiway or at least to a point where air traffic control considers the airplane clear of the runway.

b. Type. A decision to provide a right-angled exit taxiway or a standard acute-angled exit taxiway rests upon an analysis of the existing and contemplated traffic. The purpose of an acute-angled exit taxiway, commonly referred to as a "high speed exit," is to enhance airport capacity. However, when the design peak hour traffic is less than 30 operations (landings and takeoffs), a properly located right-angled exit taxiway will achieve an efficient flow of traffic.

c. Separation. The type of exit taxiway influences runway and taxiway separation. The standard runway-taxiway separations specified in tables 2-1 and 2-2 are satisfactory for right-angled exit taxiways. A separation distance of at least 600 feet (180 m) is necessary for an efficient acute-angled exit taxiway, which includes a reverse curve for "double-back" operations. The runway-taxiway separations specified in tables 2-1 and 2-2 are adequate for acute-angled exits where the taxiway traffic flow is in the direction of landing.

d. Configuration. Figure 4-1 illustrates the configuration for a right-angled exit taxiway. An entrance spiral of at least 30 degrees and 300 feet (90 m) in length should be provided. Figure 4-12 illustrates the standard acute-angled exit taxiway with a 30-degree angle of intersection and a 1,400-foot (420 m) entrance spiral. When runway capacity needs justify the additional cost, high-visibility taxiway centerline lights can be added and the exit taxiway widened by doubling the taxiway edge safety margin. These design enhancements will increase pilot acceptance of an exit. Figures 4-13 and 4-14 present a computer printout of layout data for a 1,400-foot (420 m) spiral exit using a program operable on IBM compatible equipment. Appendix 11 gives details on the availability of this program.

414. APRON TAXIWAYS AND TAXILANES. Requirements often exist to provide through-taxi routes across an apron and to provide access to gate positions or other terminal areas.

a. Apron Taxiways. Apron taxiways may be located either inside or outside the movement area. Apron taxiways require the same separations as other taxiways. When the apron taxiway is along the edge of the apron, locate its centerline inward from the apron edge at a distance equal to one-half of the width of the taxiway structural pavement. A shoulder is necessary along the outer edge in addition to the taxiway safety area and the separations specified in tables 2-1, 2-2, 2-3, and 4-1.

b. Taxilanes. Taxilanes are located outside the movement area. Taxilanes provide access from taxiways (usually an apron taxiway) to airplane parking positions and other terminal areas. When the taxilane is along the edge of the apron, locate its centerline inward from the apron edge at a distance equal to one-half of the width of the taxiway structural pavement and satisfy other apron edge taxiway criteria, i.e., a shoulder, safety area, and the separations specified in tables 2-1, 2-2, 2-3, and 4-1.

c. Visibility. Airport traffic control tower personnel require a clear line of sight to all apron taxiways under air traffic control (ATC). Although ATC is not responsible for controlling taxilane traffic, a clear line of sight to taxilanes is desirable.

415. END-AROUND TAXIWAYS. In an effort to increase operational capacity, airports have added dual and sometimes triple parallel runways, which can cause delays when outboard runway traffic has to cross active inboard runways to make its way to the terminal. To improve efficiency and provide a safe means of movement around the departure end of a runway, it might be feasible to construct a taxiway that allows aircraft to transition around the ends of the runway. This type of taxiway is called an End-Around Taxiway (EAT). See figure 4-15.

a. Design Considerations. End-around taxiways must remain outside of the standard runway safety area (RSA), which extends 1,000 feet along the centerline extended of the departure end of the runway (DER). In addition, the EAT must be entirely outside of the ILS critical area. An airspace study for each site should be performed to verify if the tail height of the critical design group aircraft operating on the EAT does not penetrate any FAA Order 8260.3 TERPS surface and meets the requirements of 14 CFR 121.189 for the net takeoff flight path to clear all obstacles either by a height of at least 35 feet vertically, or by at least 200 feet horizontally within the airport boundaries.

b. Visual Screen. The placement and configuration of EATs must take into account additional restrictions to prevent interfering with navigational aids, approaches and departures from the runway(s) with which they are associated. In order to avoid potential issues where pilots departing from a runway with an EAT might mistake an aircraft taxiing on the EAT for one actually crossing near the departure end of the runway, a visual screen type device may be required, depending on the elevation changes at a specific location. Through a partial

or complete masking effect, the visual screen will enable pilots to better discern when an aircraft is crossing the active runway versus operating on the EAT. The intent is to eliminate any false perceptions of runway incursions, which could lead to unnecessary aborted takeoffs, and alert pilots to actual incursion situations. A visual screen is required for any new EAT unless the elevation of the EAT centerline, at a point in line with the extended runway centerline, is at least 29 feet below the elevation at the DER, so the terrain creates a natural masking of the aircraft on the EAT. Research has shown that "masking" is accomplished at a height where a critical design group aircraft's wing-mounted engine nacelle would be blocked from view, as discerned from the V-1 point during take-off. DO not locate the visual screen structure within any runway safety area, taxiway obstacle free zone, critical ILS area, or should it penetrate the inner approach OFZ, the approach light plane or other TERPS surfaces.

(1) Screen Sizing. The size of the EAT visual screen is dependent on the runway geometry, the size of the critical design group aircraft operating at that particular airport (on both the departing and EAT), and the elevation relationship between the EAT and the departing runway.

(a) Horizontal Geometry. The width of the screen should be designed to be perceived to originate and end at the taxiway/runway hold line(s) at the DER from a position on the runway equivalent to V1 (take-off decision speed under maximum conditions) for the critical design group aircraft. In order to calculate the screen width, the distance to where the screen will be located beyond the runway end must first be determined. From the runway centerline location of V1 for the design aircraft, lines are drawn through the runway hold line position closest to the DER (normally derived from the Aircraft Holding Position Location in Advisory Circular 150/5340-18) and extended until they intersect with a line perpendicular to the runway at the screen location. See figure 4-16. Use the formula in Figure 4-17 to calculate the width of the visual screen.

(b) Vertical Geometry. The vertical height of the screen must be designed so the top of the screen will mask that portion of an aircraft that extends up to where the top of a wing-mounted engine nacelle would be of a critical design group aircraft taxiing on the EAT, as viewed from the cockpit of the same design group aircraft at the typical V1 point on the departure runway. In a situation where the EAT and the DER elevation are the same, the lower edge of the visual panels should be at the same vertical height as the centerline of the DER. The visual panels of the screen should extend from that point, up to the heights shown in table 4-4, depending on the design group aircraft. For the higher design groups, it is permissible to have the lower limit of the visual screen up to two (2) feet above the DER elevation, as shown in table 4-4. Variations in terrain at the site where the screen is to be constructed will need to be considered, and they may result in the screen being a sizeable distance off the ground. In the event the EAT and DER are at different elevations, either higher or lower, the overall screen height will have to be adjusted to ensure the same masking capability. Tables 4-5, 4-6, and 4-7 provide guidance on determining the height of the visual screen for the respective design groups if the elevation of the EAT is below the elevation of the DER. If the EAT is lower than 29 feet in elevation as compared to the centerline of the DER, a screen is not required. Table 4-8 provides guidance on determining the height of the visual screen for design groups 3 through 6 if the elevation of the EAT is above the elevation of the DER. It may be feasible to grade the site of the visual screen to allow for an additional 2-foot separation between the visual screen panels and the ground for mowing access.

(2) Screen Construction. The visual screen must be constructed to perform as designed and be durable, resistant to weather, frangible, and resistant to excessive wind speeds. The visual screen comprises foundations, frame, connection hardware, and front panels.

(a) Foundations. The foundation of the screen structure should be sufficient to hold the visual screen in position. The base of the foundation should have a sufficient mow strip around it to provide a safety buffer between mowing equipment and the screen structure.

(b) Frame. The frame structure of the screen should be constructed so it is durable, able to withstand wind loading, and frangible in construction. Figure 4-18 illustrates three methods for constructing the frame structure, depending on the overall height of the structure. The visual screen structure should be constructed to allow the front panels of the screen to be angled upward 12 (±1°) degrees from the vertical plane. All connections within the frame structure, the panels, and the foundations should be designed to break away from the structure in the event an aircraft impacts them.

(c) Front Panel. The front panel of the visual screen should be designed so it is conspicuous from the runway side of the screen. The front panel should be constructed of aluminum honeycomb material, as described in the next paragraph. The replaceable front panels should be 12 feet long and 4 feet high and attached to the frame structure so as to allow easy replacement if necessary. See figure 4-19.

(i) Aluminum Honeycomb Performance Criteria. The screen panels should be constructed of aluminum honeycomb material, as described in this section. The front panel of the screen should be constructed of 4-foot-tall panels, with the remaining difference added as required. For example,

three 4-foot-high panels plus one 1-foot-tall panel would be used to create a 13-foot-tall screen. These panels should be undersized by 0.50 inches to allow for thermal and deflection movements. The front and back panel faces should be specified to meet the required deflection allowance and should be a minimum 0.04 inches thick. The honeycomb material should be of sufficient thickness to meet the required deflection allowance, but should not be more than 3 inches thick. The internal aluminum honeycomb diameter should be of sufficient strength to meet the required deflection allowance, but should not be more than 0.75 inches in diameter. The panel edge closures should be of aluminum tube that is 1 inch times the thickness of the honeycomb and sealed. The deflection allowance for the screen is 0.50 inches maximum at the center of the panel when supported by four points at the corner of the panel. The panel faces should have a clear anodized finish on both front and back. The wind-loading deflection should be as specified in table 4-9.

(ii) Pattern. The front panel of the screen should visually depict a continuous, alternating red and white, diagonal striping of 12-foot-wide stripes set at a 45-degree angle ± five (5) degrees, sloped either all to the left or all to the right. To provide maximum contrast, the slope of the diagonal striping on the screen should be opposite the slope of aircraft tails operating in the predominant flow on the EAT, as shown in Figure 4-20.

(iii) Color. The front panel of the screen should be reflective red and white. The colors of the retroreflective sheeting used to create the visual screen must conform to Chromaticity Coordinate Limits shown in table 4-10, when measured in accordance with Federal Specification FP-85, Section 718.01(a), or ASTM D 4956.

(iv) Reflectivity. The surface of the front panel should be reflective on the runway side of the screen. Measurements should be made in accordance with ASTM E810, *Standard Test Method for Coefficient of Retro-reflection of Retro-reflective Sheeting.* The sheeting must maintain at least 90 percent of its values, as shown in table 4-11, with water falling on the surface, when measured in accordance with the standard rainfall test of FP-85, Section 718.02(a), and Section 7.10.0 of AASHTO M 268.

(v) Adhesion. The screen surface material must have a pressure-sensitive adhesive, which conforms to adhesive requirements of FP-85 (Class 1) and ASTM D 4956 (Class 1). The pressure-sensitive adhesive is recommended for application by hand or with a mechanical squeeze roller applicator. This type adhesive lends itself to large-scale rapid production of signs. Applications should be made with sheeting and substrate at temperatures above 65 F (18 C).

(3) Environmental Performance. The front panel of the screen surface material and all its required components must be designed for continuous outdoor use under the following conditions:

(a) Temperature. Screen surface material must withstand the following ambient temperature ranges: -4 degrees to +131 degrees F (-20 degrees to +55 degrees C).

(b) Wind Loading. The screen must be able to sustain exposure to wind velocities of at least 90 mph or the appropriate velocity rating anticipated for the specific airport location, whichever is greater.

(c) Rain. The screen surface material must withstand exposure to wind-driven rain.

(d) Sunlight. The screen surface material must withstand exposure to direct sunlight.

(e) Lighting. If required, the top edge of the visual screen should be illuminated with steady burning, L-810 FAA-approved obstruction lighting, as provided in the current version of AC 150/5345-43, and positioned as specified in paragraph 58(b) of the current version of AC 70/7460-1.

(4) Provision for Alternate Spacing of Visual Screen. If access is needed through the area where the visual screen is constructed, various sections of the screen may be staggered up to 50 feet from each other, as measured from the runway end, so an emergency vehicle can safely navigate between the staggered sections of screen. The sections of screen must be overlapped so the screen appears to be unbroken when viewed from the runway, at the V1 takeoff position.

(5) Frangibility. The screen structure, including all of its components, should be of the lowest mass possible to meet the design requirements so as to minimize damage should the structure be impacted. The foundations at ground level should be designed so they will shear on impact, the vertical supports should be designed so they will give way, and the front panels should be designed so they will release from the screen structure if impacted. The vertical support posts should be tethered at the base so they will not tumble when struck. Figure 4-21 provides information on how this level of frangibility can be achieved.

(6) Navigational Aid Consideration. The following considerations should be given when determining the siting and orientation of the visual screen. The visual screen may have adverse affects on navigational aids if it is not sited properly. The uniqueness and complexity of the airport siting environment requires that all installations be addressed on a case-by-case basis, so mitigations can be developed to ensure the installation of the visual screen does not significantly navigational aid performance.

(a) Approach Light Plane. No part of the visual screen may penetrate the approach light plane.

(b) Radar Interference. Research has shown that a visual screen erected on an airport equipped with Airport Surface Detection Equipment (ASDE) may reflect signals that are adverse to the ASDE operation. To avoid this, the visual screen should be tilted back/away (on the side facing the ASDE) 12 degrees (±1°). This will minimize or eliminate false radar targets generated by reflections off the screen surface. Examples of this tilting are shown in figure 4-18.

(c) Instrument Landing System (ILS) Interference. Research has shown that the presence of visual screens on a runway instrumented with an ILS system (localizer and glide slope) will generally not affect or interfere with the operation of the system. An analysis must be performed for glide slopes, especially null reference glide slopes, prior to the installation of the screens. The uniqueness and complexity of the airport siting environment requires that all installations be addressed on a case-by-case basis, so mitigations can be developed to ensure the installation of the visual screen does not significantly impact the performance of the ILS.

416. to 499. RESERVED.

Table 4-1. Taxiway dimensional standards

ITEM	DIM 1/	AIRPLANE DESIGN GROUP					
		I	II	III	IV	V	VI
Taxiway Width	W	25 ft	35 ft	50 ft 2/	75 ft	75 ft	100 ft
		7.5 m	10.5 m	15 m 2/	23 m	23 m	30 m
Taxiway Edge Safety Margin 3/		5 ft	7.5 ft	10 ft 4/	15 ft	15 ft	20 ft
		1.5 m	2.25 m	3 m 4/	4.5 m	4.5 m	6 m
Taxiway Pavement Fillet Configuration		- Refer to Table 4-2 -					
Taxiway Shoulder Width		10 ft	10 ft	20 ft	25 ft	35 ft 5/	40 ft 5/
		3 m	3 m	6 m	7.5 m	10.5 m 5/	12 m 5/
Taxiway Safety Area Width	E	49 ft	79 ft	118 ft	171 ft	214 ft	262 ft
		15 m	24 m	36 m	52 m	65 m	80 m
Taxiway Object Free Area Width		89 ft	131 ft	186 ft	259 ft	320 ft	386 ft
		27 m	40 m	57 m	79 m	97 m	118 m
Taxilane Object Free Area Width		79 ft	115 ft	162 ft	225 ft	276 ft	334 ft
		24 m	35 m	49 m	68 m	84 m	102 m

1/ Letters correspond to the dimensions on figures 2-1 and 4-1.

2/ For airplanes in Airplane Design Group III with a wheelbase equal to or greater than 60 feet (18 m), the standard taxiway width is 60 feet (18 m).

3/ The taxiway edge safety margin is the minimum acceptable distance between the outside of the airplane wheels and the pavement edge.

4/ For airplanes in Airplane Design Group III with a wheelbase equal to or greater than 60 feet (18 m), the taxiway edge safety margin is 15 feet (4.5 m).

5/ Airplanes in Airplane Design Groups V and VI normally require stabilized or paved taxiway shoulder surfaces.

Consideration should be given to objects near runway/taxiway/taxilane intersections, which can be impacted by exhaust wake from a turning aircraft.

The values obtained from the following equations may be used to show that a modification of standards will provide an acceptable level of safety. Refer to paragraph 6 for guidance on modification of standards requirements.

Taxiway safety area width equals the airplane wingspan;

Taxiway OFA width equals 1.4 times airplane wingspan plus 20 feet (6 m); and

Taxilane OFA width equals 1.2 times airplane wingspan plus 20 feet (6 m).

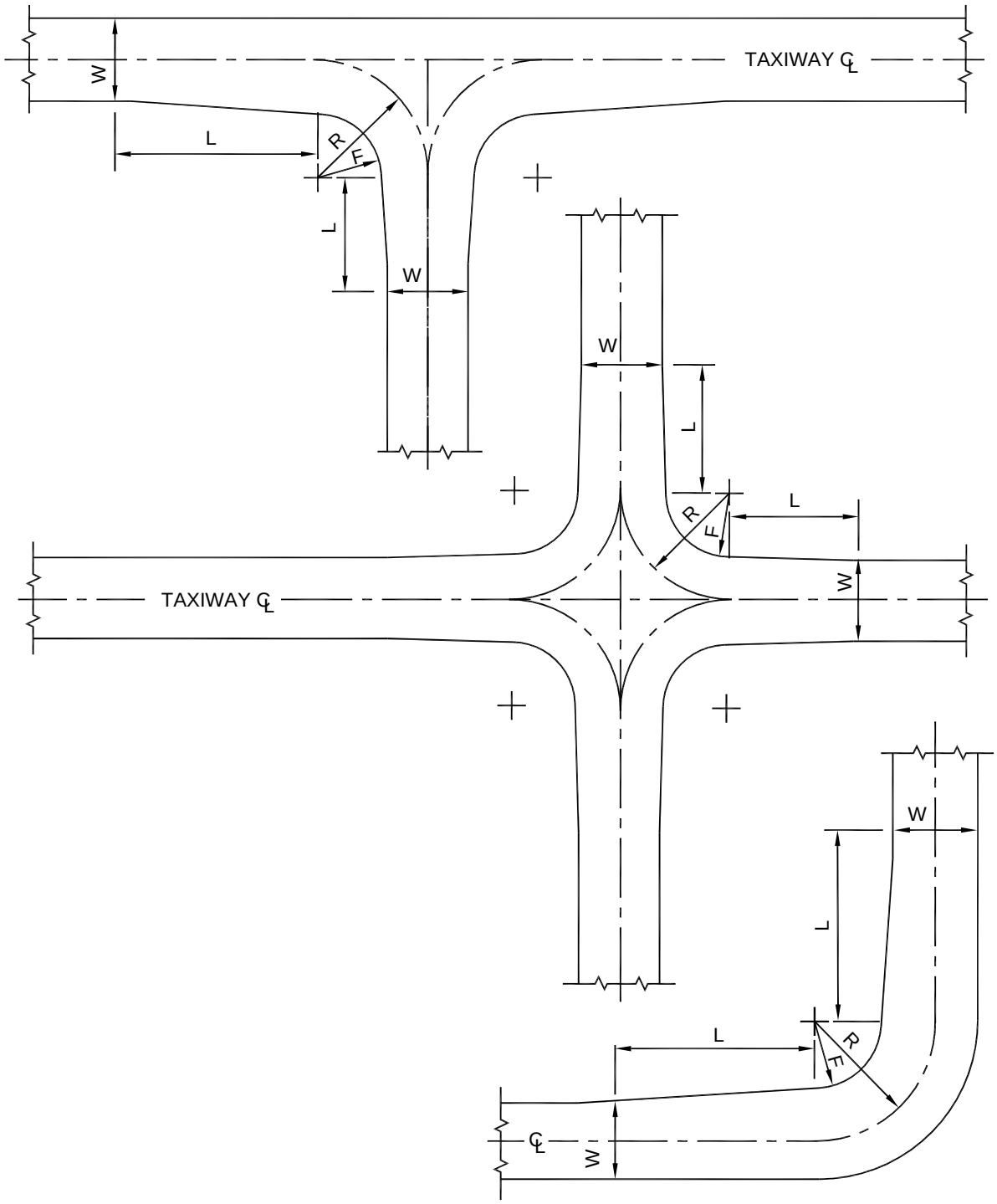

Figure 4-1. Taxiway intersection details

Table 4-2. Taxiway fillet dimensions

ITEM	DIM 1/	AIRPLANE DESIGN GROUP					
		I	II	III 2/	IV	V	VI
Radius of Taxiway Turn 3/	R	75 ft 22.5 m	75 ft 22.5 m	100 ft 30 m	150 ft 45 m	150 ft 45 m	170 ft 51 m
Length of Lead-in to Fillet	L	50 ft 15 m	50 ft 15 m	150 ft 45 m	250 ft 75 m	250 ft 75 m	250 ft 75 m
Fillet Radius for Tracking Centerline	F	60 ft 18 m	55 ft 16.5 m	55 ft 16.5 m	85 ft 25.5 m	85 ft 25.5 m	85 ft 25.5 m
Fillet Radius for Judgmental Oversteering Symmetrical Widening 4/	F	62.5 ft 18.75 m	57.5 ft 17.25 m	68 ft 20.4 m	105 ft 31.5 m	105 ft 31.5 m	110 ft 33 m
Fillet Radius for Judgmental Oversteering One Side Widening 5/	F	62.5 ft 18.75 m	57.5 ft 17.25 m	60 ft 18 m	97 ft 29 m	97 ft 29 m	100 ft 30 m

1/ Letters correspond to the dimensions on figure 4-1.

2/ Airplanes in Airplane Design Group III with a wheelbase equal to or greater than 60 feet (18 m) should use a fillet radius of 50 feet (15 m).

3/ Dimensions for taxiway fillet designs relate to the radius of taxiway turn specified. Figures 4-2 and 4-3 show taxiway fillet designs that provide the standard taxiway edge safety margin for a range of wheelbase and undercarriage width combinations. Custom-designed pavement fillet are necessary when the specified “R” or the undercarriage (also undercarriage to cockpit) dimensions fall outside of the standard taxiway edge safety margin of figures 4-2 and 4-3. The equations in appendix 10 or the use of a computer program offer this ability. Appendix 11 gives details on availability of this program.

4/ The center sketch of figure 4-1 displays pavement fillets with symmetrical taxiway widening.

5/ The lower sketch of figure 4-1 displays a pavement fillet with taxiway widening on one side.

Table 4-3. Wingtip clearance standards

ITEM	DIM	AIRPLANE DESIGN GROUP					
		I	II	III	IV	V	VI
Taxiway Wingtip Clearance		20 ft 6 m	26 ft 8 m	34 ft 10.5 m	44 ft 13.5 m	53 ft 16 m	62 ft 19 m
Taxilane Wingtip Clearance		15 ft 4.5 m	18 ft 5.5 m	22 ft 6.5 m	27 ft 8 m	31 ft 9.5 m	36 ft 11 m

The values obtained from the following equations may be used to show that a modification of standards will provide an acceptable level of safety. Refer to paragraph 6 for guidance on modification of standards requirements.

Taxiway wingtip clearance equals 0.2 times airplane wingspan plus 10 feet (3 m) and

Taxilane wingtip clearance equals 0.1 times airplane wingspan plus 10 feet (3 m).

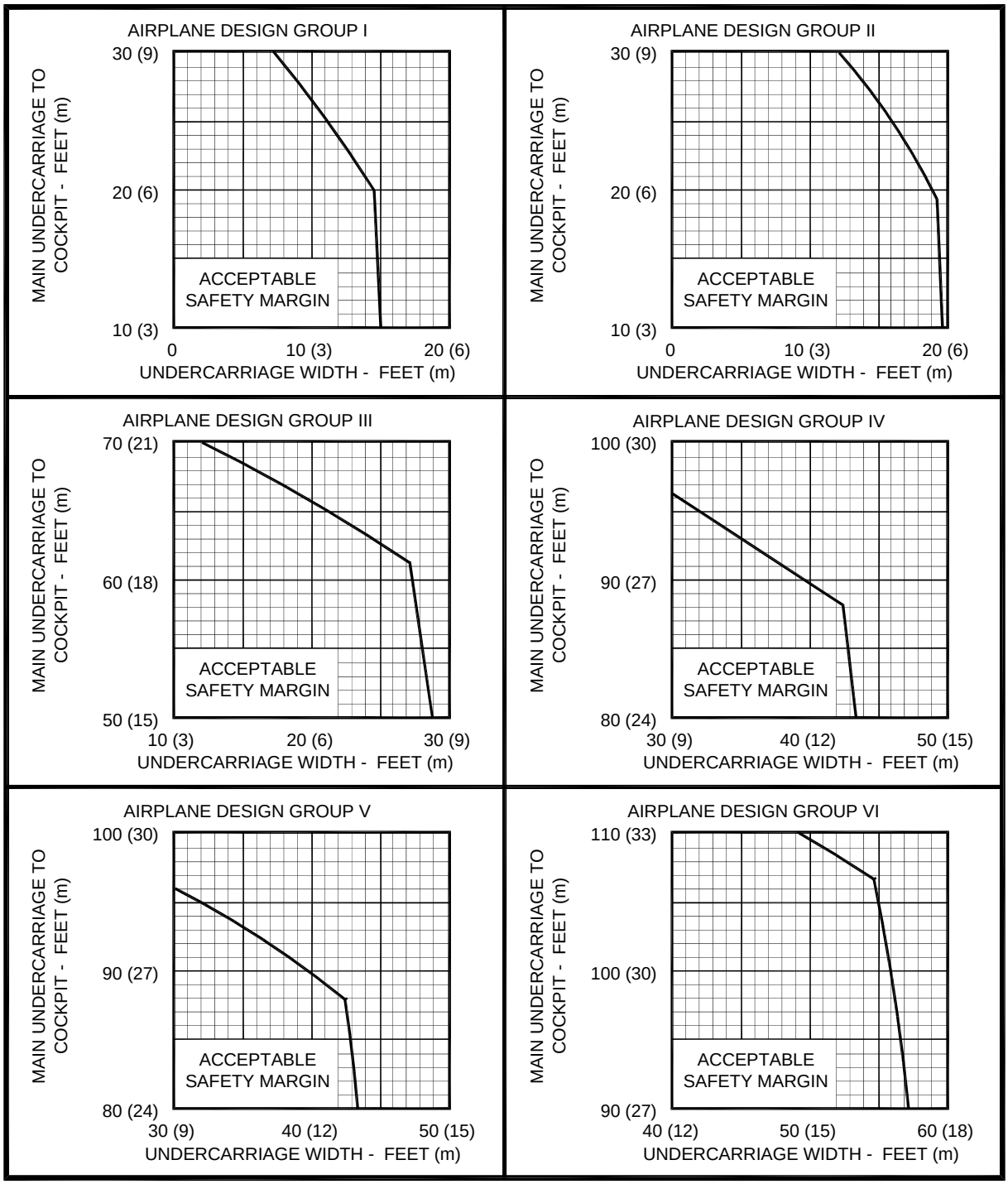

Figure 4-2. Maintaining cockpit over centerline

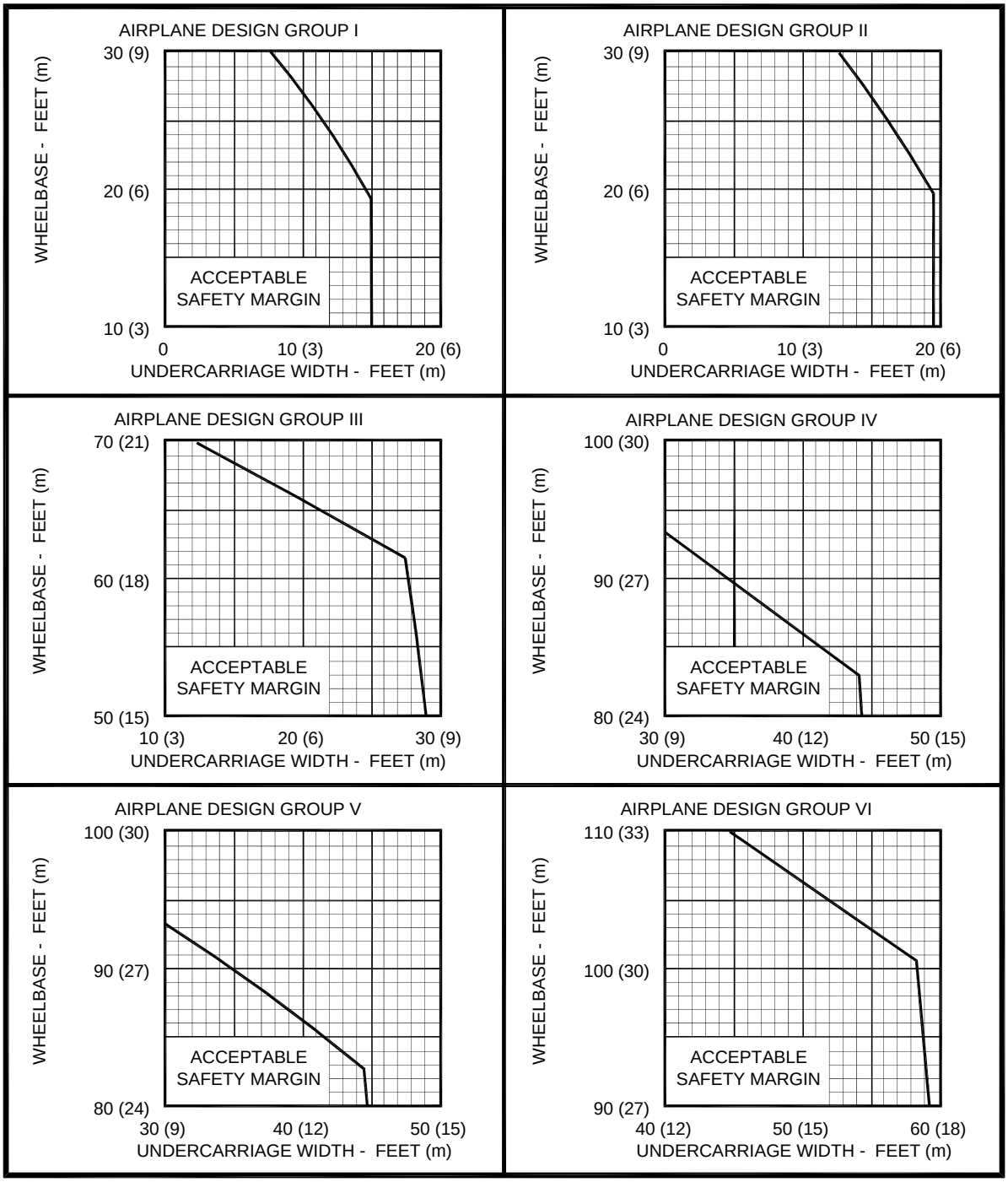

Figure 4-3. Judgmental oversteering

OFFSET DISTANCES ON A TAXIWAY INTERSECTION OR CURVE

Airplane wheelbase	84.000
Center of airplane cockpit to nosewheel	6.000
Airplane undercarriage width [1.15 x main gear track]	41.000
Taxiway edge safety margin	15.000
Taxiway width	75.000

AIRPLANE COCKPIT ON CENTERLINE

Entrance Station	0.000	Radius	150.000
Tangent Length	**********		
Intersection Angle	180.00000	Curve Length	471.239
Tangent Length	**********		
Exit Station	471.239	Radius	150.000

Entrance Station	471.239
Tangent Length	328.761
Exit Station	800.000

STATION	LEFT OFFSET	RIGHT OFFSET	STEERING ANGLES	X COORDINATE	Y COORDINATE	CENTERLINE ANGLE
0.000	43.57	28.58	0.000	0.000	0.000	0.00000
50.000	51.88	19.58	14.676	49.079	8.256	19.09859
100.000	56.92	15.00	23.246	92.755	32.117	38.19718
150.000	60.05	15.00	28.382	126.221	68.955	57.29577
200.000	62.03	15.00	31.528	145.791	114.714	76.39436
250.000	63.28	15.00	33.486	149.311	164.359	95.49295
300.000	64.08	15.00	34.717	136.395	212.422	114.59153
350.000	64.59	15.00	35.496	108.463	253.614	133.69012
400.000	64.74	15.00	35.992	68.591	283.399	152.78871
450.000	61.62	15.00	36.308	21.168	298.499	171.88730
471.239	58.29	15.00	36.405	0.000	300.000	180.00000
471.239	58.29	15.00	36.405	0.000	300.000	180.00000
500.000	51.79	19.88	26.870	-28.761	300.000	180.00000
550.000	44.70	26.51	15.609	-78.761	300.000	180.00000
600.000	40.74	30.32	8.993	-128.761	300.000	180.00000
650.000	38.50	32.52	5.167	-178.761	300.000	180.00000
700.000	37.22	33.79	2.966	-228.761	300.000	180.00000
750.000	0.00	0.00	1.702	-278.761	300.000	180.00000
800.000	0.00	0.00	0.977	-328.761	300.000	180.00000

NOTE: The offset distance is a perpendicular distance measured from the taxiway centerline. The hard surface needs to be widened at stations where the offset distance extends beyond the hard surface.

REFERENCE: AC 150/5300-13, AIRPORT DESIGN.

Figure 4-4. Example of pavement fillet computer program printout

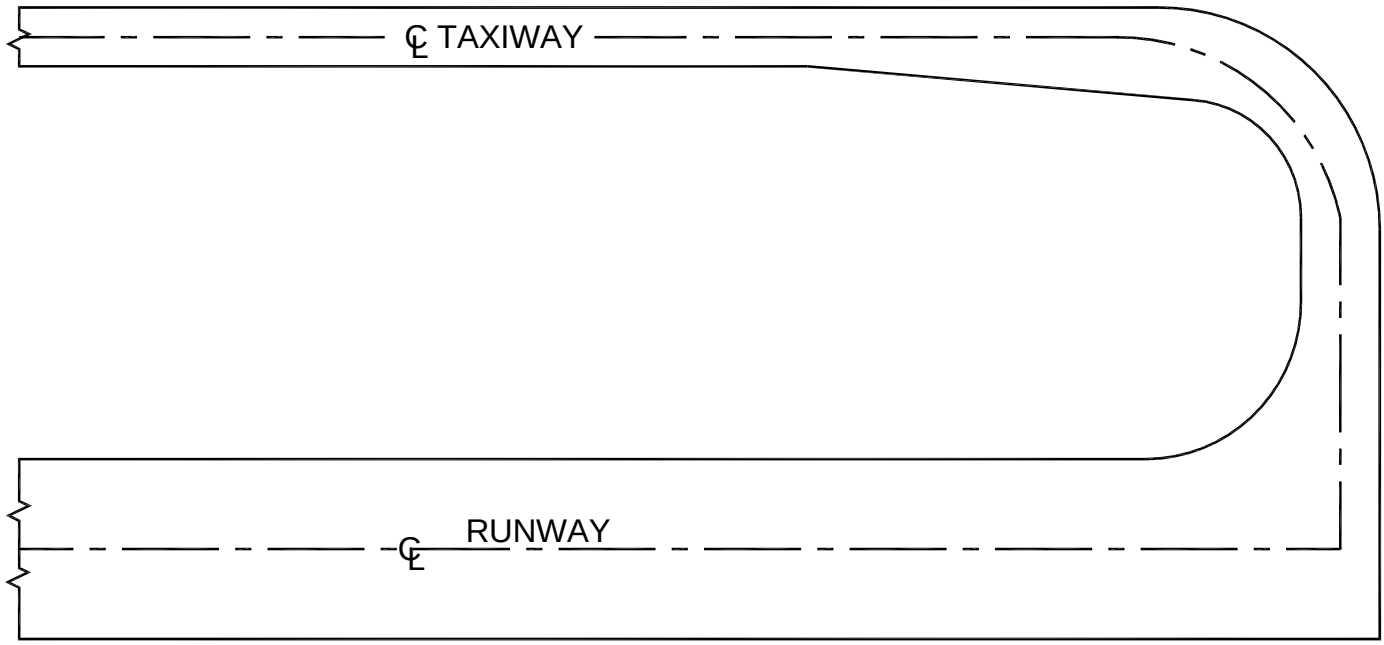

Figure 4-5. Entrance taxiway

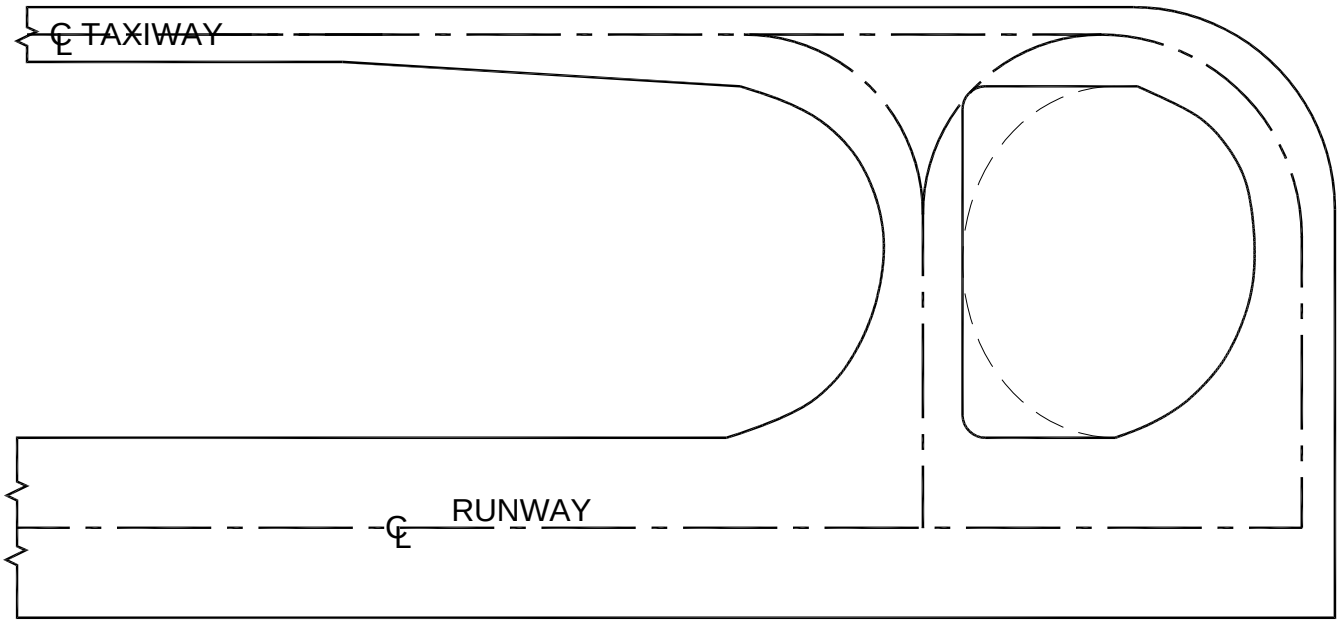

Figure 4-6. Bypass taxiway

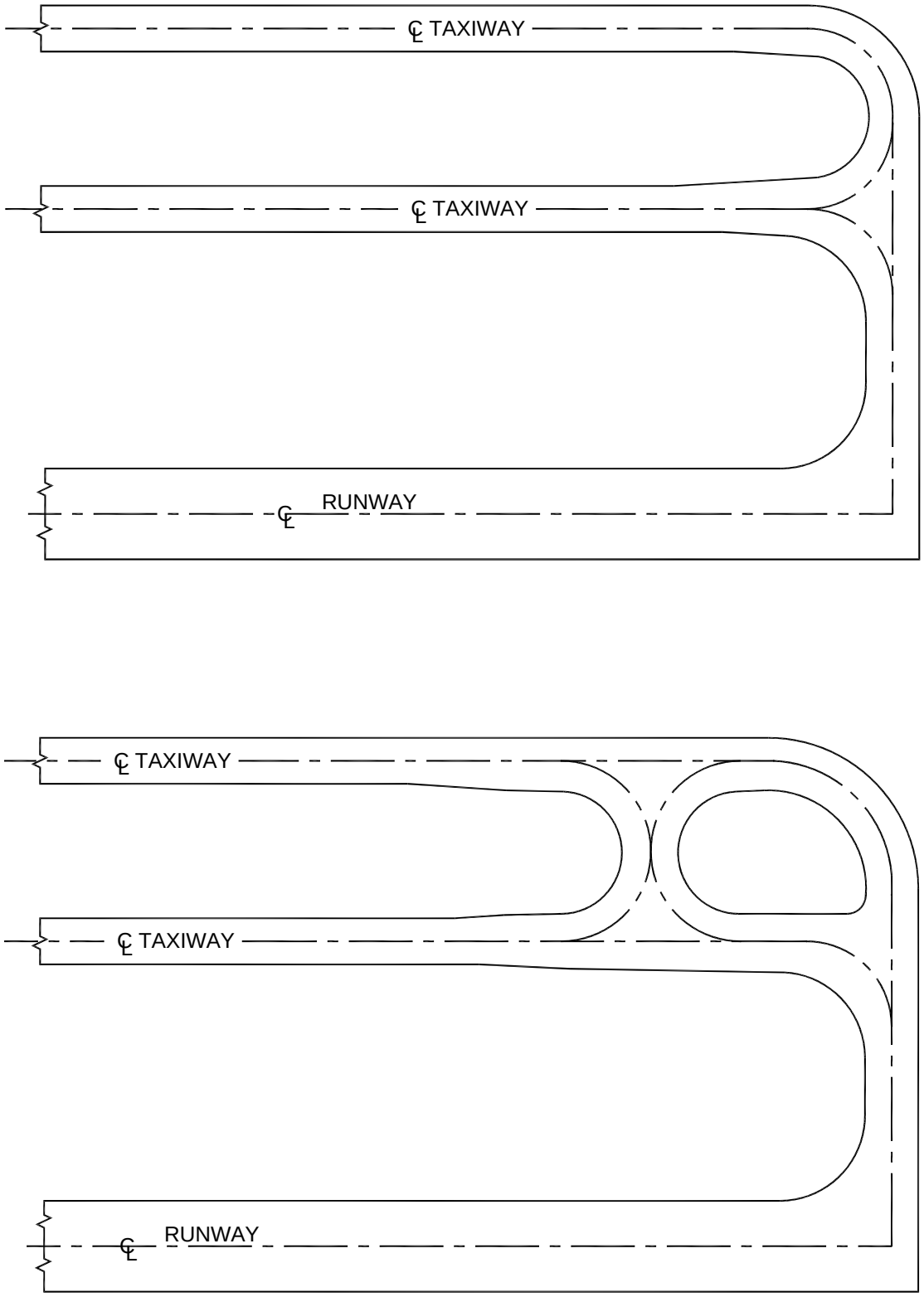

Figure 4-7. Dual parallel taxiway entrance

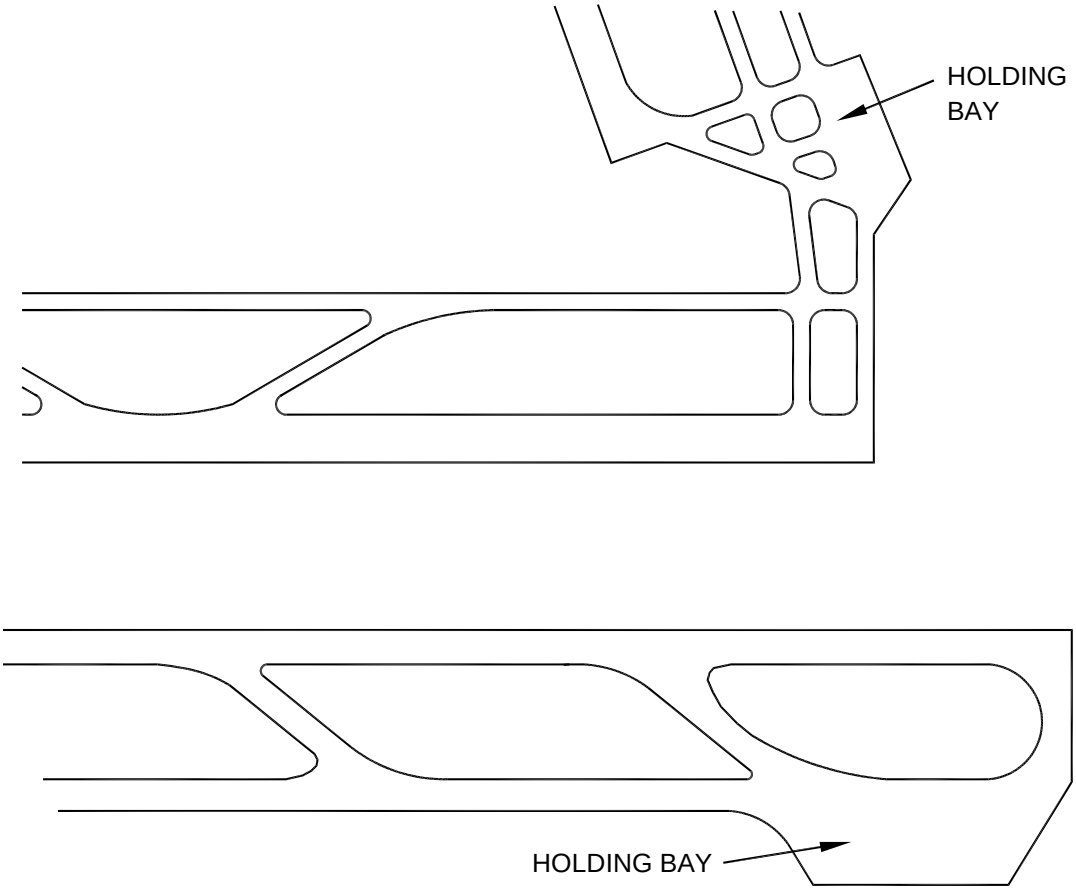

Figure 4-8. Typical holding bay configurations

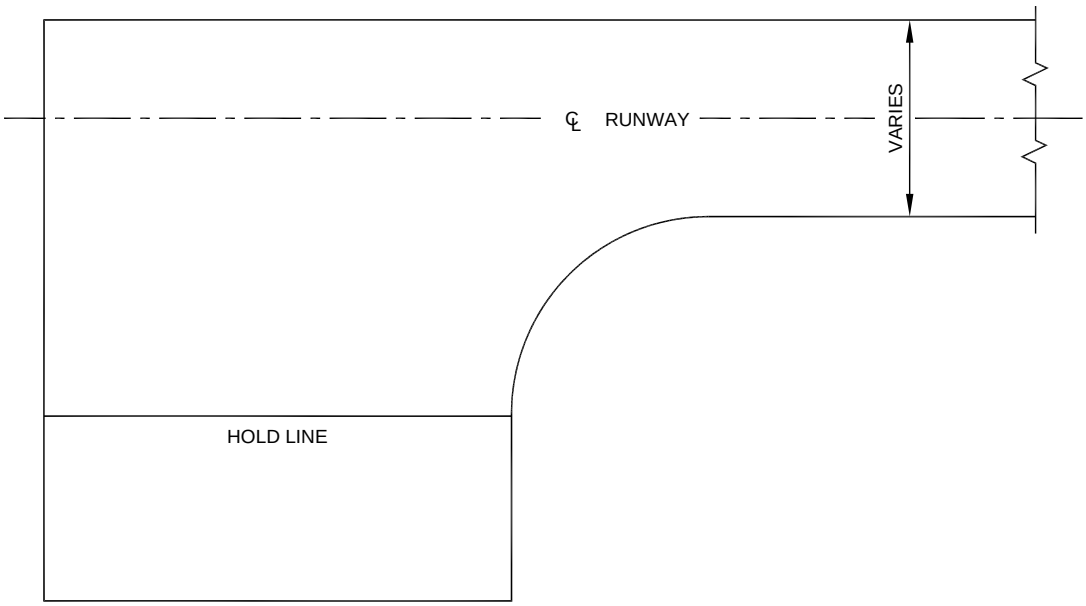

Figure 4-9. Taxiway turnaround

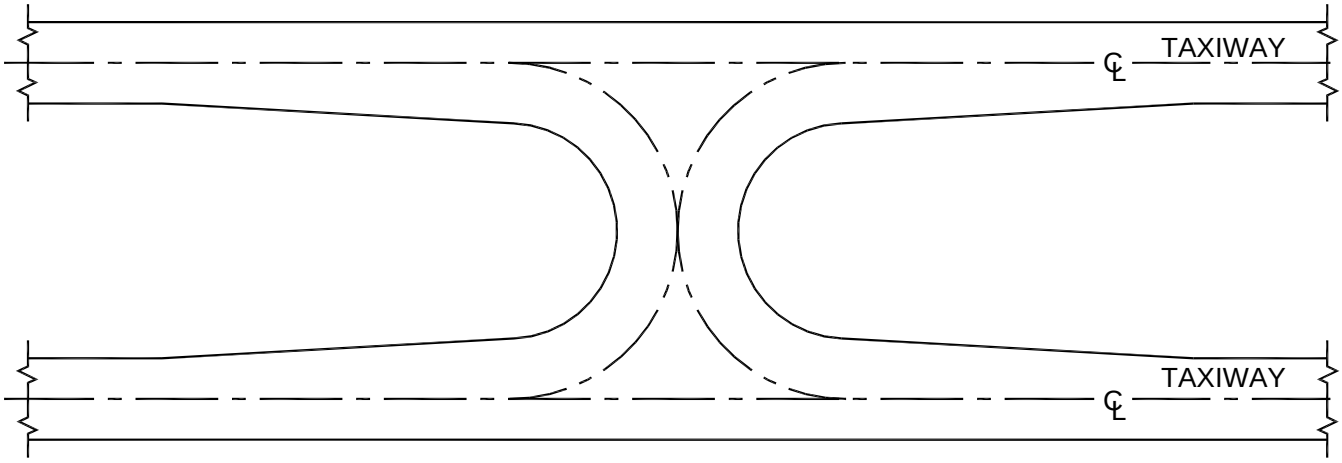

Figure 4-10. Crossover taxiway

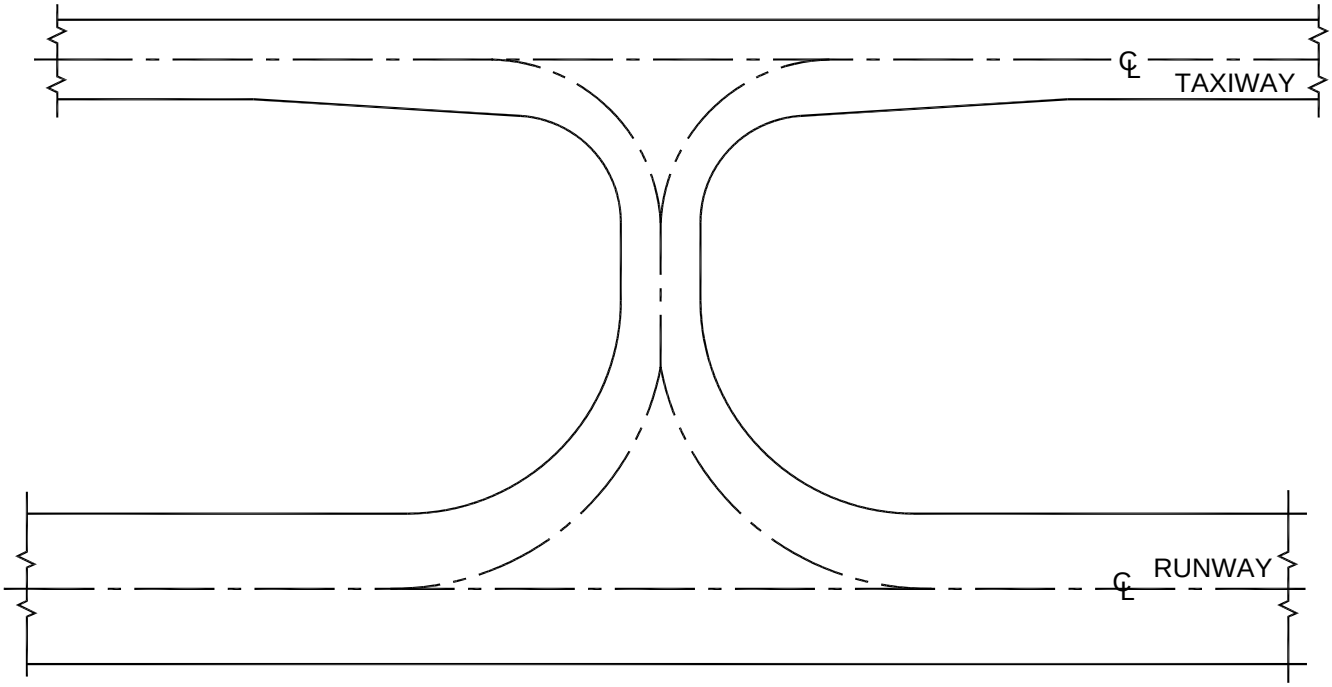

Figure 4-11. Right-angled exit taxiway

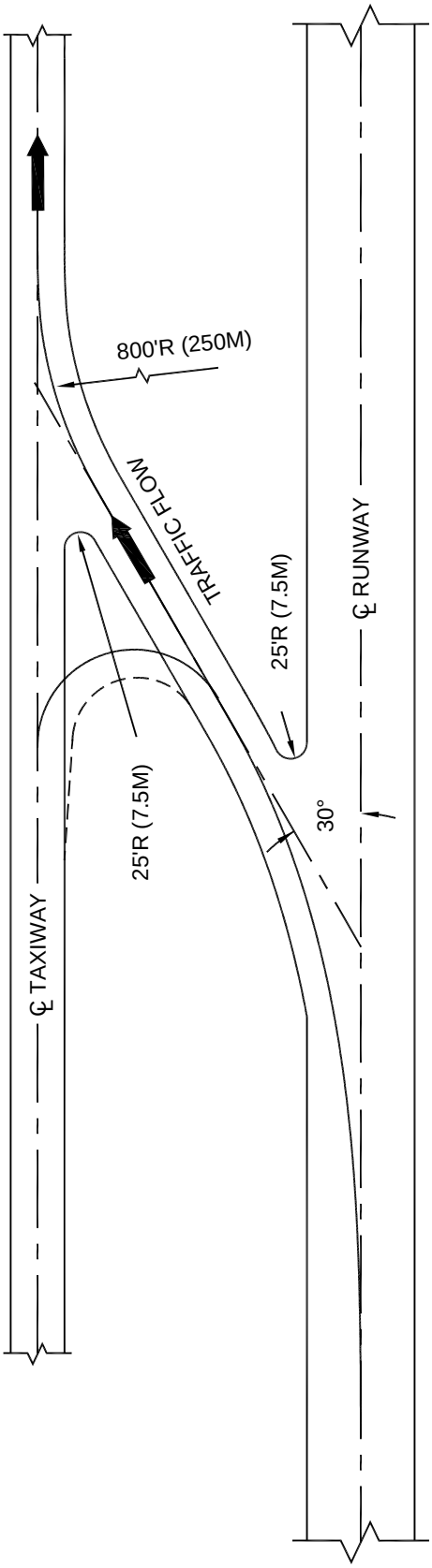

Figure 4-12. Acute-angled exit taxiway

OFFSET DISTANCES ON A RAPID RUNOFF EXIT TAXIWAY

Airplane wheelbase	84.000
Center of airplane cockpit to nosewheel	6.000
Airplane undercarriage width [1.15 x main gear track]	41.000
Taxiway edge safety margin	15.000
Taxiway width	75.000
Runway width	150.000
Runway centerline to parallel taxiway centerline	600.000

AIRPLANE COCKPIT ON CENTERLINE

Entrance Station	0.000		
Tangent Length	947.098		
Intersection Angle	30.00000	Spiral Length	1400.000
Tangent Length	479.205		
Exit Station	1400.000	Radius	1336.902
Entrance Station	1400.000		
Tangent Length	506.435		
Exit Station	1906.435		
Entrance Station	1906.435	Radius	800.000
Tangent Length	214.359		
Intersection Angle	-30.00000	Curve Length	418.879
Tangent Length	214.359		
Exit Station	2325.314	Radius	800.000
Entrance Station	2325.314		
Tangent Length	274.686		
Exit Station	2600.000		

STATION	LEFT OFFSET	RIGHT OFFSET	STEERING ANGLES	X COORDINATE	Y COORDINATE	CENTERLINE ANGLE
0.000	75.01	74.99	0.000	0.000	0.000	0.00000
50.000	75.06	74.94	0.032	50.000	0.011	0.03827
100.000	75.13	74.86	0.109	100.000	0.089	0.15306
150.000	75.20	74.76	0.212	149.999	0.301	0.34439
200.000	75.27	74.63	0.330	199.998	0.712	0.61224
250.000	75.33	74.49	0.456	249.993	1.391	0.95663
300.000	75.37	74.32	0.587	299.983	2.404	1.37755
350.000	75.38	74.12	0.721	349.963	3.818	1.87500
400.000	75.36	73.89	0.857	399.927	5.698	2.44898
450.000	75.31	73.62	0.994	449.868	8.113	3.09949
500.000	75.22	73.31	1.131	499.777	11.127	3.82653
550.000	75.09	72.96	1.268	549.641	14.808	4.63010
600.000	74.90	72.57	1.406	599.445	19.222	5.51020
650.000	74.67	72.11	1.543	649.172	24.432	6.46684
700.000	74.38	71.61	1.681	698.802	30.506	7.50000
750.000	74.02	71.04	1.819	748.308	37.506	8.60969
800.000	73.61	70.40	1.956	797.665	45.497	9.79592

Figure 4-13. Example of acute-angled exit taxiway computer layout data page 1

850.000	73.12	69.70	2.094	846.839	54.541	11.05867
900.000	72.56	68.92	2.232	895.795	64.699	12.39796
950.000	71.92	68.07	2.370	944.493	76.031	13.81378
1000.000	71.20	67.13	2.508	992.887	88.595	15.30612
1050.000	70.40	66.11	2.646	1040.928	102.447	16.87500
1100.000	69.51	65.00	2.784	1088.562	117.640	18.52041
1150.000	68.52	63.80	2.921	1135.729	134.227	20.24235
1200.000	67.45	62.51	3.059	1182.363	152.255	22.04082
1250.000	66.27	61.11	3.197	1228.396	171.768	23.91582
1300.000	64.99	59.62	3.335	1273.752	192.807	25.86735
1350.000	63.53	58.11	3.473	1318.349	215.408	27.89541
1400.000	61.32	57.15	3.611	1362.102	239.603	30.00000
1400.000	61.32	57.15	3.611	1362.102	239.603	30.00000
1450.000	58.78	56.38	2.072	1405.404	264.603	30.00000
1500.000	56.62	55.25	1.189	1448.705	289.603	30.00000
1550.000	54.68	53.89	0.682	1492.006	314.603	30.00000
1600.000	52.87	52.42	0.391	1535.307	339.603	30.00000
1650.000	51.13	50.87	0.225	1578.609	364.603	30.00000
1700.000	49.43	49.28	0.129	1621.910	389.603	30.00000
1750.000	47.75	47.66	0.074	1665.211	414.603	30.00000
1800.000	46.08	46.04	0.042	1708.512	439.603	30.00000
1850.000	44.35	44.48	0.024	1751.814	464.603	30.00000
1900.000	41.70	43.86	0.014	1795.115	489.603	30.00000
1906.435	41.24	43.91	0.013	1800.688	492.820	30.00000
1906.435	41.24	43.91	0.013	1800.688	492.820	30.00000
1950.000	38.43	43.96	-2.465	1838.991	513.565	26.87989
2000.000	36.05	43.54	-4.163	1884.266	534.763	23.29890
2050.000	34.28	42.90	-5.138	1930.776	553.092	19.71791
2100.000	32.94	42.21	-5.699	1978.341	568.480	16.13693
2150.000	31.94	41.58	-6.022	2026.774	580.867	12.55594
2200.000	31.21	41.08	-6.208	2075.886	590.205	8.97495
2250.000	30.75	40.72	-6.314	2125.485	596.457	5.39397
2300.000	31.03	40.03	-6.376	2175.378	599.599	1.81298
2325.314	31.82	39.22	-6.396	2200.688	600.000	0.00000
2325.314	31.82	39.22	-6.396	2200.688	600.000	0.00000
2350.000	32.70	38.32	-4.864	2225.374	600.000	0.00000
2400.000	33.89	37.12	-2.792	2275.374	600.000	0.00000
2450.000	34.58	36.43	-1.602	2325.374	600.000	0.00000
2500.000	34.97	36.03	-0.919	2375.374	600.000	0.00000
2550.000	0.00	0.00	-0.527	2425.374	600.000	0.00000
2600.000	0.00	0.00	-0.303	2475.374	600.000	0.00000

NOTE: The offset distance is a perpendicular distance measured from the taxiway centerline. The hard surface needs to be widened at stations where the offset distance extends beyond the hard surface.

REFERENCE: AC 150/5300-13, AIRPORT DESIGN.

Figure 4-14. Example of acute-angled exit taxiway computer layout data page 2

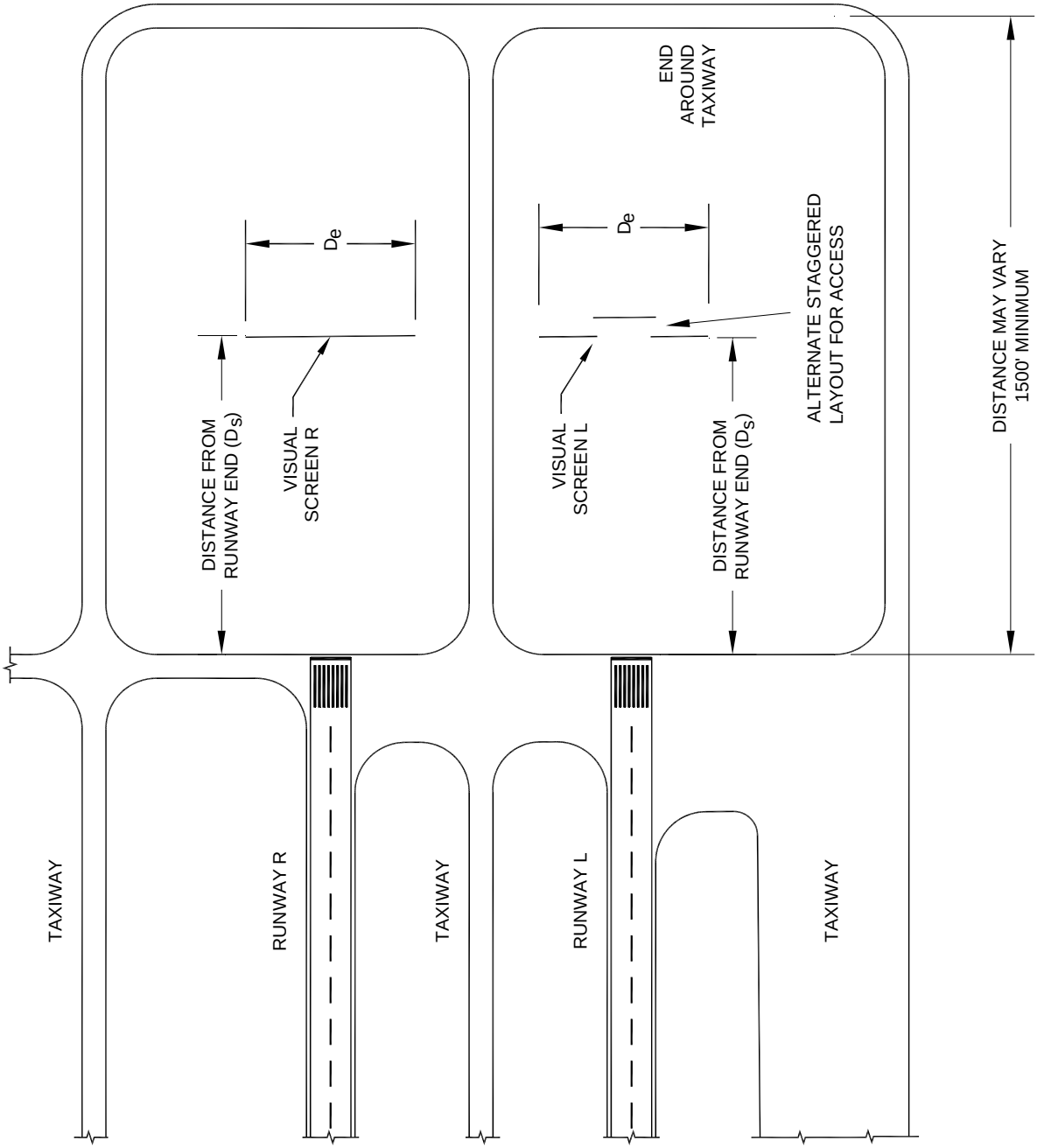

Figure 4-15. Typical end-around taxiway layout

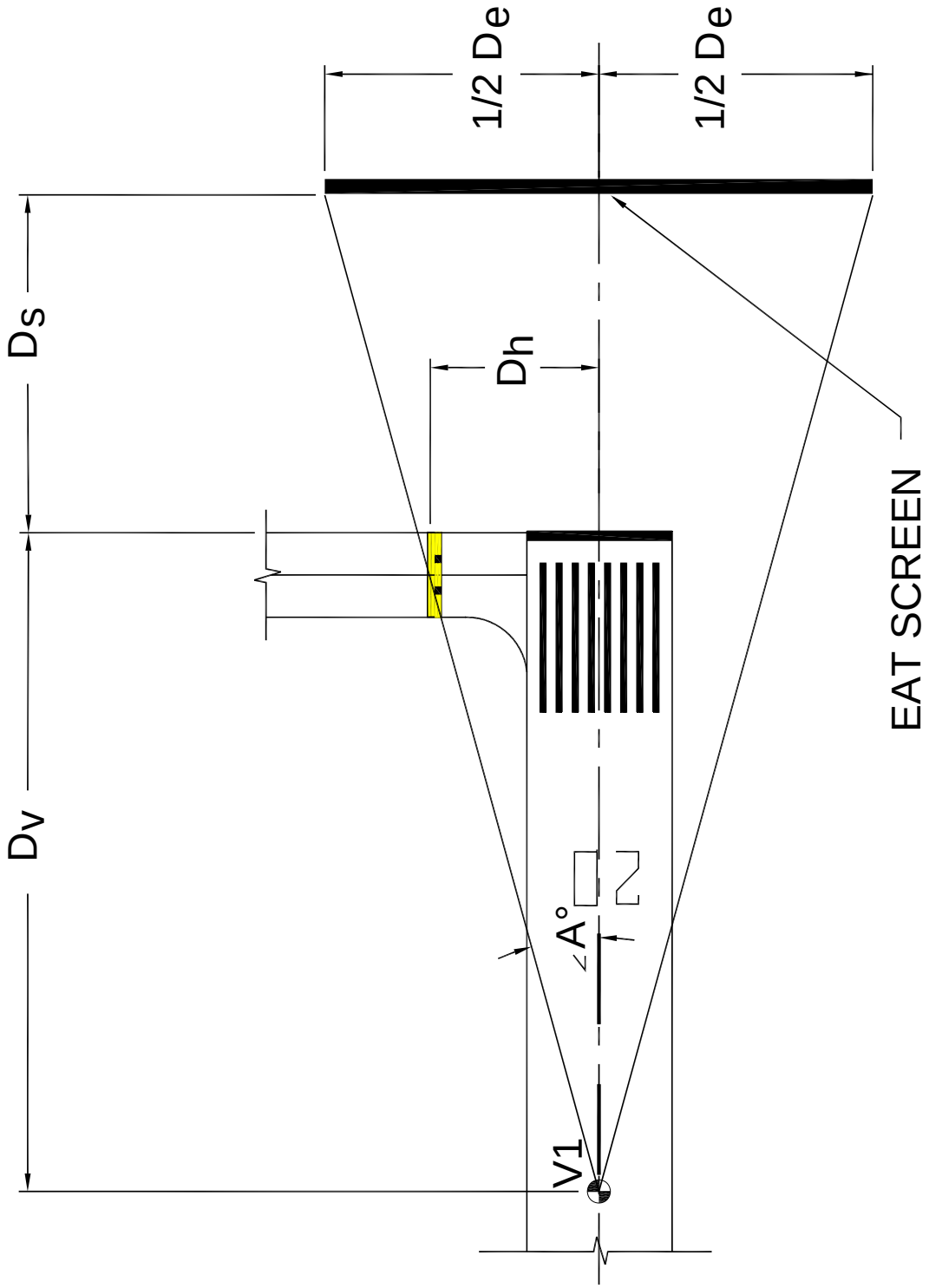

Figure 4-16. End-around taxiway visual screen width calculations

$$\angle A = \arctan \frac{D_h}{D_v}$$

$$\left(\tan \angle A(D_v + D_s)\right) = \frac{1}{2} D_e$$

Where: D_v = Distance from Average V1 location (defined in Federal Aviation Regulation 1.2 as takeoff decision speed) for Design Group aircraft to Departure Runway End.
D_s = Distance from Departure Runway End to the EAT Visual Screen Location
D_h = Distance from the Departure Runway End Centerline to the Centerline of Taxiway at Hold Position Marking
D_e = Total Width of EAT Visual Screen

Figure 4-17. Visual screen width calculation formula

Table 4-4. Visual screen height calculation formula (same elevation as runway)

EAT Visual Screen Height Calculation – EAT and Runway at Same Elevation

Design Group	Typical Design Group Engine Nacelle Height	Required Screen Surface Height	Required Height of Top Edge of Screen (Above Runway Centerline Elevation)
III	9 ft	10 ft	10 ft
IV	12 ft	13 ft	13 ft
V	18 ft	16 ft	18 ft
VI	18 ft	16 ft	18 ft

Table 4-5. Visual screen height calculation formula (EAT below DER elevation) for Design Group III

Design Group III Aircraft
EAT Visual Screen Height Calculation –
EAT At or Below DER Elevation

Elevation Difference (ft)	Required Screen Surface Height (ft)	Required Height of Top Edge of Screen (+ DER Centerline Elevation) (ft)
0	10	10
1	10	10
2	10	10
3	10	10
4	10	10
5	10	10
6	10	10
7	10	10
8	10	10
9	10	10
10	10	10
11	9	9
12	9	9
13	9	9
14	9	9
15	9	9
16	9	9
17	9	9
18	9	9
19	9	9
20	8	8
21	8	8
22	8	8
23	8	8
24	8	8
25	8	8
26	8	8
27	8	8
28	8	8
29+	0	0

Table 4-6. Visual screen height calculation formula (EAT below DER elevation) for Design Group IV

Design Group IV Aircraft
EAT Visual Screen Height Calculation –
EAT At or Below DER Elevation

Elevation Difference (ft)	Required Screen Surface Height (ft)	Required Height of Top Edge of Screen (+/- DER Centerline Elevation) (ft)
0	13	13
1	13	13
2	13	13
3	13	13
4	13	13
5	13	13
6	13	13
7	13	13
8	13	13
9	13	13
10	13	13
11	13	13
12	13	13
13	13	13
14	12	12
15	12	12
16	12	12
17	11	11
18	11	11
19	11	11
20	10	10
21	10	10
22	10	10
23	9	9
24	9	9
25	9	9
26	8	8
27	8	8
28	8	8
29+	0	0

Table 4-7. Visual screen height calculation formula (EAT below DER elevation) for Design Groups V and VI

Design Group V and VI Aircraft
EAT Visual Screen Height Calculation –
EAT At or Below DER Elevation

Elevation Difference (ft)	Required Screen Surface Height (ft)	Required Height of Top Edge of Screen (+/- DER Centerline Elevation) (ft)
0	13	18
1	13	18
2	13	18
3	13	18
4	13	18
5	13	17
6	13	16
7	13	15
8	13	14
9	13	13
10	13	13
11	13	13
12	13	13
13	13	13
14	12	12
15	12	12
16	12	12
17	11	11
18	11	11
19	11	11
20	10	10
21	10	10
22	10	10
23	9	9
24	9	9
25	9	9
26	8	8
27	8	8
28	8	8
29+	0	0

Table 4-8. Visual screen vertical height calculation tables

Design Group III -VI Aircraft EAT Visual Screen Height Calculation – EAT Above DER Elevation

Design Group	Required Height of Top Edge of Screen (Above Runway Centerline Elevation) (ft)	Add Elevation Difference – EAT above DER	Calculate: NEW Required Height of Top Edge of Screen (Above DER Centerline Elevation) (ft)
III	10	+ Elevation Difference	= New Required Height of Top Edge of Screen
IV	13		
V	18		
VI	18		

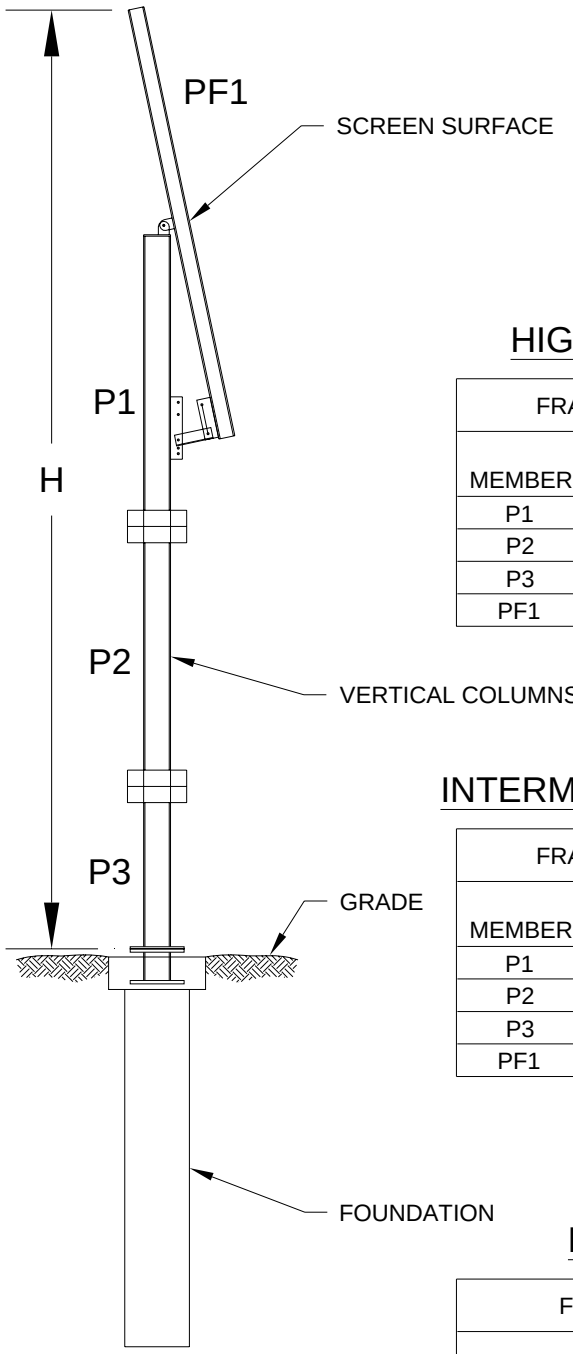

HIGH FRAME ELEV: 26'< H ≤ 32'

FRAMING SCHEDULE - VISUAL SCREEN 26'< H ≤ 32'			
	WIND SPEED (MPH)		
MEMBER	90	130	150
P1	HSS 8x6x5/16	HSS 8x8x1/2	HSS 12x8x3/8
P2	HSS 10x6x1/2	HSS 12x8x9/16	HSS 16x8x1/2
P3	HSS 12x6x1/2	HSS 16x8x1/2	HSS 20x8x1/2
PF1	HSS 6x4x3/16	HSS 6x4x5/16	HSS 6x4x5/16

INTERMEDIATE FRAME ELEV: 18'< H ≤ 26'

FRAMING SCHEDULE - VISUAL SCREEN 18'< H ≤ 26'			
	WIND SPEED (MPH)		
MEMBER	90	130	150
P1	HSS 8x6x5/16	HSS 8x8x1/2	HSS 12x8x3/8
P2	HSS 10x6x1/2	HSS 12x8x9/16	HSS 16x8x1/2
P3			
PF1	HSS 6x4x3/16	HSS 6x4x5/16	HSS 6x4x5/16

LOW FRAME ELEV: H ≤ 18'

FRAMING SCHEDULE - VISUAL SCREEN H ≤ 18'			
	WIND SPEED (MPH)		
MEMBER	90	130	150
P1	HSS 8x6x5/16	HSS 8x8x1/2	HSS 12x8x3/8
P2			
P3			
PF1	HSS 6x4x3/16	HSS 6x4x5/16	HSS 6x4x5/16

Figure 4-18. Examples of mounting screen to vertical column

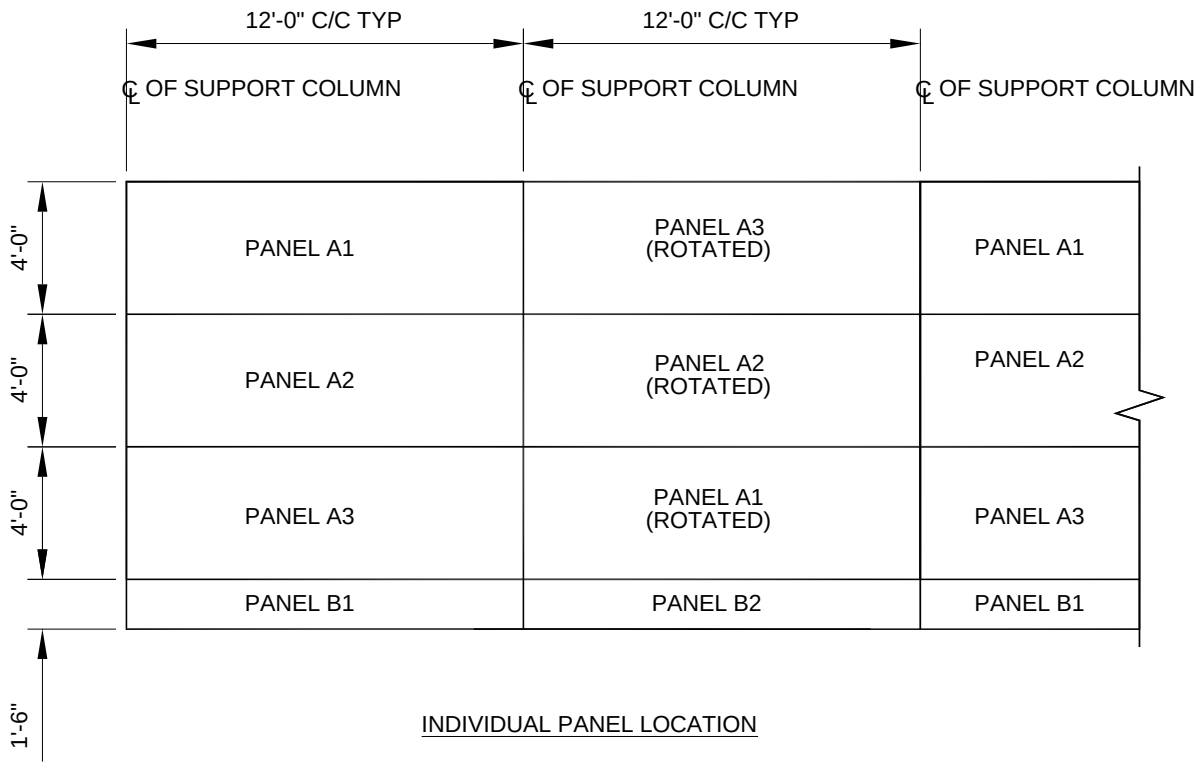

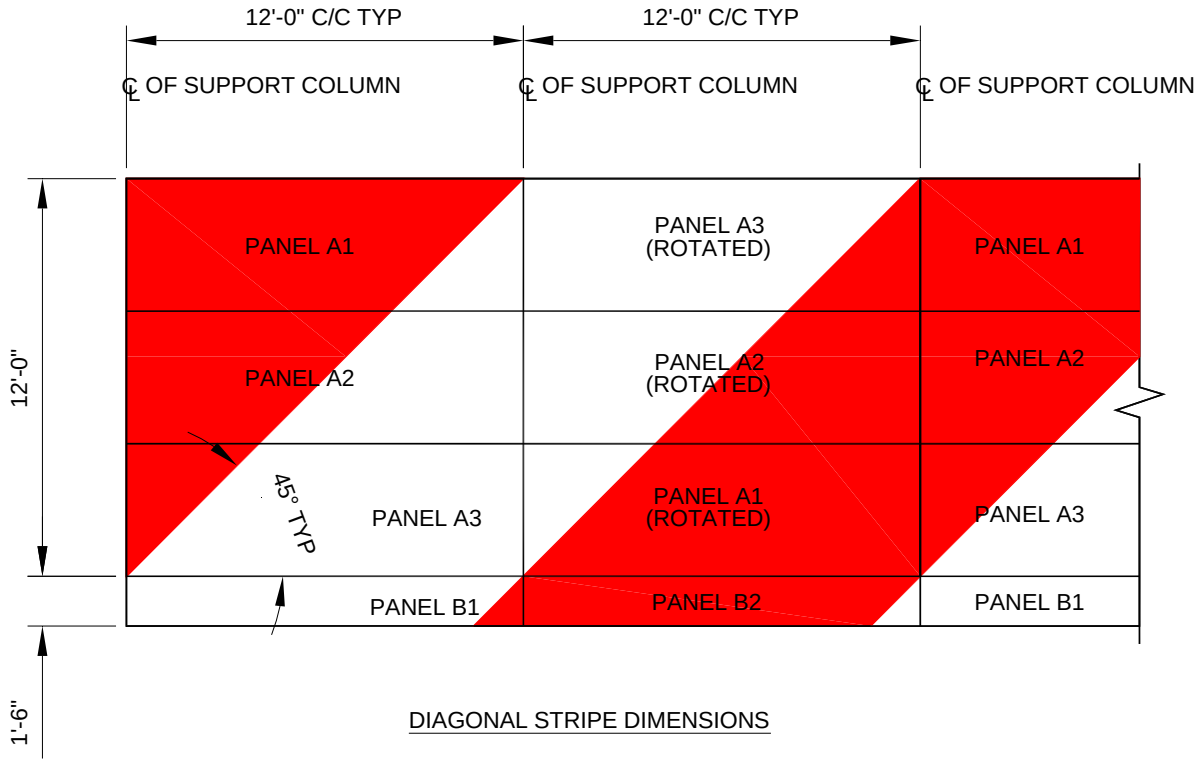

Figure 4-19. Examples of panel layout for 13-foot-high screen

Table 4-9. Visual screen panel wind-loading deflection allowance

WIND SPEED (3 SEC GUST)	DEFLECTION	STRENGTH
90 MPH	.074 PSI	.17 PSI
130 MPH	.074 PSI	.35 PSI
150 MPH	.074 PSI	.47 PSI

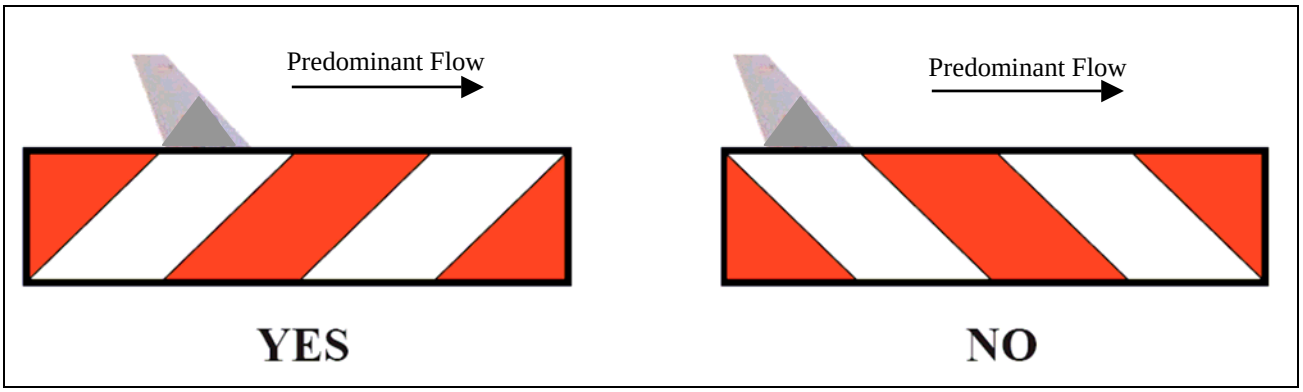

Figure 4-20. Diagonal stripe orientation

Table 4-10. CIE chromaticity coordinate limits

Color	**x**	**y**	**X**	**Y**	**x**	**y**	**x**	**y**	**Min**	**Max**	**Munsell Paper**
White	.303	.287	.368	.353	.340	.380	.274	.316	35.0		6.3GY 6.77/0.8
Red	.613	.297	.708	.292	.636	.364	.558	.352	8.0	12.0	8.2R 3.78/14.0

Table 4-11. Minimum reflection levels

Minimum Coefficient of Retroreflection Candelas/Foot Candle/Square Foot/Candelas/Lux/Square Meter

Observation Angle 1/ (degrees)	Entrance Angle 2/ (degrees)	White	Red
0.2	-4	70	14.5
0.2	+30	30	6.0
0.5	-4	30	7.5
0.5	+30	15	3.0

(Reflectivity must conform to Federal Specification FP-85 Table 718-1 and ASTM D 4956.)

1/ Observation (Divergence) Angle–The angle between the illumination axis and the observation axis.

2/ Entrance (Incidence) Angle–The angle from the illumination axis to the retroreflector axis. The retroreflector axis is an axis perpendicular to the retroreflective surface.

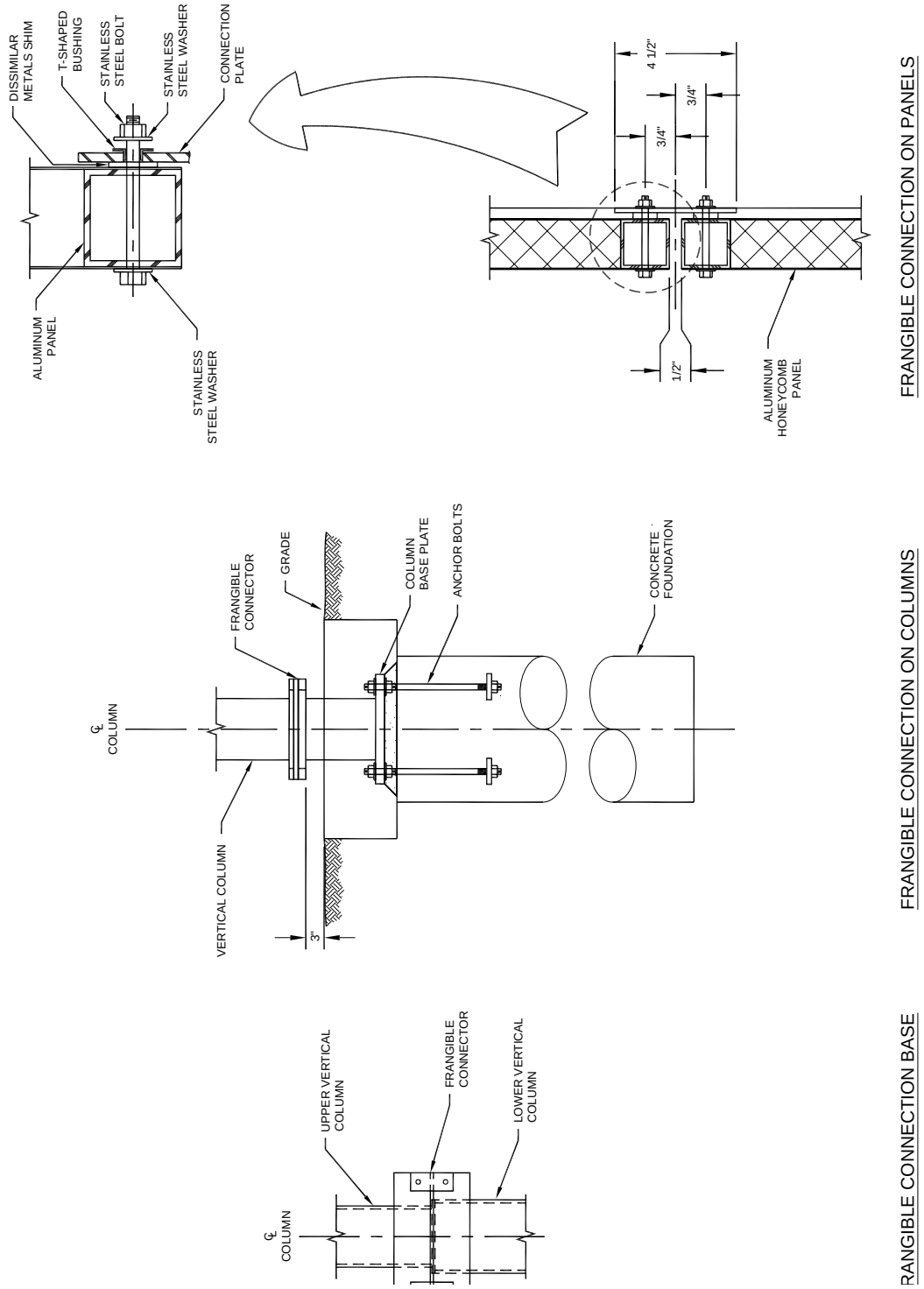

Figure 4-21. Examples of frangibility connections

```
E51: 'AREA NOT INCLUDED
A52: +A2
COPY CELL A52 TO RANGE(A52..A54)
D52: +D2
COPY CELL D52 TO RANGE(D53..E54)
A57: +A7
E57: +E7
B58: (A9+B8)/2
COPY CELL B58 TO RANGE(B58..J58)
B59: (B9+C8)/2
COPY CELL B59 TO RANGE(B59..J59)
A61: +A11
COPY CELL A61 TO RANGE(A61..A96)
B61: @IF($K61<=B$58,1,@IF($L61>B$59,$A$9,(B$59^2-$K61*$L61+
     @IF($K61<B$59,0,$L61*($K61-B$59)^2/($K61-$L61))-
     @IF($L61>B$58,0,$K61*(B$58-$L61)^2/($K61-$L61)))/(B$59^2-B$58^2)))
COPY CELL B61 TO RANGE(B61..J96)
K61: @MAX($D$4/(@MAX(@ABS(@SIN(($D$3-A61*10+5)*@PI/180)),1.0000000E-50)),
     $D$4/(@MAX(@ABS(@SIN(($D$3-A61*10-5)*@PI/180)),1.0000000E-50)))
COPY CELL K61 TO RANGE(K61..K96)
L61: @MIN($D$4/(@MAX(@ABS(@SIN(($D$3-A61*10+5)*@PI/180)),1.0000000E-50)),
     $D$4/(@MAX(@ABS(@SIN(($D$3-A61*10-5)*@PI/180)),1.0000000E-50)))
COPY CELL L61 TO RANGE(L61..L96)
A100: |::
E101: '% WIND NOT COVERED
A102: +A2
COPY CELL A102 TO RANGE(A102..A104)
D102: +D2
COPY CELL D102 TO RANGE(D103..E104)
A107: +A7
E107: +E7
L107: 'TOTAL:
B108: +B58
COPY CELL B108 TO RANGE(B108..J109)
A111: +A61
COPY CELL A111 TO RANGE(A111..A146)
B111: @IF(B61=0,$A$9,100*(B61*B11)/$K$48)
COPY CELL B111 TO RANGE(B111..J146)
L111: @SUM(B111..J111)
COPY CELL L111 TO RANGE(L111..L146)
A148: 'TOTAL:
B148: @SUM(B111..B146)
COPY CELL B148 TO RANGE(B148..J148)
L148: @SUM(L111..L146)
A150: |::
```

Figure A1-11. Lotus cell-formulas page 2

Appendix 2. RUNWAY END SITING REQUIREMENTS

1. PURPOSE. This appendix contains guidance on siting thresholds to meet approach obstacle clearance requirements and departure obstacle clearance requirements.

2. APPLICATION.

a. The threshold should be located at the beginning of the full-strength runway pavement or runway surface. However, displacement of the threshold may be required when an object that obstructs the airspace required for landing and/or departing airplanes is beyond the airport owner's power to remove, relocate, or lower. Thresholds may also be displaced for environmental considerations, such as noise abatement, or to provide the standard RSA and ROFA lengths.

b. When a hazard to air navigation exists, the amount of displacement of the threshold or reduction of the TODA should be based on the operational requirements of the most demanding airplanes. The standards in this appendix minimize the loss of operational use of the established runway and reflect the FAA policy of maximum utilization and retention of existing paved areas on airports.

c. Displacement of a threshold reduces the length of runway available for landings. Depending on the reason for displacement of the threshold, the portion of the runway behind a displaced threshold may be available for takeoffs in either direction and landings from the opposite direction. Refer to Appendix 14, Declared Distances, for additional information.

d. Where specifically noted, the Glidepath Angle (GPA) and Threshold Crossing Height (TCH) of a vertically guided approach may be altered (usually increased) rather than displacing the threshold. Examples of approaches with positive vertical guidance include Instrument Landing System (ILS), Microwave Landing System (MLS), Localizer Performance with Vertical Guidance (LPV), Lateral Navigation/Vertical Navigation (LNAV/VNAV), and required navigation performance (RNP). Alternatively, a combination of threshold displacement and altering of the Glidepath Angle/ Threshold Crossing Height (GPA/TCH) may also be accomplished. Guidelines for maximum and minimum values of TCH and GPA are contained in FAA Order 8260.3, *United States Standard for Terminal Instrument Procedures (TERPS).* The tradeoff between threshold displacement, TCH, and GPA is complex, but can be analyzed by applying formula contained in the order. Contact the appropriate FAA Airports Regional or District Office for assistance on the specific requirements and effects of GPA and TCH changes.

3. LIMITATIONS.

a. These standards should not be interpreted as an FAA blanket endorsement of the alternative to displace or relocate a runway threshold. Threshold displacement or relocation should be undertaken only after a full evaluation reveals that displacement or relocation is the only practical alternative.

b. The standards in this appendix are not applicable for identifying objects affecting navigable airspace. See Title 14 Code of Federal Regulations Part 77, Objects Affecting Navigable Airspace.

4. EVALUATION CONSIDERATIONS.

a. Possible Actions. When a penetration to a threshold siting surface defined in paragraph 5 exists, one or more of the following actions are required:

(1) Approach Surfaces.

(a) The object is removed or lowered to preclude penetration of applicable threshold siting surfaces;

(b) The threshold is displaced to preclude object penetration of applicable threshold siting surfaces, with a resulting shorter landing distance; or

(c) The GPA and/or TCH is/are modified, or a combination of threshold displacement and GPA/TCH increase is accomplished.

(d) Visibility minimums are raised.

(e) Night operations are prohibited unless the obstruction is lighted or an approved Visual Glide Slope Indicator (VGSI) is used.

(2) Departure Surfaces for Designated Runways. The applicability of the surface defined in Table A2-1 is dependant on the designation of primary runway(s) for departure. The Airport Sponsor, through the Airports District Office to the Regional Airspace Procedures Team (RAPT), will identify runway end(s) intended primarily for instrument departures. The determination of primary runway(s) for departure does not prohibit or negate the use of other runways. It only identifies the applicability of the surface in Table A2-1 to the runway end(s).

(a) Remove, relocate, or lower (or both relocate and lower) the object to preclude penetration of applicable siting surfaces unless it is fixed by function

and/or designated impracticable. Within 6000' of the Table A2-1 surface origin, objects less than or equal to an elevation determined by application of the formula below are allowable.

$$E + (0.025 \times D)$$

Where:
E = DER elevation
D = Distance from OCS origin to object in feet

(b) Decrease the Takeoff Distance Available (TODA) to preclude object penetration of applicable siting surfaces, with a resulting shorter takeoff distance (the Departure End of the Runway (DER) is coincident with the end of the TODA where a clearway is not in effect); or

(c) Modify instrument departures. Contact the Flight Procedures Office (FPO) for guidance. Objects penetrating by ≤ 35 feet may not require actions (a) or (b); however, they will impact departure minimums/climb gradients or departure procedures.

b. Relevant Factors for Evaluation.

(1) Types of airplanes that will use the runway and their performance characteristics.

(2) Operational disadvantages associated with accepting higher landing/ takeoff minimums.

(3) Cost of removing, relocating, or lowering the object.

(4) Effect of the reduced available landing/takeoff length when the runway is wet or icy.

(5) Cost of extending the runway if insufficient runway length would remain as a result of displacing the threshold. The environmental aspects of a runway extension need to also be evaluated under this consideration.

(6) Cost and feasibility of relocating visual and electronic approach aids, such as threshold lights, visual glide slope indicator, runway end identification lights, localizer, glide slope (to provide a threshold crossing height of not more than 60 feet (18 m)), approach lighting system, and runway markings.

(7) Effect of the threshold change on noise abatement.

5. CLEARANCE REQUIREMENTS. The standard shape, dimensions, and slope of the surface used for locating a threshold are dependent upon the type of aircraft operations currently conducted or forecasted, the landing visibility minimums desired, and the types of instrumentation available or planned for that runway end.

a. Approaches with Positive Vertical Guidance. Table A2-1 and Figure A2-1 describe the clearance surfaces required for instrument approach procedures with vertical guidance.

The Glidepath Qualification Surface (GQS) limits the height of obstructions between Decision Altitude (DA) and runway threshold (RWT). When obstructions exceed the height of the GQS, an approach procedure with positive vertical guidance is not authorized. Further information can be found in the appropriate TERPS criterion.

b. Instrument Approach Procedures Aligned with the Runway Centerline. Table A2-1 and Figure A2-1 describe the minimum clearance surfaces required for instrument approach procedures aligned with the runway centerline.

c. Procedures Not Aligned with the Runway Centerline. To accommodate for offset procedures, increase the lateral width at threshold by multiplying the width specified in the appropriate paragraph by 2 (offset side only). The outside offset boundary splays from this point at an angle equal to the amount of angular divergence between the final approach course and runway centerline + 10 degrees. Extend the outside offset boundary out to the distance specified in the applicable paragraph and connect it to runway centerline with an arc of the same radius. On the side opposite the offset, construct the area aligned with runway centerline as indicated (non-offset side only). The surface slope is as specified in the applicable paragraph, according to Table A2-1. Figure A2-2 is an example of the offset procedure.

d. Locating or Determining the DER. The standard shape, dimensions, and slope of the departure surface used for determining the DER, as defined in TERPS, is only dependent upon whether or not instrument departures are being used or planned for that runway end. See Table A2-1 and Figures A2-1 and A2-2 for dimensions.

Subparagraph 5d(2) applies only to runways supporting Air Carrier departures and is not to be considered a clearance surface.

(1) For Departure Ends at Designated Runways.

(a) No object should penetrate a surface beginning at the elevation of the runway at the DER or end of clearway, and slopes at 40:1. Penetrations by existing obstacles of 35 feet or less would not require TODA

reduction or other mitigations found in paragraph 4; however, they may affect new or existing departure procedures.

(2) Departure Runway Ends Supporting Air Carrier Operations.

(a) Objects should be identified that penetrate a one-engine inoperative (OEI) obstacle identification surface (OIS) starting at the DER and at the elevation of the runway at that point, and slopes upward at 62.5:1. See Figure A2-4.

Note: This surface is provided for information only and does not take effect until January 1, 2008.

Table A2-1. Approach/Departure Requirements Table

	Runway Type	DIMENSIONAL STANDARDS* Feet					Slope/ OCS
		A	B	C	D	E	
1	Approach end of runways expected to serve small airplanes with approach speeds less than 50 knots. (Visual runways only, day/night)	0	60	150	500	2,500	15:1
2	Approach end of runways expected to serve small airplanes with approach speeds of 50 knots or more. (Visual runways only, day/night)	0	125	350	2,250	2,750	20:1
3	Approach end of runways expected to serve large airplanes (Visual day/night); or instrument minimums ≥ 1 statute mile (day only).	0	200	500	1,500	8,500	20:1
4	Approach end of runways expected to support instrument night circling. [1]	200	200	1,700	10,000	0	20:1
5	Approach end of runways expected to support instrument straight in night operations, serving approach category A and B aircraft only. [1]	200	200	1,900	10,000 [2]	0	20:1
6	Approach end of runways expected to support instrument straight in night operations serving greater than approach category B aircraft. [1]	200	400	1,900	10,000 [2]	0	20:1
7 [3, 6, 7, 8]	Approach end of runways expected to accommodate approaches with positive vertical guidance (GQS).	0	½ width runway + 100	760	10,000 [2]	0	30:1
8	Approach end of runways expected to accommodate instrument approaches having visibility minimums ≥ 3/4 but < 1 statute mile, day or night.	200	400	1,900	10,000 [2]	0	20:1
9	Approach end of runways expected to accommodate instrument approaches having visibility minimums < 3/4 statute mile or precision approach (ILS, GLS, or MLS), day or night.	200	400	1,900	10,000 [2]	0	34:1
10	Approach runway ends having Category II approach minimums or greater.	The criteria are set forth in TERPS, Order 8260.3.					
11	Departure runway ends for all instrument operations.	0 [4]	See Figure A2-3				40:1
12	Departure runway ends supporting Air Carrier operations. [5]	0 [4]	See Figure A2-4				62.5:1

* The letters are keyed to those shown in Figure A2-1.

Notes:

1. Lighting of obstacle penetrations to this surface or the use of a VGSI, as defined by the TERPS order, may avoid displacing the threshold.
2. 10,000 feet is a nominal value for planning purposes. The actual length of these areas is dependent upon the visual descent point position for 20:1 and 34:1 and Decision Altitude point for the 30:1.
3. Any penetration to this surface will limit the runway end to nonprecision approaches. No vertical approaches will be authorized until the penetration(s) is/are removed except obstacles fixed by function and/or allowable grading.
4. Dimension A is measured relative to Departure End of Runway (DER) or TODA (to include clearway).
5. Data Collected regarding penetrations to this surface are provided for information and use by the air carriers operating from the airport. These requirements do not take effect until January 1, 2008.
6. Surface dimensions/Obstacle Clearance Surface (OCS) slope represent a nominal approach with 3 degree GPA, 50’

TCH, < 500' HAT. For specific cases refer to TERPS. The Obstacle Clearance Surface slope (30:1) represents a nominal approach of 3 degrees (also known as the Glide Path Angle). This assumes a threshold crossing height of 50 feet. Three degrees is commonly used for ILS systems and VGSI aiming angles. This approximates a 30:1 approach angle that is between the 34:1 and the 20:1 notice surfaces of Part 77. Surfaces cleared to 34:1 should accommodate a 30:1 approach without any obstacle clearance problems.

7. For runways with vertically guided approaches the criteria in Row 7 is in addition to the basic criteria established within the table, to ensure the protection of the Glidepath Qualification Surface.
8. For planning purposes, sponsors and consultants determine a tentative Decision Altitude based on a 3° Glidepath angle and a 50-foot Threshold Crossing Height.

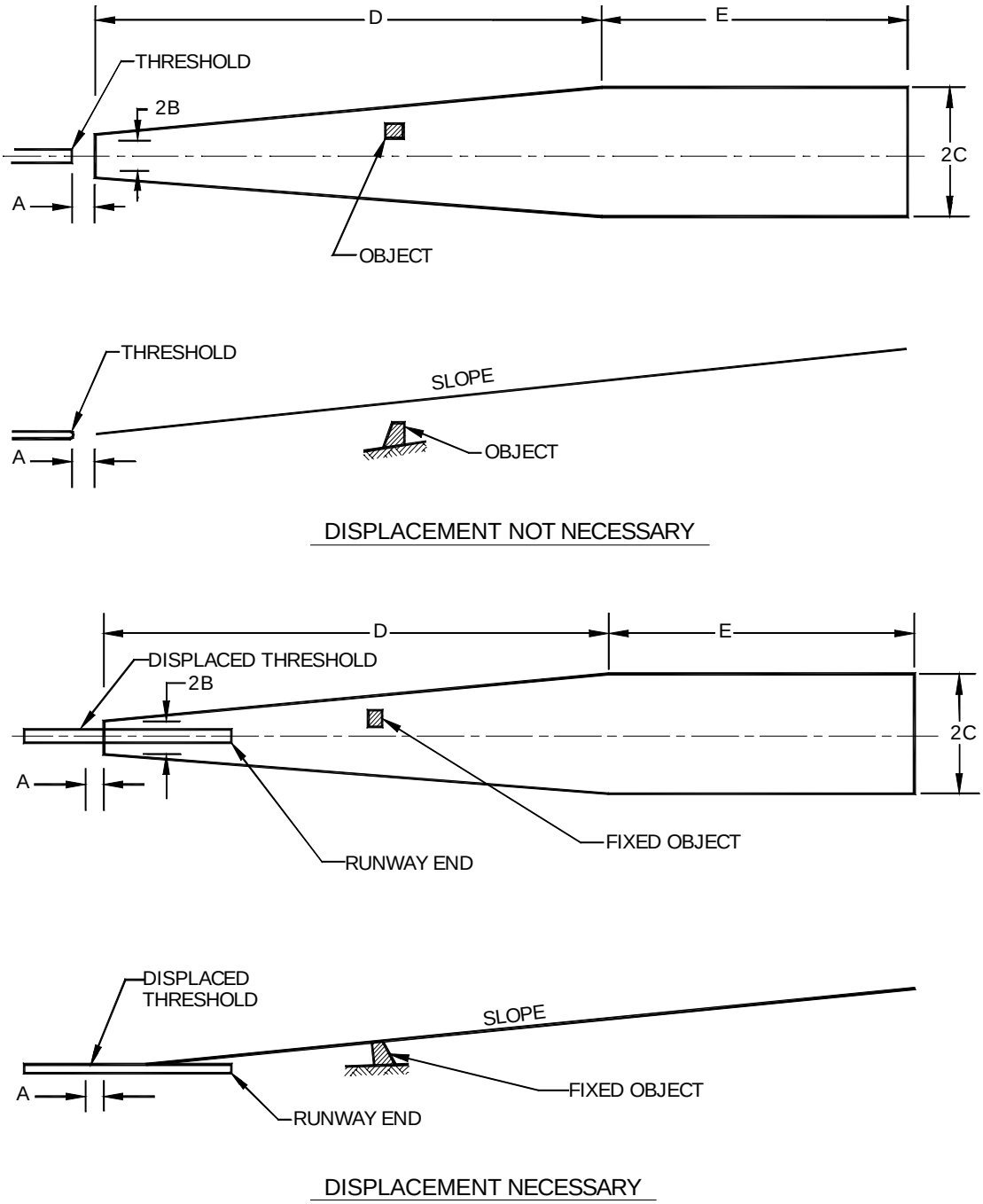

Figure A2-1. Approach slopes

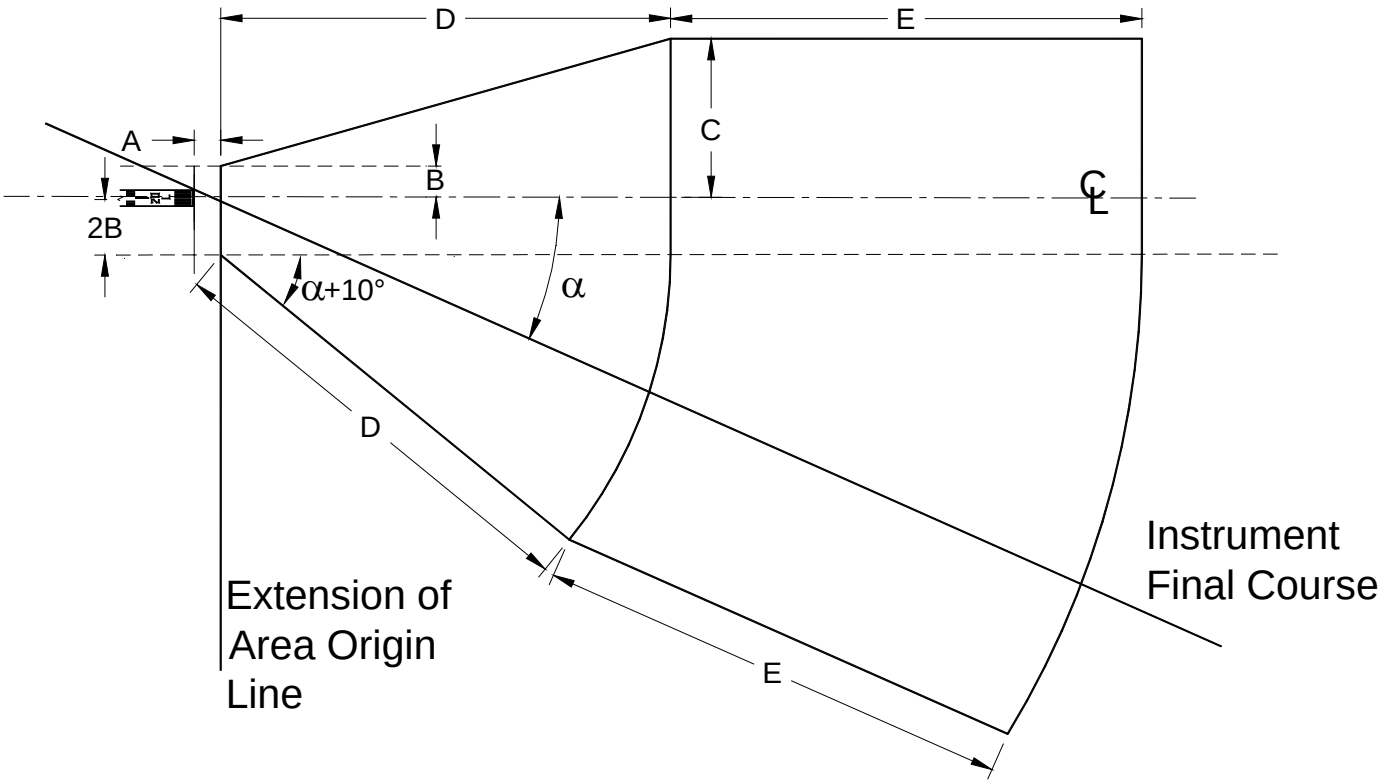

Figure A2-2. Approach Slopes—With Offset Approach Course

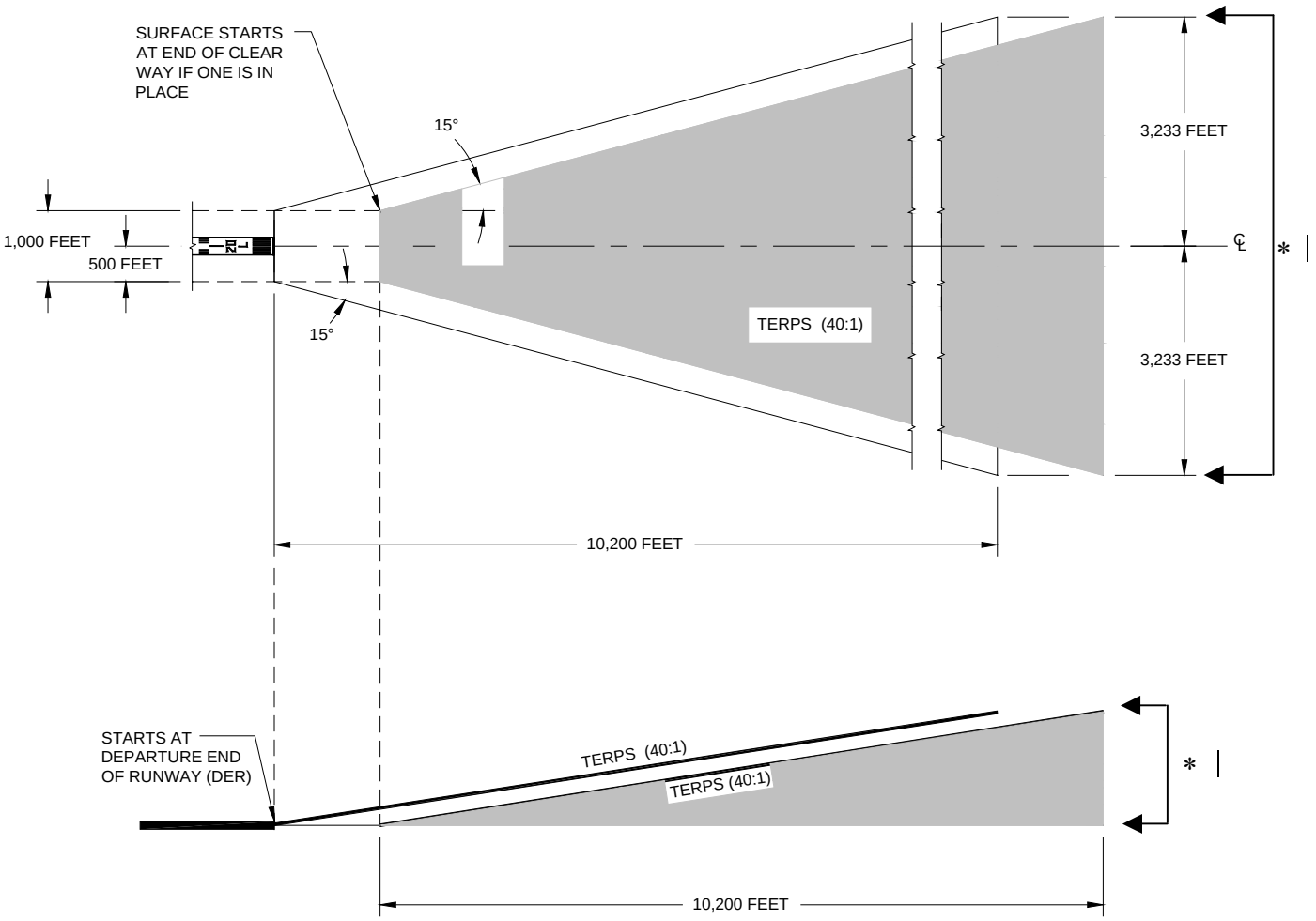

Figure A2-3. Departure surface for Instrument Runways TERPS (40:1)

* This is an interpretation of the application of the TERPS surface associated with a clearway.

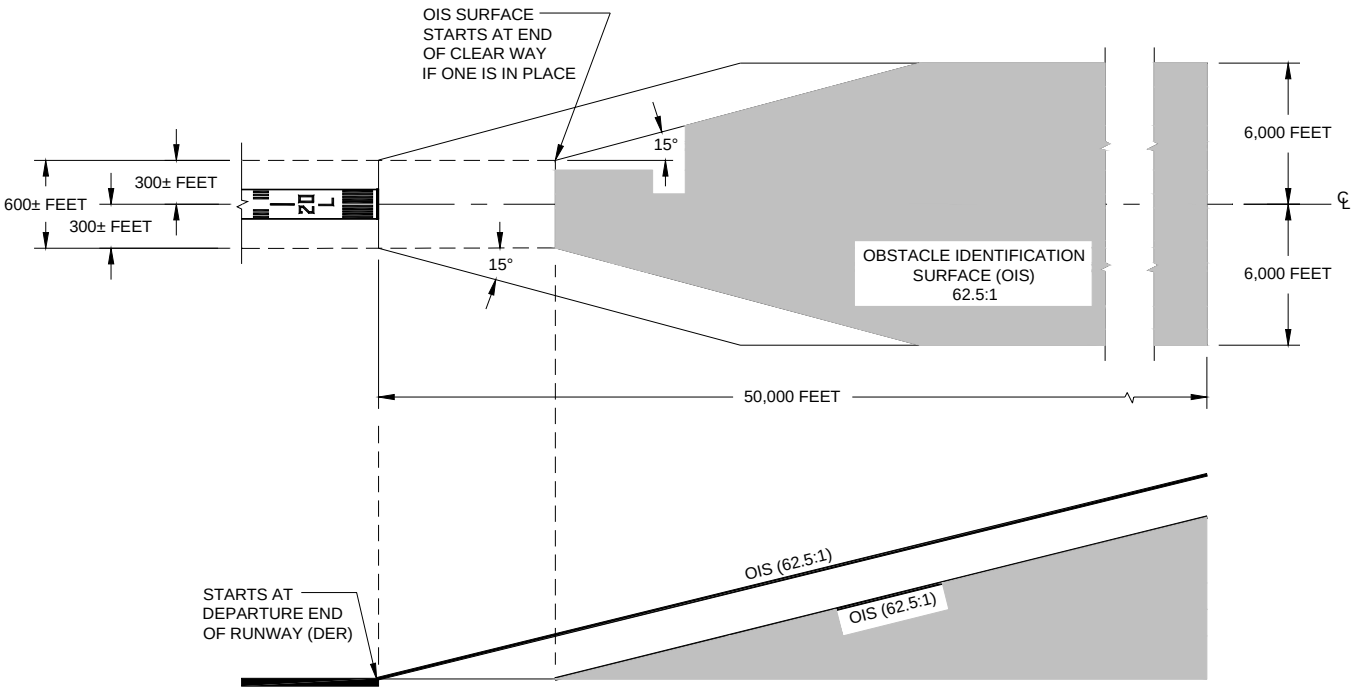

Figure A2-4. One-Engine Inoperative (OEI) Obstacle Identification Surface (62.5:1)

Appendix 3. AIRPORT REFERENCE POINT

1. DISCUSSION.

a. The airport reference point (ARP) geographically locates the airport horizontally. The ARP is normally not monumented or physically marked on the ground. The computation of this point uses only runway length.

b. Meaningful airport reference point computations use the ultimate runway lengths proposed for development. These computations do not use closed or abandoned areas. The FAA approved airport layout plan shows the ultimate development. If there is no airport layout plan, the ultimate runway lengths are the existing runways plus those that have airspace approval, less closed or abandoned areas.

c. The ARP is computed or recomputed as infrequently as possible. The only time that a recomputation is needed is when the proposed ultimate development is changed.

2. SAMPLE COMPUTATION. The following procedure determines the location of the airport reference point used in FAR Part 77 studies.

a. Establish two base lines perpendicular to each other as shown in Figure A3-1. Let the northerly base line be known as B and the westerly as A.

b. Establish the midpoint of each runway.

c. Determine the perpendicular distance from the base lines to the midpoints.

d. Calculate the moment of areas for each base line as shown in Figure A3-2.

e. Divide each moment of area by the sum of areas to determine distance of the ARP from each base line.

f. The location is converted into latitude and longitude.

3. ACCURACY. The latitude and longitude should be to the nearest second. Installation of navigational aids may need coordinates to the nearest tenth of a second. Coordinate with the appropriate FAA Airway Facilities field office to ascertain the need for accuracy closer than the nearest second.

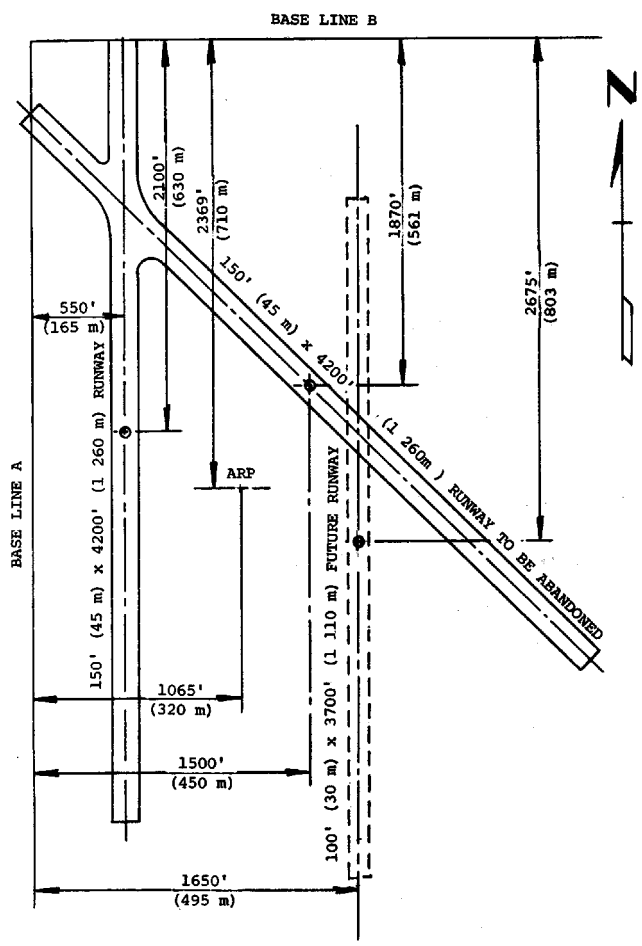

Figure A3-1. Sample layout

U.S. Customary Units

BASE LINE A:

4,200	x	550	=	2,310,000
3,700	x	1,650	=	6,105,000
7,900				8,415,000

$$= \frac{8{,}415{,}000}{7{,}900} = 1{,}065'$$

BASE LINE B:

4,200	x	2,100	=	8,820,000
3,700	x	2,675	=	9,897,500
7,900				18,717,500

$$= \frac{18{,}717{,}500}{7{,}900} = 2{,}369'$$

Metric Units

BASE LINE A:

1 266	x	165	=	207 900
1 110	x	495	=	549 450
2 370				757 350

$$= \frac{757\ 350}{2\ 370} = 320\ \text{m}$$

BASE LINE B:

1 266	x	630	=	793 800
1 110	x	803	=	891 330
2 370				1 685 130

$$= \frac{1\ 685\ 130}{2\ 370} = 710\ \text{m}$$

Note: Since the diagonal runway is to be abandoned, it is not used in the computation.

Figure A3-2. Sample computation – airport reference point

Appendix 6. METRIC CONVERSION AND TYPICAL AIRPORT LAYOUT PLAN

This appendix was cancelled by AC 150/5070-6, Airport Master Plans. Please replace pages 125–130.

This page intentionally left blank.

Appendix 7. AIRPORT LAYOUT PLAN COMPONENTS AND PREPARATION

This appendix was cancelled by AC 150/5070-6, Airport Master Plans. Please replace pages 131–138.

This page intentionally left blank.

Appendix 16. NEW INSTRUMENT APPROACH PROCEDURES

1. BACKGROUND. This appendix applies to the establishment of new authorized instrument approach procedures. For purposes of this appendix, an Instrument Approach Procedure (IAP) amendment or the establishment of a Global Positioning System (GPS) instrument procedure "overlaying" an existing authorized instrument procedure does not constitute a new procedure. However, a significant reduction in minima (i.e. ¼ mile reduction in visibility and/or 50 foot reduction in decision altitude or minimum descent altitude) would constitute a new procedure.

a. This appendix identifies airport landing surface requirements to assist airport sponsors in their evaluation and preparation of the airport landing surface to support new instrument approach procedures. It also lists the airport data provided by the procedure sponsor that the FAA needs to conduct the airport airspace analysis specified in FAA Order 7400.2, *Procedures for Handling Airspace Matters*. The airport must be acceptable for IFR operations based on an Airport Airspace Analysis (AAA), under FAA Order 7400.2.

b. FAA Order 8260, *TERPS*, reflects the contents of this appendix as the minimum airport landing surface requirements that must be met prior to the establishment of instrument approach procedures at a public use airport. This order also references other FAA requirements, such as a safety analysis to determine the need for approach lighting and other visual enhancements to mitigate the effects of a difficult approach environment. This is a consideration regardless of whether or not a reduction in approach minimums is desired. Airport sponsors are always encouraged to consider an approach lighting system to enhance the safety of an instrument procedure. In the absence of any identified benefits or safety enhancement from an approach light system, sponsors should at least consider installing lower cost visual guidance aids such as REIL or PAPI.

c. The tables provided in this appendix are for planning purposes only and should be used in conjunction with the rest of the document. All pertinent requirements within this AC and other FAA documents, as well as local siting conditions, ultimately will determine the lowest minimums obtainable.

2. INTRODUCTION. To be authorized a new instrument approach procedure, the runway must have an instrument runway designation. Instrument runways are runway end specific. The runway end designation is based on the findings of an AAA study (Refer to Order 7400.2). In addition, the instrument runway designation for the desired minimums must be depicted on the FAA-approved ALP. If not depicted, a change to the ALP is required. As part of the ALP approval process, the FAA will conduct an AAA study to determine the runway's acceptability for the desired minimums.

3. ACTION. The airport landing surface must meet the standards specified in tables A16-1 A through C, for each specified runway, direction and have adequate airspace to support the instrument approach procedure. When requesting an instrument procedure, the sponsor must specify the runway direction, the desired approach minimums, whether circling approach procedures are desired, and the survey needed to support the procedure. For all obligated National Plan of Integrated Airport Systems (NPIAS) airports, the sponsor must also provide a copy of the FAA-approved ALP showing the instrument procedure(s) requested. An ALP is also recommended for all other airports.

4. DEFINITIONS.

a. Precision Approach. An instrument approach procedure providing course and vertical path guidance conforming to ILS, or MLS, precision system performance standards contained in ICAO annex 10. Table A16-1A defines the requirements for ILS, LAAS, WAAS, MLS, and other precision systems.

b. Approach Procedure with Vertical Guidance (APV). An instrument approach procedure providing course and vertical path guidance that does not conform to ILS or MLS system performance standards contained in ICAO annex 10, or a precision approach system that does not meet TERPS alignment criteria. Table A16-1B defines the requirements for WAAS and authorized barometric VNAV.

c. Nonprecision Approach. An instrument approach procedure providing course guidance without vertical path guidance. Table A16-3C defines the requirements for VOR, NDB, LDA, GPS (TS0-129) or other authorized RNAV system.

Table A16-1A. Precision Instrument Approach Requirements.

Visibility Minimums[1]	<3/4 statute mile	< 1-statute mile
Height Above Touchdown (HAT)[2]	200	
TERPS Glidepath Qualification Surface (GQS)[3]	Table A2-1, Row 7, Criteria, and Appendix 2, par. 5a Clear	
TERPS precision "W" surfaces [4]	Clear	See Note 5
TERPS Paragraph 251	34:1 Clear	20:1 Clear
Precision Obstacle Free Zone (POFZ) 200 x 800[6]	Required	Not Required
Airport Layout Plan[7]	Required	
Minimum Runway Length	4,200 ft (1,280 m) (Paved)	
Runway Markings (See AC 150/5340-1)	Precision	Nonprecision
Holding Position Signs & Markings (See AC 150/5340-1 and AC 150/5340-18)	Precision	Nonprecision
Runway Edge Lights[8]	HIRL / MIRL	
Parallel Taxiway [9]	Required	
Approach Lights[10]	MALSR, SSALR, or ALSF	Recommended
Runway Design Standards; e.g., Obstacle Free Zone (OFZ) [11]	< 3/4-statute mile approach visibility minimums	≥ 3/4-statute mile approach visibility minimums
Threshold Siting Criteria To Be Met [12]	Table A2-1, Row 9, Criteria	Table A2-1, Row 8, Criteria
Survey Required for Lowest Minima	Table A16-2, Row 10, Criteria	Table A16-2, Row 9, Criteria

1. Visibility minimums are subject to application of FAA Order 8260.3 (TERPS) and associated orders or this table, whichever are higher.
2. The HAT indicated is for planning purposes only. Actual obtainable HAT is determined by TERPS.
3. The GQS is applicable to approach procedures providing vertical path guidance. It limits the magnitude of penetration of the obstruction clearance surfaces overlying the final approach course. The intent is to provide a descent path from DA to landing free of obstructions that could destabilize the established glidepath angle. The GQS is centered on a course from the DA point to the runway threshold. Its width is equal to the precision "W" surface at DA, and tapers uniformly to a width 100 feet from the runway edges. If the GQS is penetrated, vertical guidance instrument approach procedures (ILS/MLS/WAAS/LAAS/Baro-VNAV) are not authorized
4. The "W" surface is applicable to precision approach procedures. It is a sloping obstruction clearance surface (OCS) overlying the final approach course centerline. The surface slope varies with glidepath angle. The "W" surface must be clear to achieve lowest precision minimums. Surface slope varies with glide path angle, 102/angle; e.g., for optimum 3º glide path 34:1 surface must be clear.
5. If the W surface is penetrated, HAT and visibility will be increased as required by TERPS.
6. This is a new airport surface (see paragraph 306). .
7. An ALP is only required for airports in the NPIAS; it is recommended for all others**.**
8. Runway edge lighting is required for night minimums. High intensity lights are required for RVR-based minimums.
9. A parallel taxiway must lead to the threshold and, with airplanes on centerline, keep the airplanes outside the OFZ.
10. To achieve lower visibility minimums based on credit for lighting, a TERPS specified approach light system is required.
11. Indicates what chart should be followed in the related chapters of this document.
12. Circling procedures to a secondary runway from the primary approach will not be authorized when the secondary runway does not meet threshold siting (reference Appendix 2), OFZ (reference paragraph 306) criteria, and TERPS Order paragraph 251 criteria.

Table A16-1B. Approach Procedure With Vertical Guidance (APV-RNP) Approach Requirements

Visibility Minimums[1]	< 3/4-statute mile	< 1-statute mile	1-statute mile	>1-statute mile[14]
Height Above Touchdown (HAT)[2]	250	300	350	400
TERPS Glidepath Qualification Surface (GQS)[3]	Table A2-1, Row 7, Criteria, and Appendix 2, par. 5a Clear			
TERPS Paragraph 251	34:1 clear	20:1 clear	20:1 clear, or penetrations lighted for night minimums (See AC 70/7460-1)	
Precision Obstacle Free Zone (POFZ) 200 x 800[4]	Required	Recommended		
Airport Layout Plan[5]	Required			
Minimum Runway Length	4,200 ft (1,280 m) (Paved)	3,200 ft (975 m)[6] (Paved)	3,200 ft (975 m)[6,7]	
Runway Markings (See AC 150/5340-1)	Nonprecision (Precision Recommended)		Nonprecision[7]	
Holding Position Signs & Markings (See AC 150/5340-1 and AC 150/5340-18)	Nonprecision *(Precision Recommended)*		Nonprecision[7]	
Runway Edge Lights[8]	HIRL / MIRL		MIRL/LIRL	
Parallel Taxiway [9]	Required		Recommended	
Approach Lights[10]	*Required*[11]		Recommended	
Runway Design Standards; e.g., Obstacle Free Zone (OFZ) [12]	APV OFZ Required			
Threshold Siting Criteria To Be Met [13]	Table A2-1, Row 4 and 9, Criteria		Appendix 2, Table A2-1, Lines 4 and 8, Criteria	
Survey Required for Lowest Minima	Table A16-2, Row 6, Criteria			

1. Visibility minimums are subject to the application of FAA Order 8260.3 (TERPS) and associated orders or this table, whichever is higher.
2. The HAT indicated is for planning purposes only. Actual obtainable HAT is determined by TERPS.
3. The GQS is applicable to approach procedures providing vertical path guidance. It limits the magnitude of penetration of the obstruction clearance surfaces overlying the final approach course. The intent is to provide a descent path from DA to landing free of obstructions that could destabilize the established glidepath angle. The GQS is centered on a course from the DA point to the runway threshold. Its width is equal to the precision "W" surface at DA, and tapers uniformly to a width 100 feet from the runway edges. If the GQS is penetrated, vertical guidance instrument approach procedures (ILS/MLS/WAAS/LAAS/Baro-VNAV) are not authorized
4. This is a new airport surface (see paragraph 306)
5. An ALP is only required for obligated airports in the NPIAS; it is recommended for all others**.**
6. Runways less than 3,200 feet are protected by 14 CFR Part 77 to a lesser extent (77.23(a)(2) is not applicable for runways less than 3,200 feet). However runways as short as 2400 feet could support an instrument approach provided the lowest HAT is based on clearing any 200-foot obstacle within the final approach segment.
7. Unpaved runways require case-by-case evaluation by regional Flight Standards personnel.
8. Runway edge lighting is required for night minimums. High intensity lights are required for RVR-based minimums.
9. A parallel taxiway must lead to the threshold and, with airplanes on centerline, keep the airplanes outside the OFZ.
10. To achieve lower visibility minimums based on credit for lighting, a TERPS specified approach light system is required.
11. ODALS, MALS, SSALS are acceptable. For LPV based minima approach lights are recommended not required.
12. Indicates what chart should be followed in the related chapters in this document.
13. Circling procedures to a secondary runway from the primary approach will not be authorized when the secondary runway does not meet threshold siting (reference Appendix 2), OFZ (reference paragraph 306) and TERPS paragraph 251 criteria.
14. For circling requirements, see Table 16-1C.

Table A16-1C. Nonprecision Approach Requirements

Visibility Minimums[1]	< 3/4-statute mile	< 1-statute mile	1-statute mile	>1-statute mile	Circling
Height Above Touchdown [2]	300	340	400	450	Varies
TERPS Paragraph 251	34:1 clear	20:1 clear	20:1 clear or penetrations lighted for night minimums (See AC 70/7460-1)		
Airport Layout Plan[3]	Required				Recommended
Minimum Runway Length	4,200 ft (1,280 m) (Paved)	3,200 ft (975 m)[4] (Paved)	3,200 ft (975 m)[4,5]		
Runway Markings (See AC 150/5340-1)	Precision	Nonprecision[5]			Visual (Basic)[5]
Holding Position Signs & Markings (See AC 150/5340-1 and AC 150/5340-18)	Precision	Nonprecision			Visual (Basic)[5]
Runway Edge Lights[6]	HIRL / MIRL		MIRL / LIRL		MIRL / LIRL (Required only for night minima)
Parallel Taxiway [7]	Required		Recommended		
Approach Lights[8]	MALSR, SSALR, or ALSF Required	Required [9]	Recommended[9]		Not Required
Runway Design Standards, e.g. Obstacle Free Zone (OFZ)[10]	<3/4-statute mile approach visibility minimums	≥ 3/4-statute mile approach visibility minimums			Not Required
Threshold Siting Criteria To Be Met [11]	Table A2-1, Row 9, Criteria	Table A2-1, Row 8, Criteria	Table A2-1, Row 1–5, Criteria		Table A2-1, Row 1–2, Criteria
Survey Required for Lowest Minima	Table A16-2, Row 5, Criteria	Table A16-2, Row 4, Criteria	Table A16-2, Row 3, Criteria		Table A16-2, Row 1,2,3, Criteria

1. Visibility minimums are subject to the application of FAA Order 8260.3 (TERPS) and associated orders or this table, whichever is higher.
2. The Height Above Touchdown (HAT) indicated is for planning purposes only. Actual obtainable HAT is determined by TERPS.
3. An ALP is only required for obligated airports in the NPIAS; it is recommended for all others**.**
4. Runways less than 3,200 feet are protected by 14 CFR Part 77 to a lesser extent. However runways as short as 2400 feet could support an instrument approach provided the lowest HAT is based on clearing any 200-foot obstacle within the final approach segment.
5. Unpaved runways require case-by-case evaluation by regional Flight Standards personnel.
6. Runway edge lighting is required for night minimums. High intensity lights are required for RVR-based minimums.
7. A parallel taxiway must lead to the threshold and, with airplanes on centerline, keep the airplanes outside the OFZ.
8. To achieve lower visibility minimums based on credit for lighting, a TERPS specified approach lighting system is required.
9. ODALS, MALS, SSALS, SALS are acceptable.
10. Indicates what chart should be followed in the related chapters in this document.
11. Circling procedures to a secondary runway from the primary approach will not be authorized when the secondary runway does not meet threshold siting (reference Appendix 2), OFZ (reference paragraph 306), and TERPS Order, 8260.3 paragraph 251, criteria.

Table A16-2. Survey Requirements for Instrument Approach Procedures

The table indicates the acceptable runway obstruction survey needed to support an instrument approach procedure. For a complete description of the survey types and associated requirements, refer to AC 150/5300-18.

		Runway Survey Type								
	Approach	None	AV	BV	ANP	C	SUPLC	D	ANAPC	PIR
1	Night Circling			X	X	X	X	X	X	X
2	Non-Precision Approach ≥ 1SM, Day Only	X	X	X	X	X	X	X	X	X
3	Non-Precision Approach ≥ 1SM				X	X	X	X	X	X
4	Non-Precision Approach < 1SM					X	X	X	X	X
5	Non-Precision Approach < ¾ SM								X	X
6	NPV Approach ≥ ¾ SM							X	X	X
7	NPV Approach < ¾ SM								X	X
8	Precision CAT I Approach < 1SM							X	X	X
9	Precision CAT I Approach < ¾ SM								X	X
10	Precision CAT II Approach									X
11	Precision CAT III Approach									X

Note:
An "X" in each column for a given Approach (1 through 11) denotes a survey that is acceptable to support that approach. As shown, multiple surveys may support the approach, however the "X" farthest to the left indicates the minimum survey needed.

Runway survey types from FAA No. 405, Standards for Aeronautical Surveys and Related Products:

AV - FAR77 Visual Approach - Utility runway, includes approach and primary surfaces only.
BV - FAR77 Visual Approach, includes approach and primary surfaces only.
ANP - FAR77 Nonprecision Approach - Utility runway, includes approach and primary surfaces only.
C - FAR77 Nonprecision Approach - Visibility minimums greater than 3/4 mile includes approach and primary surfaces only.
SUPLC - C Approach underlying a BV approach, includes approach and primary surfaces only.
D - FAR77 Nonprecision Approach - Visibility minimums as low as 3/4 mile includes approach and primary surfaces only.
ANAPC - Area Navigation Approach - Precision, conventional landing, includes approach, primary, transition, and missed approach surfaces.
PIR - FAR77 Precision Instrument Approach, includes approach and primary surfaces only.

Appendix 17. MINIMUM DISTANCES BETWEEN CERTAIN AIRPORT FEATURES AND ANY ON-AIRPORT AGRICULTURE CROPS

Table A17-1. Minimum Distances Between Certain Airport Features and Any On-Airport Agriculture Crops

Aircraft Approach Category and Design Group [1]	Distance in Feet From Runway Centerline to Crop		Distance in Feet From Runway End to Crop		Distance in Feet from Centerline of Taxiway to Crop	Distance in Feet from Edge of Apron to Crop
	Visual & ≥ ¾ mile	< ¾ mile	Visual & ≥ ¾ mile	< ¾ mile		
Category A & B Aircraft						
Group I	200 [2]	400	300[3]	600	45	40
Group II	250	400	400[3]	600	66	58
Group III	400	400	600	800	93	81
Group IV	400	400	1,000	1,000	130	113
Category C, D, & E Aircraft						
Group I	530 [3]	575 [3]	1,000	1,000	45	40
Group II	530 [3]	575 [3]	1,000	1,000	66	58
Group III	530 [3]	575 [3]	1,000	1,000	93	81
Group IV	530 [3]	575 [3]	1,000	1,000	130	113
Group V	530 [3]	575 [3]	1,000	1,000	160	138
Group VI	530 [3]	575 [3]	1,000	1,000	193	167

1. Design Groups are based on wing span or tail height, and Category depends on approach speed of the aircraft as shown below:

Design Group	**Category**
Group I: Wing span up to 49 ft.	Category A: Speed less than 91 knots
Group II Wing span 49 ft. up to 73 ft.	Category B: Speed 91 knots up to 120 knots
Group III: Wing span 79 ft. up to 117 ft.	Category C: Speed 121 knots up to 140 knots
Group IV: Wing span 113 ft. up to 170 ft.	Category D: Speed 141 knots up to 165 knots
Group V: Wing span 171 ft. up to 213 ft.	Category E: Speed 166 knots or more
Group VI: Wing span 214 ft. up to 261 ft.	

2. If the runway will only serve small airplanes (12,500 lb. and under) in Design Group I, this dimension may be reduced to 125 feet; however, this dimension should be increased where necessary to accommodate visual navigational aids that may be installed. For example, farming operations should not be allowed within 25 feet of a Precision Approach Path Indicator (PAPI) light box.

3. These dimensions reflect the Threshold Siting Surface (TSS) as defined in AC 150/5300-13, Appendix 2. The TSS cannot be penetrated by any object. Under these conditions, the TSS is more restrictive than the OFA, and the dimensions shown here are to prevent penetration of the TSS by crops and farm machinery.

Appendix 18. ACRONYMS

The acronyms presented herein are intended for use with this publication only.

AAA	Airport Airspace Analysis
AC	Advisory Circular
AD	Airport Design
AFD	Airport Facility Directory
ADG	Airplane Design Group
AIP	Airport Improvement Program or Aeronautical Information Publication
ALP	Airport Layout Plan
ALS	Approach Lighting System
ALSF(-1, -2)	Approach Lighting System with Sequenced Flashers
APV	Approach Procedure with Vertical Guidance
ARC	Airport Reference Code
ARP	Airport Reference Point
ASDA	Accelerate-Stop Distance Available
ASDE	Airport Surface Detection Equipment
ASR	Airport Surveillance Radar
ATC	Air Traffic Control
ATCT	Airport Traffic Control Tower
AWOS	Automated Weather Observing System
AZ	Azimuth
BRL	Building Restriction Line
CAT	Category
CFR	Code of Federal Regulation
CFW	Center Field Wind
CWY	Clearway
DA	Decision Altitude
DER	Departure End of Runway
DME	Distance Measuring Equipment
DXF	AutoCAD Drawing Interchange file format
EDS	Environmental Data Service
EL	Elevation
FBO	Fixed Base Operator
GPA	Glidepath Angle
GPS	Global Positioning System
GQS	Glidepath Qualification Surface
GS	Glide Slope
GVGI	Generic Visual Slope Indicator
HAT	Height Above Touchdown
HIRL	High Intensity Runway Lights
IFR	Instrument Flight Rules
IGES	Initial Graphics Exchange Specification file format
ILS	Instrument Landing System
IM	Inner Marker
IMC	Instrument Meteorological Conditions
LAAS	Local Area Augmentation System
LDA	Landing Distance Available or Localizer Type Directional Aid
LDIN	Lead-In Lights
LIRS	Low Impact Resistant Supports
LNAV	Lateral Navigation
LOC	Localizer
LPV	Localizer Performance with Vertical Guidance
MALS	Medium Intensity Approach Lighting System
MALSF	Medium Intensity Approach Lighting System with Sequenced Flashers
MALSR	Medium Intensity Approach Lighting System with Runway Alignment Indicator Lights
MIRL	Medium Intensity Runway Lights
MLS	Microwave Landing System
MM	Middle Marker
MSL	Mean Sea Level
NAVAID	Navigational Aid
NCDC	National Climatic Data Center
NDB	Nondirectional Beacon
NP	Mon-Precision (Markings
NPIAS	National Plan of Integrated Airport Systems
NTIS	National Technical Information Service
OCS	Obstacle Clearance Surface
ODALS	Omnidirectional Approach Lighting System
OEI	One Engine Inoperative
OFA	Object Free Area
OFZ	Obstacle Free Zone
OIS	Obstacle Identification Surface
OM	Outer Marker
NPA	Non-Precision Approach
P	Precision (Markings)
PA	Precision Approach
PAPI	Precision Approach Path Indicator
POFA	Precision Object Free Area
RAIL	Runway Alignment Indicator Lights
REIL	Runway End Identifier Lights
RNAV	Area Navigation
ROFA	Runway Object Free Area
RPZ	Runway Protection Zone
RSA	Runway Safety Area
RVR	Runway Visual Range
RW	Runway
SALS	Short Approach Lighting System
SSALR	Short Simplified Approach Lighting System with Runway Alignment Indicator Lights
SSALS	Simplified Short Approach Lighting System
SWY	Stopway
TCH	Threshold Crossing Height
TERPS	FAA Order 8260.3, *United States Standard for Terminal Instrument Procedures*
TH	Threshold
TL	Taxilane
TODA	Takeoff Distance Available
TORA	Takeoff Run Available
TSA	Taxiway Safety Area
TVOR	Terminal Very High Frequency Omnirange
TW	Taxiway

USGS	United States Geological Service
V	Visual (Markings)
V_1	Takeoff decision speed
V_2	Takeoff safety speed
VFR	Visual Flight Rules
V_{LOF}	Lift-off speed
V_{SO}	Stalling speed or the minimum steady flight speed in the landing configuration
VNAV	Vertical Navigation
VOR	Very High Frequency Omnirange
WAAS	Wide Area Augmentation System

Appendix 19. INDEX

Accelerate-Stop Distance Available (ASDA)
definition....2
length....276
Acronyms....297
Administration Building....118
Aeronautical Studies....6, 13
Aircraft Approach Category
airplane listing....251
definition....1
selection....5
Aircraft Parking Area....10, 14, 15, 117, 139
Airplane Data....156, 165, 251
Airplane Design Group (ADG)
airplane listing....251
definition....1
selection....5
Airport Buildings....117
Airport Design Standards Modification....5
Airport Elevation
definition....1
Airport Layout Plan (ALP)
application....9
definition....1
requirements....5
Airport property requirements....9
Airport Reference Code (ARC)
definition....4
standards....5
Airport Reference Point (ARP)
definition....1
standards....109
Airport Rotating Beacon....65
Airport Surface Detection Equipment (ASDE)....66
Airport Surveillance Radar (ASR)....66
Airport survey....122
Airport Traffic Control Tower (ATCT)....65
Airport Traffic Control Tower Visibility....10, 35
Airspace Availability....9
Approach Lighting System (ALS)
ALSF-2....64
MALS....64
MALSF....64
MALSR....64
Apron for Based Airplanes....117
Aprons
criteria....10
gradient....54
Auto Parking....13, 123
Aviation easements....9
Bird Hazards....10, 13
Blast Fence
criteria....77
definition....1
Bridges
approach aprons....70
blast protection....70
curbs....70
height....69
length....69
load considerations....69
longitudinal grades....69
marking and lighting....69
pavement heating....70
security fences....7
service roads....70
siting precepts....69
width....69
Building Plan....122
Building Restriction Lie (BRL)
criteria....12
definition....1
Bypass Taxiway....34
Category (CATI) Runway....2
Category (CATII) Runway....2
Category III (CAT III) Runway....2
Center Field Wind (CFW) Installations....66
Clear Zone....1
Clear Zone (See Runway Protection Zone)....2, 13, 276
Clearway (CWY)
definition....1
standards....22, 139, 276
Compass Calibration Pad
criteria....111
definition....1
Computer Program....34, 35, 88, 146, 153
Crosswind Runway....10, 87
Crosswinds
definition....87
Declared Distances
criteria....275, 276
definition....2
Displaced Threshold
definition....3
siting requirements....101
Dual Parallel Taxiway....34
Eating Facilities....123
Electronic Deliverables....283
Entrance Taxiway....34
Environmental Assessments....6, 9
Exit Taxiway....35, 142
FAA Studies of Objects....6, 13
Federal Assistance....6

Frangible NAVAID
definition ... 2
Hangars ... 118
Hazard to Air Navigation
definition ... 2
determination ... 6
presumption ... 2
Holding Bay ... 34
Holdline
to runway ... 10, 14, 15, 139
Inner-approach OFZ
definition ... 2
standards ... 22
Inner-transitional OFZ
definition ... 2
standards ... 22
Instrument Approach Procedures ... 291
Instrument Landing System (1LS)
glide slope ... 61, 62
localizer ... 61, 62
marker beacons ... 61, 63
Jet Blast
heat effects ... 77
pressures ... 77
velocity distances ... 77
Landing Distance Available (LDA)
definition ... 2
length ... 276
Large Airplane
definition ... 2
Lead-in Lighting System (LDIN) ... 65
Local Role ... 6
Low Impact Resistant Supports (LIRS)
definition ... 2
Manager's Office ... 123
Microwave Landing System (MLS) ... 59
Modification of Airport Design Standards ... 5
Navigational Aids (NAVAIDs)
clearing requirements ... 59
non-Federal ... 59
protection ... 59, 67
siting ... 59
Nondirectional Beacon (NDB) ... 63
Notice to the FAA
airport development ... 5
proposed construction ... 6
Object
definition ... 2
Object Clearing Criteria
recommendations ... 13
standards ... 12
Object Free Area (OFA)
definition ... 2
standards ... 22, 33, 276
Obstacle Free Zone (OFZ)
definition ... 2
standards ... 21, 139
Obstruction to Air Navigation
definition ... 2
presumption ... 2
survey requirement ... 9
Omindirectional Approach Lighting System (ODALS) ... 65
Parallel Taxiway ... 33
Precision Object Free Area ... 22
Property requirements ... 9
Public Restrooms ... 123
Recommendations
requirement ... 1
Related Reading Material ... 3
Rescue and Firefighting Access Roads ... 23
Roads ... 123
Runway (RW)
definition ... 3
gradient ... 49
length ... 21
line of sight ... 56
location ... 9
orientation ... 9, 87
requirements for additional runways ... 10, 87
to aircraft parking area ... 10, 14, 15, 139
to helicopter touchdown pad ... 10, 14, 15
to holdline ... 10, 14, 15, 139
to parallel runway ... 11
to parallel taxilane ... 10, 12, 14, 15, 139
to parallel taxiway ... 10, 12, 14, 15, 139
width ... 21
Runway Blast Pad
definition ... 3
drainage ... 78
gradient ... 54
length ... 21, 78
marking sod lighting ... 78
surface characteristics ... 21
surface strength ... 78
width ... 21, 78
Runway Object Free Area
background ... 139
definition ... 2
standards ... 22, 276
Runway Obstacle Free Zone (OFZ)
definition ... 2
standards ... 21
Runway Protection Zone (RPZ)
criteria ... 13, 140, 276
definition ... 3
Runway Safety Area (RSA)
background ... 139
definition ... 3
gradient ... 54
length ... 21, 276
surface characteristics ... 21
width ... 21

Runway Shoulder
definition (See Shoulder) 3
drainage 78
gradient 54
marking and lighting 78
strength 78
surface characteristics 21
width 21, 78
Runway visibility zone 56
Runway Visual Range Facilities 66
Separation Standards 10, 14-16
Shoulder
definition 3
Small Airplane
definition 3
Standards
applicability 5
modification 5
requirements 1
State Role 6
Stopway (SWY)
definition 3
gradient 49
location 23
standards 139
surface characteristics 23
width 23
Takeoff Distance Available (TODA)
definition 1
length 276
Takeoff Run Available (TORA)
definition 1
length 276
Taxilane (TL)
airport traffic control tower visibility 35
definition 3
dimensional standards 33
on apron edge 35
to object 10, l6, 141
to parallel runway 10, 12, 14, 15, 139
to parallel taxilane 10, l6, 141
to parallel taxiway 10, l6, 141
to parked aircraft 10, l6, 141
to service and maintenance roads 10, l6, 141
Taxilane Object Free Area
definition 2
standards 33
width 33, 141
wingtip clearance 33
Taxiway (TW)
airport traffic control tower visibility 35
definition 3
dimensional standards 33
edge safety margin 34, 38
gradient 54
intersections 34
layout 10
line of sight 56
on apron edge 35
pavement filet 34, 38, 40, 149
taxiway between parallel runways 35
to object 10, 16, 141
to parallel runway 10, 12, 14, 15, 139
to parallel taxilane 10, l6, 141
to parallel taxiway 10, l6, 141
to parked aircraft 10, l6, 141
to service and maintenance roads 10, l6, 141
width 33, 38, 141
Taxiway Object Free Area
definition 2
standards 33
width 33, 141
wingtip clearance 33
Taxiway Safety Area (TSA)
definition 3
gradient 54
surface characteristics 33
width 33, 142
Taxiway Shoulder
definition (See Shoulder) 3
drainage 78
gradient 54
marking and lighting 78
strength 78
surface characteristics 33
width 33, 78
Terminal Very High Frequency Omnirange (TVOR) 64
Threshold (TH)
definition 3
siting requirements 101
Tiedowns 117, 118
Transient Apron 117
Tunnels
drainage 70
lighting 70
passenger and baggage 70
ventilation 70
Turnaround 35
Vehicle Parking 13, 123
Visual Runway
definition 3
Waiting Room 122
Wildlife Hazards 10, 13
Wind Analysis 9, 87
Wind Coverage 87
Wingtip Clearance 33, 146