FAA-CT-8080-6A

COMPUTER TESTING SUPPLEMENT FOR FLIGHT ENGINEER

DO NOT MARK IN THIS BOOK

U.S. Department of Transportation
Federal Aviation Administration

COMPUTER TESTING SUPPLEMENT
FOR
FLIGHT ENGINEER

1999

U.S. DEPARTMENT OF TRANSPORTATION
FEDERAL AVIATION ADMINISTRATION
Flight Standards Service

PREFACE

This computer testing supplement is designed by the Flight Standards Service of the Federal Aviation Administration (FAA) for use by computer testing designees (CTD's) in the administration of airman knowledge tests in the following knowledge areas:

Original ratings:

Flight Engineer—Turbojet and Basic (FEX)
Flight Engineer—Turboprop and Basic (FET)
Flight Engineer—Reciprocating and Basic (FEN)

Added ratings:

Turbojet (FEJ)
Turboprop (FEP)
Reciprocating (FER)

FAA-CT-8080-6A supercedes FAA-CT-8080-6, Computerized Testing Supplement for Flight Engineer, dated 1993.

Comments regarding this supplement should be sent to:

U.S. Department of Transportation
Federal Aviation Administration
Airman Testing Standards Branch, AFS-630
P.O. Box 25082
Oklahoma City, OK 73125-0082

CONTENTS

Preface iii
Contents v

FIGURE 1.— Common Hand Signals 1
FIGURE 2.—Takeoff Speeds 2
FIGURE 3.—Cabin Oxygen Duration 3
FIGURE 4.—Dual Container Installation 4
FIGURE 5.—Fire Detection System and Fire Switches 4
FIGURE 6.—Table of U.S. Standard Atmosphere 5
FIGURE 7.—Internal Engine Pressures and Temperatures 6
FIGURE 8.—Dual-Spool Axial-Flow Compressor 6
FIGURE 9.—Major Subassemblies of an Axial-Flow Gas Turbine Engine 7
FIGURE 10.—Powerplant Instruments 8
FIGURE 11.—Hydromatic Propeller Installation 9
FIGURE 12.—Hydromatic Propeller Installation 10
FIGURE 13.—Go-Around EPR 11
FIGURE 14.—Maximum Takeoff N_1 12
FIGURE 15.—Maximum Takeoff EPR 13
FIGURE 16.—Maximum Takeoff EPR 14
FIGURE 17.—Normal/Maximum Takeoff Thrust 15
FIGURE 18.—Torque Requirement Conditions 16
FIGURE 19.—Minimum Takeoff Torque 16
FIGURE 20.—Takeoff Power Conditions 17
FIGURE 21.—Takeoff Power Conditions 17
FIGURE 22.—Operating Conditions 18
FIGURE 23.—Power Schedule 19
FIGURE 24.—Conversion Factors 20
FIGURE 25.—Conversion Factors 21
FIGURE 26.—Fuel Dump Conditions 22
FIGURE 27.—Cruise Conditions 22
FIGURE 28.—Cruise Conditions 22
FIGURE 29.—Cruise Power Table 23
FIGURE 30.—Fuel Dump Conditions 24
FIGURE 31.—Loading Tables 25
FIGURE 32.—CG Shift 26
FIGURE 33.—CG in Percent of MAC 26
FIGURE 34.—CG Added Weight 26
FIGURE 35.—CG Position Change 27
FIGURE 36.—CG Position Change 27
FIGURE 37.—Loading Conditions 27
FIGURE 38.—CG Position Change 28
FIGURE 39.—Weight Shift Conditions 28
FIGURE 40.—CG Load Conditions 28
FIGURE 41.—CG Weight Conditions 29
FIGURE 42.—CG Weight Conditions 29
FIGURE 43.—Weight Removal Conditions 29
FIGURE 44.—Cargo Shift 30
FIGURE 45.—Maximum Payload 30
FIGURE 46.—Cruise Weight Change 30
FIGURE 47.—Gross Weight Table 31
FIGURE 48.—Cargo Shift Conditions 32
FIGURE 49.—Maximum Payload Conditions 32
FIGURE 50.—Landing Weight Conditions 32
FIGURE 51.—Cruise Chart 33
FIGURE 52.—Maximum Payload Conditions 34
FIGURE 53.—Cargo Shift Conditions 34

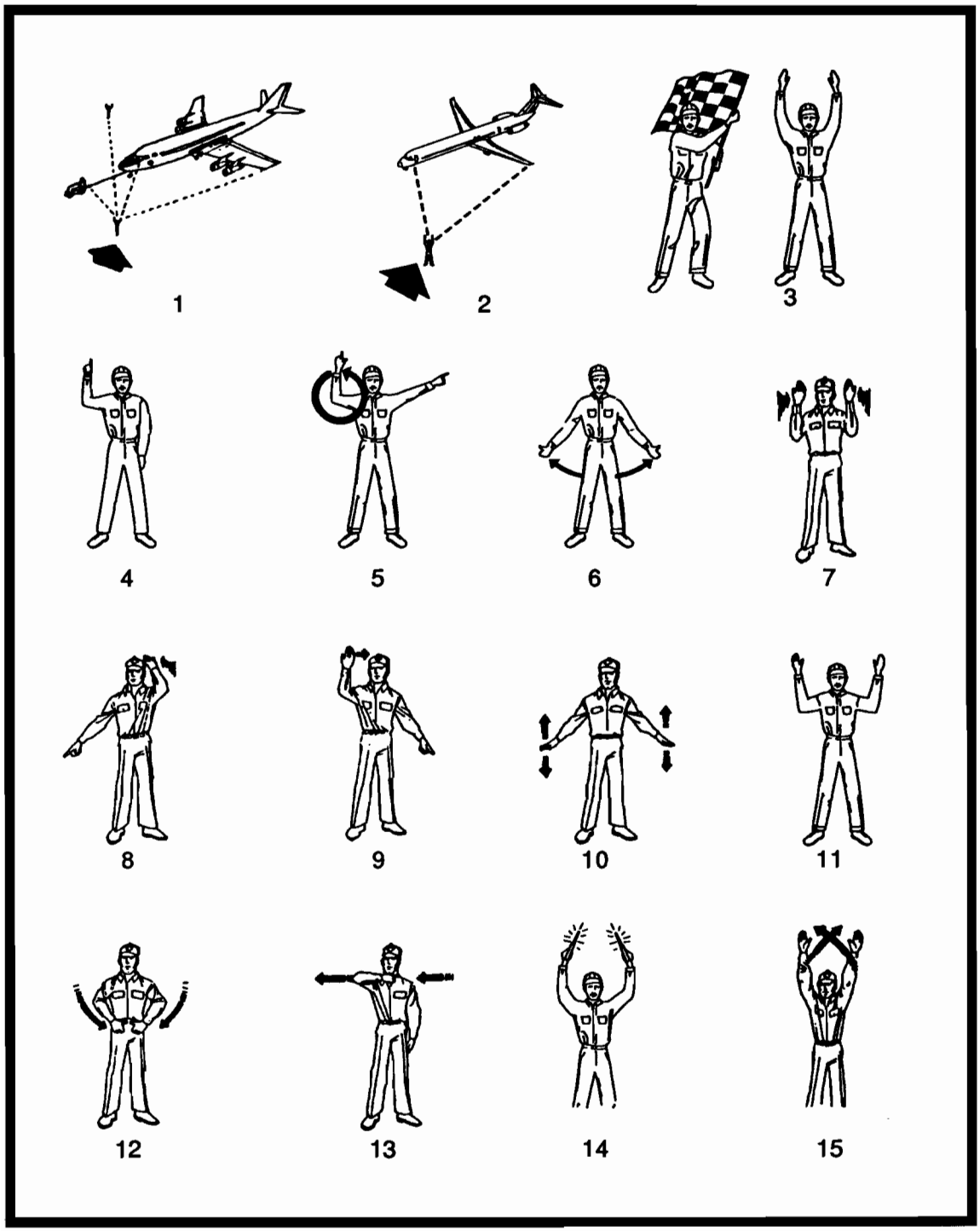

FIGURE 1.—Common Hand Signals.

TAKEOFF SPEEDS

ALT. —1000 FT.	AMBIENT TEMPERATURE —° F				
6 to 7	— — —	— — —	-20 to 5	5 to 25	25 to 85
5 to 6	— — —	-20 to 5	5 to 25	25 to 45	45 to 95
4 to 5	-20 to -5	-5 to 25	25 to 45	45 to 85	85 to 105
3 to 4	-20 to 15	15 to 35	35 to 55	55 to 95	95 to 105
2 to 3	-20 to 35	35 to 55	55 to 85	85 to 105	105 to 120
1 to 2	-20 to 55	55 to 85	85 to 95	95 to 120	— — —
0 to 1	-20 to 85	85 to 95	95 to 105	105 to 120	— — —

FLAP POS	WEIGHT — 1000 LB	V_1 V_R V_2	V_1 V_R V_2	V_1 V_R V_2	V_1 V_R V_2	V_1 V_R V_2
25	325	140 154 162	141 154 161	142 154 161	144 155 161	
	320	138 153 160	139 153 160	141 153 160	143 154 160	145 154 160
	300	132 147 156	133 147 155	134 147 155	136 148 155	138 149 154
	V BASIC					
	280	126 141 151	127 142 151	128 142 151	130 142 150	131 143 150
	260	119 135 147	120 136 146	121 136 146	123 137 145	124 138 145
	240	112 128 142	113 129 141	114 129 141	116 130 140	117 131 140
	220	106 122 135	107 123 136	108 124 136	109 124 135	110 125 134
	200	99 120 136	100 118 133	100 115 130	102 117 130	103 118 129
	180	108 120 138	104 118 134	102 114 130	98 110 126	95 111 124
	V_1 Limit	108 — —	104 — —	102 — —	99 — —	— — —
15	325	143 159 169	144 160 169	145 161 169	144 160 169	
	320	142 157 168	142 158 168	144 160 168	146 159 168	143 161 167
	300	135 151 163	136 152 163	137 153 163	139 152 163	142 155 162
	V BASIC					
	280	129 145 158	129 146 158	131 147 158	132 146 157	135 149 157
	260	122 139 153	123 140 153	124 141 153	125 140 153	128 142 152
	240	115 132 148	116 133 148	117 134 148	118 134 147	121 136 146
	220	109 125 143	109 126 143	110 127 143	111 127 142	113 129 140
	200	108 120 140	102 119 137	103 120 137	104 119 136	106 122 135
	180	108 120 143	104 118 139	95 116 134	96 113 131	98 114 129
	V_1 Limit	108 — —	104 — —	102 — —	99 — —	— — —

Compare adjusted V_1 Basic speed with V_1 Limit speed and use the higher speed.

ADJUSTMENTS:

1. **Headwind: For each 15 knots, increase V_1 Basic 1 knot.**
2. **Tailwind: For each 5 knots, decrease V_1 Basic 1 knot.**
3. **Airports BOS R/W 17, TAS R/W 1 & 7, SEA R/W 16, decrease V_1 Basic 3 knots.**
4. **Airports BOS R/W 35, TAS R/W 19 & 25, SEA R/W 34, increase V_1 Basic 3 knots.**

FIGURE 2.—Takeoff Speeds.

The table below gives the approximate duration of the cabin oxygen system, based on a cylinder pressure of 1500 PSI.

CABIN ALTITUDE	NUMBER OF PASSENGERS	* APPROX. DURATION
15,000	50	62 min
	75	40 min
	100	28 min
	135	23 min
20,000	50	41 min
	75	26 min
	100	19 min
	135	16 min
25,000	50	27 min
	75	17 min
	100	12 min
	135	10 min

*For cylinder pressures less than 1500 PSI, reduce duration by 8 percent for each 100 PSI.

FIGURE 3.—Cabin Oxygen Duration.

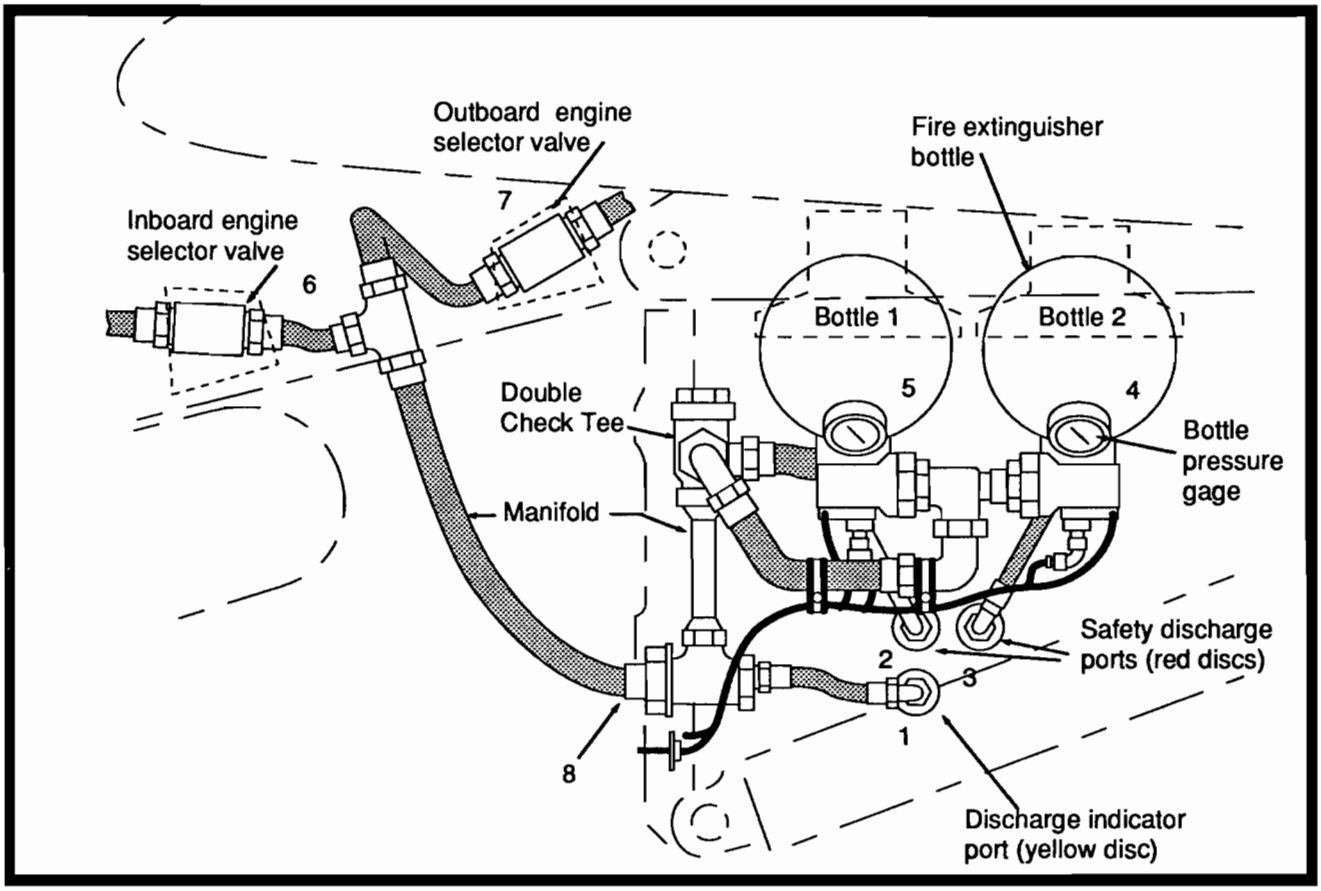

FIGURE 4.—Dual Container Installation.

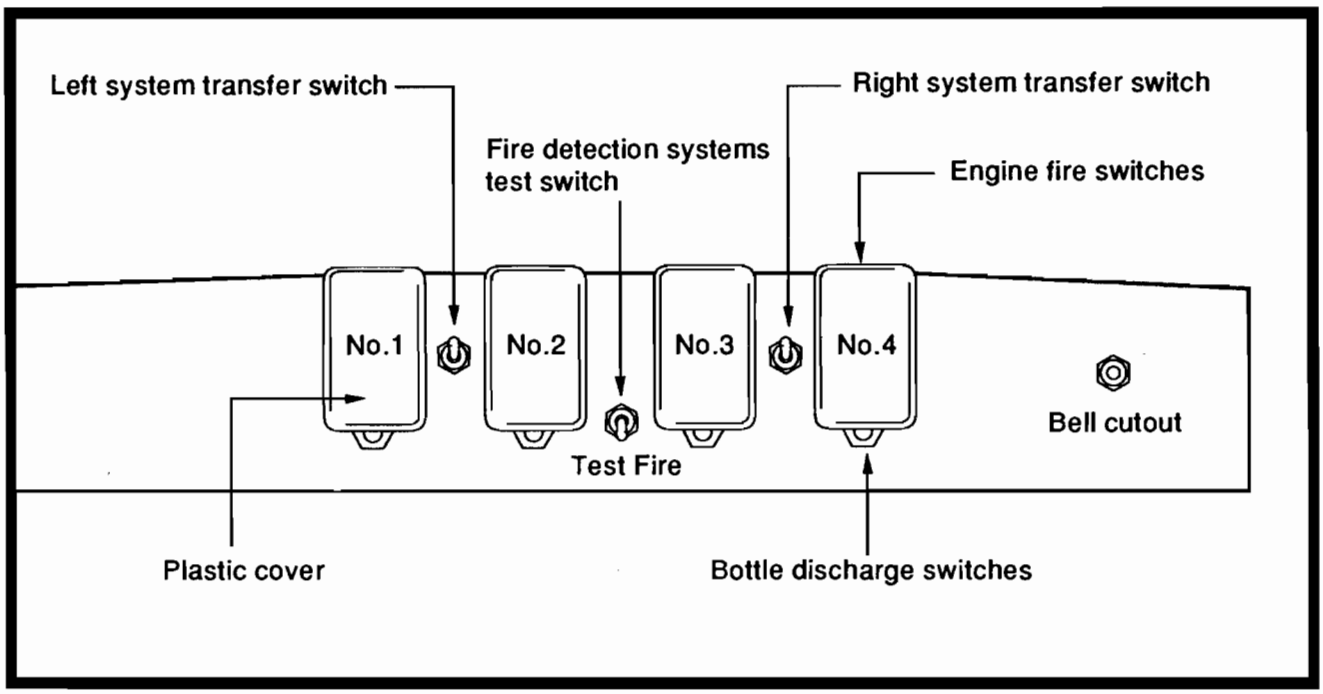

FIGURE 5.—Fire Detection System and Fire Switches.

TABLE OF U.S. STANDARD ATMOSPHERE

Feet	inHg	mmHg	PSI	°C	°F
0	29.92	760.0	14.70	15.0	59.0
2,000	27.82	706.7	13.66	11.0	51.9
4,000	25.84	656.3	12.69	7.1	44.7
6,000	23.98	609.1	11.78	3.1	37.6
8,000	22.23	564.6	10.92	-0.8	30.5
10,000	20.58	522.7	10.11	-4.8	23.3
12,000	19.03	483.4	9.35	-8.8	16.2
14,000	17.58	446.5	8.63	-12.7	9.1
16,000	16.22	412.0	7.96	-16.7	1.9
18,000	14.95	379.7	7.34	-20.7	-5.2
20,000	13.76	349.5	6.75	-24.6	-12.3
22,000	12.65	321.3	6.21	-28.6	-19.5
24,000	11.61	294.9	5.70	-32.5	-26.6
26,000	10.64	270.3	5.22	-36.5	-33.7
28,000	9.74	237.4	4.78	-40.5	-40.9
30,000	8.90	226.1	4.37	-44.4	-48.0
32,000	8.12	206.3	3.98	-48.4	-55.1
34,000	7.40	188.0	3.63	-52.4	-62.3
36,000	6.73	171.0	3.30	-56.3	-69.4
38,000	6.12	155.5	2.99	-56.5	-69.7
40,000	5.56	141.2	2.72	-56.5	-69.7
42,000	5.05	128.3	2.47	-56.5	-69.7
44,000	4.59	116.6	2.24	-56.5	-69.7
46,000	4.17	105.9	2.04	-56.5	-69.7
48,000	3.79	96.3	1.85	-56.5	-69.7
50,000	3.44	87.4	1.68	-56.5	-69.7
55,000	2.71	68.6	1.32	TEMPERATURE REMAINS CONSTANT	
60,000	2.14	54.4	1.04		

inHg= Inches of Mercury

mmHg= Millimeter of Mercury

PSI= Pounds per square inch

°C= Centigrade

°F= Fahrenheit

FIGURE 6.—Table of U.S. Standard Atmosphere.

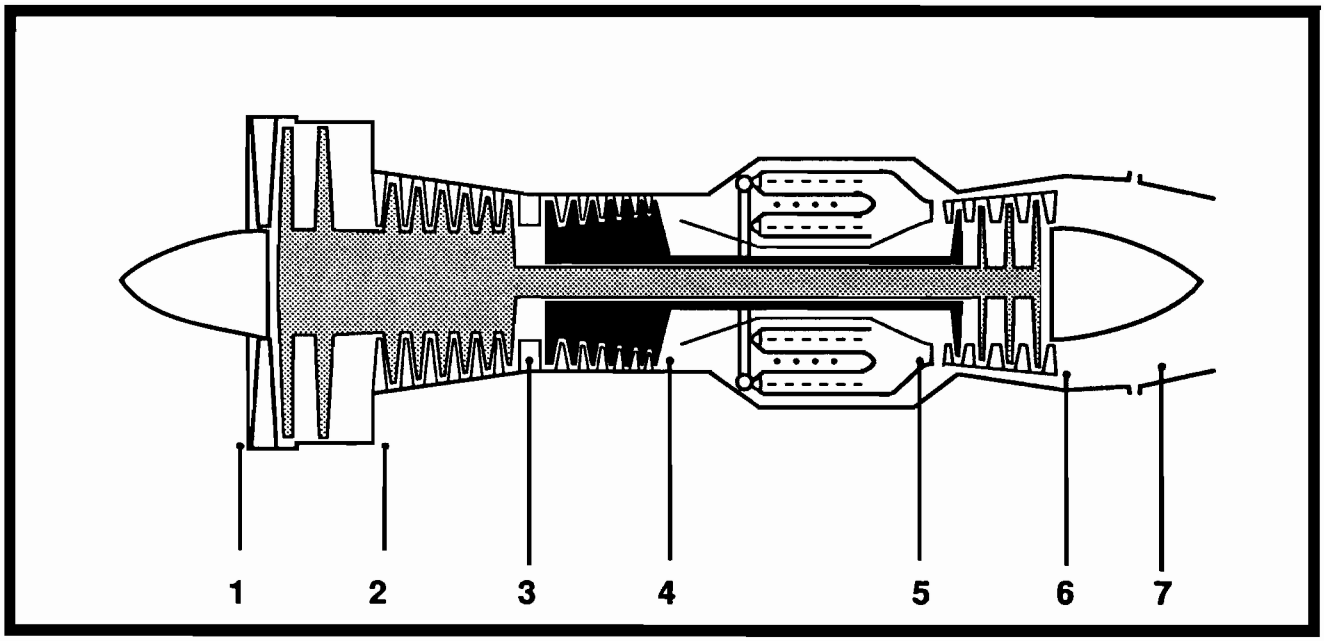

FIGURE 7.—Internal Engine Pressures and Temperatures.

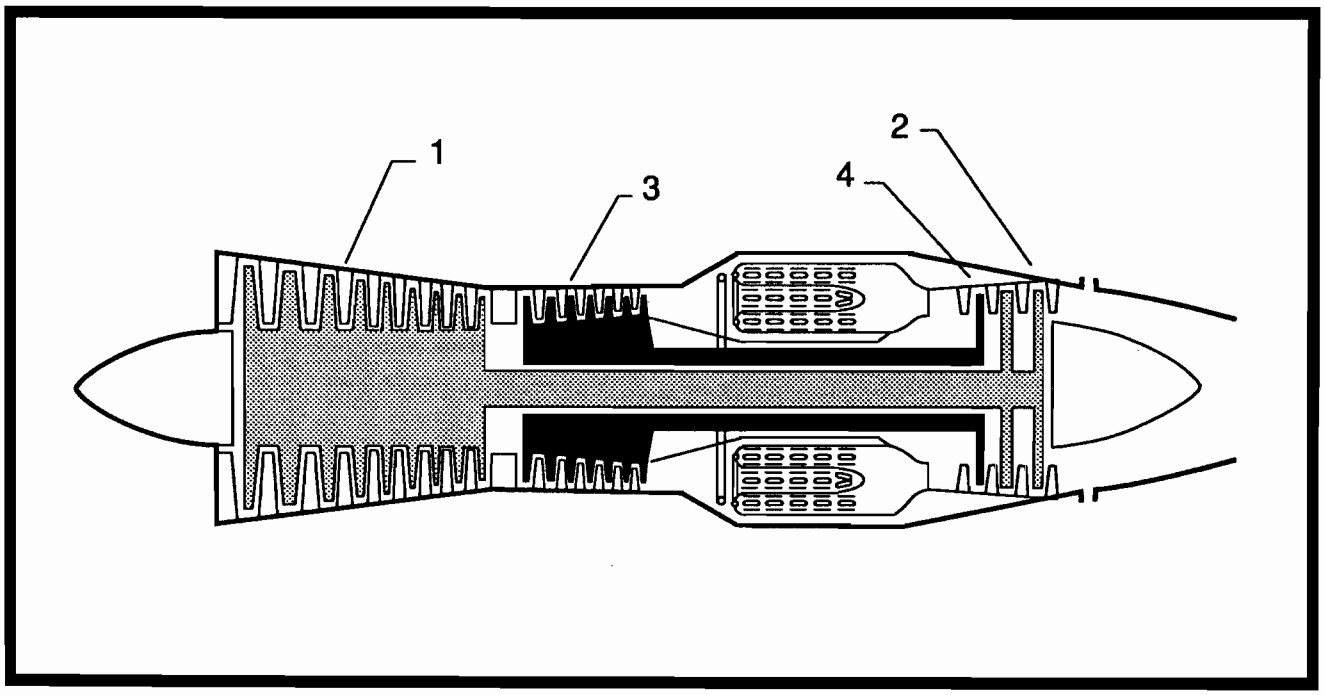

FIGURE 8.—Dual-Spool Axial-Flow Compressor.

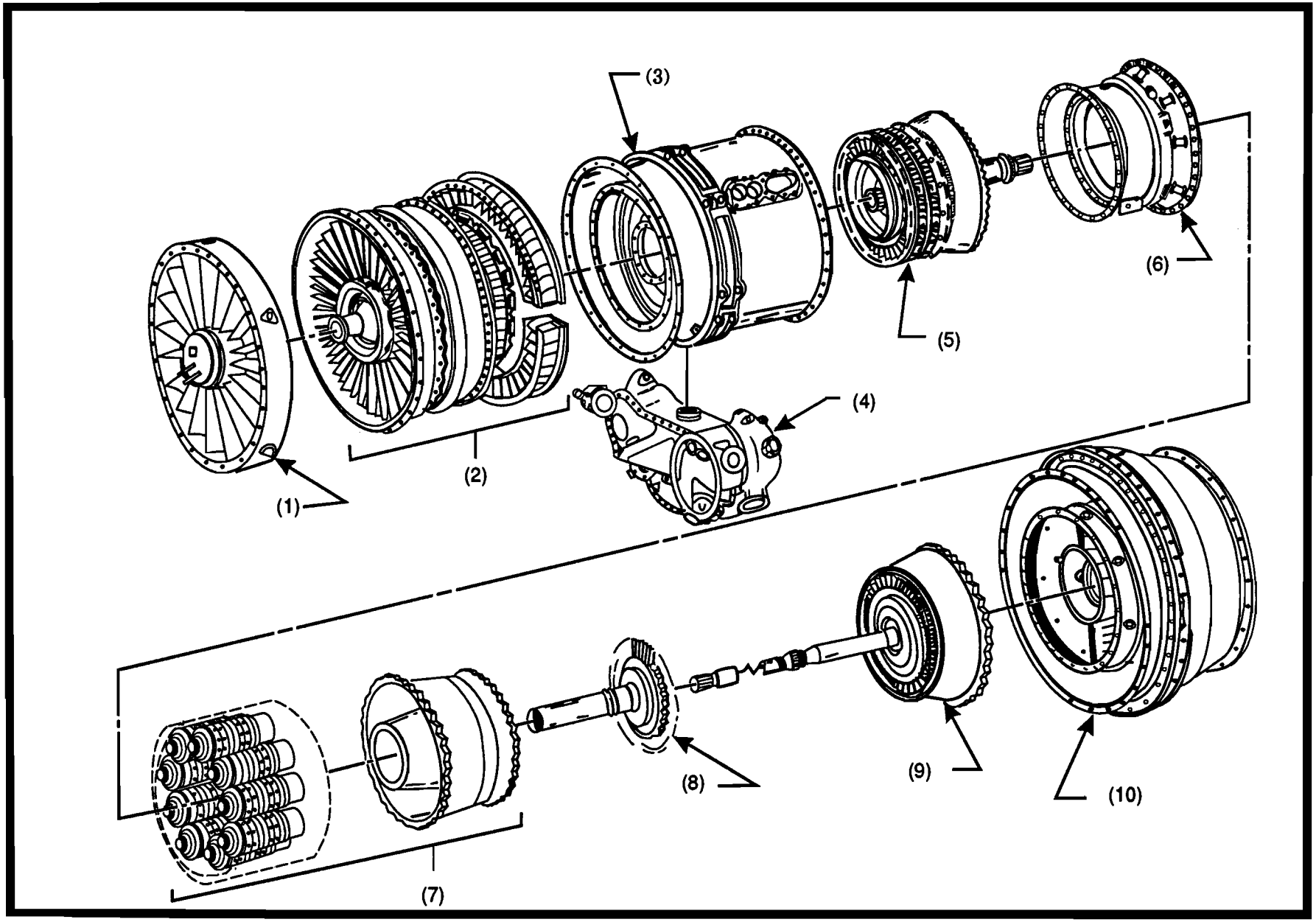

FIGURE 9.—Major Subassemblies of an Axial-Flow Gas Turbine Engine.

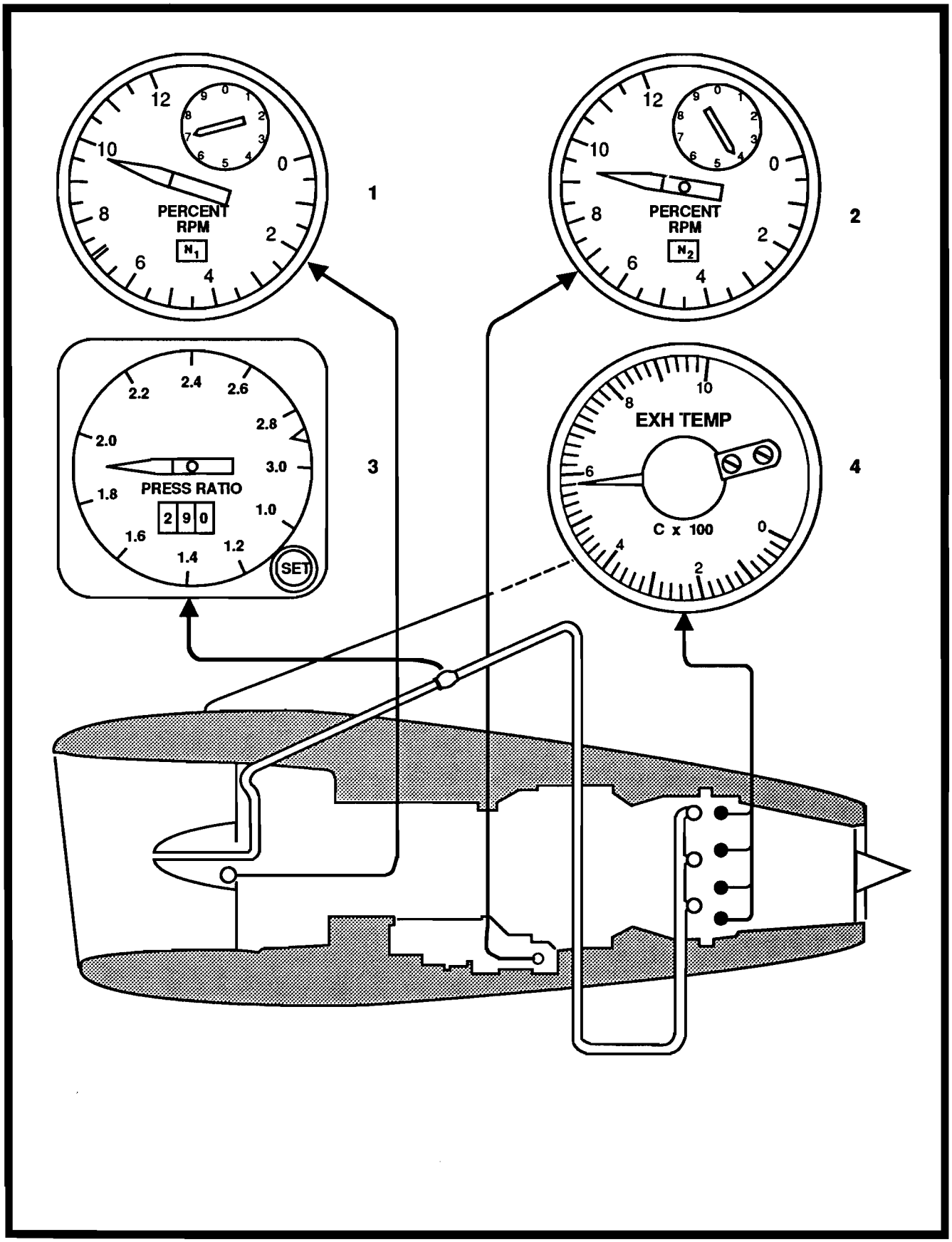

FIGURE 10.—Powerplant Instruments.

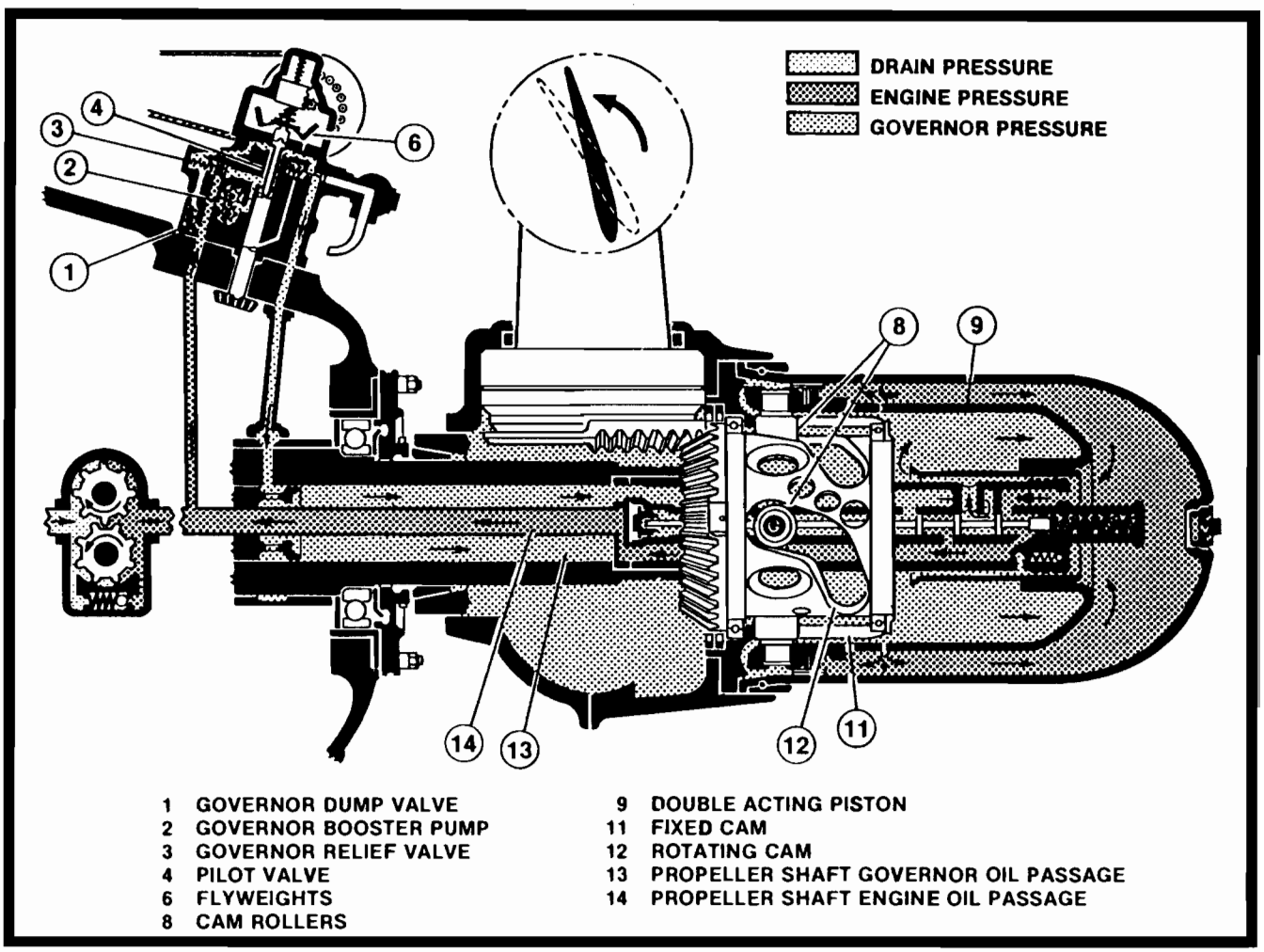

FIGURE 11.—Hydromatic Propeller Installation.

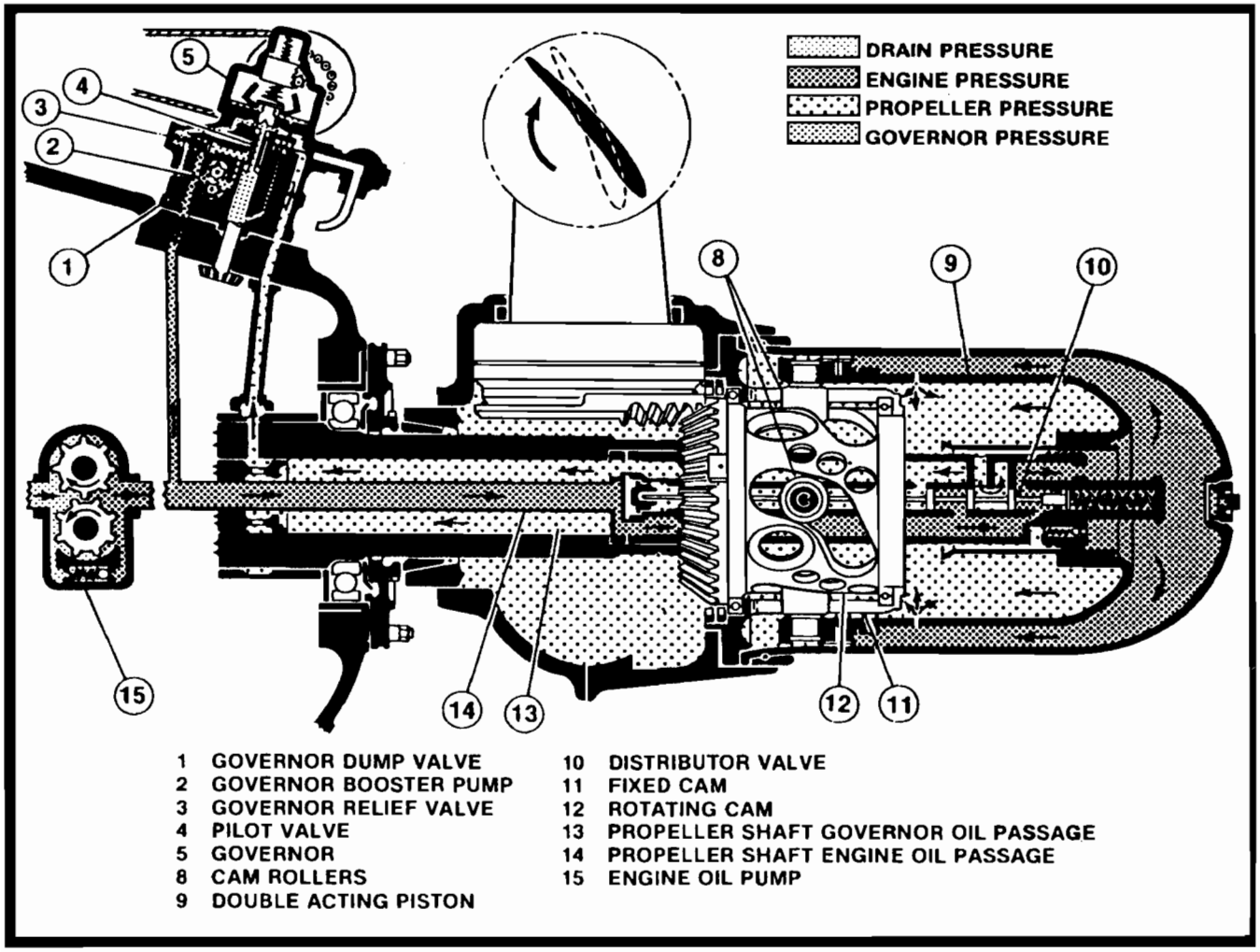

FIGURE 12.—Hydromatic Propeller Installation.

GO AROUND EPR

ENG 1 & 3
ENG 2

A/C ON
NO BLEED

PRESSURE ALTITUDE-FT	OAT °F		-82	-10	0	10	18	27	38	47	55	69	73	83	91	100	110	119
	OAT °C		-63	-23	-18	-13	-8	-3	3	8	13	18	23	28	33	38	43	48
	TAT °C		-60	-20	-15	-10	-5	0	5	10	15	20	25	30	35	40	45	50
-1000	ENGINE	1 & 3	2.02	2.02	2.02	2.02	2.02	2.02	2.02	2.02	2.02	2.02	2.02	2.02	2.02	1.99	1.94	1.89
		2	2.04	2.04	2.04	2.04	2.04	2.04	2.04	2.04	2.04	2.04	2.04	2.04	2.04	2.01	1.97	1.91
SEA LEVEL		1 & 3	2.07	2.07	2.07	2.07	2.07	2.07	2.07	2.07	2.07	2.07	2.07	2.07	2.04	1.99	1.94	1.89
		2	2.09	2.09	2.09	2.09	2.09	2.09	2.09	2.09	2.09	2.09	2.09	2.09	2.06	2.01	1.97	1.91
1000		1 & 3	2.12	2.12	2.12	2.12	2.12	2.12	2.12	2.12	2.09	2.09	2.09	2.08	2.04	1.99	1.94	1.89
		2	2.15	2.15	2.15	2.15	2.15	2.15	2.15	2.15	2.12	2.12	2.12	2.10	2.06	2.01	1.97	1.91
2000		1 & 3	2.18	2.18	2.18	2.18	2.18	2.18	2.17	2.13	2.12	2.12	2.10	2.08	2.04	1.99	1.91	1.89
		2	2.20	2.20	2.20	2.20	2.20	2.20	2.19	2.16	2.15	2.15	2.13	2.10	2.06	2.01	1.97	1.91
3000		1 & 3	2.24	2.24	2.24	2.24	2.23	2.20	2.17	2.13	2.12	2.12	2.10	2.08	2.04	1.99	1.94	1.89
		2	2.27	2.27	2.27	2.27	2.25	2.22	2.19	2.16	2.15	2.15	2.13	2.10	2.06	2.01	1.97	1.91
3900 AND ABOVE		1 & 3	2.30	2.30	2.28	2.26	2.23	2.20	2.17	2.13	2.12	2.12	2.10	2.08	2.04	1.99	1.94	1.89
		2	2.32	2.32	2.30	2.28	2.25	2.22	2.19	2.16	2.15	2.15	2.13	2.10	2.06	2.01	1.97	1.91

EPR BLEED CORRECTIONS		ENG 1&3	ENG 2
A/C BLEEDS		OFF +.04	ON -.04
ENGINE ANTI-ICE ON		--	-.03
ENGINE AND WING ANTI-ICE ON	TWO ENGINE BLEEDS	-.09	-.03
	ONE ENGINE BLEED	-0.10	-.03

FIGURE 13.—Go-Around EPR.

MAX TAKEOFF N_1

OAT	°F	-65	-49	-40	-31	-22	-13	-4	5	14	23	32	41	50	59	68	77	86	95	104	113	120
	°C	-54	-45	-40	-35	-30	-25	-20	-15	-10	-5	0	5	10	15	20	25	30	35	40	45	49
PRESS ALT FT -1000		83.2	84.8	85.7	86.5	87.4	88.3	89.2	90.1	91.0	91.9	92.7	93.5	94.3	95.2	95.9	96.7	97.5	98.1	97.2	96.3	95.6
S.L.		84.7	86.3	87.2	88.1	89.1	90.0	90.9	91.8	92.7	93.6	94.4	95.3	96.1	96.9	97.8	98.5	99.0	98.1	97.2	96.3	95.6
1000		86.4	88.0	88.9	89.9	90.8	91.7	92.7	93.6	94.5	95.4	96.3	97.1	97.4	97.8	98.6	99.2	99.0	98.1	97.2	96.3	95.6
2000		88.1	89.8	90.8	91.7	92.7	93.6	94.6	95.5	96.4	97.3	97.9	97.8	97.7	98.5	99.2	99.2	99.0	98.1	97.2	96.3	95.6
3000		89.8	91.6	92.6	93.5	94.5	95.5	96.5	97.4	98.0	98.0	97.9	97.8	97.7	98.5	99.2	99.2	99.0	98.1	97.2	96.3	95.6
3856 & ABOVE		91.2	93.1	94.1	95.1	96.1	97.1	97.7	97.8	98.0	98.0	97.9	97.8	97.7	98.5	99.2	99.2	99.0	98.1	97.2	96.3	95.6

N_1 BLEED CORRECTIONS — **ENG 1 & 3 AIRBLEED OFF + 1.3**

FIGURE 14.—Maximum Takeoff N_1.

MAX TAKEOFF EPR

0 - 60 KNOTS

ENG 1 & 3 AIRBLEED ON
ENG 2 NO AIRBLEED

PRESS ALT FT	OAT	° F ° C	-67 TO -9 -55 TO -23	-4 -20	5 -15	14 -10	23 -5	32 0	41 5	50 10	59 15	68 20	77 25	86 30	95 35	104 40	113 45	120 49
-1000		1 & 3 2	2.04 2.06	2.04 2.06	2.04 2.06	2.04 2.06	2.04 2.06	2.04 2.06	2.04 2.06	2.04 2.06	2.04 2.06	2.04 2.06	2.04 2.06	2.04 2.06	2.03 2.05	1.99 2.00	1.94 1.96	1.91 1.92
S.L.		1 & 3 2	2.10 2.11	2.10 2.11	2.10 2.11	2.10 2.11	2.10 2.11	2.10 2.11	2.10 2.11	2.10 2.11	2.10 2.11	2.10 2.11	2.10 2.11	2.08 2.10	2.03 2.05	1.99 2.00	1.94 1.96	1.91 1.92
1000		1 & 3 2	2.15 2.16	2.15 2.16	2.15 2.16	2.15 2.16	2.15 2.16	2.15 2.16	2.15 2.16	2.13 2.15	2.12 2.13	2.12 2.13	2.11 2.12	2.08 2.10	2.03 2.05	1.99 2.00	1.94 1.96	1.91 1.92
2000		1 & 3 2	2.21 2.22	2.21 2.22	2.21 2.22	2.21 2.22	2.21 2.22	2.20 2.21	2.17 2.18	2.14 2.16	2.14 2.16	2.14 2.15	2.11 2.12	2.08 2.10	2.03 2.05	1.99 2.00	1.94 1.96	1.91 1.92
3000		1 & 3 2	2.26 2.28	2.26 2.28	2.26 2.28	2.25 2.27	2.23 2.24	2.20 2.21	2.17 2.18	2.14 2.16	2.14 2.16	2.14 2.15	2.11 2.12	2.08 2.10	2.03 2.05	1.99 2.00	1.94 1.96	1.91 1.92
3856 & ABOVE		1 & 3 2	2.31 2.32	2.31 2.32	2.27 2.28	2.25 2.27	2.23 2.24	2.20 2.21	2.17 2.18	2.14 2.16	2.14 2.16	2.14 2.15	2.11 2.12	2.08 2.10	2.03 2.05	1.99 2.00	1.94 1.96	1.91 1.92

EPR BLEED CORRECTIONS	ENG 1 & 3	ENG 2
AIR CONDITIONING	OFF + .04	-
ENGINE ANTI-ICE ON	-	-.03

FIGURE 15.—Maximum Takeoff EPR.

MAX TAKEOFF EPR

DRY																				
OAT	°F	-58	-40	-31	-22	-13	-4	5	14	23	32	41	50	59	68	77	86	95	104	122
	°C	-50	-40	-35	-30	-25	-20	-15	-10	-5	0	5	10	15	20	25	30	35	40	50
T/C	ON	2.07	2.05	2.04	2.03	2.02	2.01	1.99	1.98	1.96	1.93	1.89	1.87	1.83	1.83	1.83	1.82	1.77	1.73	1.63
	OFF	2.12	2.10	2.09	2.08	2.06	2.05	2.03	2.01	1.99	1.96	1.92	1.89	1.85	1.85	1.85	1.84	1.79	1.75	1.65
T/C	ON	2.06			2.02			1.98		1.93		1.88	1.83				1.78			
	OFF	2.11			2.06			2.01		1.96		1.91	1.85				1.80			
		5000			4000			3000		2000		1000	SL				-1000			

MAX EPR FOR COLDER TEMPS AT PRESS ALT

40 TO 80 KTS
ENG A/I ON OR OFF

FIGURE 16.—Maximum Takeoff EPR.

NORMAL TAKEOFF THRUST

1. Determine Max EPR from the Maximum Takeoff Thrust table.
2. Using Assumed Temperature and MAX EPR, determine Normal EPR.

EPR is valid when set at 40 – 80 knots, two cabin compressors are on, blowaway jets are off.

ASSUM TEMP °F	MAX EPR											
	1.86	1.87	1.89	1.90	1.91	1.93	1.95	1.96	1.97	1.99	2.00	2.01
	NORMAL EPR											
120	1.75	1.76	1.78	1.79	1.80	1.82	1.84	1.85	1.86	1.88	1.89	1.90
115	1.75	1.76	1.78	1.79	1.80	1.82	1.84	1.85	1.86	1.88	1.89	1.90
110	1.75	1.76	1.78	1.79	1.80	1.82	1.84	1.85	1.86	1.88	1.89	1.90
105	1.75	1.76	1.78	1.79	1.80	1.82	1.84	1.85	1.86	1.88	1.89	1.90
100	1.77	1.77	1.78	1.79	1.80	1.82	1.84	1.85	1.86	1.88	1.89	1.90
95	1.80	1.80	1.80	1.80	1.80	1.82	1.84	1.85	1.86	1.88	1.89	1.90
90	1.82	1.82	1.82	1.82	1.82	1.82	1.84	1.85	1.86	1.88	1.89	1.90
85	1.85	1.85	1.85	1.85	1.85	1.85	1.85	1.85	1.86	1.88	1.89	1.90
80	1.86	1.86	1.86	1.86	1.86	1.86	1.86	1.86	1.86	1.88	1.89	1.90
75	1.86	1.86	1.86	1.86	1.86	1.86	1.86	1.86	1.86	1.88	1.89	1.90
70	1.86	1.86	1.86	1.86	1.86	1.86	1.86	1.86	1.86	1.88	1.89	1.90
65	1.86	1.86	1.86	1.86	1.86	1.86	1.86	1.86	1.86	1.88	1.89	1.90
60	1.86	1.86	1.86	1.86	1.86	1.86	1.86	1.86	1.86	1.88	1.89	1.90
55	1.86	1.87	1.87	1.87	1.87	1.87	1.87	1.87	1.87	1.88	1.89	1.90
50	1.86	1.87	1.89	1.89	1.89	1.89	1.89	1.89	1.89	1.89	1.89	1.90
45	1.86	1.87	1.89	1.90	1.91	1.91	1.91	1.91	1.91	1.91	1.91	1.91
40	1.86	1.87	1.89	1.90	1.91	1.93	1.93	1.93	1.93	1.93	1.93	1.93
35	1.86	1.87	1.89	1.90	1.91	1.93	1.95	1.95	1.95	1.95	1.95	1.95
30	1.86	1.87	1.89	1.90	1.91	1.93	1.95	1.96	1.96	1.96	1.96	1.96
25	1.86	1.87	1.89	1.90	1.91	1.93	1.95	1.96	1.97	1.97	1.97	1.97

ADJUSTMENTS:

1. All cabin compressors off, add .01.
2. Rain removal on, subtract .01.

MAXIMUM TAKEOFF THRUST

OAT °F	PRESSURE ALTITUDE (1,000 feet)					
	SL	1	2	3	4	Above 4
75	1.86	1.86	1.86	1.86	1.86	1.86
70	1.86	1.86	1.86	1.86	1.86	1.86
65	1.86	1.86	1.86	1.86	1.86	1.86
60	1.86	1.86	1.86	1.86	1.86	1.86
55	1.86	1.87	1.87	1.87	1.87	1.87
50	1.86	1.89	1.89	1.89	1.89	1.89
47	1.86	1.90	1.90	1.90	1.90	1.90
45	1.86	1.90	1.91	1.91	1.91	1.91
40	1.86	1.90	1.93	1.93	1.93	1.93
35	1.86	1.90	1.95	1.95	1.95	1.95
33	1.86	1.90	1.95	1.95	1.95	1.95
30	1.86	1.90	1.95	1.96	1.96	1.96
25	1.86	1.90	1.95	1.97	1.97	1.97
20	1.86	1.90	1.95	1.99	1.99	1.99
16	1.86	1.90	1.95	2.00	2.00	2.00
15	1.86	1.90	1.95	2.00	2.01	2.01
10	1.86	1.90	1.95	2.00	2.02	2.02
5	1.86	1.90	1.95	2.00	2.03	2.03
0	1.86	1.90	1.95	2.00	2.04	2.04
-5	1.86	1.90	1.95	2.00	2.05	2.05

FIGURE 17.—Normal/Maximum Takeoff Thrust.

OPERATING CONDITIONS		1	2	3
PRESSURE ALTITUDE	FT	1,000	10,000	1,500
CAS	KT	100	140	120
AMBIENT TEMPERATURE	°C	0	-10	-30

FIGURE 18.—Torque Requirement Conditions.

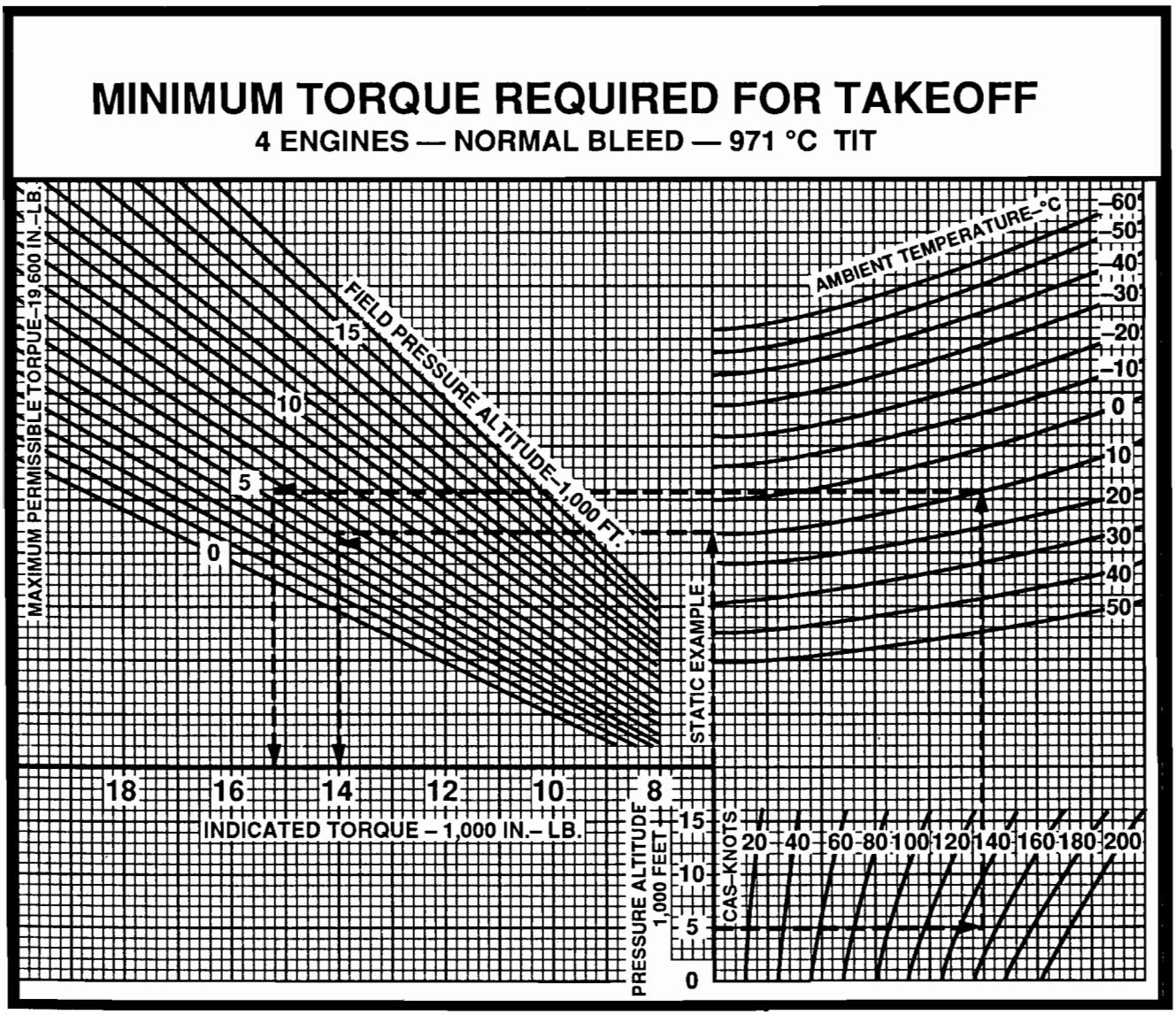

FIGURE 19.—Minimum Takeoff Torque.

OPERATING CONDITIONS		1	2	3
PRESSURE ALTITUDE	FT	1,000	10,000	2,500
CAS	KT	100	120	140
AMBIENT TEMPERATURE	°C	+10	-10	+10

FIGURE 20.—Takeoff Power Conditions.

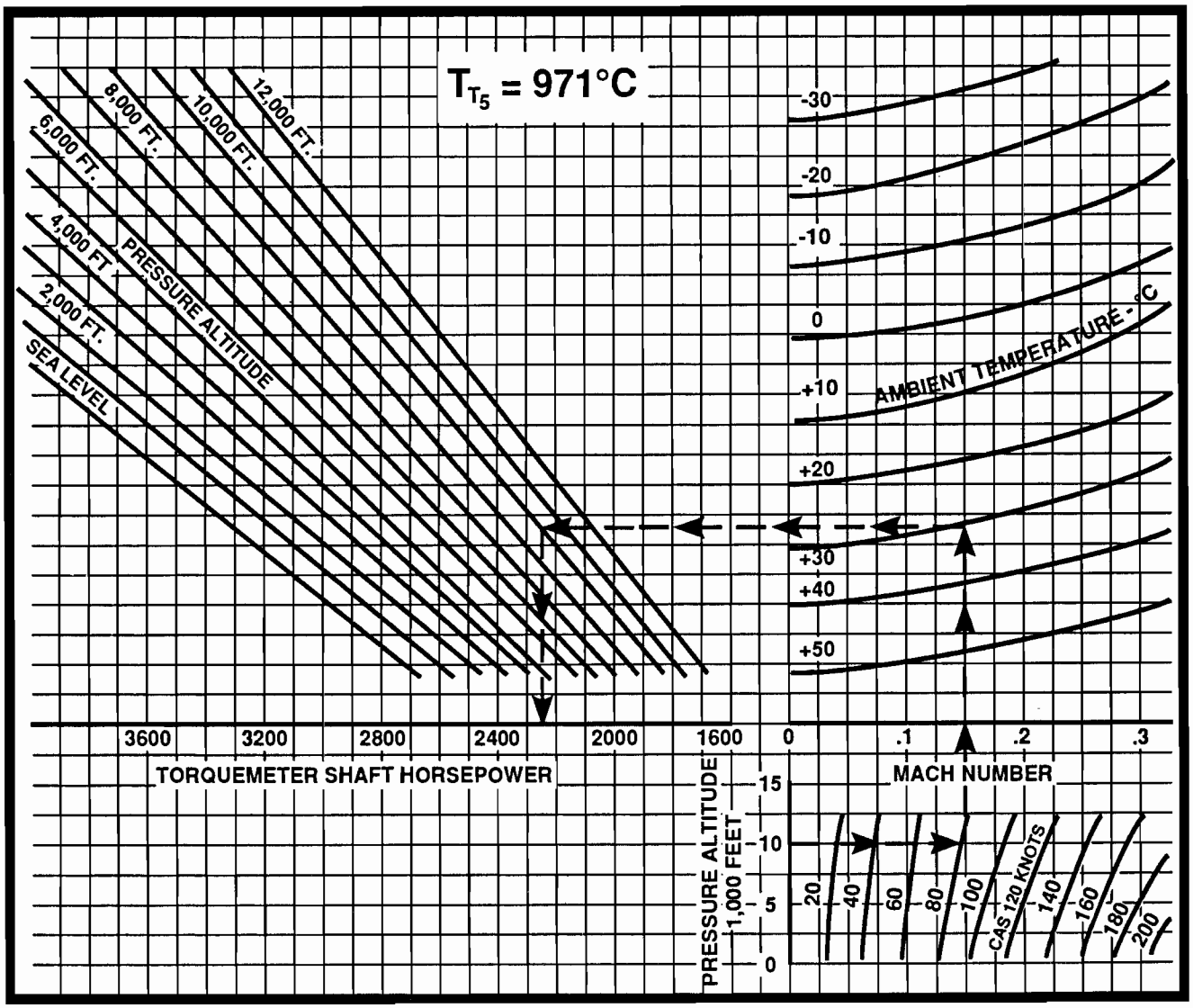

FIGURE 21.—Takeoff Power Conditions.

OPERATING CONDITIONS	1	2	3
CAT	86 °F	95 °F	20 °C
DEWPOINT	40 °F	90 °F	13 °C
ADI	ON	ON	OFF

FIGURE 22.—Operating Conditions.

POWER SCHEDULE
P&W R-2800 CB-16 WET TAKEOFF
BMEP AT VARIOUS CONDITIONS OF TEMPERATURE & HUMIDITY
2800 RPM, SEA LEVEL, ADI ON

MANIFOLD PRESSURE	DEWPOINT TEMPERATURE		CARBURETOR AIR TEMPERATURE						
			10°C	15°C	20°C	25°C	30°C	35°C	40°C
*	°C	°F	50°F	59°F	68 °F	77 °F	86 °F	95 °F	104°F
59.6	-4	25	244	242	240	238	235	233	231
59.7	-1	30	244	242	239	238	235	233	231
59.7	1	35	243	241	239	237	234	232	230
59.7	4	40	242	240	238	236	234	232	230
59.8	7	45	242	240	238	236	233	231	229
59.8	10	50	241	239	237	235	233	231	228
59.9	13	55		238	236	234	232	230	228
60.0	16	60		238	235	234	231	229	227
60.1	18	65			234	233	230	228	226
60.2	21	70			233	232	229	227	225
60.4	24	75				230	228	226	224
60.5	27	80				228	226	224	222
60.7	29	85					224	222	220
60.9	32	90						220	218

* 59.5 INCHES OF MANIFOLD PRESSURE PLUS EXISTING VAPOR PRESSURE, UP TO 1.5 INCHES.

SPECIAL NOTE - FOR CB-16 DRY TAKEOFF POWER SCHEDULE APPLY THE FOLLOWING:

RPM = 2700

SUBTRACT APPROXIMATELY 30 BMEP FROM THE ABOVE SETTINGS.

SUBTRACT APPROXIMATELY 5 INCHES OF MANIFOLD PRESSURE FROM THE ABOVE SETTINGS.

FIGURE 23.—Power Schedule.

To Convert From	To	Multiply By
acres	sq ft	4.356×10^{4}
atmospheres	cm Hg at 0°C in. Hg at 0°C lb/sq in bars	76.00 29.92 14.696 1.013
bars	lb/sq in	14.5
Btu	ft-lb kilowatt-hr joules	778.26 2.931×10^{-4} 1055
Btu/sec	watts	1055
centimeters	in	0.3937
cm Hg	in. H_2O at 4°C lb/sq in	5.354 1.934×10^{-1}
cm/second	Ft/sec	3.281×10^{-2}
circular mils	sq in	7.854×10^{-7}
cu centimeters	cu in U.S. gal	6.102×10^{-2} 2.642×10^{-4}
cu ft	cu cm U.S. gal liters	2.832×10^{4} 7.481 28.32
cu ft H_2O	lb	62.428
cu in.	cu cm liters U.S. gal	16.39 1.639×10^{-2} 4.329×10^{-3}
cu meters	U.S. gal	264.2
deg (arc)	radians	1.745×10^{-2}
feet	meters	3.048×10^{-1}
ft/min	mph km/hr	1.136×10^{-2} 1.829×10^{-2}
ft/sec	mph cm/sec knots	.6818 30.48 .5925

To Convert From	To	Multiply By
ft–lb/min	hp	3.030×10^{-5}
ft–lb/sec	hp kilowatts	1.818×10^{-3} 1.356×10^{-3}
fluid oz	dram	8
gal. Imperial	cu in. U.S. gal liters	277.4 1.201 4.546
gal, U.S. dry	U.S. gal, liquid	1.164
gal, U.S. liquid	cu in.	231.0
grams	oz avdp lb avdp	3.527×10^{-2} 2.205×10^{-3}
grams/cm	lb/ft	6.721×10^{-2}
hectopieze	in. Hg	29.53
horsepower	ft–lb/min ft–lb/sec m–kg/sec kilowatts Btu/sec	33,000 550 76.04 7.457×10^{-1} 7.068×10^{-1}
horsepower metric	hp	9.863×10^{-1}
in.	cm	2.540
in. water at 4°C	in. Hg at 0°C	7.355×10^{-2}
kilograms	lb oz	2.205 35.27
kilometers	ft miles nautical miles	3.281×10^{3} 6.214×10^{-1} 5.400×10^{-1}
km/hr	ft/sec knots mph	9.113×10^{-1} 5.396×10^{-1} 6.214×10^{-1}
kilowatts	Btu/sec hp	9.480×10^{-1} 1.341

FIGURE 24.—Conversion Factors.

To Convert From	To	Multiply By
knots	nautical mph ft/sec mph	1.0 1.688 1.151
liters	cu cm cu in U.S. gal	10^3 61.03 2.642×10^{-1}
meters	in ft	39.37 3.281
meter-kilogram	ft-lb	7.233
meter/set	ft/sec	3.281
microns	in	3.937×10^{-5}
statute miles (SM)	ft km	5280 1.609
mph	ft/sec km/hr knots	1.467 1.609 8.690×10^{-1}
millibars	in Hg at 0°C	2.953×10^{-2}
nautical miles (NM)	ft SM m	6076.1 1.151 1852
ounces, avdp	grams	28.35

To Convert From	To	Multiply By
ounces, fluid	cu in	1.805
lb/avdp	grams ounces	453.6 16.0
lb/cu in	grams/cu cm	27.68
lb/sq in	in Hg at 0 °C	2.036
radians	deg (arc)	57.30
radians/sec	deg/sec rev/min	57.30 9.549
revolutions	radians	6.283 [2π]
rev/min	radians/sec	1.047×10^{-1}
slug	lb	32.174
sq cm	sq in	$1{,}550 \times 10^{-1}$
sq ft	sq cm	929.0
sq in	sq cm	6.452
sq meters	sq ft	10.76
sq miles	sq km	2.590
watts	Btu/sec	9.481×10^{-4}

FIGURE 25.—Conversion Factors.

OPERATING CONDITIONS		1	2
AIRCRAFT WEIGHT - START DUMP	LB	113,000	111,500
ZERO FUEL WEIGHT	LB	77,000	80,000
DUMP RATE	LB/MIN	1,350	1,350
DUMP TIME	MIN	22	15
FUEL FLOW	LB/HR/ENG	1,200	1,500
ENGINES OPERATING DURING DUMP		4	3

FIGURE 26.—Fuel Dump Conditions.

OPERATING CONDITIONS		1	2	3	4
NM/1,000 LB		55.4	62.0	67.2	72.5
TAS	KT	200	220	240	260
WIND COMPONENT	KT	10 HW	10 TW	20 HW	20 TW
CRUISE TIME	HR	4.0	4.5	5.0	--

FIGURE 27.—Cruise Conditions.

OPERATING CONDITIONS (4 ENG)		1	2	3
BEGINNING TOTAL WEIGHT	LB	97,520	88,500	95,400
ZERO FULL WEIGHT	LB	68,450	69,700	80,100
PRESSURE ALTITUDE		14,000	17,000	19,000
1200 BHP CRUISE TIME		1:25	:40	:55
1100 BHP CRUISE TIME		1:40	2:15	1:35
1000 BHP CRUISE TIME		2:10	—	1:20

FIGURE 28.—Cruise Conditions.

STANDARD CRUISE POWER TABLE

1,200 Brake Horsepower

PRESSURE ALTITUDE FEET	BLOWER	RPM	BMEP	BMEP DROP	SPARK	FUEL FLOW lb/hr/eng
0 - 3,000	LOW	2200	154	12	Cruise	545
3,001 - 6,000	LOW	2200	154	12	Cruise	545
6,001 - 9,000	LOW	2200	154	12	Cruise	545
9,001 - 12,000	LOW	2200	154	12	Cruise	545
12,001 - 14,000	LOW	2200	154	12	Cruise	545
14,001 - 16,000	LOW	2300	148	12	Cruise	555
15,001 - 21,000	HIGH	2300	148	12	TO & CL	575

1,100 Brake Horsepower

PRESSURE ALTITUDE FEET	BLOWER	RPM	BMEP	BMEP DROP	SPARK	FUEL FLOW lb/hr/eng
0 - 3,000	LOW	2100	148	12	Cruise	495
3,001 - 6,000	LOW	2100	148	12	Cruise	495
6,001 - 9,000	LOW	2100	148	12	Cruise	495
9,001 - 12,000	LOW	2100	148	12	Cruise	495
12,001 - 14,000	LOW	2100	148	12	Cruise	495
14,001 - 16,000	LOW	2200	142	12	Cruise	505
15,001 - 17,000	HIGH	2100	149	12	*Cruise	510
17,001 - 20,000	HIGH	2200	142	12	*Cruise	520
20,001 - 24,000	HIGH	2300	135	12	TO & CL	535

1,000 Brake Horsepower

PRESSURE ALTITUDE FEET	BLOWER	RPM	BMEP	BMEP DROP	SPARK	FUEL FLOW lb/hr/eng
0 - 3,000	LOW	1850	153	12	Cruise	440
3,001 - 6,000	LOW	1850	153	12	Cruise	440
6,001 - 9,000	LOW	1850	153	12	Cruise	440
9,001 - 12,000	LOW	1950	145	12	Cruise	445
12,001 - 15,000	LOW	2100	135	12	Cruise	455
15,001 - 18,000	LOW	2200	129	12	Cruise	465
15,001 - 18,000	HIGH	2100	135	12	*Cruise	470
18,001 - 21,000	HIGH	2200	129	12	*Cruise	480
21,001 - 24,000	HIGH	2300	123	12	TO & CL	495

FIGURE 29.—Cruise Power Table.

OPERATING CONDITIONS (4 ENG.)		1	2	3
AIRCRAFT WEIGHT - START DUMP	LB	102,000	96,500	100,100
ZERO FUEL WEIGHT	LB	83,200	72,700	76,150
DUMP RATE	LB/MIN	2,736	2,736	2,736
DUMP TIME	MIN	5.6	7.2	6.9
FUEL FLOW	LB/HR/ENG	495	715	545
ENGINES OPERATING DURING DUMP		4	3	4

FIGURE 30.—Fuel Dump Conditions.

PASSENGER LOADING TABLE

Number of Pass.	Weight Lb	Moment / 1000
Forward Compartment Centroid-582.0		
5	850	495
10	1,700	989
15	2,550	1,484
20	3,400	1,979
25	4,250	2,473
29	4,930	2,869
AFT Compartment Centroid-1028.0		
10	1,700	1,748
20	3,400	3,495
30	5,100	5,243
40	6,800	6,990
50	8,500	8,738
60	10,200	10,486
70	11,900	12,233
80	13,600	13,980
90	15,300	15,728
100	17,000	17,476
110	18,700	19,223
120	20,400	20,971
133	22,610	23,243

CARGO LOADING TABLE

Weight Lb	Moment / 1000 Forward Hold Arm 680.0	Moment / 1000 Aft Hold Arm 1166.0
6,000		6,966
5,000	3,400	5,830
4,000	2,720	4,664
3,000	2,040	3,498
2,000	1,360	2,332
1,000	680	1,166
900	612	1,049
800	544	933
700	476	816
600	408	700
500	340	583
400	272	466
300	204	350
200	136	233
100	68	117

NOTE: These computations are to be used for testing purposes only.

FUEL LOADING TABLE

TANKS 1 & 3 (EACH)			TANK 2 (3 CELL)					
Weight Lbs.	Arm	Moment / 1000	Weight Lbs.	Arm	Moment / 1000	Weight Lb	Arm	Moment / 1000
8,500	992.1	8,433	8,500	917.5	7,799	22,500	914.5	20,576
9,000	993.0	8,937	9,000	917.2	8,255	23,000	914.5	21,034
9,500	993.9	9,442	9,500	917.0	8,711	23,500	914.4	21,488
10,000	994.7	9,947	10,000	916.8	9,168	24,000	914.3	21,943
10,500	995.4	10,451	10,500	916.6	9,624	24,500	914.3	22,400
11,000	996.1	10,957	11,000	916.5	10,082	25,000	914.2	22,855
11,500	996.8	11,463	11,500	916.3	10,537	25,500	914.2	23,312
12,000	997.5	11,970	12,000	916.1	10,993	26,000	914.1	23,767
FULL CAPACITY			**(See note at lower left)			26,500	914.1	24,244
			18,500	915.1	16,929	27,000	914.0	24,678
			19,000	915.0	17,385	27,500	913.9	25,132
			19,500	914.9	17,841	28,000	913.9	25,589
			20,000	914.9	18,298	28,500	913.8	26,043
			20,500	914.8	18,753	29,000	913.7	26,497
			21,000	914.7	19,209	29,500	913.7	26,954
			21,500	914.6	19,664	30,000	913.6	27,408
			22,000	914.6	20,121	FULL CAPACITY		

**Note:
Computations for Tank 2 weights for 12,500 lbs. to 18,000 lbs. have been purposely omitted.

FIGURE 31.—Loading Tables.

OPERATING CONDITIONS	1	2	3
ORIGINAL WEIGHT	155,000	130,500	100,350
ORIGINAL CG - PERCENT OF MAC	29.5	20.8	24.6
LENGTH OF MAC	164.5	164.5	164.5
LEMAC	TS-39.6	TS-39.6	TS-39.6
WEIGHT REMOVED	7,500	9,600	12,500
LOCATION OF WEIGHT REMOVED	TS+239.5	TS-120	TS-30

NOTE: STA. 527.0=TRIM STA. (TS) 0.0

FIGURE 32.—CG Shift.

OPERATING CONDITIONS	1	2	3
BASIC OPERATING WEIGHT (BOW)	70,500	70,450	69,800
BOW CG - PERCENT OF MAC	25.0	23.5	20.4
CARGO			
COMPT A (TS-299.5)	1,000	3,000	3,000
COMPT B (TS-210)	2,000	4,500	5,500
COMPT C (TS-120)	3,500	5,500	6,500
COMPT D (TS-30)	3,500	6,500	7,500
COMPT E (TS+60)	2,500	6,500	7,000
COMPT F (TS+150)	2,500	6,000	6,500
COMPT G (TS+239.5)	1,000	6,000	6,000
FUEL AVG STA 555.0	30,000	42,000	43,000

NOTE: STA 527.0 = TRM STA (TS) 0.0
MAC 164.5 INCHES, LEMAC 487.4 (TS-39.6)

FIGURE 33.—CG in Percent of MAC.

OPERATING CONDITIONS		1	2	3
ORIGINAL WEIGHT		120,000	115,000	122,500
ORIGINAL CG	%MAC	20.2	28.7	23.2
LENGTH OF MAC	%MAC	164.5	164.5	164.5
LEMAC		TS-39.6	TS-39.6	TS-39.6
WEIGHT ADDED		6,500	12,500	8,500
LOCATION ADDED		TS+239.5	TS-120	TS+150

NOTE: STA. 527.0=TRIM STA. (TS) 0.0

FIGURE 34.—CG Added Weight.

OPERATING CONDITIONS		1	2	3
TAKEOFF WEIGHT		145,000	120,500	150,700
ORIGINAL CG	%MAC	23.5	29.8	28.7
LENGTH OF MAC		164.5	164.5	164.5
LEMAC		TS-39.6	TS-39.6	TS-39.6
WEIGHT MOVED		2,770	4,000	1,700
CARGO LOCATION	FWD	TS-210	TS+150	TS+239.5
	AFT	TS+239.5	TS-120	TS-30

FIGURE 35.—CG Position Change.

OPERATING CONDITIONS		1	2	3
ORIGINAL WEIGHT		116,000	110,000	113,000
ORIGINAL CG	%MAC	31.5	23.2	29.7
LENGTH OF MAC		168.7	168.7	168.7
LEMAC	STA	545.9	545.9	545.9
WEIGHT REMOVED		2,500	3,100	3,800
LOCATION OF WEIGHT REMOVED		885.0	313.0	885.0

FIGURE 36.—CG Position Change.

OPERATING CONDITIONS		1	2	3
BASIC OPERATING WEIGHT	(BOW)	61,310	62,700	59,340
BOW CG	%MAC	24.0	15.5	26.5
PASSENGERS	FWD (STA 300.0)	2,890	1,700	2,550
	AFT (STA 654.0)	12,070	8,500	10,540
CARGO	FWD (STA 313.0)	500	3,800	1,000
	AFT (STA 885.0)	700	1,000	100
FUEL 1 AND 4	(STA 605.7)	7,300 EA	7,370 EA	10,500 EA
FUEL 2 AND 3	(STA 628.4)	7,300 EA	11,122 EA	10,500 EA
MAC	168.7			
LEMAC	545.9			

FIGURE 37.—Loading Conditions.

OPERATING CONDITIONS		1	2	3
ORIGINAL WEIGHT		100,000	102,500	98,700
ORIGINAL CG -	%MAC	13.1	28.7	17.6
LENGTH OF MAC -	STA	168.7	168.7	168.7
LEMAC -	STA	545.9	545.9	545.9
WEIGHT ADDED		3,500	3,650	4,000
LOCATION ADDED -	STA	885.0	313.0	885.0

FIGURE 38.—CG Position Change.

OPERATING CONDITIONS		1	2	3
TAKEOFF WEIGHT		114,000	102,000	108,000
ORIGINAL CG-	%MAC	32.0	20.4	31.5
LENGTH OF MAC		168.7	168.7	168.7
LEMAC		545.9	545.9	545.9
WEIGHT MOVED		1,500	2,400	500
CARGO LOCATIONS	FWD	313.0	313.0	313.0
	AFT	885.0	885.0	885.0

FIGURE 39.—Weight Shift Conditions.

OPERATING CONDITIONS		1	2
BASIC OPERATING WEIGHT (BOW)		58,000	59,100
BOW CG-	%MAC	15.0	11.5
PASSENGERS	FWD (STA 172.0)	1,360	1,190
	AFT (STA 570.0)	9,520	8,500
CARGO	FWD (STA 217.0)	1,500	2,560
	AFT (STA 720.0)	3,350	1,540
FUEL 1 & 4M	(STA 460.0)	4,170 EA	4,170 EA
2 & 3M	(STA 441.0)	3,048 EA	3,048 EA
1 & 4A	(STA 444.0)	1,650 EA	2, 310 EA
2 & 3A	(STA 438.0)	1,632 EA	2,172 EA
MAC	163.6		
LEMAC	395.2		

FIGURE 40.—CG Load Conditions.

OPERATING CONDITIONS		1	2
ORIGINAL WEIGHT		96,000	100,000
ORIGINAL CG-	% MAC	20.5	16.7
LENGTH OF MAC		163.6	163.6
LEMAC-	STA	395.2	395.2
WEIGHT ADDED		3,500	2,500
LOCATION OF WEIGHT ADDED		715.0	715.0

FIGURE 41.—CG Weight Conditions.

OPERATING CONDITIONS		1	2	3
ORIGINAL WEIGHT		103,000	99,800	101,500
ORIGINAL CG -	%MAC	27.6	15.8	32.5
LENGTH OF MAC		163.6	163.6	163.6
LEMAC -	STA	395.2	395.2	395.2
WEIGHT REMOVED		2,600	2,850	4,050
LOCATION OF WEIGHT REMOVED		715.0	185.0	715.0

FIGURE 42.—CG Weight Conditions.

OPERATING CONDITIONS		1	2	3
TAKEOFF WEIGHT		100,500	98,700	89,200
ORIGINAL CG-	%MAC	12.3	32.5	15.6
LENGTH OF MAC		163.6	163.6	163.6
LEMAC		395.2	395.2	395.2
WEIGHT MOVED		750	1,000	940
CARGO LOCATIONS	FWD	185.0	185.0	185.0
	AFT	715.0	715.0	715.0

FIGURE 43.—Weight Removal Conditions.

OPERATING CONDITIONS		1	2	3
TAKEOFF WEIGHT		155,000	133,330	100,100
ORIGINAL CG	% MAC	21.9	31.5	16.5
AFFECTED CG LIMIT	% MAC	23.2	30.0	18.4
CARGO LOCATIONS	FWD TS	-120	-30	-210
	AFT TS	+150	+239.5	+60

MAC 164.5, LEMAC TS -39.6, TS 0=STA 527.0

FIGURE 44.—Cargo Shift.

OPERATING CONDITIONS	1	2	3
BASIC OPERATING WEIGHT	70,500	72,400	69,700
MAXIMUM ZERO FUEL WEIGHT	125,000	126,790	126,790
MAXIMUM LANDING WEIGHT	130,000	135,000	135,000
MAXIMUM TAKEOFF WEIGHT	155,000	155,000	155,000
FUEL TANK LOAD	60,500	41,610	35,300
ESTIMATED FUEL BURN	41,200	20,440	15,910

FIGURE 45.—Maximum Payload.

OPERATING CONDITIONS (4 ENG)		1	2	3
GROSS WEIGHT	LB	140,000	115,000	145,000
PRESSURE ALTITUDE	FT	16,000	20,000	5,000
AMBIENT TEMPERATURE	°C	-32	-5	+20
CRUISE TIME	HR	4.0	3.5	2.5

FIGURE 46.—Cruise Weight Change.

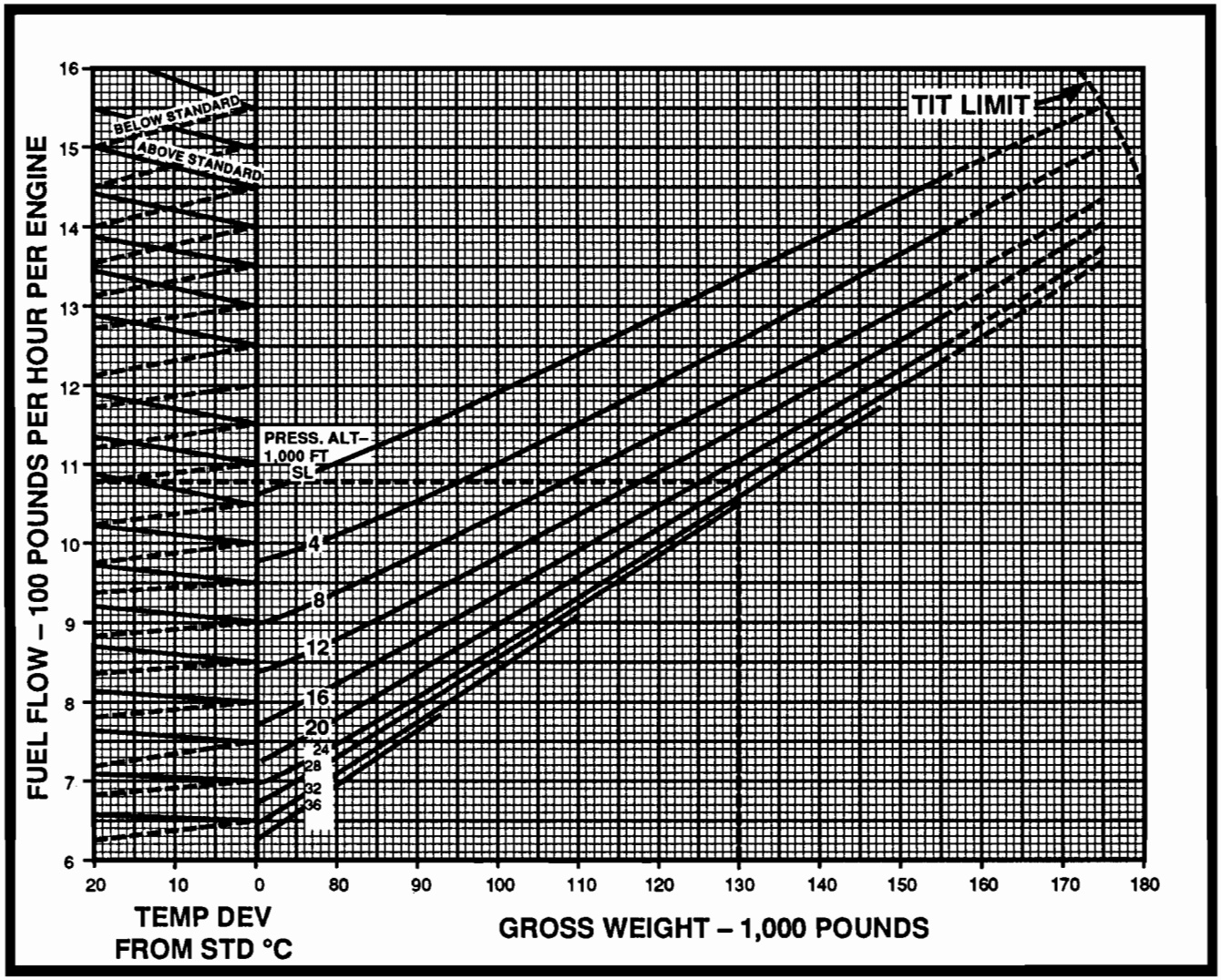

FIGURE 47.—Gross Weight Table.

OPERATING CONDITIONS		1	2	3
TAKEOFF WEIGHT		113,000	106,000	110,500
ORIGINAL CG -	%MAC	20.5	33.5	19.9
LENGTH OF MAC		168.7	168.7	168.7
LEMAC		545.9	545.9	545.9
AFFECTED CG LIMIT	%MAC	22.0	32.0	21.8
CARGO LOCATIONS	FWD	313.0	313.0	313.0
	AFT	885.0	885.0	885.0

FIGURE 48.—Cargo Shift Conditions.

OPERATING CONDITIONS	1	2	3
BASIC OPERATING WEIGHT	61,300	59,350	63,800
MAXIMUM ZERO FUEL WEIGHT	86,000	82,500	86,000
MAXIMUM LANDING WEIGHT	95,650	95,650	95,600
MAXIMUM TAKEOFF WEIGHT	116,000	113,000	116,000
FUEL TANK LOAD	36,000	33,100	38,500
ESTIMATED FUEL BURN	27,900	10,750	20,800

FIGURE 49.—Maximum Payload Conditions.

OPERATING CONDITIONS		1	2	3
CRUISE ALTITUDE	FT	19,000	17,000	23,000
AMBIENT TEMPERATURE	°C	-13	-19	-41
WEIGHT START CRUISE	LB	105,000	110,000	115,000
CRUISE TIME	HR	3.5	3.5	2.5
DESCENT AND LANDING FUEL BURN	LB	1,350	1,200	1,550

FIGURE 50.—Landing Weight Conditions.

STD.+10 °C

GROSS WEIGHT - POUNDS	PRESS ALT-1000 FT 25	23	21	19	17	15	13	11	9	7	5	3
115,000				321	323	324	325	324	323	322	320	319
				4210	4440	4690	4930	5170	5410	5660	5920	6170
110,000			322	324	326	326	327	326	325	324	322	320
			3990	4220	4460	4700	4950	5180	5420	5680	5930	6180
105,000			325	327	328	329	328	328	327	325	323	321
			4000	4230	4470	4710	4960	5190	5440	5690	5940	6190
100,000		327	329	330	331	331	330	329	328	326	324	322
		3780	4010	4240	4480	4720	4970	5200	5450	5700	5950	6200
95,000	328	330	331	332	333	332	332	331	329	327	325	323
	3580	3790	4020	4250	4490	4730	4970	5200	5450	5710	5960	6200
90,000	332	333	334	335	335	334	333	332	330	328	326	324
	3590	3800	4020	4250	4490	4730	4970	5210	5460	5710	5960	6210
85,000	335	336	337	337	337	336	335	333	331	329	327	325
	3600	3800	4030	4250	4500	4730	4980	5220	5470	5720	5970	6210
80,000 *	338	339	339	339	338	337	336	334	332	330	328	325
**	3600	3800	4030	4260	4500	4740	4980	5220	5470	5730	5970	6220

STD. DAY

GROSS WEIGHT - POUNDS	PRESS ALT-1000 FT 25	23	21	19	17	15	13	11	9	7	5	3
115,000			331	333	335	335	336	335	333	332	331	329
			4280	4430	4800	5050	5320	5590	5850	6100	6400	6690
110,000		331	334	336	337	337	337	336	335	334	332	330
		4060	4290	4540	4800	5050	5320	5600	5870	6110	6410	6700
105,000	331	335	337	338	339	339	339	338	336	335	333	331
	3840	4070	4290	4540	4810	5060	5330	5600	5880	6120	6420	6710
100,000	335	338	340	340	341	341	340	339	338	336	334	332
	3850	4080	4300	4550	4810	5070	5330	5610	5890	6130	6430	6710
95,000	339	341	342	342	343	342	341	340	338	337	335	333
	3850	4080	4310	4550	4820	5070	5340	5610	5890	6140	6440	6720
90,000	342	343	344	344	344	343	342	341	340	338	336	333
	3860	4090	4320	4560	4820	5080	5340	5620	5900	6150	6450	6730
85,000	344	345	346	346	346	345	343	342	340	339	336	334
	3870	4090	4320	4570	4830	45080	5350	5620	5910	6150	6450	6740
80,000 *	348	348	348	348	347	346	345	343	341	339	337	335
**	3880	4100	4330	4570	4830	5090	5350	5630	5910	6160	6460	6740

STD.-10 °C

GROSS WEIGHT - POUNDS	PRESS ALT-1000 FT 25	23	21	19	17	15	13	11	9	7	5	3
115,000		338	341	343	344	344	344	343	343	342	340	333
		4340	4620	4890	5170	5450	5740	6030	6320	6620	6920	7030
110,000	338	341	344	345	346	346	346	345	344	343	341	333
	4070	4350	4630	4900	5180	5460	5750	6040	6330	6630	6930	7000
105,000	342	345	346	347	347	347	347	346	345	344	342	333
	4080	4360	4640	4910	5190	5470	5760	6050	6340	6640	6940	6980
100,000	345	347	349	349	349	349	348	347	346	345	343	333
	4090	4370	4650	4920	5200	5480	5770	6060	6340	6640	6940	6960
95,000	348	350	351	351	351	350	350	348	347	346	343	333
	4100	4380	4650	4920	5210	5480	5770	6060	6350	6650	6920	6940
90,000	350	352	353	353	352	352	351	335	348	347	343	333
	4110	4380	4660	4930	5210	5490	5780	6060	6350	6650	6900	6930
85,000	353	354	355	355	354	353	352	350	349	347	343	333
	4120	4380	4660	4930	5220	5500	5780	6060	6360	6660	6880	6910
80,000 *	355	356	356	356	355	354	353	351	350	348	343	333
**	4120	4390	4660	4930	5220	5500	5780	6060	6360	6660	6870	6900

*True Airspeed - Knots
**Four Engine Fuel Flow - lb/hr

FIGURE 51.—Cruise Chart.

OPERATING CONDITIONS	1	2	3
BASIC OPERATING WEIGHT	58,000	57,700	58,750
MAXIMUM ZERO FUEL WEIGHT	83,200	83,200	83,200
MAXIMUM LANDING WEIGHT	88,200	88,200	88,200
MAXIMUM TAKEOFF WEIGHT	103,000	103,000	103,000
FUEL TANK LOAD	23,500	19,200	17,000
ESTIMATED FUEL BURN	17,625	16,700	8,050

FIGURE 52.—Maximum Payload Conditions.

OPERATING CONDITIONS		1	2	3
TAKEOFF WEIGHT		103,000	98,200	88,200
ORIGINAL CG	% MAC	10.4	34.5	9.5
AFFECTED CG LIMIT	% MAC	11.0	33.0	11.0

MAC 163.6, LEMAC 395.2, FWD CARGO 185.0, AFT CARGO 715.0

FIGURE 53.—Cargo Shift Conditions.