U.S. Department of Transportation
Federal Aviation Administration

Advisory Circular

Subject: FLAMMABILITY REQUIREMENTS FOR AIRCRAFT SEAT CUSHIONS
Date: 9/17/86
Initiated by: ANM-110
AC No: 25.853-1
Change:

1. PURPOSE. This Advisory Circular (AC) provides guidance material for demonstrating compliance with the Federal Aviation Regulations (FAR) pertaining to flammability of aircraft seat cushions. This AC also defines certain terms used in the FAR, in the context of these requirements.

2. RELATED FAR SECTIONS.

a. Section 25.853 of Part 25 of the FAR - Compartment Interiors.

b. Appendix F--Part II, of Part 25 of the FAR - Flammability of Seat Cushions.

c. Section 29.853 of Part 29 of the FAR - Compartment Interiors.

d. Section 121.312 of Part 121 of the FAR - Materials for Compartment Interiors.

e. Section 135.169 of Part 135 of the FAR - Additional Airworthiness Requirements.

3. BACKGROUND.

a. On October 23, 1984, the Federal Aviation Administration (FAA) issued Amendments 25-59, 29-23, and 121-184 which became effective November 26, 1984. These amendments are part of the FAA's continuing efforts to upgrade aircraft cabin safety and improve occupant survivability in aircraft accidents. They require that seat cushions installed on transport category airplanes and rotorcraft meet improved flammability standards.

b. Amendments 25-59, 29-23, and 121-184 were issued to require that new type design transport category airplanes and rotorcraft, as well as aircraft in air carrier operation under Part 121 and large airplanes operated under Part 135, be equipped with seat cushions providing a high degree of fire-resistance. Affected operators are required to comply with these amendments after November 26, 1987.

4. OBJECTIVE OF THE RULE.

a. Full-scale and laboratory fire testing conducted by the FAA has demonstrated that the involvement of the relatively large mass of foam

cushion material in aircraft is a major factor in a cabin fire. Thermal radiation can penetrate the seat's outer upholstery covering and cause ignition of the foam core. Due to the quantity of foam material used in aircraft, this potential fuel source can cause a fire to spread throughout the cabin and produce large amounts of smoke and toxic gas emissions.

b. One concept for retarding the involvement of seat cushion foam in a cabin fire is the fireblocking layer. This concept involves the use of a thin layer of highly fire-resistant material to encapsulate the foam mass and protect it from external fire sources. Research and development by the FAA confirmed the viability of the blocking layer concept and produced a new test method to ensure adequate fire protection is provided for particular seat cushion configurations. The new test method utilizes a two gallon per hour oil burner operating at temperatures and heat flux levels representative of a cabin fire. Seat cushions which pass this test provide substantially improved fire safety in aircraft cabins.

5. DISCUSSION OF TERMS USED IN PART 25, APPENDIX F--PART II.

a. Back Cushion Specimen. The back cushion specimen, as referred to in paragraph (a)(1), means the cushion specimen in the vertical orientation. This specimen may be representative of either the production seat back or seat bottom (or both, if the production articles have the same construction). This specimen is hereafter referred to as "the vertical specimen."

b. Bottom Cushion Specimen. The bottom cushion specimen, as referred to in paragraph (a)(1), means the cushion specimen in the horizontal orientation. This specimen may be representative of either the production seat back or seat bottom (or both, if the production articles have the same construction). This specimen is hereafter referred to as "the horizontal specimen."

c. Specimen Set. As used in paragraph (a)(1), a specimen set consists of one vertical specimen and one horizontal specimen. Both specimens represent the same production cushion construction; that is, both specimens in the specimen set have identical construction and materials, proportioned to correspond to the specimen size (see figure 1).

d. Similar Dress Covering.

(1) Similar, as used in paragraph (a)(3), refers to dress covering materials having the same material composition, weave style, and weight. Material blends may be considered similar when the constituent materials' fractions are the same, ±6 percent, as the tested material. Examples of different weave styles include: plain, jacquard, or velvet. With regard to weight, lighter fabrics are generally more critical than heavier fabrics. Due to the severe shrinking and unpredictable distortion experienced by leather dress cover materials, similarity approvals for leather are not recommended.

(2) Certification by similarity to previously tested dress covers should be limited to instances where the material composition is the same, and the weight and weave type are essentially the same. In all cases, results of the bunsen burner test per § 25.853(b) for the new material should be equal to or better with respect to burn length than the tested material. In addition, it may be useful to evaluate the weight loss and burn length results of the oil burner test to determine if the tested material is a good basis for similarity; that is, the closer weight loss and burn length with the oil burner are to the maximum allowed, the more alike the dress covering materials should be for similarity. In general, test data and resultant experience gained from conducting tests will also be a major source of information to determine if approval by similarity is acceptable.

6. DEMONSTRATING COMPLIANCE WITH THE REGULATIONS.

a. Test Apparatus. The test apparatus is described in Part 25, Appendix F--Part II, including oil burner, mounting stand, calorimeter, thermocouples, etc., and is specified to the degree necessary to yield reproducible test results. Use of an alternate calorimeter or thermocouples can result in different calibration measurements and, consequently, different test results. Mislocating the drip pan or aluminum foil influences the amount of heat radiated to the test specimen by drippings and can also affect test results. The drip pan should be located at the bottom of the mounting stand legs, 12±1/8 inch below the horizontal specimen holder. In general, deviations from the specifications of Appendix F--Part II will influence the accuracy of the test. The apparatus specified in Appendix F should be adhered to as closely as possible. Permissible deviations are as follows.

(1) Burner. Minor deviations to the fuel nozzle spray angle, fuel pressure, or other similar parameters can be accepted if the nominal fuel flow rate and temperature and heat flux measurements conform to the requirements of Appendix F. Major deviations, for example a different burner type, would require thorough comparison testing with a burner that meets FAA specifications. Temperature and heat flux measurements, as well as test results, would have to correspond to those produced by an FAA approved burner that meets the specifications of Appendix F. An alternate burner should always be compared with an approved burner that meets the Appendix F requirements, and not against other alternate burners. The amount of comparison testing required would be dependent on the degree of departure from the specifications and should always include more than one material combination. Flame characteristics can be enhanced by optional use of tabs, as described in Power Plant Engineering Report No. 3A, dated March 1978, and Report No. DOT/FAA/RD/76/213, Reevaluation of Burner Characteristics for Fire Resistance Tests, dated January 1977.

(2) Fuel.

(i) Fuels such as #1 kerosene, fuel oil, or #2 diesel, can be considered equivalent to the fuel specified, if the nominal fuel flow rate, flame temperature, and heat flux conform to the requirements of Appendix F.

Use of a different fuel (e.g., propane gas) would require comparison testing with a burner using #2 kerosene or equivalent, and should include tests on more than one material combination as noted in paragraph (1) above for burner comparison testing.

(ii) Fuel temperature is not specified in Appendix F; however, if fuel temperature is allowed to vary, care must be taken to ensure that the fuel flow rate is maintained at the correct value. Variations in temperature can cause calibration parameters to change (i.e. fuel flow rate decreases with increasing temperature) and can produce essentially different test results.

(3) Thermocouples. Experience has shown that 1/16-inch thermocouples may provide more accurate calibration than 1/8-inch thermocouples; the 1/16-inch thermocouples are therefore recommended.

b. Test Specimens. The primary purpose of the improved flammability test for aircraft seat cushions is to evaluate the tendency for the seat materials to cause a fire to spread throughout the cabin. As the test specimen mounting is configured to look like an aircraft seat, it might be expected that the test specimens should simulate the production article in as many ways as possible. However, it should be noted that as with any qualification test, the oil burner test is not intended to represent all possible in-service scenarios. An actual cabin fire might impinge upon a seat from any direction, so all sides of the seat cushions should be protected to the same standard. The following are guidelines for the construction of test specimens.

(1) The method of fabricating blocking layer seams and closures should duplicate the production method and should be evaluated for possible weakness if exposed to a fire. This may require configuring a test specimen so that the seam is exposed to the test burner, even though a seam may not be located in the same place on a production cushion. Tests with seams in this orientation may yield results which can be used to predict the vulnerability of seams in a given configuration.

(2) Seats which utilize multiple varieties of foam where the percentage of the foam components varies from model to model require substantiation for each foam combination. One way to substantiate each combination is to test each one. However, foam combinations may be substantiated by running tests which envelope the quantity of each foam component to be approved. For example, if Foam "A" makes up 80 percent of the specimen volume in one series of specimen sets and 50 percent in another, with Foam "B" comprising the remainder in each case, all combinations of Foams "A" and "B" between those limits could be approved based on the previous test results. In addition, test data gathered to date has yielded predictable behavior of foam when all other elements of the test sample are the same. For foams of a given chemical composition, low density foam may be used to qualify foams of higher density. In this case, as in the case of foam combinations, all other elements that make up the cushion should be the same.

(3) Since the test specimen sizes required by Appendix F do not generally correspond in size or shape to production articles, the test specimens are fabricated separately; usually from bulk material supply. In some cases, however, it may be possible to fabricate test specimens by combining two or more production articles. If the production article includes bonded foam parts, the same bonding agent should be used to bond the test specimen together. It is not necessary to bond two (or more) identical foams together to fabricate a test specimen if the production article does not include bonding. Care must be taken to maintain the correct percentage by volume of cushion components if specimens are fabricated this way.

(4) The test specimens are intended to represent the principal material elements and construction methods of the production seat cushion. Therefore, items such as buttons or detail stitching (logos) which are decorative in nature, and hand-hold straps or velcro attach strips that do not penetrate the blocking layer, need not be included in test specimens. Thin padding such as that used on armrests or filler around food trays is also unnecessary for test specimens and does not require fire blocking. Layers of padding or filler immediately under the dress cover material are considered to be part of the dress cover material and should be included in the test specimens.

(5) Foam headrest and footrest cushions should be treated the same as bottom and back cushions and tested as complete specimen sets if their construction is different from the seat bottom and/or seat back cushions. In some cases, it may be reasonable to include the headrest as part of the seat back specimen set. In such a case, the specimens should be constructed as for foam combinations.

(6) If more than one blocking layer material is used on a given cushion, specimen sets must be tested with each blocking layer completely encapsulating the specimens so that all blocking layers are subjected to the same level of test severity. Blocking layers are not used in combination for tests (see figure 1). Aluminum seat pans, etc., of the thickness usually found in service have not been shown to provide adequate protection.

(7) Some installations may result in blocking layer or dress cover material covering metal seat pans, metal structure, or other items not associated with the cushion construction. If these items are included in the specimens, their weight should not be included in the specimen weight since they are not part of the cushion construction.

(8) Production seats which use more than one dress cover material may be substantiated in one of two ways:

(i) One specimen set for each dress cover material may be tested. This method would allow the use of each material in combination with other materials that have passed the test.

(ii) Alternatively, the test may be run with all dress cover materials. Each material should be equally exposed to the test burner (see figure 2).

NOTE: If the dress cover(s) is used to enhance the fireblocking effect, seams, etc., should be treated as described in paragraph 6b(1) of this AC.

(9) Specimen dimensions specified in Part 25, Appendix F--Part II, paragraph (c), are final assembled dimensions including fireblocking layer and dress cover. Specimens that are over- or under-sized will cause burner impingement to be biased to either the bottom or the top surface of the horizontal specimen and can influence test results.

FIGURE 1

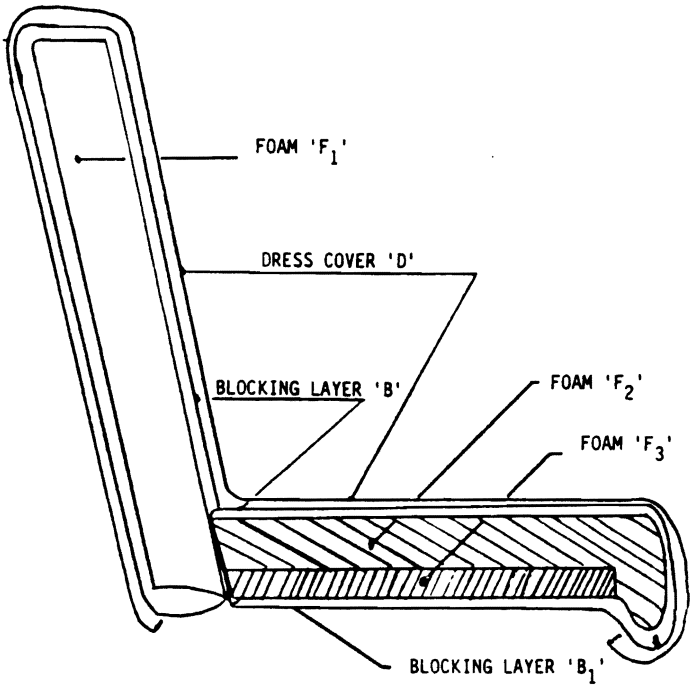

PRODUCTION SEAT CONFIGURATION
(Blocking layer 'B_1' used on Bottom Surface of Seat Bottom Cushion.)

SPECIMEN SET TO SUBSTANTIATE SEAT BOTTOM CUSHION (3 sets required) WITH BLOCKING LAYER 'B'.

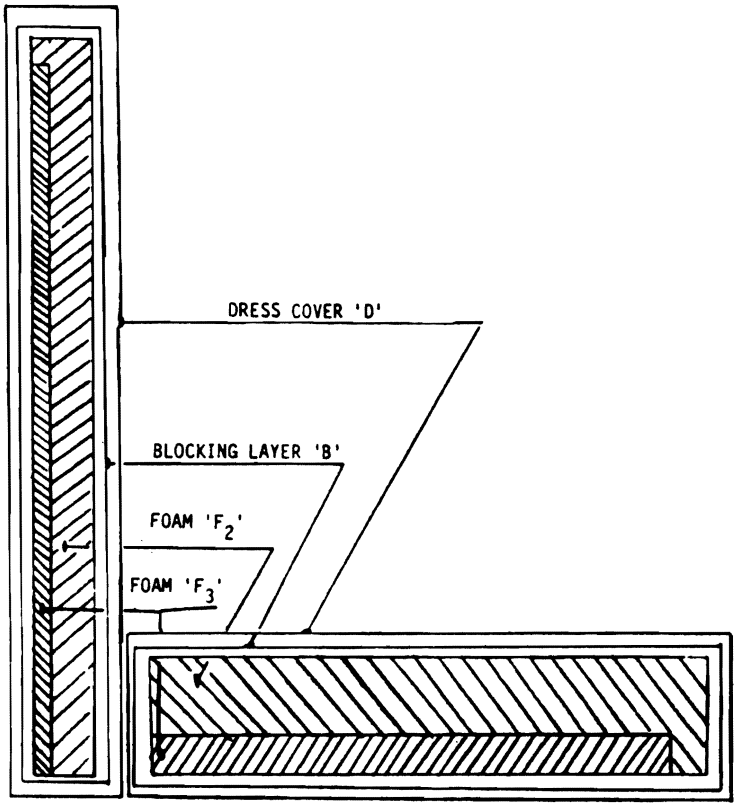

FIGURE 1. cont.

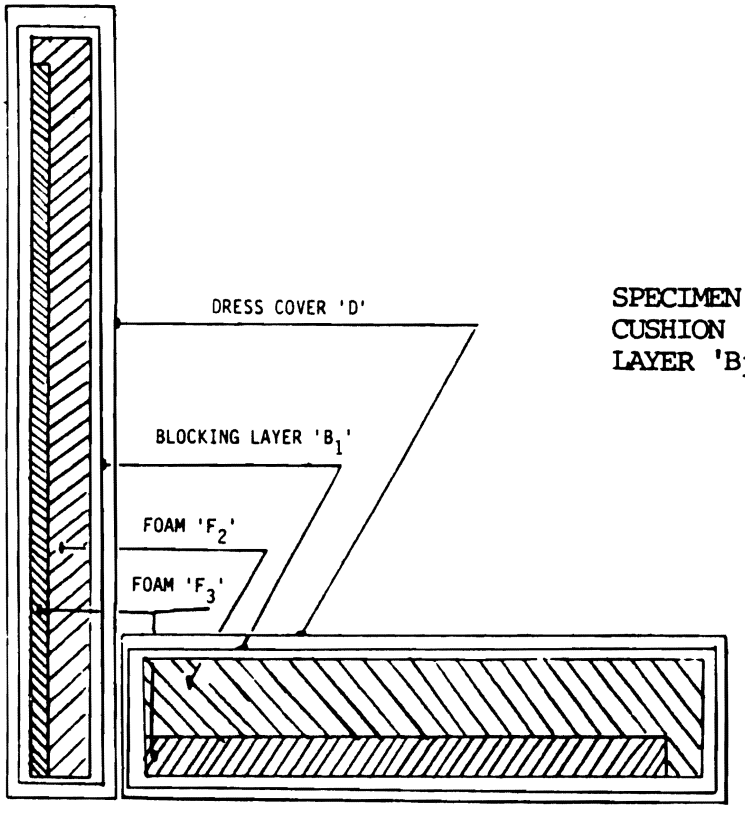

SPECIMEN SET TO SUBSTANTIATE SEAT BOTTOM CUSHION (3 sets required) WITH BLOCKING LAYER 'B_1'

SPECIMEN SET TO SUBSTANTIATE SEAT BACK CUSHION (3 sets required)

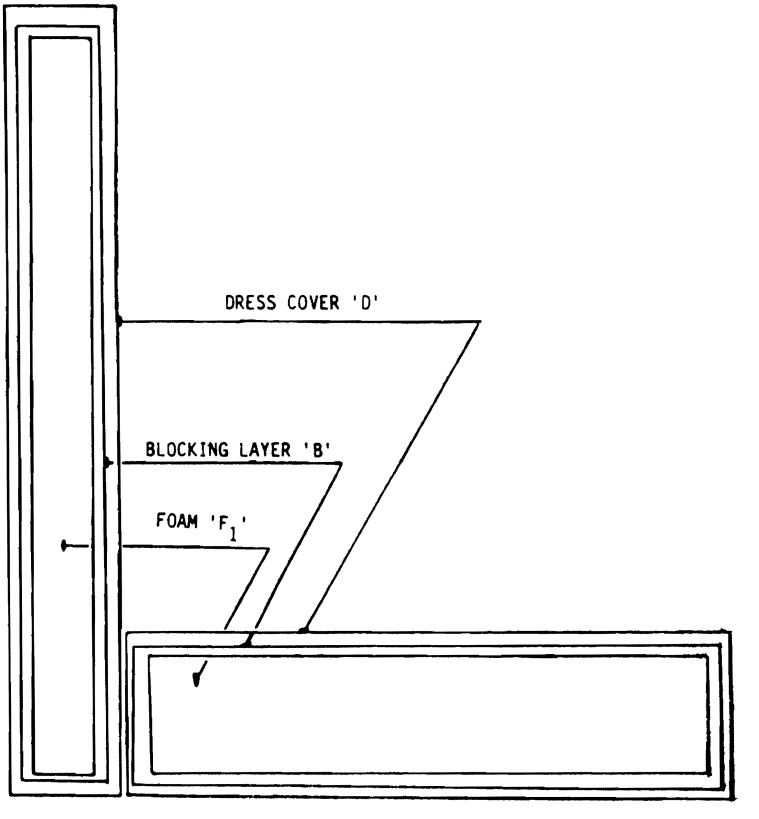

FIGURE 2

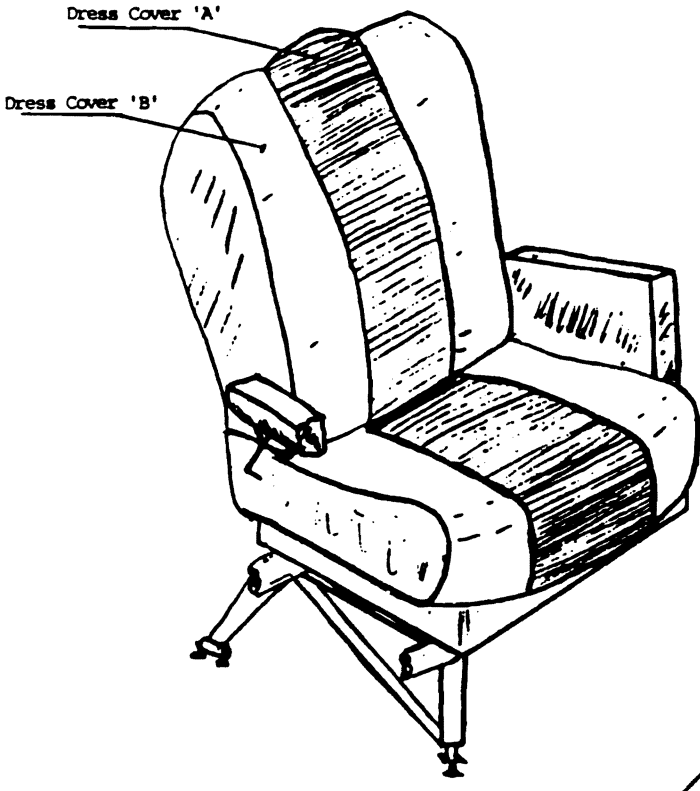

EXAMPLE PRODUCTION SEAT USING TWO DRESS COVER MATERIALS

SPECIMEN SET TO QUALIFY TWO DRESS COVER MATERIALS IN COMBINATION

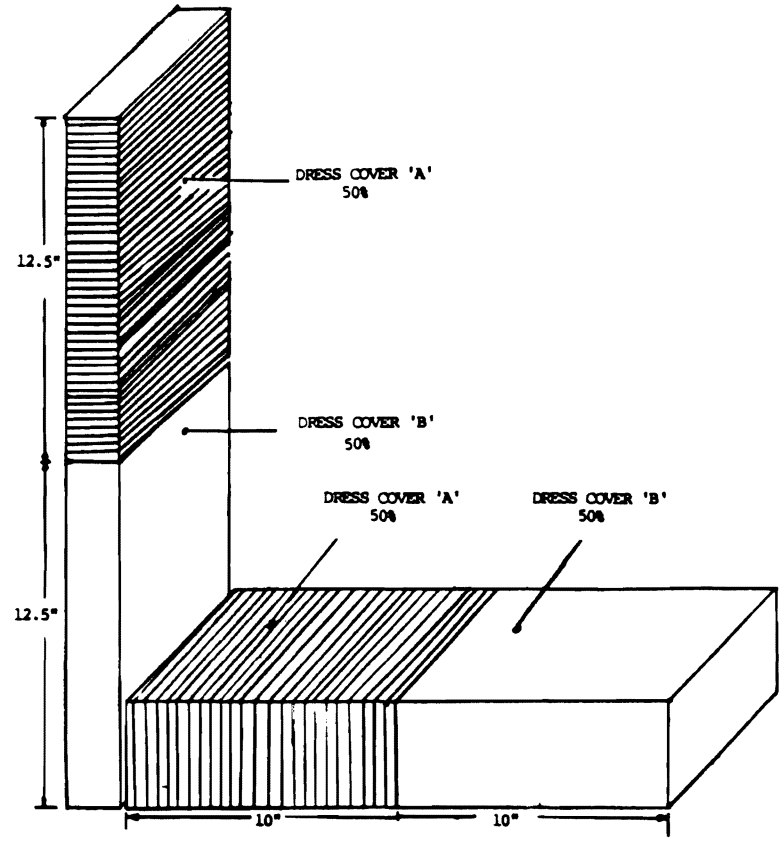

c. Pass/Fail Criteria.

(1) Each set of three specimen sets must pass the weight loss and burn length criteria independently of other specimen sets. That is, each production seat component (seat bottom, seat back, foot rest, head rest, etc.) should pass; results may not be extended from one component specimen set to another.

(2) The burn length criteria as noted in Part 25, Appendix F--Part II, paragraph (a)(4), refers to 2/3 of the specimen sets. On at least two of the sets, burn length may not exceed 17 inches. A burn length of greater than 17 inches is considered to have reached the side of the cushion opposite the burner. Burn length is recorded on the longest burn on any specimen surface. This is typically on the top of the horizontal specimen or the front of the vertical specimen. Because some specimens may shrink during the test, it may be useful to mark the 17-inch dimension on the specimen prior to test.

(3) Specimen weight at the conclusion of the test is recorded after the specimens have been extinguished (if extinguishment is required). However, where continuous weighing systems are used, it would be acceptable to record the final specimen weight while the specimen is still burning if testing shows that this method does not influence the test results. As noted in Part 25, Appendix F--Part II, the extinguisher used should be a gaseous type to avoid adding weight to the specimen. If a continuous weighing system is used, drippings which remain attached to the frame may be included in the final weight. If the specimens are removed for weighing, pieces that remain attached to the frame may also be included; however, care should be taken to avoid including extraneous material.

d. Conduct of the Test. The ability to demonstrate repeatable test results for a given facility depends primarily on maintaining the test apparatus in its original condition. Thermocouples, calorimeters, weighing devices, and other instruments used in measuring test parameters should be calibrated regularly. Annual calibration (or more frequent if recommended by the manufacturer) is suggested. The following areas where discrepancies are likely to occur should be periodically monitored and corrected as needed.

(1) Burner Cone Distortion. The burner cone will distort somewhat upon initial use. The distortion is not usually significant and should not adversely affect test results. However, if calibration measurements should start to change, the cone should be examined for distortion and returned to the specified shape, if necessary. If the burner cone/draft tube is cantilevered from the burner motor, the cone/tube should be periodically checked to ensure the centerline is level. An additional brace may be required. An out-of-level burner can bias the flame to one specimen surface and adversely influence test results.

(2) Burner Cleaning. Products of combustion (soot, etc.), can build up inside the burner cone. As above, calibration measurements should be monitored and the burner cleaned if needed. In addition, changes in

flame length, shape, and color are indicators that the burner might need cleaning. A regular cleaning interval is recommended to avoid problems in this area.

(3) Calorimeter Alignment. As noted in Part 25, Appendix F--Part II, the insulation block can crumble causing misalignment of the calorimeter which can, in turn, result in faulty calibration. The calorimeter should be shimmed when necessary to ensure proper alignment.

e. Sections 25.853(c) and 29.853(b) of the FAR except flight crewmember seats from these requirements. This refers to required flightcrew seats in the cockpit only; observer seats, flight attendant seats, and any other seats are required to pass the test criteria of Part 25, Appendix F--Part II. Berths are also excepted from these requirements if they are used exclusively as berths. Berths that are convertible to seats must be tested.

f. Approval Process. A Supplemental Type Certificate is not necessary to gain FAA approval of cushion assemblies which meet the standards of Part 25, Appendix F--Part II; a letter of FAA engineering approval is considered adequate. When authorized by the cognizant FAA Aircraft Certification Office, Designated Engineering Representatives may also grant FAA approval on FAA Form 8110-3. Cushion assembly part numbers should be changed where appropriate to reflect the addition of fireblocking material. If a change to the cushion assembly part number is not applicable, some other means of maintaining configuration control may be used. Letters of approval (or FAA Form 8110-3) will be specific as to applicable cushion assembly part numbers and will reflect any limitations in material or modification procedures. Note that engineering approval of a configuration is not an authorization to produce parts. Changes in dress covering will require resubstantiation either by retest or by the provisions of similarity allowed in the regulation. Approval should therefore indicate the specific dress cover approved, either explicitly or by incorporation into the cushion part number.

Darrell M Pederson

DARRELL M. PEDERSON
Acting Manager, Aircraft Certification Division