ORDER

6160.12

PROJECT IMPLEMENTATION PLAN

INITIAL SECTOR SUITE SYSTEM

December 27, 1991

DEPARTMENT OF TRANSPORTATION
FEDERAL AVIATION ADMINISTRATION

Distribution: A-W (BU/MS/LR/NA/NR/NC) -1; A-W (AP) -3; A-Z (CN/CD) -2; A-W (LG/NS/SM/RD/PM/TR/SE/HR/HT) -2; A-X (AF/AT/LG/RM) -2; A-Y (AY/DE/FA) -2; A-FAF-3 (LTD)(2 cys ea.); A-FAT-1 (LTD)(2 cys ea.).

Initiated By: AAP-240

RECORD OF CHANGES

DIRECTIVE NO. **6160.12**

CHANGE TO BASIC	SUPPLEMENT			OPTIONAL	CHANGE TO BASIC	SUPPLEMENTS			OPTIONAL

FOREWORD

This order transmits the project implementation plan for the Initial Sector Suite System segment of the Advanced Automation System (AAS). It provides guidance for the orderly implementation of the Initial Sector Suite System at the 20 air route traffic control centers within the continental United States. This document has been written in compliance with FAA-STD-036, Preparation of Project Implementation Plans. This order establishes the plan for program management of project implementation, and responsibilities governing the required activities to ensure that the Initial Sector Suite System is properly introduced into the National Airspace System. It is addressed to all personnel involved in the AAS implementation at the 20 air route traffic control centers within the continental United States.

Michael E. Perie
Program Manager for Advanced Automation

Page Number

20.2.1 Site Preparation 2-4
20.2.2 Equipment Installation/Checkout, Integration and Test 2-4
20.2.3 Operational Transition 2-4
20.2.4 Post Transition Operation 2-4

21. PURPOSE 2-4

22. HISTORY 2-4
Fig. 22-1 Major AAS Program Milestones 2-5

23.-29. RESERVED 2-5

CHAPTER 3. PROJECT DESCRIPTION 3-1

30. SYSTEM DESCRIPTION 3-1
30.1 En Route ATC Automation System 3-1
Fig. 30-1 Major Systems of the En Route ATC System 3-1
30.1.1 Initial Sector Suite System 3-1
Fig. 30-2 Relationship of Functional Elements 3-1
Fig. 30-3 ISSS Functional Description Organization 3-1
Fig. 30-4 ISSS Data Communication Configuration 3-2
Fig. 30-5 IBM Multiple-bridge Local Area Network 3-3
30.1.1.1 Data Display 3-3
30.1.1.1.1 Situation Display 3-3
30.1.1.1.1.1 Geographic Area of Concern 3-4
Fig. 30-6 Controller and Supervisory Position Logical Displays . 3-4
30.1.1.1.1.2 Target and Track Data and Symbology 3-4
30.1.1.1.1.3 Track Vector 3-5
30.1.1.1.1.4 Route Display 3-5
30.1.1.1.1.5 Longitudinal Scale 3-5
30.1.1.1.1.6 Aircraft Halo 3-5
30.1.1.1.1.7 DARC Display 3-5
30.1.1.1.2 Flight Data Display 3-5
Fig. 30-7 FDE Fields and Symbol Spaces 3-5
30.1.1.1.2.1 Managing Flight Data Entries. 3-5
30.1.1.1.2.1.1 Posting 3-6
30.1.1.1.2.1.2 Ordering 3-6
30.1.1.1.2.1.3 Suppression 3-6
30.1.1.1.2.1.4 Deletion 3-6
30.1.1.1.2.1.5 Updating 3-6
30.1.1.1.2.2 Annotating Flight Data Entries 3-6
30.1.1.1.3 Aeronautical and Meteorological Display 3-8
Fig. 30-8 A&M Data Fields 3-8
30.1.1.1.4 Special Lists Display 3-8
30.1.1.1.5 Message Composition and Response Display 3-8
30.1.1.1.6 Static Information Display 3-8
30.1.1.1.7 Controller Notepad Display 3-9
30.1.1.1.8 Suppressed Display List Display 3-9
30.1.1.1.9 Alert and Resolution Display 3-9
30.1.1.1.10 Traffic Management Situation Display 3-9
30.1.1.1.11 Traffic Management Flight Data Display 3-9
30.1.1.1.12 Traffic Management Coordinator Display 3-9
30.1.1.2 Data Entry 3-9
30.1.1.2.1 Supervisory and Maintenance Consoles 3-9

Page Number

30.1.1.2.2 Detached Console Training 3-10
30.1.1.2.3 En Route Control Position 3-10
30.1.1.2.3.1 One-Person Operation 3-10
30.1.1.2.3.2 Two- and Three-Person Operation 3-10
30.1.1.3 Sustaining System Operations 3-11
30.1.1.3.1 Resource Allocation and Control 3-11
Fig. 30-9 Subdivisions of Sustaining Systems Operations 3-11
30.1.1.3.1.1 Scheduling Processes 3-11
30.1.1.3.1.2 Control and Allocation of Storage 3-11
30.1.1.3.1.3 Control of Data Base 3-11
30.1.1.3.1.4 Control and Allocation of Peripheral Devices 3-11
30.1.1.3.2 Communications 3-11
30.1.1.3.2.1 Execution of Input/Output Communications 3-11
30.1.1.3.2.2 Communications Error Recovery 3-11
30.1.1.3.3 System Integrity 3-11
Fig. 30-10 Major Functional Areas of System Integrity 3-11
30.1.1.3.3.1 Transition 3-11
30.1.1.3.3.2 Fallback Capability 3-12
30.1.1.3.3.3 Autonomous Operation 3-12
30.1.1.3.3.4 Host Startup and Startover 3-12
30.1.1.3.3.5 Initialization of System Operations 3-12
30.1.1.3.3.6 Monitoring Performance 3-12
30.1.1.3.3.7 Detection of Failures 3-12
30.1.1.3.3.8 Automatic Reconfiguration 3-12
30.1.1.3.3.9 Manual Reconfiguration 3-12
30.1.1.3.3.10 Performance of Manual Tests and Certification . . 3-12
30.1.1.3.3.11 Performance of Periodic Tests 3-13
30.1.1.3.3.12 System Security 3-13
30.1.1.3.3.13 The Monitor and Control Position 3-13
30.1.1.3.3.14 Recording Data 3-13
30.1.1.3.3.14.1 ISSS Recording Control Features 3-13
30.1.1.3.3.14.2 Host and DARC Data Recording 3-13
30.1.1.3.3.15 Reduction and Analysis of System Data 3-13
30.1.1.3.4 Message Generation 3-14
30.1.1.3.5 Input Message Processing 3-14
30.1.1.3.6 Sign-On Sign-Off Processing 3-14
30.1.1.3.7 Display Preference Set Processing 3-14
30.1.1.4 Display Recording and Playback 3-15
30.1.2 DARC 3-15
30.1.2.1 DARC/NAS 3-15
Fig. 30-11 DARC Relationship to Host 3-15
30.1.2.2 DARC-Only Mode 3-15
30.2 Equipment Configurations 3-15
30.2.1 Autonomous Operation 3-15
30.2.1.1 Basic Autonomous Operation 3-16
30.2.1.2 Full Autonomous Operation 3-16
30.2.1.2.1 Sector-to-Sector Communications 3-16
30.2.1.2.2 Data Recording 3-16

31. PHYSICAL DESCRIPTION. 3-16
Fig. 31-1 ISSS Physical Characteristics 3-16
31.1 Common Console 3-16
31.1.1 Common Console Footprint 3-16
31.1.2 Composition of Common Console 3-16
31.1.2.1 Main Display Monitor 3-16

Page Number

31.1.2.2 Auxiliary Display Monitor 3-16
31.1.2.3 Main Display Controller 3-17
31.1.2.4 CC Processor 3-17
Fig. 31-2 Common Console Front and Rear Views 3-17
Fig. 31-3 Common Console Footprint 3-18
Fig. 31-4 Common Console Units 3-18
31.1.2.5 Power Distribution Unit 3-19
Fig. 31-5 Common Console Block Diagram 3-18
31.1.2.6 VSCS Elements 3-19
31.1.2.7 Keyboard 3-19
31.1.2.8 Cursor Positioning Selection Device 3-19
31.1.2.9 CC Structure 3-19
31.2 Back Room Equipment 3-19
31.2.1 Communication Network Group 3-19
31.2.1.1 LCN 3-19
Fig. 31-6 LCN Bridge Model 3-19
31.2.1.2 LCN Interface Unit 3-19
31.2.1.3 HCS Interface Unit 3-19
31.2.1.4 BCN 3-20
31.2.2 ESI Group 3-20
31.2.3 Central Cluster Group 3-20
31.2.3.1 Processor 3-20
31.2.3.2 Direct Access Storage 3-20
31.2.3.3 Magnetic Tape Units 3-20

Fig. 31-7 LCN Interface Unit Model 3-20
31.2.3.4 Printer 3-20
31.2.3.5 Subsystem Control Unit 3-20
31.2.3.6 System Console 3-20
31.2.3.7 Color Display Station 3-20
31.2.4 Common Consoles 3-20
31.2.5 Other I/O Equipment 3-20
31.2.5.1 Color Display Station 3-20
31.2.5.2 Printers 3-20
31.3 E-Complex 3-20
31.3.1 Space Allocation 3-20
31.3.2 E-Complex CC Location 3-21
31.3.3 Other E-Complex Equipment 3-21

32. SYSTEM REQUIREMENTS 3-21
32.1 Architectural 3-21
32.1.1 Space 3-21
32.1.2 Raised Floors 3-21
32.1.3 Sound Control 3-21
Fig. 31-8 Generic E-Complex Layout 3-21
Fig. 32-1 Specifications for Raised Floors 3-22
Fig. 32-2 Room Surface Acoustical Requirements 3-22
32.2 Mechanical, Cooling 3-22
Fig. 32-3 Common Console Cooling Air Requirements 3-22
Fig. 32-4 ISSS Heat Generated 3-22
32.2.1 Common Console 3-22
32.2.2 Back Room Equipment 3-22
32.3 Electrical 3-22
32.3.1 Power 3-22
Fig. 32-5 Numbers of Common Consoles - ISSS 3-23

Page Number

Fig. 32-6 Heat Dissipation 3-23
32.3.2 Grounding 3-23

33. INTERFACES. 3-23
Fig. 32-7 BRE Cooling Air Requirements 3-23
Fig. 32-8 Air Exhaust Rate 3-23
Fig. 32-9 ISSS Subsystem Power 3-23
33.1 Physical 3-23
33.1.1 Adjacent Common Consoles 3-23
33.1.2 Raised Floor 3-24
33.1.3 Cabling 3-24
33.1.4 VSCS 3-24
33.1.5 Hold down bolts 3-24
33.2 Electrical 3-24
33.2.1 Internal 3-24
33.2.1.1 CC to LCN 3-24
Fig. 33-1 Block Diagram of ISSS 3-25
33.2.1.2 CC to BCN 3-25
33.2.1.3 CC to Adjacent CC 3-25
33.2.2 External 3-26
33.2.2.1 LCN to HCS 3-26
33.2.2.1.1 Common Digitizer (CD) Format 3-26
33.2.2.1.2 Interfacility Input (INTI) 3-26
33.2.2.1.3 Interfacility Output (INTO) 3-26
33.2.2.1.4 General Purpose Input (GPI) 3-26
33.2.2.1.5 General Purpose Output (GPO) 3-26
33.2.2.2 VSCS 3-26
33.2.2.3 ISSS to DARC 3-26
33.2.2.3.1 Flight Data 3-26
33.2.2.3.2 DARC Keyboard Data 3-26
33.2.2.3.3 DARC Display Output 3-26
33.2.2.4 LCN Between Other Sectors 3-26

34.-39. RESERVED. 3-27

CHAPTER 4. PROJECT SCHEDULE AND STATUS 4-1

40. PROJECTS SCHEDULES AND GENERAL STATUS 4-1

41. MILESTONE SCHEDULE SUMMARY 4-1
41.1 Legend for Figure 41-2 4-1
41.1.1 Legend for Figure 41-2, ▲SPDIP 4-1
41.1.2 Legend for Figure 41-2, T 4-1
41.1.3 Legend for Figure 41-2, P 4-1
41.1.4 Legend for Figure 41-2, S 4-1
41.1.5 Legend for Figure 41-2, C 4-1
41.1.6 Legend for Figure 41-2, # 4-1
41.1.7 Legend for Figure 41-2, D 4-1
41.1.8 Legend for Figure 41-2, A 4-1
41.1.9 Legend for Figure 41-2, I 4-1
41.1.10 Legend for Figure 41-2, O 4-1
Fig. 40-1 ISSS Program Plan and Schedule 4-2
41.1.11 Legend for Figure 41-2, E 4-3
41.2 Major Milestones 4-3

Page Number

42. INTERDEPENDENCIES AND SEQUENCE 4-3
Fig. 41-1 Milestone List 4-3
Fig. 41-2 ISSS Implementation Milestone Schedule by Site 4-3
Fig. 41-3 Major Milestone Schedule 4-4
42.1 HCS 4-4
42.2 Upgrade Power 4-4
42.2.1 Commercial Power 4-4
Fig. 41-4 Generic Implementation Schedule 4-4
42.2.2 Facility Power 4-4
42.3 HVAC 4-5
42.4 Operational Space 4-5
Fig. 42-1 Interdependencies and Sequence 4-5
42.4.1 Asbestos Abatement 4-5
42.4.1.1 Equipment Relocation 4-5
42.4.1.2 Temporary Wall 4-5
42.4.2 Refurbishment 4-6
42.4.3 Raised Floor 4-6
42.5 Backroom Space 4-6
42.5.1 Old Equipment Removal 4-6
42.5.1.1 Equipment Move 4-6
42.5.1.2 Temporary Wall 4-6
42.5.1.3 Asbestos Abatement 4-6
42.5.2 Refurbishment 4-6
42.5.3 Raised Floor 4-6
42.6 VSCS 4-6
42.7 Training 4-7
42.8 Software 4-7
42.9 DARC 4-7
42.10 Spares 4-7
42.11 PAMRI 4-7
42.12 Flight Plan Communications Link (FPCL) 4-7
42.13 Procedures 4-8

43. VERIFICATION SEQUENCE 4-8
Fig. 43-1 Verification Sequence 4-8

44-49. RESERVED 4-8

CHAPTER 5. PROJECT MANAGEMENT 5-1

50. PROJECT MANAGEMENT, GENERAL 5-1
Fig. 50-1 Management Responsibilities 5-1

51. PROJECT CONTACTS 5-1
51.1 Regional Representatives 5-1
51.2 ARTCC Onsite Coordinators 5-1
51.3 ACT Personnel 5-1
51.4 FAA Academy/Depot Personnel 5-1
51.5 FAA Headquarters Personnel 5-1

52. PROJECT COORDINATION 5-1

53. PROJECT RESPONSIBILITY MATRIX 5-1

Page Number

54. PROJECT MANAGERIAL COMMUNICATIONS 5-1
54.1 Meetings 5-1
54.1.1 Contractor Sponsored 5-1
Fig. 52-1 Project Coordination Matrix 5-2
54.1.2 FAA Sponsored 5-2
54.1.2.1 AF Transition Requirements Verification Team 5-2
54.1.2.2 AF Advanced Automation System Test Team 5-2
54.1.2.3 AT Transition Requirements Verification Team 5-2
Fig. 53-1 Primary Responsibility Matrix 5-3
54.1.2.4 AT Advanced Automation System Test Team 5-3
54.1.2.5 Facility Operational Impact Group 5-3
54.1.2.6 Sector Suite Requirements Verification Team 5-3
54.1.2.7 Air Traffic AAS Procedures Team 5-3
54.1.2.8 NAILS Management Team 5-3
54.1.2.8.1 Provisioning Guidance Conference 5-4
54.1.2.8.2 LSA Guidance Conference 5-4
54.1.2.8.3 Provisioning Conference 5-4
54.1.2.8.4 LSA Conference 5-4
54.1.2.9 AAS Regional Representatives 5-4
54.1.2.10 En Route Personnel 5-4
54.1.2.11 Human Relations Briefings 5-4
54.1.3 FAA Technical Center. 5-4
54.1.4 Mike Monroney Aeronautical Center 5-4
54.1.4.1 FAA Academy 5-4
54.1.4.2 FAA Logistics Center 5-4
54.2 Bulletins 5-5
54.3 Computer Net 5-5
54.3.1 FAA Electronic Mail 5-5
54.3.2 MM Profs 5-5

55. IMPLEMENTATION STAFFING 5-5

55.1 Implementation Teams 5-5
55.1.1 Team Training 5-5
55.1.2 Team Responsibilities 5-5
55.1.3 National Implementation Teams 5-5
55.2 Labor Relation Organizations 5-6
55.3 NAS Plan Coordinator/NAS Implementation Manager 5-6
55.4 ACF Coordinator/Assistant Manager for NAS Implementation 5-6
55.5 AF and AT AAS/VSCS Onsite Coordinators 5-6
Fig. 55-1 AAS Onsite Coordinator Participation 5-6
55.6 AAS Onsite Administrative Support 5-7

56. POLICIES, PLANS, AND REPORTS 5-7
56.1 Policies 5-7
56.1.1 NAS Design Documents 5-7
56.1.2 NAS Transition Phase System Description Document 5-7
56.1.3 NAS Integrated Logistics Support Policy 5-7
56.1.4 FAA Test Policy Order 5-7
56.2 Plans 5-7
56.2.1 NAS Documentation 5-7
56.2.1.1 Capital Investment Plan 5-7
56.2.1.2 Interface Management Plan 5-7
Fig. 56-1 Plan Hierarchy 5-7
56.2.1.3 Master Schedule System Implementation Plan 5-8

Page Number

56.2.1.4 NAILS Master Plan 5-8
56.2.1.5 NAS Training Plan. 5-8
56.2.1.6 ACT Operations Management Plan 5-8
56.2.1.7 NAS Verification Plan 5-8
56.2.1.8 NAS Verification and Implementation Handbook 5-8
56.2.1.9 NAS Transition Plan 5-8
56.2.1.10 NAS Human Resource Plan (HRM) 5-8
56.2.2 Project Specific Plans 5-8
56.2.2.1 Project Implementation Plan 5-8
56.2.2.2 Related Project Plans 5-8
56.2.2.3 Project Management Plan 5-8
56.2.2.4 Master Test Plan 5-9
56.2.2.5 AAS OT&E Program Plan 5-9
56.2.2.6 Test Requirements: Operational Test and Evaluation (OT&E) of the Advanced Automation System 5-9
56.2.2.7 Integrated Logistics Support Plan 5-10
56.2.3 Field Plans 5-10
56.2.3.1 Regional Transition Plan 5-10
56.2.3.2 Facility Transition Plan 5-10
56.2.3.3 Site Implementation Plan 5-10
56.3 Reports 5-10
56.3.1 Management Reports 5-10
56.3.2 Status Reports 5-10
56.3.3 Problem Reports 5-11
56.3.4 Initial Operating Capability Reports 5-11
56.3.5 Final IOC Reports 5-11
56.3.6 Operational Readiness Demonstration Reports 5-11
56.3.7 Final ORD Report 5-11
56.3.8 National Airspace Performance Reporting System 5-11
56.3.9 Deployment Reports 5-11
56.3.10 Site Survey Reports 5-11
56.3.11 Test Readiness and Test Result Reports 5-11
56.3.11.1 Test Reports 5-11
56.3.11.2 Contractor Interim Reports 5-11
56.3.11.3 FAA Interim Reports 5-11

57. APPLICABLE DOCUMENTS 5-11
57.1 Contractor Documentation 5-12
57.1.1 Site Preparation Design Information Package 5-12
Fig. 57-1 Delivery of Contractor Developed Documents 5-12
57.1.1.1 Schedule 5-12
57.1.1.2 SPDIP Contents 5-12
57.1.2 Transition Plan 5-12
57.1.2.1 Transition Plan Schedule 5-13
57.1.3 Site Activation Plan 5-13
57.1.3.1 Schedule 5-13
57.1.3.2 Contents 5-13
57.1.4 Site Readiness Review Report 5-13
57.1.5 Training Plan 5-13
57.1.6 Calibration/Measurement Requirement Summary 5-14
57.2 Site Specific Design Package 5-14

58. AIR TRAFFIC CONTROL PROCEDURES 5-14
58.1 National ATC and Facility Operating Procedures 5-14
58.2 Site ATC Standard Operating Procedures 5-14

Page Number

59. Human Resource Management Planning 5-15

CHAPTER 6. PROJECT FUNDING 6-1

60. GENERAL FUNDING STATUS 6-1

61. REGIONAL/FACILITY COST ESTIMATES 6-1

62. ISSS PROJECT FUNDING 6-1
62.1 Regional Engineering and Field Support 6-1
62.2 Major Site Construction (Contract) 6-1
62.3 Site Preparation 6-1
62.4 Resident Engineers 6-1
62.5 Technical Onsite Representative 6-1
62.6 Travel 6-1
62.7 Overtime 6-1
62.8 Equipment Relocation 6-1
62.9 Equipment Removal and Disposition 6-1

63. F&E PROJECT FUNDING DISTRIBUTION 6-1
63.1 Personnel Compensation Benefits and Travel (PCB&T) 6-1
63.2 Travel and Overtime Charges 6-1
63.3 Major Site Construction 6-2
63.4 Equipment Material & Services 6-2

64. PRIME FUNDED SUPPORT ITEMS 6-2
64.1 Support and Services 6-2
64.2 Training 6-2
64.3 Consumables 6-2
64.4 Logistics 6-2
64.5 Spares 6-2

65.-69. RESERVED 6-2

CHAPTER 7. DEPLOYMENT 7-1

70. GENERAL DEPLOYMENT ASPECTS 7-1
70.1 Deployment Readiness Review Team 7-1
70.2 Deployment Readiness Review (DRR) Checklist 7-1

71. SITE PREPARATION 7-2
71.1 Facilities Modernization 7-2
71.1.1 Transition Impact 7-2
71.1.2 ARTCC Modernization 7-2
71.1.2.1 First ARTCC/ISSS Improvement - Chilled Water Plant Rehabilitation 7-2
71.1.2.2 Second ARTCC/ISSS Improvement - Control Wing Basement Modification Pkg. No.1 7-3
71.1.2.3 Third ATRCC/ISSS Improvement - Control Wing First Floor (4 Bay Expansion Plus) Modification Package No. 3 7-3
71.1.2.4 Fourth ARTCC/ISSS Improvement - Expansion of The ARTCC Power Systems 7-4

Page Number

71.1.3 Administrative Facilities Impact 7-4
71.1.4 Administrative Wing Requirements 7-4
71.1.4.1 Administrative Support Areas 7-4
71.1.4.2 Office Space 7-4
71.1.5 Temporary Facility Requirements 7-5
71.1.5.1 Temporary Personnel Housing 7-5
71.1.5.2 Staging Area 7-5
71.2 Requirements 7-5
71.3 Planning 7-5
71.3.1 Initial Site Survey 7-5
71.3.2 SAP Site Survey 7-5
71.3.3 Final Site Survey 7-6
71.4 Execution 7-6
71.5 Provide Site GFP 7-7
71.6 Security Access 7-7

72. DELIVERY 7-7

73. INSTALLATION 7-7

74.-79. RESERVED 7-7

CHAPTER 8. VERIFICATION 8-1

80. GENERAL VERIFICATION ASPECTS 8-1
Fig. 80-1 Test Location Matrix 8-1

81. FACTORY VERIFICATION 8-1
81.1 Contractor Factory Testing 8-1
Fig. 81-1 Factory Testing Summary Chart 8-2
81.1.1 Production Acceptance Tests and Evaluations 8-2
81.1.2 Factory Partial System Test 8-2
81.1.3 Factory Full System Test 8-2
81.1.3.1 Human Factors Engineering, Computer-Human Interface (CHI) 8-2
Fig. 81-2 Full Factory Test Major Areas 8-2
81.1.3.1.1 Hardware Design Characteristics 8-2
81.1.3.1.2 Physical CHI Design Characteristics 8-3
81.1.3.1.3 Functional CHI Design Characteristics 8-3
81.1.3.1.4 Multiposition Sector Suites CHI 8-3
81.1.3.2 Functional Performance 8-3
81.1.3.3 Capacity and Response Time 8-3
81.1.3.4 Host Baseline 8-3
81.1.3.5 Hardware 8-4
81.1.3.6 Software 8-4
81.1.3.7 Hardware and Software Integration 8-4
81.1.3.8 Modified Government Furnished Property 8-4
81.1.3.9 Local Communications Network 8-4
81.1.3.10 Failure and Recovery 8-5
81.1.3.11 Transition 8-5
81.1.3.12 Host Operational Monitor 8-5
81.1.3.13 Interface 8-5
81.1.3.14 Maintenance 8-5
81.1.3.15 Support Functions 8-5

Page Number

81.1.3.16 Security 8-6
81.1.3.17 On-line Certification 8-6
81.1.3.18 Manual Reconfiguration 8-6
81.1.3.19 VSCS 8-6
81.1.4 First Article Test 8-6
81.1.5 Factory System Qualification 8-6
81.1.5.1 Sector Suite Arrangement 8-6
81.1.5.2 Live Entry 8-6
81.1.5.3 Reconfiguration 8-6
81.1.5.4 DYSIM 8-6
81.1.5.5 Display Recording and Playback 8-6
81.1.5.6 On-line Certification 8-6
81.1.5.7 Failure and Recovery 8-6
81.1.5.8 Resource Utilization 8-7
81.2 FAA Activities During Factory Testing 8-7

82. FAA TECHNICAL CENTER VERIFICATION 8-7
82.1 Installation and Integration 8-7
82.1.1 Development Test and Evaluation (DT&E) 8-7
82.1.2 System Test 8-7
Fig. 82-1 FAA Technical Center System Test Matrix 8-8
82.1.2.1 Human Engineering and CHI 8-8
82.1.2.1.1 Situation Display 8-8
82.1.2.1.2 Controller and Supervisory Positions 8-9
82.1.2.2 Functional Performance 8-9
82.1.2.2.1 Recorded Live Radar Tests 8-9
82.1.2.2.2 Live Radar Tests 8-9
82.1.2.2.3 Failure/Recovery Tests 8-10
82.1.2.2.4 Transition Tests 8-10
82.1.2.2.5 Special Tests 8-10
82.1.2.3 Interfaces 8-10
82.1.2.4 Maintenance 8-10
82.1.2.5 Support Functions 8-10
82.1.2.6 Security 8-10
82.1.2.7 On-line Certification 8-10
82.1.2.8 Failure and Recovery 8-10
82.1.2.9 Transition 8-11
82.1.2.10 Site Simulation 8-11
82.1.2.11 Capacity and Response 8-11
82.1.2.12 Host Baseline 8-11
82.1.2.13 Direct Access Radar Channel 8-11
82.1.2.14 Manual Reconfiguration 8-11
82.1.2.15 VSCS 8-11
82.1.2.16 Regression and Retesting 8-11
82.1.2.17 Updated Software 8-12
82.1.3 System Acceptance 8-12
82.1.3.1 System Qualification Tests 8-12
82.1.3.2 FAA Technical Center Acceptance Test 8-12
82.2 Post Acceptance FAA Testing Activities 8-12
82.2.1 NAS Integration Test and Evaluation 8-12
82.2.2 System Evaluation Tests 8-12
82.2.2.1 Site Simulation Tests 8-12
82.2.2.2 Failure Mode Tests 8-13
82.2.2.3 System Effectiveness Tests 8-13
82.2.2.4 System Stability Test 8-13

Page Number

82.2.2.5 Reliability Maintainability Acceptability 8-14
82.2.3 Operational Evaluation Test 8-14
82.2.3.1 Basic Operations 8-14
82.2.3.1.1 Basic ATC Operations Tests 8-14
82.2.3.1.2 Basic System Maintenance Operations Tests 8-14
82.2.3.1.3 Basic System Support Operations Tests 8-15
82.2.3.2 Combined Operations Tests 8-15
82.2.3.2.1 Combined ATC Operations Tests 8-15
82.2.3.2.2 Combined ATC/System Maintenance Operations Tests 8-15
82.2.3.3 Integrated Facility Operations Tests 8-16
82.2.4 System Shakedown 8-16

83. SITE VERIFICATION 8-16
83.1 Contractor Testing 8-16
83.1.1 Installation and Integration Test 8-16
Fig. 83-1 Site Verification Matrix 8-17
83.1.1.1 Installation and Checkout 8-17
83.1.1.1.1 Contractor Tasks 8-17
83.1.1.1.2 FAA Tasks 8-17
83.1.1.2 Contractor Interface and Integration Testing 8-17
83.1.1.2.1 Contractor Tasks 8-17
83.1.1.2.2 FAA General Tasks 8-18
83.1.1.2.3 FAA Software Tasks 8-18
83.1.1.2.3.1 ASM-400 Site Program Bulletin 8-18
83.1.1.2.3.2 ATR-420 Site Program Bulletin 8-18
83.1.1.3 Electromagnetic Radiation 8-18
83.1.2 Site System Tests 8-18
83.1.2.1 Site Adaptation 8-18
83.1.2.2 Functional Characteristics 8-18
83.1.2.3 Failure and Recovery 8-19
83.1.2.4 Transition 8-19
83.1.2.4.1 General Requirements 8-19
83.1.2.4.2 Single ISSS Failure Requirement 8-19
83.1.2.4.3 Multiple ISSS Failures Requirements 8-19
83.1.2.5 On-line Certification 8-20
83.1.2.6 Security 8-20
83.1.2.7 Support Functions 8-20
83.1.2.7.1 Training 8-20
83.1.2.7.2 Data Reduction and Analysis 8-20
83.1.2.8 Manual Reconfiguration 8-20
83.1.3 Site Acceptance Test 8-21
83.2 Contractor Acceptance Inspection 8-21
Fig. 83-2 CAI Terms Diagram 8-21
83.3 FAA Integration and Testing 8-21
83.3.1 Test Readiness Review (TRR) 8-21
83.3.2 FAA Integration and Testing Methodology 8-21
83.3.2.1 Installation and Integration Test 8-21
83.3.2.2 Software Integration 8-21
83.3.2.3 Site System Tests 8-22
83.3.2.4 Failure Recovery 8-22
83.3.2.5 Operational System Tests 8-22
83.3.2.6 Procedure Validation 8-22
83.3.3 Contractor Support 8-22
83.3.4 FAA Technical Center Site Support 8-22
83.4 Certification 8-22

Page Number

83.5 Initial Operating Capability 8-22
83.6 System Shakedown and Operational Transitions 8-23
83.6.1 System Shakedown Phases 8-24
83.6.1.1 Phase 1 8-24
83.6.1.2 Phase 2 8-24
83.6.1.3 Phase 3 8-25
Fig. 83-3 Operational Conditions for System Shakedown Phases 8-25
83.6.1.4 Phase 4 8-25
83.6.2 Operational Transition 8-26
83.6.2.1 Configuration of Systems 8-26
83.6.2.1.1 NAS System Software 8-26
83.6.2.1.2 DARC 8-27
83.6.2.1.3 VSCS 8-27
83.6.2.2 Operational Support Functions 8-27
83.6.2.2.1 Systems Engineer 8-27
83.6.2.2.2 Area Manager-In-Charge 8-27
83.6.2.2.3 Area Supervisor-In-Charge 8-27
83.6.2.2.4 Traffic Management Unit 8-27
83.6.2.2.5 Transition Coordinator 8-27
83.6.2.3 Individual Sector Transition Steps 8-28
83.6.2.3.1 System Coordination (Step 1) 8-28
83.6.2.3.2 PVD Operations with Common Console Monitoring (Step 2) . 8-28
83.6.2.3.3 Transfer of Position Responsibility (Step 3) 8-28
83.6.2.3.4 Common Console Operations with PVD Monitoring (Step 4) . 8-29
83.6.2.3.5 Return to PVD Console Operations 8-29
83.6.2.4 Operational Considerations 8-29
83.6.2.4.1 Mixed (PVD/ISSS) Operations 8-30
83.6.2.4.2 Combining/Decombining Sectors 8-30
83.6.2.4.3 Equipment Outages 8-31
83.6.2.4.3.1 Host 8-32
83.6.2.4.3.2 Common Console 8-32
83.6.2.4.3.3 LCN or LIU 8-32
83.6.2.4.3.4 DARC, BCN, ESI or Radar Data Distribution Unit 8-32
83.6.2.4.3.5 CDC/DCC 8-33
83.6.2.4.3.6 Display Generator (DG) 8-33
83.6.2.4.3.7 PAMRI Adapter Unit (AU) 8-33
Fig. 83-4 Potential Site Response to Loss of System Componets During each Transition Phase 8-33
83.7 Joint Acceptance Inspection 8-33
83.7.1 Maintaining a Pre-JAI Punch List 8-34
83.7.2 Organizing the Joint Acceptance Board 8-34
83.7.3 Determining ISSS Acceptability 8-34
83.7.4 Declaration of ORD 8-34
83.7.5 Commissioning 8-34
83.7.6 Writing the JAI Report 8-35
83.7.7 Acceptance of Contract Items 8-35
84.-89. RESERVED 8-35

CHAPTER 9. INTEGRATED LOGISTICS SUPPORT 9-1

90. MAINTENANCE CONCEPT 9-1
90.1 ISSS Contractor Requirements 9-1
90.2 Centralized Control 9-1

Page Number

90.3 Equipment Monitoring 9-1
90.4 Hardware Maintenance 9-1
90.4.1 Onsite Maintenance 9-1
90.4.1.1 Periodic and Preventive Maintenance 9-2
90.4.1.2 Corrective Maintenance 9-2
90.4.2 Intermediate Maintenance 9-2
90.4.3 FAA Depot Maintenance 9-2
90.5 Software Maintenance 9-2
90.5.1 On-site Software Maintenance 9-3
90.5.2 Centralized Software Maintenance 9-3
90.5.3 Software Maintenance Staffing 9-3
90.5.3.1 First Year 9-3
90.5.3.2 Following Years 9-3
90.6 Maintenance Transition 9-3

91. TRAINING 9-3
91.1 Contractor's Role 9-3
91.2 Methods of Training 9-4
91.2.1 Advanced Automation Training System 9-4
91.2.2 Detached Console Training 9-4
91.2.3 Dynamic Simulation 9-4
91.2.4 Classroom 9-4
91.2.5 Self-study Training 9-4
91.3 Personnel for Training 9-4
91.3.1 Training Personnel 9-4
91.3.2 Controller 9-4
91.3.3 Software 9-5
91.3.3.1 General Course Outcomes 9-5
91.3.3.2 FAA Technical Center Course Outcomes 9-5
91.3.4 Airway Facilities 9-5

92. SUPPORT TOOLS AND TEST EQUIPMENT 9-5
92.1 Simulation Testing 9-5

93. SUPPLY SUPPORT 9-6

94. CONTRACTOR DATA AND TECHNICAL MANUALS 9-6

95. EQUIPMENT REMOVAL 9-7
95.1 Obsolete Equipment 9-7
95.1.1 Computer Display Channel/Display Channel Complex 9-7
95.1.2 Equipment Removed 9-7
95.2 Renovation of M-1 Console and CDC/DCC Equipment Areas 9-7

96. FACILITIES 9-8

97.-99. RESERVED 9-8

CHAPTER 10. ADDITIONAL PROJECT IMPLEMENTATION ASPECTS 10-1

100. ISSS CONFIGURATION MANAGEMENT 10-1
100.1 Site Configuration Management before Acceptance at Last Site 10-1

Page Number

100.1.1 Baseline 10-1
100.1.2 Configuration Control Board 10-1
100.1.3 Change Requests 10-1
Fig. 100-1 Change Flow After FAA Technical Center Acceptance 10-1
100.1.4 Change Implementation 10-1
100.1.5 Problem Reporting 10-1
100.2 Operational Support Phase Configuration Management 10-1
100.2.1 Baseline 10-1
100.2.2 Configuration Control Boards 10-1
100.2.3 Change Requests 10-1
Fig. 100-2 Change Flow After Acceptance at All Sites 10-2
100.2.4 Change Implementation 10-2
100.2.5 Problem Reporting 10-2

101.-109. RESERVED 10-2

APPENDIX 1. First use of Terms, Abbreviations, and Acronyms A1-1

APPENDIX 2. Table of Documents. A2-1

APPENDIX 3. Endnotes. A3-1

CHAPTER 1. GENERAL

1. **PURPOSE**. The Initial Sector Suite System (ISSS) Project Implementation Plan (PIP) provides guidance and direction for the orderly implementation of the ISSS at the 20 conterminous United States air route traffic control centers (ARTCC). This plan establishes project management, project implementation guidance, and responsibilities governing the activities of organizations involved in this implementation process. In that capacity it serves the four purposes: organizing ideas, communicating ideas, providing a model for site specific plans, and guiding activities within the scope defined in paragraph 5. A major portion of this document consists of an ISSS description and detailed descriptions of the site implementation process. These data reflect the equipment unit quantities and the schedule by which the advanced automation system (AAS) prime contractor is obligated. However, this material should not be taken to be 100 percent accurate since the system design continues to evolve and certain details may be subject to further change.

1.1 **Organizing Ideas**. The Federal Aviation Administration's (FAA) collective concept for the implementation of the ISSS resides in many places. There are applicable documents such as circulares, orders, directives, and standards written by the Office of Management and Budget, the Department of Transportation, the FAA, and others. There are system requirements, design documents, and system specifications for the National Airspace System (NAS). There are transition plans for national, regional, and site levels. There are plans provided by the AAS contractor for transition, site activation, site preparation, site readiness, logistics support, training, and more. Despite the size of the volume of paper and print, some aspects of the ISSS implementation are not yet known. Still other ideas are not yet committed to paper. The first purpose of the ISSS PIP is to organize all the ideas from installation to training to logistics support to transition to old equipment removal into a single coherent document.[1]

1.2 **Communicating Ideas**. The implementation of the AAS is a large and complicated project. The ISSS is one of the major segments of that project. Billions of dollars and millions of hours of effort by thousands of people are planned. In this project involving thousands of persons, success or failure rests on effective communication of ideas among the participants. The second purpose of the ISSS PIP is to communicate the implementation concepts. Personnel at the 20 ARTCC's represent the most important audience for the PIP. Secondary audiences are organizations at the FAA Technical Center (ACT), the Mike Monroney Aeronautical Center (AAC), FAA headquarters (HQ), regional organizations (RO), and the AAS production and installation contractor.

1.3 **Providing a Model**. The third purpose of this generic plan is to provide a model or an adaptable starting point for the writers of subordinate documents. To that end, the ISSS PIP addresses the implementation of the system at a generic, national level. Regional and facility transition plans are written to merge this PIP, the PIP's from other projects, and the NAS Transition Plan.[2] Site specific details will be provided in site specific transition plans [i.e., Site Implementation Plans (SIP)] to be developed by site personnel using this PIP as guidance. This top down process facilitates planning efficiency through the development of uniform formatted site plans with site requirements incorporated by those personnel most familiar with site specific detail.

1.4 **Guiding Activities**. The PIP provides technical guidance and direction to all levels of the FAA responsible for project implementation.[3] The guidance in the PIP provides a basic overview of the project implementation tasks and responsibilities. Highly detailed and comprehensive technical guidance is provided by way of the documents referenced by the PIP.[4] Chapter endnotes are used to reference the source of material contained within the text of this document or other points of interest. Chapter endnotes are collected in one central place and located in appendix 3.

2. **DISTRIBUTION**. This order is distributed to the director level in the Offices of Budget, Management Systems, Labor and Employee Relations, and the Program Directors for Automation, Surveillance, and Communications; division level in the Logistics, NAS Transition and Implementation, Systems Maintenance, Research and Development, NAS Program Management, Air Traffic Plans and Requirements,and NAS System Engineering Services; the Offices of Human Resource Management and Training and Higher Education; branch level to the Program Manager for Advanced Automation; division level to regional Air Traffic, Airway Facilities, Logistics, and Resource Management Divisions; division level to the Engineering, Test and Evaluation, and the Engineering Research and Development Services at the FAA Technical Center and the Facility Support, FAA Academy, and the FAA Logistics Center at the Mike Monroney Aeronautical Center; and limited distribution to the Air Route Traffic Control Centers for Airway Facilities (AF) and Air Traffic (AT) field offices.

3. **DEFINITIONS**. The terms, abbreviations, and acronyms that are peculiar to this order are found in appendix 1.

4. **AUTHORITY TO CHANGE THIS ORDER**. The authority to change this document rests with the Program Manager for Advanced Automation, AAP-1. The Advanced Automation Program Office (AAPO) Implementation Branch (AAP-240) reviews this PIP annually for necessity to revise.

5. **SCOPE**. The scope of this order is limited to the implementation of the ISSS at the 20 conterminous ARTCC's. Implementation is defined as that activity between initial planning for installation and removal of replaced equipment. The text of this document presents the detailed information necessary for each ARTCC facility to use as guidance in the creation of that site's transition plan relative to the ISSS portion of the AAS project. The ISSS equipment installed in the support facilities is NOT the subject of this order. Support facilities include the ACT and the AAC. The ISSS equipment at the FAA Technical Center serves as the initial test bed where the implementation organization conducts the initial operational test and evaluation (OT&E). The system support computer complex (SSCC) sustains maintenance and modification of the systems at the operational facilities.[5] The AAC provides the initial basic air traffic control (ATC) personnel training. The AAC also provides the training for all hardware and software maintenance personnel.

6. **PIP CONTENT AND FORMAT**. The content and format of this PIP are governed by the documents listed in subparagraphs 6.1 and 6.2.

6.1 **PIP Content**. This PIP conforms to FAA-STD-036, Preparation of Project Implementation Plans, except as specified in the following subparagraphs.

6.1.1 **Appendix to Standard**. This PIP contains several cases where the content, defined in FAA-STD-036, Appendix I, is changed or rearranged. This has been brought about by comments against this PIP, direction from FAA management, or AAP-240 policy decisions. The insertion of the topic of *Scope* in paragraph 5 is an example.

6.1.2 **Reserved Paragraphs**. Topics are added to the content of this PIP in several places by the use of the allocated reserved paragraph numbers.

6.2 **FAA Directive System**. This PIP conforms to Order 1320.1C, FAA Directives System, except as specified in the following subparagraphs. The typeset format defined in paragraph 152 of Order 1320.1C is used.

6.2.1 **Paragraph Numbers**. This PIP uses a decimal numbering method to relate paragraphs to chapters. Subparagraph relationships to paragraphs are identified by fields of numbers separated by periods. Where high order paragraphs contain complex ideas that relate to all of the subordinate paragraphs of that high order paragraph, the number or letter method for identifying subordinate ideas is used.

6.2.2 **Page Numbers**. Pages are numbered from 1 to n for each chapter or appendix. Each page number is preceded by the chapter number or appendix number.

6.2.3 **Figure Numbers**. Figures are similarly numbered from 1 to n, for the applicable paragraph, preceded by the paragraph number.

7.-19. **RESERVED**.

CHAPTER 2. PROJECT OVERVIEW

20. SYNOPSIS. The ISSS is implemented at 20 conterminous ARTCC's. The ISSS provides all plan view display (PVD) system controller functions available at ISSS implementation time plus a subset of new capabilities.[1] This provides operational use of the AAS sector suites prior to the deployment of the full AAS configuration. Further, the ISSS provides the maximum possible commonality with the full AAS configuration. The systems incorporated into the ISSS will also require minimal modifications and performance of interconnecting systems will not be degraded.[2]

	Segment/System		LOCATION		
Par 20	Title	Acronym	ARTCC	ACT	Tower
.1.1	Host Computer System	HCS	X	X	
.1.2	Voice Switching & Control Sys	VSCS	X	X	
.1.3	Tower Communications System	TCS		X	X
.1.4	PAM Replacement Item	PAMRI	X	X	
.1.5	Initial Sector Suite System	ISSS	X		
.1.6	Tower Control Computer Complex	TCCC		X	X
.1.7	Terminal Advanced Auto Sys	TAAS	X		
.1.8	Area Control Computer Complex	ACCC	X		
.1.9.1	Support Sys Computer Complex-1	SSCC-1		X	
.1.9.2	Support Sys Computer Complex-2	SSCC-2		X	
.1.9.3	Support Sys Computer Complex-3	SSCC-3		X	
.1.9.4	Support Sys Computer Complex-4	SSCC-4		X	

AAS Segments and AAP Systems
Fig. 20-1

20.1 AAS Synopsis. The ISSS is one segment or step in the implementation of the AAS. Figure 20-1 shows the AAS segments and the Advanced Automation Program (AAP) systems. The AAS segments are the ISSS, the terminal advanced automation system (TAAS), the tower control computer complex (TCCC), and the area control computer complex (ACCC). Subsystems that make up these segments and systems related to these segments are addressed in the following subparagraphs.

20.1.1 Host Computer System. The host computer system (HCS) provided added computer capacity to support the increasing demands of the NAS. The HCS supports the NAS until the AAS becomes fully operational with the ACCC. The HCS replaced the IBM 9020A and 9020D computers at the 20 ARTCC's with dual International Business Machine Corporation (IBM) 3083 computer systems. The HCS uses re-hosted 9020 NAS software. Thus, the HCS performs the identical ATC functions as the old IBM 9020 computer system, namely:

a. Flight plan acceptance, processing, and distribution.

b. Radar data processing and coordinate conversion.

c. Multiple radar data processing.

d. Radar data tracking.

e. ARTCC to ARTCC and ARTCC to automated radar terminal system (ARTS) interfacility communications.

f. Weather processing.

g. Data flow management.

The HCS consists of two identical processor subsystems. Each subsystem has the ability to provide full and direct access to all peripheral subsystems and devices. Either processor A or processor B host subsystem may be selected as the primary processor.[3] The HCS was installed in advance of and will provide reliable processing support for the ISSS.

20.1.2 Voice Switching and Control System. The Voice Switching and Control System (VSCS) replaces the existing Western Electric Company (WECO) air/ground and ground/ground voice communications switching and control system in the ARTCC's and certain terminal radar approach controls (TRACON). The VSCS:

a. Satisfies the system performance requirements of the AAS environment.

b. Reduces the total cost of communications service.

c. Provides operational flexibility for rapid reconfiguration.

d. Replaces existing equipment with modern, reliable, state-of-the-art technology.

e. Reduces controller workload.

The VSCS permits selection, interconnection, activation, and reconfiguration of communication paths between the operating ATC positions and between the controllers and the radio equipment at local and remote air/ground radio sites. The VSCS provides for keying external air/ground radios, switching to redundant equipment and circuits, and confirmations of remote operations.[4] VSCS, a project separate from the ISSS, will be housed (i.e., physically located) within the ISSS.

20.1.3 Tower Communications System. The Tower Communications System (TCS) implements air/ground and ground/ground voice communications in the Airport Traffic Control Tower (ATCT) Cab similar to that provided by VSCS to the ARTCC's and Area Control Facility (ACF). In addition to the functionality provided by the VSCS, the TCS interfaces with the TCCC generated synthesized-voice Automated Terminal Information System (ATIS) message to accept spoken remarks (voice) by the controller. The TCS automatically disseminates the ATIS on a voice communications outlet.

20.1.4 PAM Replacement Item. The PAM Replacement Item (PAMRI) is implemented at the 20 conterminous United States ARTCC's, the FAA Academy, and the ACT. The AAS request for proposal (RFP) considered PAMRI to be the first element of the ISSS segment. PAMRI is installed and made operational prior to the ISSS. Deployment of PAMRI provides for removal of existing peripheral adapter modules (PAM), the radar data acquisition subsystem's data receiver group (DRG), and the radar multiplexer (RMUX) portion of the direct access radar channel (DARC). PAMRI also provides for expansion of existing interfaces and reduces problems encountered with transition between PVD's and the ISSS.[5]

20.1.5 Initial Sector Suite System. The ISSS is implemented at the ARTCC's to provide operational use of the AAS CC's in advance of the availability of the full AAS configuration. The ISSS provides all the functions available with the PVD system at the time of ISSS implementation. The ISSS provides new functional capabilities as well, as defined in paragraph 30.1.[6] ISSS has two fundamental modes of operation; normal and autonomous. The ISSS functions and modes are discussed in chapter 3.

20.1.6 Tower Control Computer Complex. The TCCC processes and displays surveillance data (targets, tracks, and weather), flight data, and airport environmental data. The features are provided in modules that allow the implementation of two basic configurations.[7] TCCC's provide for both normal and stand-alone operations.

a. Full TCCC's with all of these processing functions.

b. Partial TCCC's with only flight and airport environmental data processing and display features.

20.1.6.1 Normal Mode. In the normal mode of operations, the TCCC accepts target data, maintains track data, and provides for display of separation assurance alerts. In this mode, the TCCC accepts and maintains flight data and weather data from its associated or parent ACCC. The TCCC also collects, processes, distributes, and displays local airport environmental data. This data is sent to the parent ACCC.[8]

20.1.6.2 Stand-Alone Mode. When communications with the parent ACCC are unavailable, the TCCC transitions to stand-alone mode. In the stand-alone mode, the TCCC provides limited surveillance processing functions and those flight data processing and display functions that do not require communications with the parent ACCC.[9]

20.1.7 Terminal Advanced Automation System. The TAAS is implemented at the ACF's to provide operational use of the AAS CC's by terminal area controllers in advance of the availability of the full AAS configuration. The TAAS is initially collocated with the ISSS in the new control wing in those ARTCC's that have sufficient room. This allows the consolidation of multiple approach/departure controls into a single facility.[10] Those facilities that do not have room in the new control room, initially install TAAS in its end state location in the old control room. This will occur after the Operational Readiness Demonstration (ORD) of ISSS, removal of the decommissioned PVD equipment, and refurbishment of the old control room. The TAAS provides terminal air traffic control functional capability equivalent or superior to the ARTS IIIA terminal automation system. The TAAS provides all of the ACCC hardware and a subset of the ACCC software. The TAAS provides for supporting single or multiple terminal areas. These terminal areas are either contiguous or noncontiguous. The TAAS interfaces with a TCCC or provides data to digital bright radar indicator tower equipment (D-BRITE) located at airport towers.[11]

20.1.8 Area Control Computer Complex. The ACCC provides support to the following functions:[12]

a. Primary processing such as:[13]

(1) Sustaining operations.

(2) Processing input messages.

(3) Processing basic ATC functions.

(4) Processing automation functions.

(5) Processing output messages.

(6) Processing oceanic ATC functions.

(7) Processing facility backup functions.

b. Data entry and display processing for all ATC positions in the ACCC.[14]

c. Monitor and control processing for work stations for supervision, monitoring, and control of the ACCC hardware and software.[15]

d. Emergency processing of surveillance data, automatic track data, flight plan data, weather data, and oceanic ATC data.[16]

e. Training and support processing.[17]

f. Diagnostic and repair processing for diagnostic hardware and software errors, failures, and faults.[18]

20.1.9 FAA Technical Center Support Systems. The AAS provides system support facilities at the ACT. Four support system computer complexes (SSCC) are planned. The SSCC's provide functional coverage of segment unique requirements during the life cycle of that segment.[19]The support systems provide for the following support functions for each AAS segment:

a. Testing, implementation, maintenance, modification, and enhancement.

b. Configuration management, quality assurance, performance assessment, and adaptation data management.

c. Control, partitioning, allocation, performance monitoring, scheduling, and validation of the ACT support system itself.

20.1.9.1 SSCC-1. SSCC-1 will provide capabilities to mimic any ISSS site through utilization of two System Support Facilities (SSF). Each SSF will be used to mimic a site for the purpose of reproducing and resolving problems. The SSCC-1 will include the ISSS, existing Host Computer System, the Enhanced Direct Access Radar Channel (EDARC), and support facilities.

20.1.9.1.1 SSCC-1 Role. The role of the SSCC-1 is to provide centralized support to manage, maintain, and enhance the ISSS. Site adaptation data will be maintained by each site, performing updates interactively using ACT-resident software. Configuration management (CM) will be accomplished utilizing ISSS software residing at the ACT, and at each site with site personnel performing their activities interactively. Software releases will be prepared, tested, and distributed from the SSCC-1 complex. Additionally, ACT personnel will provide round-the-clock operational support to site personnel through the use of a help desk.

20.1.9.1.2 AAS Job Shop. The AAS Job Shop is a subsystem of SSCC-1 that consists of an IBM 3090-600E central procesing complex, a Rational R-1000 Ada development environment, and intelligent workstations (IWS). The Job Shop provides a complete maintenance, development, and support environment for AAS. Operational site personnel are provided logon access for adaptation data collection, problem reporting, and system distribution. The software capabilities that will be maintained in this facility are:

a. Change Control and Build (CCAB).

b. Environment Data Collection (ENVT).

c. Site Tailoring (SITE).

d. Recording, Analysis, and Playback (RAAP).

e. Central Processor System Services (CPSS).

f. Common Console Processor System Services (CCSS).

g. Display Management (DISP).

h. NAS Modifications for ISSS (NASM).

i. MMI Training Support Software (MTSS).

20.1.9.1.3 Software Support. Site software support personnel will have the ability to add, modify, or delete site adaptation data via remote connection. That is, National adaptation data will be maintained at the SSCC. Each site's Adaptation Controlled Environment Subsystem (ACES) data will have to be incorporated into the site's AAS adaptation products in a timely manner by the responsible personnel at the SSCC. When the ISSS is deployed to the ARTCC's, non-AAS Host adaptation data will remain a site maintenance responsibility. After contract acceptance inspection at each site, site personnel will be responsible for test and cutover of system releases deployed from the SSCC.

20.1.9.2 SSCC-2. Additionally, SSCC-2 replicates TCCC configurations. The SSCC-2 provides for interconnection of common consoles (CC), tower position consoles, and simulators to support ISSS, and one TCCC simultaneously. The SSCC-2 provides sufficient hardware, software, and interfaces to test interfacility communications and facility backup capabilities.[20]

20.1.9.3 SSCC-3. The SSCC-3 additionally replicates any ARTCC configuration of the TAAS.

20.1.9.4 SSCC-4. The SSCC-4 additionally supports the ACCC. The SSCC-4 provides support to the ACCC functions described in paragraph 20.1.8.[21]

20.2 ISSS Synopsis. The four major stages of implementation are preparing the site, installing and testing the equipment, transition from the old to the new equipment, and operating the ATC system after the transition. These four stages are summarized in the following subparagraphs:

20.2.1 Site Preparation. At a standard ARTCC the ISSS is implemented in the new operations area of the ARTCC, separate from the existing control room.[22] In addition to the new operations area, a portion of the adjacent area in the old control room is used for ISSS operations.[23] This adjacent space is located between the control room side of the bridge and the temporary partition separating the old control room from the new building addition. Asbestos is removed from this old control room area. The combined old and new ISSS space is equipped with lighting, acoustical surfaces, raised floors, cable trays, electrical power, and cooling to meet the needs of the full AAS. When the site preparation is completed, the new control room provides a sterile environment for the installation of and transition to the ISSS.

20.2.2 Equipment Installation/Checkout, Integration and Test. The AAS prime contractor provides installation, checkout, integration, system testing (i.e., hardware, firmware, and software) and Government acceptance testing for the ISSS in accordance with the contract and the site activation plan (SAP) [contract deliverable requirements list (CDRL) number AT01].[24] After Government acceptance of the system at the site, the FAA conducts FAA integration and testing.

20.2.3 Operational Transition. The transition from the current ATC equipment to the ISSS is accomplished while the FAA continues to provide safe ATC services to the flying public. Initially, controllers will be able to use the ISSS to monitor PVD operations. A sector-by-sector transition strategy then allows ATC from a mixed environment of sector suites in the new control room and existing sector control equipment in the old control room until controller confidence and full transition is acheived. Operational transition is further discussed in in chapter 8, paragraph 83.6. Using the ISSS to monitor PVD operations is discussed in paragraph 83.6.2.3.4.

20.2.4 Post Transition Operation. After operational transition to the ISSS, the old sector equipment is retained for some period, and (*if necessary*) is used as fallback for ATC. Controllers will maintain proficiency on the old equipment until it is decommissioned. During this period, the ISSS provides for the printing of flight strips with all amendments at appropriate positions in the old control room.[25] Once confidence is established in the ISSS, all or part of the existing sector equipment is removed. The ISSS allows this removal without modification to the remaining hardware or software.[26] It is suggested that for the first few sites, the old equipment be retained for as much as 30 days. Later sites might choose to remove the old equipment sooner. The removal date of this equipment is decided by the joint acceptance inspection (JAI) board for any given site.

21. PURPOSE. The early deployment of sector suite equipment will permit the ATC system to realize gains in controller productivity at the earliest possible time. These gains will result from an improved controller-ATC system, including the electronic display of flight data.[27] In addition, the ISSS provides an incremental step towards the modernization of the ATC system while replacing aging, difficult to maintain equipment.

22. HISTORY. In December 1981, the FAA chartered a comprehensive NAS Plan for modernizing and improving air traffic control and airway facilities services through the year 2000. The Plan addresses the compelling problems of how best to improve safety and efficiency, accommodate spiraling demands for aviation services, deal with the problems of aging or obsolete facilities, recognize the users' desires for minimal restrictions on the use of the airspace, allow for a reduced Federal role, and create a foundation for continued evolution which exploits newer technologies and developments obtained through future research.[28]

a. The NAS Plan calls for an incremental modernization process. This process started by addressing the immediate problem of relieving the computer processing limitations. In the middle of 1983, a design competition contract was awarded for the design and development of a 9020 central computer complex (CCC) replacement system as the first phase of the modernization project. This upgrade provided the additional processing power and capacity required to meet the increasing demand on the en route ATC system. IBM was awarded the production contract, and delivery of the Host computer system to ARTCC sites began in late 1986.

b. In August 1984, a design competition contract was awarded for the design and development of

the AAS as the next phase of the modernization project. This upgrade provides new modularized man-machine interface (MMI), the accepted FAA term is Computer-Human Interface (CHI), equipment in the form of CC's. Additional computer processing equipment and software, adaptable inter-equipment communication equipment in the form of a local communications network (LCN), and peripheral adapter equipment conducive to growth and/or enhancement will also enhance operational capabilities. This project is large and complicated. In November 1988, the AAS contract was awarded to IBM. Figure 22-1 defines some of the major milestones for the AAS Program.

MILESTONE	DATE
AAS Contract Award, Acquisition Phase	11/1988
PAMRI First Operational Site Delivery	04/1991
ISSS First Operational Site Delivery	02/1994
TAAS First Operational Site Delivery	02/1996
TCCC First Operational Site Delivery	02/1996
ACCC First Operational Site Delivery	08/1996
PAMRI First Operational Site ORD	10/1991
PAMRI Last Operational Site ORD	07/1993
ISSS First Operational Site ORD	08/1995
ISSS Last Operational Site ORD	05/1997
TAAS First Operational Site ORD	12/1996
TAAS Last Operational Site ORD	09/1998
TCCC First Operational Site ORD	12/1996
TCCC Last Operational Site ORD	01/2003
ACCC First Operational Site ORD	02/1998
ACCC Last Operational Site ORD	01/2000

Major AAS Program Milestones
Fig. 22-1

23.-29. **RESERVED**.

CHAPTER 3. PROJECT DESCRIPTION

30. SYSTEM DESCRIPTION. This chapter provides an overview of the en route ATC automation system and its modes of operation. The description reflects ATC after ISSS implementation. Paragraph 30.1 describes the functionality of the en route ATC automation system and paragraph 30.2 describes its modes of operation. Paragraphs 31 and 32 provide a summary physical description of the ISSS and its architectural requirements, respectively. Paragraph 33 describes the ISSS interfaces.

30.1 En Route ATC Automation System. The major subsystems of the en route ATC automation system are described in chapter 2 or in the following subparagraphs. Figure 30-1 identifies each subsystem, its function, and the paragraph of this order that describes that subsystem. The ISSS is the AAS segment that provides the data display and data entry functions. These functions are provided by the CC's and LCN with support from the HCS. Figure 30-2 shows the relationship among these subsystems.

Para.	Subsystem	Function
30.1.1	ISSS	Data Display and Entry
30.1.2	DARC	Backup Data Display, Entry, and Processing
20.1.1	HCS	Data Processing
20.1.2	VSCS	Voice Communications
20.1.4	PAMRI	Interface from HCS to External Devices

Major Subsystems of the En Route ATC System
Fig. 30-1

30.1.1 Initial Sector Suite System. This description of the ISSS is divided into four major functions or subsections as shown in figure 30-3. The ISSS is implemented at the 20 conterminous United States ARTCC's. The ISSS provides for operational use of the AAS sector suite equipment in advance of the delivery of the full AAS configuration. The early deployment of sector suite equipment permits the ATC system to realize early gains in controller productivity. These gains result from a new work station that provides an improved interface between the controller and the ATC system. This improved interface, in addition to interactive procedures between man and machine, includes electronic display of flight data.[1]

a. The ISSS consists of the following six major hardware subsystems:[2]

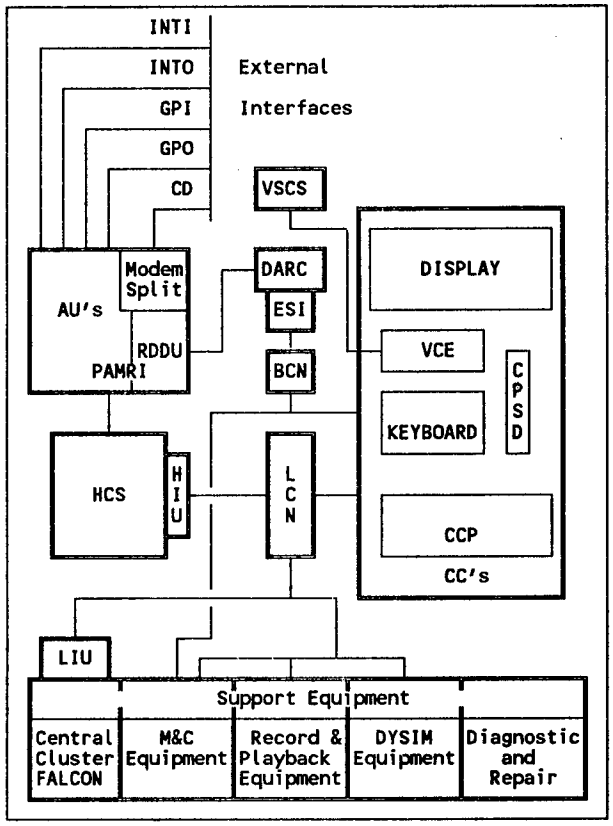

Relationship of Functional Elements
Fig. 30-2

Para #	ISSS Functional Description
30.1.1.1	Data Display
30.1.1.2	Data Entry
30.1.1.3	Sustaining Systems Operation
30.1.1.4	Display Recording and Playback

ISSS Functional Description Organization
Fig. 30-3

(1) The data communications subsystem provides essential data to the operational consoles.

(a) The LCN, primary, uses redundant data paths and the Institute of Electrical and Electronic Engineering (IEEE) 802,5 standard.

(b) The Backup Communications Network (BCN), secondary, uses the IEEE 802.3 standard.

(2) The console cluster is the entire complement of sector suite CC's that are attached to the data communications subsystems.

(3) The monitor and control subsystem allows the system engineer, to monitor performance and control the configuration of operational AAS elements.

(4) The central cluster subsystem provides record and playback capabilities for LCN and all display data, including batch processing and dynamic simulation (DYSIM) operations.

(5) The 3083BX HCS with NAS Stage A operational software and hardware system modifications to include PAMRI. This subsystem provides the basic ATC processing to interface with the external world and support ISSS functionality. NAS Stage A software provides all current PVD capabilities, the ISSS interface support, and expanded functionality to achieve ISSS capabilities, see paragraph 30.1.1.b.

(6) The DARC system with unmodified software, and hardware modifications necessary to operate with both existing radar display channel (RDC) equipment and BCN with the DARC HCS/CC bidirectional data interface.

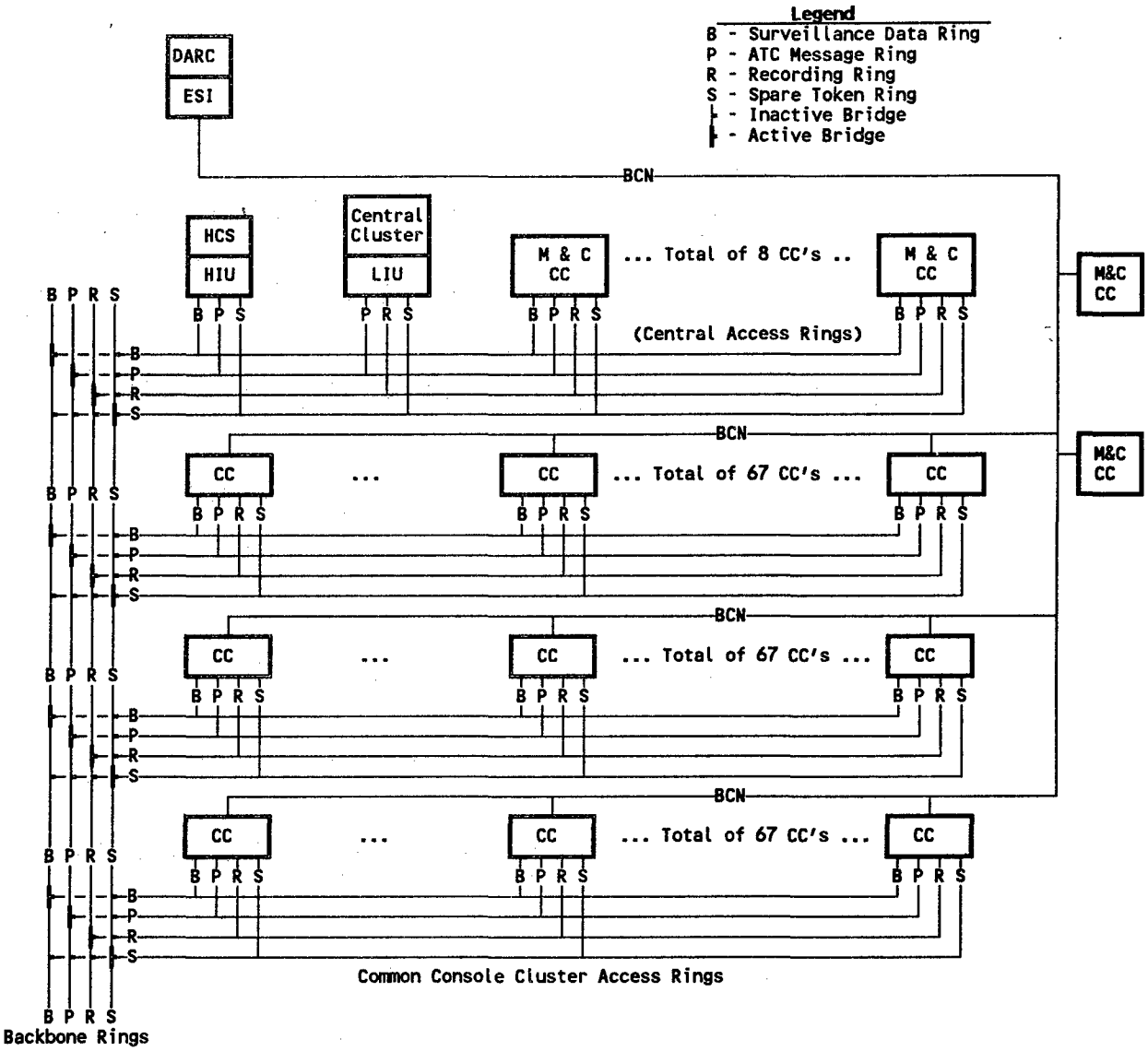

ISSS Data Communication Configuration
Fig. 30-4

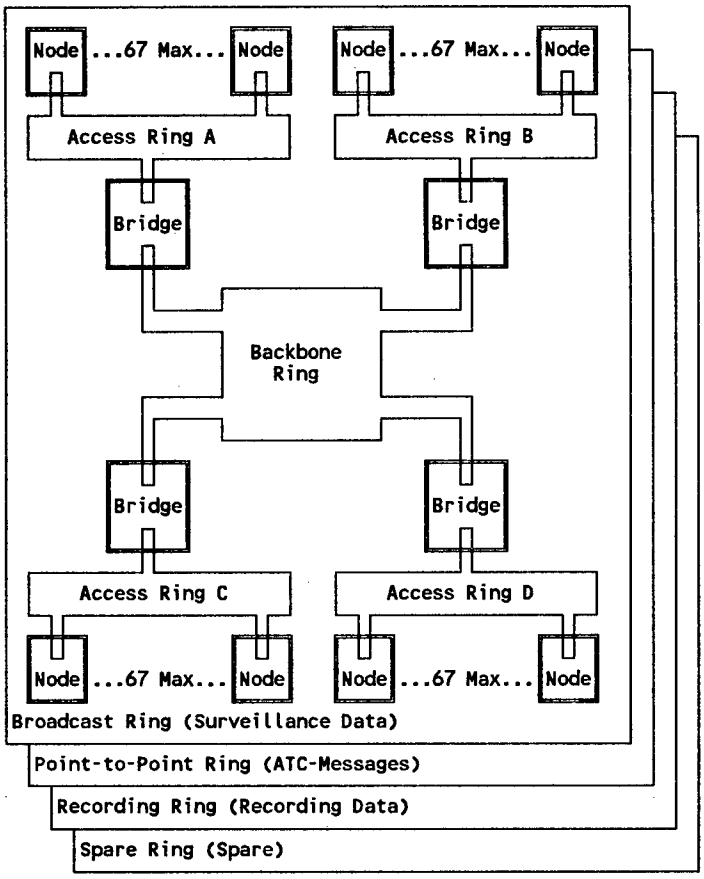

IBM Multiple-bridge Local Area Network
Fig. 30-5

b. The ISSS provides all existing functions available to the PVD controller work stations, at the time of its implementation, plus a subset of new capabilities provided in the full AAS.[3] The ISSS replaces flight data input/output capabilities of existing computer update equipment (CUE) and flight strip printer (FSP) equipment. The ISSS provides equivalent capabilities using data entry and display devices of the sector suite. The CC's and the LCN are initially installed at ARTCC's in a new operations area adjacent to the existing control room.[4] A sector suite may consist of one to four CC's. For ISSS, sectors will nominally consist of two or three consoles. The number of consoles depends on traffic load, sector logical display requirements, sector status (combined/decombined), and other operational factors. The number of consoles assigned to a sector can be dynamically changed with a supervisory message.[5]

c. The ISSS uses an architecture of LCN rings shown in figure 30-4. Bridging circuits are used to connect access rings to a backbone ring. The LCN, by design, is made up of four physically identical sets of local area network (LAN) rings as shown in figure 30-4. Each LAN ring provides a separate data service. The rings are the token type, named after the node addressing method of token passing. One ring carries surveillance data, a second flight data, a third, data to be recorded, and the fourth is designated as spare. The spare performs the function of any other if necessary. Each LAN ring is a continuous loop of daisy chain cable connecting all of the LAN components called nodes and bridges.

Each CC is a node on each LAN ring within an access organized into the required number of access rings to support the CC's for that ARTCC. Four access rings are considered to be the number required to support the largest ARTCC. More can be arranged, but are not planned. The DYSIM CC's are organized on a separate access ring. The HCS, central cluster processors (Falcon), and maintenance and control system are organized on one access ring. The central cluster processors are nodes on the central access ring and are attached to the LCN with LCN interface units (LIU). Refer to paragraph 31.2.1 for a more detailed discussion of LCN components. The 3083BX HCS processors are nodes on the central access ring and are attached to the LCN with LIU called Host interface units (HIU) because they are dedicated to the HCS. Bridges provide logical data connection between rings, and a reconfiguration capability in case of failures.

30.1.1.1 <u>Data Display</u>. The ISSS displays data on the CC physical displays, i.e., the main display and the auxiliary display. Data on the physical displays is organized into logical displays. A logical display or portion of a logical display (window) can be displayed on any designated portion of a physical display surface (viewport). A logical display is a collection of related data. The logical display requirements for each position type are contained in figure 30-6,[6] and the functions of these logical displays are described in the following subparagraphs.[7] Facilities still have some latitude on the presentation and contents of data displays through the National Patch Library case files.

30.1.1.1.1 <u>Situation Display</u>. The logical collection of data called the situation display presents the plan view of a geographic area of concern. The situation display

LOGICAL DISPLAY	EN ROUTE CONTROL POSITION	TFC MGMT POS	AREA SUPER POS	AREA MGR POS
Situation Display	X	note 1 X	note 1 X	X
Flight Data Display	X	note 2 X	note 2 X	
Aeronautical and Meteorological Data Display	X	X	X	X
Special List Display	X	X	X	X
Message Composition and Response Display	X	X	X	X
Static Information Display	X	X	X	X
Controller Note-pad Display	X	X	X	X
Suppressed Display List Display	X		X	X
Alert and Resolution Display	X	X	X	X
Traffic Management Situation Display		X	X	X
Traffic Management Flight Data Display		X	X	X
Traffic Management Coordinator Display		X	X	X
Automatic Traffic Count Display		X	X	X
Conflict Alert Immediate Summary Display			X	X

note 1 This position can call up the situation display of any designated en route position.

note 2 This position can call up the flight data display of any designated en route position.

Controller and Supervisory Position Logical Displays Figure 30-6

shows the real-time positions and other information about aircraft targets within a geographic area.[8]

30.1.1.1.1.1 Geographic Area of Concern. The ISSS provides for selecting the geographic area to be shown on the situation display.[9]

30.1.1.1.1.2 Target and Track Data and Symbology. The ISSS provides the following new target and track symbology features:[10]

a. The full data block and track position symbol provide the following new features:[11]

(1) Aircraft type.

(2) Heavy jet indicator.

(3) Entry/exit/overflight indicator.

(4) Destination airport.

(5) Minimum safe altitude warning (MSAW) and conflict alert (CA) suppression indicator.

(6) Scratch pad data consisting of up to eight controller entered characters.

(7) Mode S and Mode S data link indicators.

(8) Controlling sector or facility indicator. The controlling sector or facility identification is shown within the leader line, or data block.[12]

(9) Pointout indicator.

(a) The receiving sector's pointout indicator shows the initiating sector's identification.

(b) The initiating sector's pointout indicator shows the receiving sector's identification and either an acceptance or a rejection.

(10) Handoff alert indication. The handoff alert indication denotes any of the following conditions:

(a) Automatically initiated handoffs are not accepted after a parameter period of time.

(b) The automatic handoff function is inhibited for the track.

(c) A track inhibited from automatic handoff crosses the sector boundary and no handoff or pointout is accepted by the sector receiving the handoff or pointout.

(11) Visual Flight Rules (VFR) indicator.

b. When aircraft are holding at an adapted fix and associated full data blocks are suppressed from display. The full data block is displayed automatically when the aircraft exits the holding pattern. Holding pattern templates which are dependent on altitude and aircraft performance characteristics, are adapted for specific site holding fixes.[13]

30.1.1.1.1.3 **Track Vector**. Each track displays a vector identical to the PVD display which shows:

a. The distance the aircraft is predicted to travel in a controller selectable number of minutes from zero up to an adaptable maximum value.

b. The distance selected in miles along the projected heading of the aircraft.[14]

30.1.1.1.1.4 **Route Display**. The ISSS route display is similar to PVD route display. The amount of route displayed is selected by the controller in minutes of flight time.[15]

30.1.1.1.1.5 **Longitudinal Scale**. The ISSS provides a movable, background, longitudinal scale. The scale represents zero to 20 miles as selected by the controller. The scale is presented in the coordinate system that corresponds to the range setting of the display.[16]

30.1.1.1.1.6 **Aircraft Halo**. The ISSS provides controller selection of the size of the track halo for all tracks and individual tracks.[17]

30.1.1.1.1.7 **DARC Display**. When the situation display is generated from DARC provided data, the presentation is identical in format and content to the DARC generated PVD presentation, except for the message preview and response area.[18]

30.1.1.1.2 **Flight Data Display**. The ISSS replaces the paper flight progress strips used with the PVD display system. ISSS presents flight information in an electronic flight strip called a Flight Data Entry (FDE). Figure 30-7 shows the 46 possible fields in a FDE and the number of symbol spaces allocated to each field.[19]

The Flight Data Display contains FDE's for:

a. Aircraft under control of the sector.

b. Aircraft not yet under control of the sector.

c. Aircraft of interest to the sector.

The fields in the FDE's and the field arrangement of FDE's are established by adaptation tailored to sector requirements. The controller can select a format for all FDE's, different formats for all FDE's in each posting list, and/or a different format for a particular FDE from the 10 formats available at the operational position.[20]

30.1.1.1.2.1 **Managing Flight Data Entries**. There are several types of flight data entries such as En Route, Departure, and Proposal. FDE's are posted in various lists available to the controller such as the Flight Data Area, Information List, Hold List, and Release List. The controller moves FDE's within and among the various sector posting lists. There are five techniques for managing FDE's: posting, ordering, suppression, deletion, and updating.[21]

Field Name	Symbols	Field Name	Symbols
Actual Departure Time	4	Heavy Jet Indicator	1
Aircraft Type	4	IFR/VFR Indicator	1
Altitude Nonconform Indicator	1	Indicated Air Speed	4
Alternative Destination	5	Interim Altitude	7
Arrival/Departure Arrow	1	Lateral Nonconform Indicator	1
Assigned Altitude	26	Mach Speed	4
Beacon Code	4	Metering/TM Advisory	50
Call Sign	8	Metering/TM Advisory Indicator	1
Computer Identification	3	Mode-C Altitude	3
Control Information	12 note 1	Next Posted Fix	12
Controlling Facility	3	Next Sector/Facility	4
Controlling Sector	3	NOPAR Indicator	1
Coordination Indicator	3	Number of Aircraft	2
CTA at Next Posted Fix	4	Posted Fix	12
CTA at Posted Fix	4	Previous Posted Fix	12
CTA at Previous Fix	4	Proposed Departure Time	4
Departure Point	12	Remarks Indicator	1
Destination	12	Reported Altitude	7
Equipment Qualifier	3	Requested Altitude	7
Estimated Elapsed time to Destination	4	Route Information note 2	140
Estimated Ground Speed	4	Runway	3
Estimated Time Arrival	4	Time At Previous Fix	4
Expected Departure Clear Time	4	True Airspeed	4

note 1 Based on contractors design.
note 2 Includes preferential route, route of flight, and remarks. Data base accommodates 1510 symbols.

FDE Fields and Symbol Spaces
Fig. 30-7

30.1.1.1.2.1.1 **Posting**. FDE's first appear at a sector in the Flight Data Area in either of two ways according to controller selection:[22]

a. FDE's are automatically posted and EMPHASIZED and remain in that state until the controller explicitly acknowledges each FDE.

b. FDE's are automatically posted without emphasis and no controller acknowledgment is required.

30.1.1.1.2.1.2 **Ordering**. FDE's are ordered either automatically or manually according to controller selection. Each FDE list is under separate ordering control. When ordered automatically, the FDE's are sorted in either ascending or descending order according to specified fields of the FDE's. When the list is sorted manually, the FDE's are ordered according to controller command for each FDE.[23]

30.1.1.1.2.1.3 **Suppression**. The suppression of the display of individual FDE's is controlled:[24]

a. Automatically by the expiration of an adaptable time limit after acceptance of a handoff by another sector. The automatic suppression feature can be deselected by the controller.

b. Manually by a controller suppression action.

30.1.1.1.2.1.4 **Deletion**. FDE's are deleted as a result of a flight plan deletion or the processing of the flight plan due to an amendment message. The controller can select to have deletions manually acknowledged before deletion.[25]

30.1.1.1.2.1.5 **Updating**. Fields within the FDE are updated by the system in response to direct modifications of the flight data fields or system processing of flight changes. The controller selects one of three options for the control of updating each of the fields within the FDE:[26]

a. The system automatically updates the field and emphasizes the new data. The emphasis is discontinued after controller acknowledgment of the new information.

b. The system automatically updates the field and emphasizes the new data. The emphasis is discontinued after a parameter time period.

c. The system shows the new data in the Flight Data Readout Area before updating the FDE. After controller acknowledgment, the system updates the FDE.

30.1.1.1.2.2 **Annotating Flight Data Entries**. The ISSS provides for the display and deletion of flight data entry notations (FDEN) in certain FDE fields, similar to today's strip marking. These notations consist of alphanumerics, data emphasis, and specialized symbols. The ISSS provides for automatic generation of FDEN's under certain conditions. FDEN's do not interfere with their associated data field or with other FDEN's. Unless otherwise noted FDEN's are displayed only at the sector position with jurisdictional track control. FDEN's are deleted when the symbolized condition passes or by controller action. ISSS provides for FDEN's under the following conditions:[27]

a. **Exception Code**. FDEN's uniquely denote exception beacon codes such as 7700 and 7600. These FDEN's are automatically generated and displayed at all operational positions with the associated FDE.

b. **Warning**. FDEN's denote conflict alert and minimum safe altitude warnings. These FDEN's are automatically generated.

c. **Flight Status**. FDEN's indicate transfer of track control. FDEN's indicate the status of radar service.

(1) Absence of an FDEN indicates that radar service is not yet established.

(2) An FDEN indicates that radar service is being provided.

(3) An FDEN indicates termination or loss of radar service.

FDEN's are automatically generated for these cases except for subparagraph c(3). The FDEN for termination or loss of radar service is displayed upon controller entry only.

d. **Pointout**. FDEN's uniquely indicate that a data block pointout to another sector or facility is initiated, accepted, or rejected. These FDEN's include the receiving sector or facility identification. These FDEN's are provided upon controller FDEN entry.[28]

e. **Route**. FDEN's uniquely denote radar vector heading and direct route clearances, distance

measuring equipment arc, and radius clearances. All of this category of FDEN's are displayable simultaneously. These FDEN's are generated upon controller entry and are automatically transferred to the next sector with a handoff.

f. **Forward.** FDEN's indicate that data fields have not been forwarded to required sectors or facilities including the identification of the sector or facility. These FDEN's are automatically generated.

g. **Assigned Altitude.** FDEN's uniquely indicate:

(1) Verified assigned altitudes.

(2) Altitude restrictions.

(3) Assigned altitude inappropriate for the direction of flight.

(4) Fix crossing time.

All of these FDEN's are displayable simultaneously. Subparagraphs g(1) and (4) are generated upon controller entry. FDEN's indicating an assigned altitude restriction are generated at the entering position when the controller enters an altitude restriction message. The FDEN for inappropriately assigned altitude for the direction of flight is automatically generated and displayed at only those sectors for which the altitude is inappropriate. Upon controller entry, it includes an indicator of approval by the next sector.

h. **Reported Altitude.** These FDEN's uniquely indicate:

(1) A controller request for a pilot report upon reaching or leaving an altitude.

(2) An altitude is reached or vacated.

(3) A pilot reported altitude different from the assigned altitude.

The above are generated when the controller enters a message.

i. **Clearances.** FDEN's indicate a record of clearances and instructions delivered to the pilot. Based upon the type of clearance such as speed, altitude, or route, the ISSS associates the FDEN with the appropriate FDE field. All of these FDEN's are displayable simultaneously. These FDEN's are generated upon controller entry.

j. **Assigned Speed.** An assigned speed restriction, denoted by an FDEN, is generated upon controller request and automatically transferred with the flight handoff.

k. **Unassigned Fix.** An FDEN indicates the next fix entered in a progress report is not on the assigned route. This FDEN is deleted when:

(1) A new position report shows that the flight is on the assigned route.

(2) The route is amended to conform to the next fix.

l. **Hold.** An FDEN indicates that a flight is issued a holding clearance. The controller has the option of entering the holding instructions with the FDEN. The FDEN is generated when the hold message is entered and deleted when the holding action is terminated.

m. **Future Action.** An FDEN indicates that future action is required with respect to the field tagged with the FDEN. This FDEN is generated by controller request.

n. **Frequency.** An FDEN indicates that a flight is changed to the next radio frequency. This FDEN includes, at the controller's option, the new frequency and the time of the change. This FDEN is generated by controller entry.

o. **Instrument Flight Rules (IFR) Cancellation.** An FDEN, generated on controller request, denotes cancellation of an IFR flight plan.

p. **Time.** An FDEN uniquely denotes arrival time and clearance void time. These FDEN's are displayed upon controller FDEN entry.

q. **Posted Fix.** These FDEN's associated with the Posted Fix field uniquely denote the pilot estimate and the actual time at this fix. These FDEN's are generated and displayed automatically when the controller enters a progress report which contains these coordination times. All of these FDEN's are displayable simultaneously.

r. Next Fix. An FDEN associated with the next fix field denotes the pilot estimate for the next fix. This FDEN is generated and displayed automatically when the controller inputs a progress report which contains the coordination time.

s. **Severe Weather Avoidance Procedure/Program (SWAP).** An FDEN associated with the route field denotes a SWAP referential route. The route field associated with the FDEN provides for display of both the SWAP or preferential route and the associated segment of the filed flight plan route. The SWAP or preferential route is emphasized. This FDEN is displayed at the sector prior to the first sector where the SWAP or preferential route applies, even when this sector is in a different ARTCC.

30.1.1.1.3 Aeronautical and Meteorological Display. The ISSS provides for display of any Aeronautical and Meteorological (A&M) data available at the time of the ISSS implementation. ISSS permits posting, ordering, updating, deleting, and formatting entries in the A&M data display. These data are summarized in figure 30-8.[29] The references to "per station" and "per grid points" refer to individual weather reporting stations and reported grid points respectively.

FIELD NAME	MAX CHARACTERS
Surface Observation	160 per station
Terminal Forecast	250 per station
Grid Winds and Temperatures Aloft	15 per grid point
Altimeter Setting	4 per station
Minimum Assignable Flight Level	3 per station
PIREP	300
Center Weather Advisory	400
SIGMET	750
Convective SIGMET	3000
AIRMET	850
Hurricane Advisory	1000
Area Forecast	3500
Meteorological Impact Statement	400
Convective Outlook	2000
Notams	2014
General Information	400

A&M Data Fields
Fig. 30-8

30.1.1.1.4 Special Lists Display. The ISSS presents the following lists:[30]

a. Departure.

b. Inbound.

c. Hold.

d. VFR Inhibit.

e. Auto Handoff Inhibit.

f. Metering Advisory.

g. Beacon Code.

h. Group Suppression.

Subparagraphs a through g present the same information as that presented by the Host computer system at the time of ISSS implementation except that subparagraph g presents only manually entered beacon codes. The ISSS uses emphasis for new data in lists. The data remains emphasized for an adapted period or until the controller deselects the emphasis. The controller can emphasize selected data items. The group suppression list contains a list of the numbers of all the groups suppressed at the sector and the sector number of all other sectors suppressing that group. This list is presented in ascending order. The controller can request the call sign of all aircraft in any group.[31]

30.1.1.1.5 Message Composition and Response Display. The ISSS provides a message composition display area for previewing messages as they are composed with the keyboard, or cursor position selection device. A preview area allows the controller to see messages as they are being composed. The message response display contains information that is a response to a query made by the controller such as a flight plan readout. The message response area is used for data that is needed for just a short time. The ISSS provides methods for saving some data for longer periods such as the A&M (see paragraph 30.1.1.1.3) data display. This logical display provides general information messages which exist at the time of ISSS implementation.[32]

30.1.1.1.6 Static Information Display. ISSS static information displays provide the following data types:[33]

a. Graphic.

(1) Controller charts.

(2) Sectional aeronautical charts. Sectional aeronautical charts printed in colors are displayed in colors.

(3) Instrument approach procedures.

(4) Standard terminal arrival routes/profile descent.

(5) Standard instrument arrival/departure procedures.

(6) Substitute routing.

b. Textual.

(1) Airman's information manual.

(2) Orders 7110.65, Air Traffic Control, 7210.3, Facility Operation and Administration, and 7610.4, Special Military Operations.

(3) Standard operating procedures.

(4) Letters of agreement.

(5) Position check lists.

(6) Navigational aid/sector frequencies.

The ISSS provides several features for viewing textual items such as page forward or backward, search on a controller defined character string, continuous scroll, and selection from an index or table. Dimensions of controller chart objects on the physical display are not less than the dimensions of those same objects on the National Ocean Service (NOS) hard copy charts. The FAA and NOS are working to create an electronic data base of chart information. These data are to become a part of the ACT central support function accessible by all ARTCC's. Adaptation defined portions of charts are selectable for display. To cover a total sector, a sector's chart may be displayed on more than one auxiliary display within a sector suite. Static displays are available for viewing on any display surface in a sector suite; they are not restricted to the auxiliary display.

30.1.1.1.7 Controller Notepad Display. The ISSS provides for controller entered free form text notes.[34]

30.1.1.1.8 Suppressed Display List Display. ISSS provides display of a currently suppressed displays list.[35]

30.1.1.1.9 Alert and Resolution Display. Conflict alerts, conflict resolution advisories, minimum safe altitude warnings, and emergencies are displayed in the Alert and Resolution (A&R) display in a list with the call sign, alert condition, and computer generated resolution. The list entries are displayed until the alert condition no longer exists or the controller suppresses the display. These alerts may also be shown on the situation display and flight data display.[36]

30.1.1.1.10 Traffic Management Situation Display. This is the plan view of a geographic area of concern to a traffic management coordinator or supervisor. This has the same capabilities as the situation display, see paragraph 30.1.1.1.1. ISSS provides a capability to select display categories for flights using selection criteria provided by the Host at the time of ISSS installation. These categories include:

a. All controller tracked aircraft.

b. Aircraft going to a designated airport.

c. Aircraft within specified altitudes.[37]

30.1.1.1.11 Traffic Management Flight Data Display. This display is identical to the display defined in paragraph 30.1.1.1.2 except that the traffic management specialist can request posting of lists of FDE's in certain categories. These categories are provided by the Host at the time of ISSS installation and will include:

a. All aircraft going to a designated airport.

b. All aircraft within designated altitude limits.

30.1.1.1.12 Traffic Management Coordinator Display. This display contains lists of information for quick scanning by traffic management coordinators. The lists provided by the Host include: arrival metering list and general metering list. The arrival metering list will display airport acceptance rates and metering advisory lists. The general metering list displays advisory data on aircraft subject to metering or flow restriction.[38]

30.1.1.2 Data Entry. The ISSS accommodates entry of all messages enterable via computer entry devices (CED) or data entry controls (DEC) at the time of ISSS installation. All supervisory messages applicable to the Host or DARC are enterable at input devices used prior to ISSS implementation. There is a Configuration Control Board (CCB) approved [but not in the System Level Specification (SLS)] change to allow keyboard video display terminal (KVDT) emulation/supervisory message input and display on CC's during ISSS. Messages are composed and entered in identical format in both normal operations with the HCS and in autonomous operations with the DARC system.[39]

30.1.1.2.1 Supervisory and Maintenance Consoles. The ISSS provides data entry and display capability to allow the sector suite to be used as a "see-all" maintenance

console, a "see-all" supervisory console (area manager), and as a DYSIM training console for DYSIM pilot data entry. The "see-all" capability applies for HCS and DARC generated data.[40] This capability is provided for four positions to allow the site to adapt the capabilities that are now in the present NAS.

30.1.1.2.2 Detached Console Training (DCT). The ISSS provides a DCT function. The DCT function provides CHI training at any CC. This includes CC's on the operational floor when so configured and detached from the LCN. The DCT provides training scenarios, progressing from simple practice of new input messages and manipulation of flight data entries, to being able to recognize and use new data formats. These scenarios use all message formats and all logical display formats. The DCT is capable of operating in a CC that is not attached to the LCN. The DCT should not be confused with DYSIM which is a separate and complete training system with its own LCN access ring. When the DCT CC is configured to the LCN, no hardware modifications are required. The DCT collects the following student data:

a. Student identification.

b. Lesson identification.

c. Lesson start time.

d. Input errors.

e. Lesson stop time.

f. Lesson status indicator.

g. Lesson complete indicator.

The generated student data is retrievable on a CC display surface when the CC is not attached to an LCN. When the CC is connected to the LCN, the student data can be recorded and stored for subsequent transfer to the AAS automated training system (AATS).[41]

30.1.1.2.3 En Route Control Position. The en route control position accommodates one-, two-, and three-person operation. Each position must accommodate an additional person behind each seated person.[42]

30.1.1.2.3.1 One-Person Operation. The following logical displays (see paragraph 30.1.1.1) are always presented to the controller:

a. Situation display.

b. Alert and resolution display.

c. Message composition and response display.

d. Flight data display.

e. Static information display.

Display control and data entries associated with these logical displays are enterable through any of the CC's in the sector suite.[43]

30.1.1.2.3.2 Two- and Three-Person Operation. The following applies to two- and three- person operations.

a. When more than one person is operating a sector suite the following logical displays are always presented to the R-controller:[44]

(1) Situation display.

(2) Message composition and response display.

(3) Alert and resolution display.

(4) Static information display.

b. The following logical displays are always presented to the D-controller:

(1) Flight data display.

(2) Alert and resolution display.

(3) Message composition and response display.

c. The alert and resolution display and the message composition and response display for the D-controller are on separate physical devices than the same logical displays for the R-controller because in general they contain different information.

d. The third controller (tracker/coordinator) in a three-person operation has access to yet another message composition and response display on yet another physical device.

e. Logical displays are presented to each controller upon request. Associated display control and data entry is affected through any CC of the sector suite. Simultaneous message entry at all positions is accommodated.

30.1.1.3 Sustaining System Operations. This paragraph and its subparagraphs address functions that assure that the ISSS capabilities for air traffic are continuously available. Figure 30-9 identifies the major subdivisions of the subject and their paragraph numbers.

Par #	Sustaining Operations Subdivisions
30.1.1.3.1	Resource Allocation and Control
30.1.1.3.2	Communications
30.1.1.3.3	System Integrity
30.1.1.3.4	Message Generation
30.1.1.3.5	Input Message Processing
30.1.1.3.6	Sign-On, Sign-Off Processing
30.1.1.3.7	Display Preference Set Processing

Subdivisions of Sustaining Systems Operations
Fig. 30-9

30.1.1.3.1 Resource Allocation and Control. The ISSS provides the resources to support:

a. The execution of functional capabilities.

b. Performance requirements.

c. Reliability, maintainability, and availability requirements.

d. Interface requirements.[45]

30.1.1.3.1.1 Scheduling Processes. The ISSS initiates and terminates processes necessary to the activities listed in paragraph 30.1.1.3.1 identified as resource allocation and control . Activation of a process includes the necessary steps to ready a process and the actual process triggering. The ISSS detects when a process exceeds predetermined time limits, takes remedial action, and displays the condition at the monitor and control console. The ISSS provides for orderly termination and release of all resources allocated to the process. The ISSS provides for suspension and later resumption of a process. The ISSS provides for recording the initiation, suspension, resumption, and termination of a process.[46]

30.1.1.3.1.2 Control and Allocation of Storage. The ISSS controls and allocates use of ISSS storage. ISSS maintains a record of the process currently in control of each portion of shared storage and the time of control. ISSS dynamically invokes storage allocation as a part of process initiation. The ISSS ensures validity of data in storage by enforcing utilization of storage by process. ISSS records any change in the status of storage.[47]

30.1.1.3.1.3 Control of Data Base. The ISSS ensures a valid data base and precludes unauthorized access to the data base. Key system parameters are monitored to ensure validity.[48]

30.1.1.3.1.4 Control and Allocation of Peripheral Devices. The ISSS schedules usage and executes device operations requests by process. Contending requests are resolved and ATC services provided within timing requirements.[49] The change of status of input/output (I/O) devices is recorded by the ISSS.[50]

30.1.1.3.2 Communications. The ISSS controls the message traffic originated by or addressed to the ISSS.

30.1.1.3.2.1 Execution of I/O Communications. The ISSS accepts process communications requests, sets priorities, and executes communications requests. All I/O operations are recorded by the ISSS.[51]

30.1.1.3.2.2 Communications Error Recovery. The ISSS detects communications errors. The ISSS then verifies the condition and removes reconfigurable resources from the ATC configuration. When needed, a replacement resource is configured into the system. Thus, the ISSS automatically selects alternate means. The ISSS uses alternate paths to successfully complete I/O operations necessary to system functions.[52]

30.1.1.3.3 System Integrity. The ISSS provides safeguards to support continuous control of air traffic.[53] The ISSS provides continuous support through 15 major functional areas described in the following subparagraphs. These functional areas are summarized in fig. 30-10.

Par #	Major Functional Areas of System Integrity
30.1.1.3.3.1	Transition
30.1.1.3.3.2	Fallback Capability
30.1.1.3.3.3	Autonomous Operation
30.1.1.3.3.4	Host Startup and Startover
30.1.1.3.3.5	Initialization of System Operations
30.1.1.3.3.6	Monitoring Performance
30.1.1.3.3.7	Detection of Failures
30.1.1.3.3.8	Automatic Reconfiguration
30.1.1.3.3.9	Manual Reconfiguration
30.1.1.3.3.10	Performance of Manual Tests and Certification
30.1.1.3.3.11	Performance of Periodic Tests
30.1.1.3.3.12	System Security
30.1.1.3.3.13	Monitor and Control Position
30.1.1.3.3.14	Recording Data
30.1.1.3.3.15	Reduction and Analysis of System Data

Major Functional Areas of System Integrity
Fig. 30-10

30.1.1.3.3.1 Transition. ISSS implementation and shakedown is to be accomplished with a new release of HCS NAS software. This software provides for ATC operations from selected ARTCC sectors (CC's) in the new control room with the remainder of the sectors controlled in the old control room on PVD's. The supporting transition scenario is referred to as a sector-by-sector transition. Each operational sector (sector suite) in the new control room corresponds to an operational sector

on PVD equipment in the old control room. During the shakedown OUTPUT data is provided to ALL POSITIONS in BOTH control rooms, but INPUT is allowed only from the sector (CC's or PVD's) having the control responsibility for the particular sector airspace. To accomplish the transition, supervisory keyboard entries are made to individually configure sectors. This requires separate keyboard entries for the HCS/ DARC and the VSCS. The transition does not require cabling or patch panel reconfigurations, see paragraph 83.6.

30.1.1.3.3.2 **Fallback Capability**. After operational transition to the ISSS, the PVD's and associated equipment are retained for a short period as a fallback for ATC.[54] The sector by sector transition strategy provides for ATC operations from either the sector suite or the PVD and their associated equipments. This provision allows the capability to return ATC operations to the PVD sectors until confidence in the sector suite equipment is established. All capabilities of the old PVD are retained and are available when the PVD's are selected to support ATC.[55]

a. The ISSS provides two features that support use of the PVD's as a backup system:

(1) Consistent Flight Plan Data. A data path to transfer the flight plan data base from one Host processor to the other is provided at the time of ISSS installation as Government furnished property (GFP). This process, called the Flight Plan Communication Link (FPCL), used when ATC operations are switched from one Host processor to the other when different versions of operational software exist in each of the two processors (such as during testing).

(2) Flight Strip Printing. Until the old control room equipment is removed, the ISSS provides the capability to print flight strips with all amendments at appropriate positions in the old control room. This capability is enabled or disabled with a single ISSS supervisory message. When enabled, all current flight strips are printed.[56]

b. Once confidence is established in the ISSS, the PVD system is removed. Removal and its timing are discussed in paragraph 95.

30.1.1.3.3.3 **Autonomous Operation**. The ISSS provides the capability to operate autonomously from the HCS. This provides the continuation of radar data and limited flight data to the controller when the HCS is not available. The capability to present a DARC generated display is available in autonomous operation.[57] Additional information about DARC and autonomous operation is presented in paragraphs 30.1.2 and 30.2.1.

30.1.1.3.3.4 **Host Startup and Startover**. The ISSS provides sustained operations during and after all modes of startup and startover of the HCS.[58]

30.1.1.3.3.5 **Initialization of System Operations**. The ISSS determines system resource availability, initializes to a predefined state, and establishes connectivity.[59]

30.1.1.3.3.6 **Monitoring Performance**. The ISSS continuously monitors utilization of system resources for statistical analysis. The following data are recorded and correlated to the ISSS load.[60]

a. Processor utilization.

b. Channel utilization.

c. Memory utilization.

d. Software utilization.

e. Processor utilization by:

(1) Software.

(2) Number of interrupts.

(3) Frequency of interrupts.

30.1.1.3.3.7 **Detection of Failures**. The ISSS automatically detects any failure in any system resource. When the maintenance of the current mode of operation requires reconfiguration, the ISSS triggers automatic reconfiguration.[61]

30.1.1.3.3.8 **Automatic Reconfiguration**. Where redundant resources are provided in the system, the ISSS automatically reconfigures available resources to replace resources lost due to equipment failure.[62]

30.1.1.3.3.9 **Manual Reconfiguration**. The ISSS accepts manual reconfiguration commands.[63]

30.1.1.3.3.10 **Performance of Manual Tests and Certification**. The ISSS:

a. Accepts commands to test hardware and software.

b. Performs tests to the level required for certification.

c. Reports the results of tests to the device where the command was entered.[64]

30.1.1.3.3.11 Performance of Periodic Tests. The ISSS automatically performs real-time periodic tests on software and hardware. When these tests verify the presence of out-of-tolerance conditions, the ISSS triggers automatic reconfiguration.[65]

30.1.1.3.3.12 System Security. The ISSS protects all information within the ISSS. Hardware components are protected from unauthorized manipulation. The ISSS provides user access verification, designed to preclude unauthorized user entry. Automatically or manually initiated activities are prevented from denying service to ISSS users. All system entries and attempted system entries are recorded.[66]

30.1.1.3.3.13 Monitor and Control Position. The ISSS provides a centralized position for monitor and control (M&C) of ISSS system status, configurations, and performance data. The M&C position provides for manual entry of ISSS commands for system control and reconfiguration. "This position may be physically integrated with equipment used to provide similar capabilities for other systems in the ARTCC. Existing equipment which is part of systems incorporated in ISSS or with which ISSS interfaces may be utilized in satisfying this requirement."[67] The M&C position is co-locatable with the maintenance CC that can be used to provide a "see-all" capability for Host and DARC generated data.[68] The M&C position is located in the same area as the maintenance control center processor/maintenance monitor console (MCCP/MMC) work stations and other system engineer equipment. All AAS system monitoring and control logic resides in the M&C consoles. One LCN M&C console and one BCN M&C console is in control of respective networks, with a backup LCN M&C console and a backup BCN M&C console monitoring respective primary M&C's to take control in case of failure. Central processors do not play a part in system M&C. Refer to paragraph 31.3 E-Complex, for additional information.

30.1.1.3.3.14 Recording Data. The ISSS records:

a. Significant system events and associated system state.

b. Workload of system components.

c. Use of system resources.

d. All system inputs.

e. All system outputs.

f. All error and abnormal condition reports.

g. Changes in resource monitoring and recording selection parameters.

h. System status and configuration data such as:

(1) Performance data.

(2) Resource utilization.

(3) External load data.

The recorded data is used for off line analysis and evaluation of system performance defined in paragraph 30.1.1.3.3.15. Existing recording capabilities provided by the NAS Stage A software satisfy this requirement as it applies to the Host system and DARC.

30.1.1.3.3.14.1 ISSS Recording Control Features. The ISSS provides for the selection for recording of internal, dynamic, system data. Data can be selected for recording from tables, buffers, queues, files, registers, and stacks. The selected data is capable of being recorded on a periodic basis. Selected memory areas and internal state information is recorded when errors or abnormal conditions are detected. Data categories, items for recording, and conditions for recording are defined through adaptation. ISSS provides the option, under supervisory message control, of terminating recording on all current recording storage media simultaneously while providing continued recording without loss of data onto new storage media.[69]

30.1.1.3.3.14.2 Host and DARC Data Recording. ISSS software modifications in NAS Stage A do not reduce current data recording in Host. ISSS does not modify NAS Stage A recording software in the HCS or DARC to meet requirements for ISSS data recording.[70] Instead, a new set of hardware called the Display Recording and Playback System (DRPS) is installed to handle requirements for CC display recording and playback, described in paragraph 30.1.1.4.

30.1.1.3.3.15 Reduction and Analysis of System Data. The ISSS provides new data reduction and analysis tools in addition to existing NAS Stage A data reduction and analysis tools which are not modified. The new tools accept recorded data from multiple media, including the NAS Stage A system analysis recordings (SAR). The new tool is capable of merging SAR data with data collected by

ISSS recordings. The new data reduction and analysis tools provide the following:

a. Decoded, hard-copy, tabular lists of selected recorded data.

b. Plots of geographically-oriented data.

c. A wide range of selection criteria such as:

(1) Time.

(2) Data type.

(3) Flight identity.

(4) Beacon code.

(5) Geographic area and volume.

(6) Data source and destination.

d. Logical combination of selection criteria.

e. Statistical analysis.

f. A report of all information recorded for a specific flight.

g. End-to-end response times for messages.

h. Processor response times.

i. Processor, device, storage, and LCN utilization.

j. LCN delays.

k. Reports on delay effects due to contention.

l. Message processing trace histories.

m. Durations of interrupt processing.

n. Disk operation statistics.[71]

30.1.1.3.4 Message Generation. The output capabilities associated with the requirements for sustaining system operations consist of diagnostic reports and status reports. Messages applicable to the specific system architecture are included in this requirement.[72]

30.1.1.3.5 Input Message Processing. The ISSS identifies and checks all messages received from the display and data entry subarea and all messages received from external interfaces before acceptance. Message checking before acceptance includes the following:

a. Source legality and eligibility checking.

b. Format checking.

c. Content and logic checking.

d. Context checking.

The ISSS rejects a message which fails these checks. The ISSS logs the message and rejection but takes no action based upon an incorrect message.[73]

30.1.1.3.6 Sign-On Sign-Off Processing. The ISSS provides for maintaining a sign-on/off record for each operational position. This record includes:

a. The user's unique identification number.

b. Time of sign-on.

c. Time of sign-off.

d. User's operational responsibility.

e. Optional invocation of controller's display preferences.[74]

30.1.1.3.7 Display Preference Set Processing. ISSS provides for establishing up to 10 controller preference sets for each controller. ISSS also provides selection of subsets of the 10 controller preference sets provided for each controller. Each preference set contains:

a. Location and size of logical display view-ports on physical displays.

b. Data item assignments to each brightness control group.

c. Selection of display characteristics such as symbol size.

d. Selection of posting, ordering, updating, deleting, and formatting options for each logical display.[75]

30.1.1.4 Display Recording and Playback. DRPS supports incident analysis, procedural analysis, search and rescue operations, and performance analysis. All CC display, control, and message entry data are recorded via the LCN recording ring. Data playback is accomplished through CC's independent of the recording function. ISSS

provides hard-copy printout of recorded display, control, and message entry data.[76]

30.1.2 DARC. DARC provides back-up radar processing services for PVD's and CC's in two modes of operation: DARC/NAS and DARC-only.

30.1.2.1 DARC/NAS. There two levels of operation in DARC/NAS mode. Level A is uni-directional where only flight data is passed from the HCS to the DARC. In level B, DARC exchanges flight and track data base information with the HCS over a bi-directional interface. Refer to figure 30-11. At the old

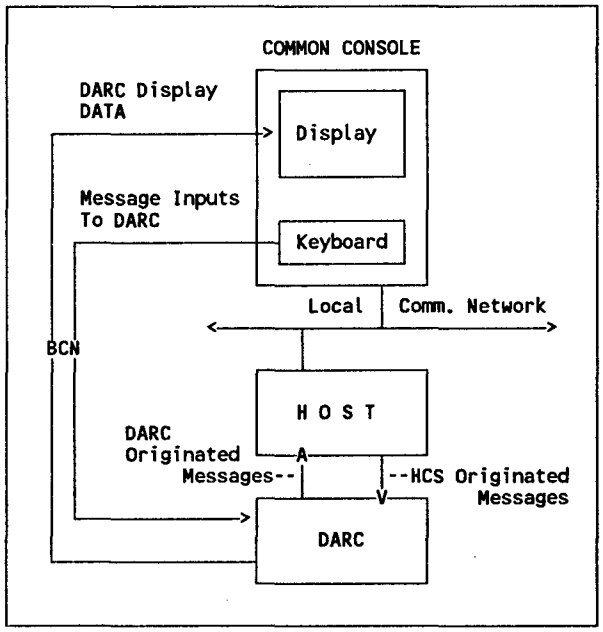

DARC Relationship to Host
Fig. 30-11

PVD positions, the controller switches situation displays and keyboards between HCS and DARC by a hardware switch located on the PVD. With the CC, the controller selects an area for displaying DARC situation data by entering a message at the CC. The CC keyboard is switched between HCS and DARC by entering a message at the CC. While the keyboard is switched to the HCS, the HCS processes the input messages and sends data base updates to DARC. While the keyboard is switched to DARC, DARC sends input messages to HCS as requests for processing. The HCS then responds back to DARC with an appropriate action. Both systems, (HCS & DARC) present flight information to controllers from consistent data bases.

30.1.2.2 DARC-Only Mode. When DARC detects an error condition on the DARC/HCS interface or when DARC is directed by supervisory message, DARC severs the interface with the HCS and reverts to DARC-only mode. The HCS will also sever the interface if it detects an error condition on the interface. DARC retains the flight data established while in the DARC/NAS mode. Controllers then update the DARC flight data base by manual data entry.

30.2 Equipment Configurations. The ISSS provides configurations of the major ATC components. The major components are:

a. Computers for radar data. HCS processors are available for normal ATC, Host A and Host B. In autonomous mode, neither provides radar data. DARC is used.

b. Display data source. A given configuration produces situation display data from either the HCS/LCN or DARC/BCN. The surveillance display source is selectable by either the controller in normal mode or by the CC display controller in a failure mode.

c. VSCS. VSCS is operated in one of two modes. In control mode, the VSCS is configured to permit controllers to transmit to and receive from controlled air traffic. In the shadow mode, the VSCS is configured to permit controllers to receive from air traffic and NOT transmit. Ground-to-ground communication is provided in both modes.

d. Local communications. CC's are physically connected to the LCN. CC's are logically configured into sector suites for ATC. CC's can be configured **off-line** for maintenance or detached console training. Configuration is controlled by M&C positions.

30.2.1 Autonomous Operation. During autonomous operation, the sector suite does not have access to the Host flight plan or radar data bases. DARC radar data generates the situation display. The sector suite is connected to the BCN, and may or may not be connected to the LCN. The CC presents flight data as FDE's. The sector suite retains flight plans that existed before entering autonomous operations.[77] Controllers enter new flight information manually and modify flight information manually. When FDE's are no longer current, controllers delete them manually. When the sectors transition from autonomous operations to full ISSS operation, the Host's flight data base is automatically updated with the flight data of controlling sector's CC's. For each sector's flight data, the sector receives an indication of successful Host update. If errors occur during this process, the CC provides error messages.[78] Autonomous operation provides the two modes described in the following subparagraphs.

30.2.1.1 Basic Autonomous Operation. In basic autonomous mode the sector suite is in stand-alone mode and does not have access to the HCS or to the LCN. The only connectivity available to the sector suite is the BCN. DARC radar data from the BCN generates the situation display. Flight plan data that was available when basic autonomous mode was entered is retained and updates will be provided via the BCN. FDE pointouts to and from adjacent sectors are initiated manually but transferred electronically on the BCN. This will include such sector-to-sector communication as that required to manage handoff messages.

30.2.1.2 Full Autonomous Operation. Full autonomous mode is the same as basic autonomous mode except there is also connectivity to the LCN which is used for flight data communications. The sector suite has full data communications with all sector suites on the LCN.

30.2.1.2.1 Sector-to-Sector Communications. ISSS shares data among sectors for the following entry types:

a. Flight data entry point out.

b. Request FDE.

c. Initiate handoff.

d. Accept handoff.

e. Retract handoff.

ISSS automatically distributes modifications to the flight data base to all sectors which have received FDE's. The flight data base maintains a record of the controlling sector for each flight. The ISSS updates this record with each accept handoff message.[79]

30.2.1.2.2 Data Recording. During autonomous operations, ISSS records system events, performance data, workload, and resource usage where data is NOT recorded by HCS operations. Recorded data is used for off line evaluation of system performance[80] and is described in paragraph 30.1.1.3.3.14.

31. PHYSICAL DESCRIPTION. Figure 31-1 defines the weight, size, and number of new equipment units for the ISSS.[81] The equipment units are grouped as: CC, communications network, Enhanced DARC System Interface (ESI), central cluster, and other I/O equipment.

31.1 Common Console. A front and rear view of the CC is pictured in figure 31-2. Subparagraphs 31.1.1 and 31.1.2 discuss and locate CC components.

Unit	Weight (lb.)	Height (in.)	Width (in.)	Depth (in.)	Qty	
Common Console	1120	78.7	36	60.4 to 63.6 note 1	note 2	
Comm Group						
LCN-active	622	79	24	36	8	note 3
LCN-passive	400	79	24	36	6 to 11	note 4
LIU	456	79	24	36	2	
HIU	400	79	24	36	2	
BCN	449	79	24	36	2	
DARC Sys Interface (ESI)	463	61	23	40	2	
Central Cluster						
4381-R91	1550	71	65	32	2	
3380-BJ4	1001	71	43	32	2	
3380-CJ2	1141	71	43	32	2	
3480-A22	430	40	26	30	2	
3480-B22	340	43	20	30	8	
3820-001	570	47	60	27	2	
3192-C20	35	17	22	17	8	
3174-01L	110	25	28	18	2	
3205-100	35	17	22	27	2	
Other IO Eq						
3192-C20	35	17	22	17	6	
CH 5312	81	13	20	21	1	
4224-201	50	11	26	15	2	

note 1 Range including shelf at highest and deepest to lowest and narrowest positions.
note 2 CC numbers vary for each site and are discussed in paragraph 32.
note 3 Six additional racks are installed with ISSS for use during transition to TAAS.
note 4 Site dependent.

ISSS Physical Characteristics
Fig. 31-1

31.1.1 Common Console Footprint. The space required for one CC is approximately 42 square feet. This includes 6 feet in front for controller work space and 6 feet in back for maintenance. The rear space is shared with the clearance requirement for CC's at the other side of the maintenance aisle. The equipment footprint for the CC is shown in figure 31-3.

31.1.2 Composition of Common Console. The CC consists of nine sub-units which are described in subparagraphs 31.1.2.1 through 31.2.9 and figure 31-4. A CC block diagram is shown in figure 31-5.

31.1.2.1 Main Display Monitor (MDM). The MDM is the primary display device. This unit provides 20-inch by 20-inch color video at the seated controller eye level. The resolution is 2048 by 2048 pixels, resulting in 10,000 points per square inch of screen surface.

31.1.2.2 Auxiliary Display Monitor (ADM). The ADM is the display on top of the CC. It provides an 11-inch by 14-inch rectangular, color video display. The ADM displays all data on a 1024 by 1280 pixel screen. CC's operate with or without an auxiliary display.

31.1.2.3 Main Display Controller (MDC). The MDC, located in the bottom center of the CC rear view, is the MDM and ADM graphics processing engine.

31.1.2.4 CC Processor. The CC processor (CCP) is an IBM RISC 6000 model 7018-740, a second generation of the IBM real time (RT) processor line. The unit contains multiple processors configured to improve throughput by simultaneous execution of multiple instructions. The RISC is rated at over 50 times the calculation power of a PC "386" microprocessor. Each unit contains 16 MegaBytes (MB) of random access memory (RAM) and a 318 MB internal hard disk. This processor is a box unit located at the extreme left in the bottom rear of the CC shown in Fig. 31-2, to the immediate left of the MDC. The CC processor is electrically identical to the 7018-741 processor which is used in other ISSS equipment where rack-mounting is required. This processor provides (in normal operation) the functionality of:

a. CCSS.

(1) Availability/configuration management.

(a) Local, group, and global availability.

(b) Time synchronization for all processors.

(2) Connection service.

(a) Access to the LCN for central processor applications, CC processor applications and HCS processor.

(b) Access to the BCN for CC processor applications and DARC.

(c) Access to the MDC.

(d) Access to the adjacent CC's.

(3) Single processor services.

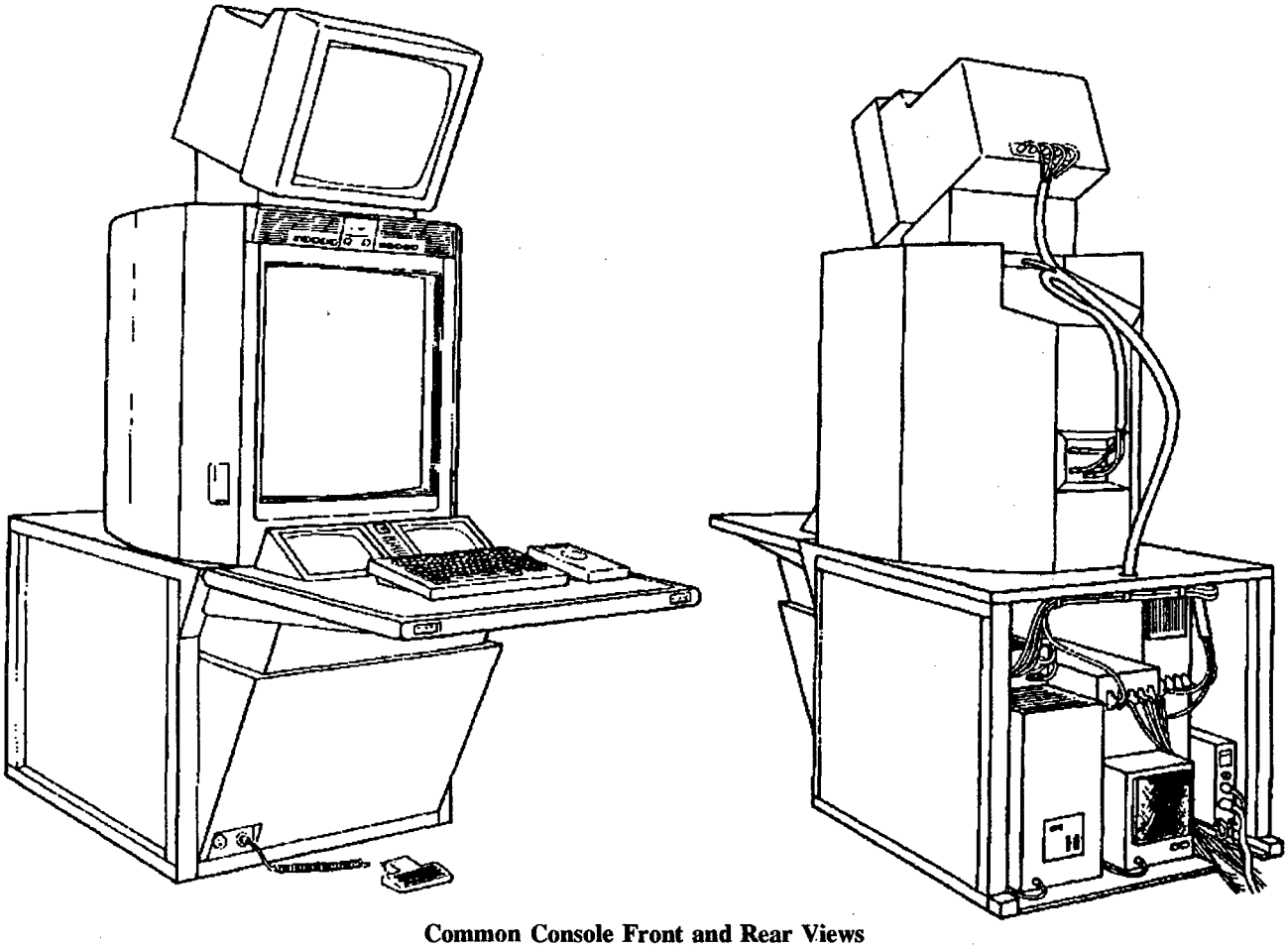

Common Console Front and Rear Views
Fig. 31-2

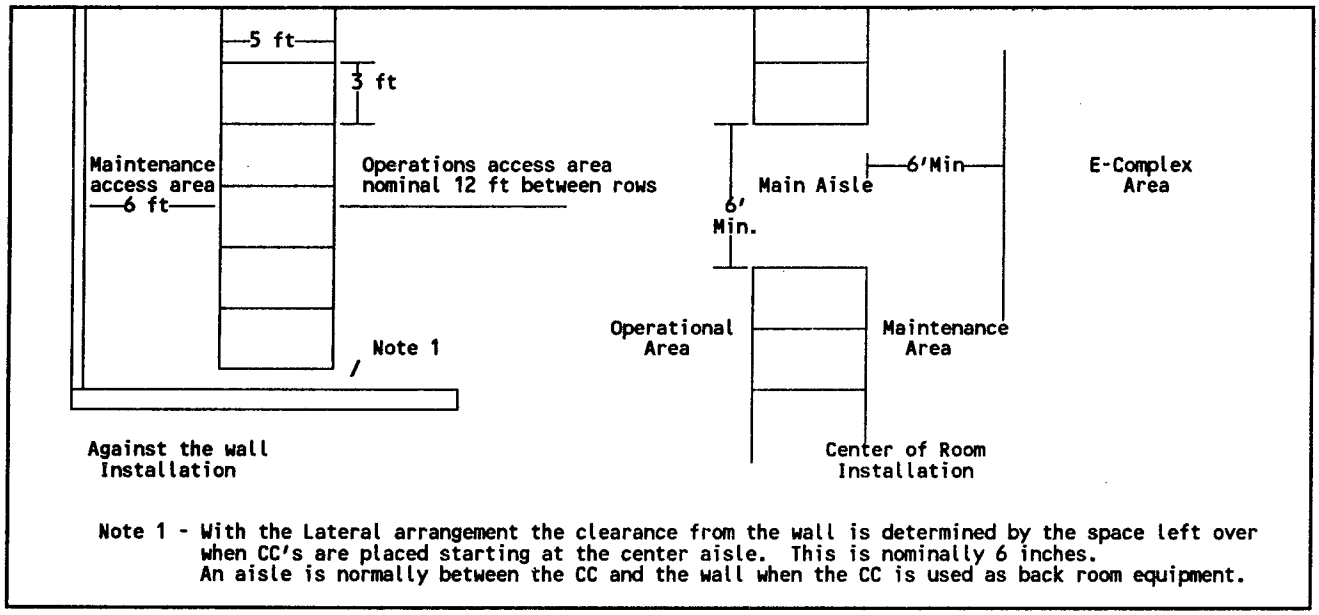

Common Console Footprint
Fig. 31-3

	Size			Wt.	Pwr	
	D	W	H	Lbs	Wat	#
Main Display Monitor (MDM)	30	27	27	243	320	1
Auxiliary Display Monitor(ADM)	21	20	18	70	150	1
Main Display Controller (MDC)	16	9	22	47	450	1
CC Processor (CCP)	24	11	18	65	245	1
Power Distribution Unit (PDU)	11	4	9	25	60	1
VSCS Electronics Module (VEM)	15	8	24	50	250	1
VSCS Display Module (VDM)	14	11	8	50	140	2
VSCS Other Equipment	-	-	-	10	-	1
Keyboard	8	17	3	7	-	1
Cursor Posit/Select Device	8	5	3	3	-	1
CC Structure w/cables	60.4 63.6	36	59	500	-	1

Common Console Units
Fig. 31-4

(a) Execution of local processor diagnostics.

(b) Local processor maintenance of software and adaptation data libraries.

(4) Facility-wide services.

(a) Log-on control of users.

(b) Central control and distribution of software updates and adaptation data.

b. Display Management (DISP).

(1) Computer Human Interface (CHI).

(a) Generates logical displays according to specified operator input.

(b) Accepts operator command entries.

(c) Performs syntax and semantic checks on entries.

(d) Routes operator entered commands to appropriate ISSS elements.

(2) Processes flight data inputs.

(3) Supports recording and playback of data displayed at CC's.

c. CHI Training Support Software (CTSS).

(1) Provides training of CC CHI.

(2) Enables training scenarios to be built and distributed.

(3) Assigns scenarios.

(4) Records student performance.

31.1.2.5 Power Distribution Unit. The power distribution unit (PDU), lower right Fig.31-2 rear view, provides conditioning for the 208 volt AC single phase from the critical bus. The PDU distributes this

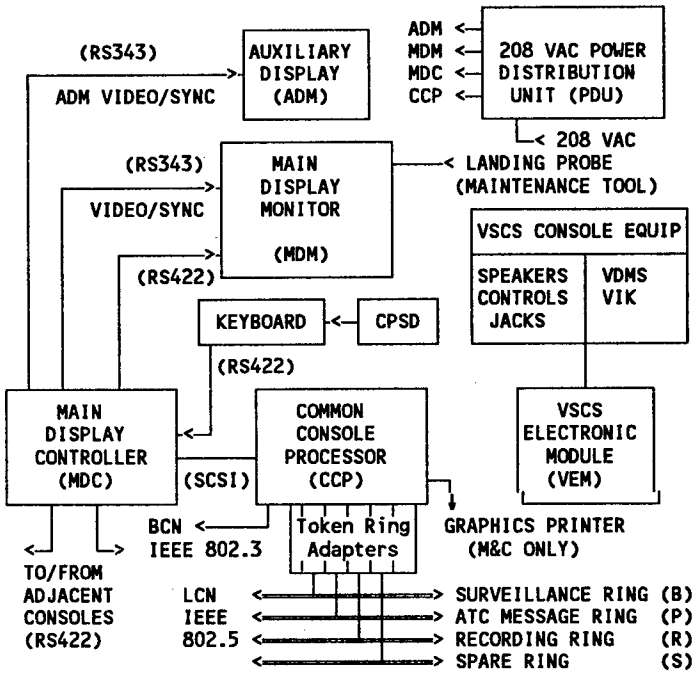

Common Console Block Diagram
Fig. 31-5

conditioned power to CC internal elements. The VSCS requires two independent single phase 120 volt sources. For reliability, this does not go through the PDU.[82] The CC also has convenience outlets which require 120 volts from the utility power bus.

31.1.2.6 VSCS Elements. Elements of the VSCS components are discussed in paragraph 33.1.4.

31.1.2.7 Keyboard. The movable keyboard is a full "QWERTY" key pad with a number pad and a function key pad. It provides operator entry for communication with the system.

31.1.2.8 Cursor Positioning Selection Device. The cursor position selection device (CPSD) allows the operator to associate an object on the display with a logical function. It allows for the positioning of the cursor at every location on that CC's displays (MDM and ADM) as well as the displays of other CC's configured in the same sector suite.[83]

31.1.2.9 CC Structure. The CC structure is the frame of the CC itself. It provides for the support and housing of all the line replaceable units (LRU), the ducting of the cooling air from below the raised floor,
and the interconnecting cables. It includes the adjustable shelf, the frame that holds the ADM, as well as the housing for the major LRU's.

31.2 Back Room Equipment. The back room equipment consists of five major groups of equipment as defined in figure 31-1.

31.2.1 Communication Network Group. LCN and BCN equipment is installed in two kinds (active and passive) and six different types of racks (manufacturer types A through F). These racks house the LCN, the LIU, the HIU, and the BCN.

31.2.1.1 LCN. The active LCN racks house two each PDU's, several bridges (which are IBM PS-2's), and a distribution panel in rack types A and B. Type C and D racks also contain wiring concentrators called multi-service access units (MSAU). Different numbers of units determine the rack type designation. The passive LCN racks house two distribution panels and several MSAU's. Figure 31-6 shows a model of a bridge.

31.2.1.2 LCN Interface Unit. LIU racks house two PDU's, a distribution panel, and IBM 6150-960 processors. This provides connection with central cluster processors. Figure 31-7 models the LIU.

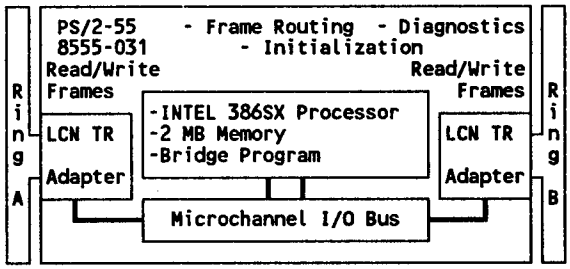

LCN Bridge Model
Fig. 31-6

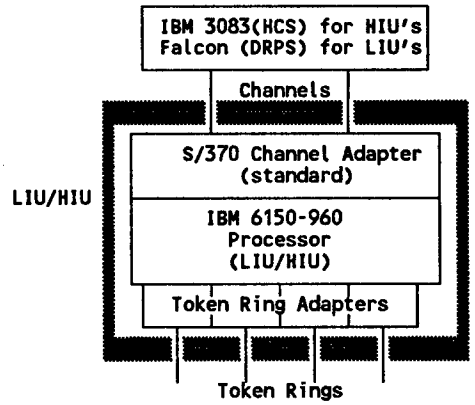

LCN Interface Unit Model
Fig. 31-7

31.2.1.3 HCS Interface Unit. The HIU, the same unit as an LIU, provides LCN connection to the Host. It may also be referred to as an LIU.

31.2.1.4 BCN. The backup channel network uses the same type physical rack as the LCN but the rack equipment contents are different. The BCN rack contains four panels of modular multiple port repeaters, a multiple diagnostic interface panel, and three panels of modular multiple port double throw coax switches.

31.2.2 ESI Group. The ESI group consists of two identical racks different from the LCN racks. Each houses a processor, IBM equipment model number 6150-960, an electronic circuit card assembly containing 15 circuit cards, a power assembly, a power supply assembly, a power distribution assembly, an AC voltage line filter, and an intake air blower assembly.

31.2.3 Central Cluster Group. This group of several equipment types is described in the subparagraphs 31.2.2.1 through 31.2.3.7. It is physically located in the back part of the HCS room. In the ISSS the central cluster processor group is dedicated to the data recording and playback function. It is not required for basic ATC services which are still provided by the Host 3083 processors. The size, weight, and numbers of each type are shown in figure 31-1.

31.2.3.1 Falcon Processor. A new IBM mainframe processor called the "Falcon" will be the back room central cluster processor. This is an air-cooled processor with more processing capacity than the HCS. Two Falcon processors are allocated to the back room equipment.

31.2.3.2 Direct Access Storage. Two direct access storage devices (DASD), IBM model numbers 3380-BJ4 and 3380-CJ2 provide the direct access storage. The units are functionally similar to the DASD units previously delivered with the HCS.

31.2.3.3 Magnetic Tape Units. IBM equipment model number 3480-B22 is a dual drive magnetic tape unit. There are eight of these units in the system. The tape control unit is an IBM equipment model number 3480-A22. Two of these allocated to this equipment group. These central cluster tape units are identical to cartridge tape units previously delivered with the HCS.

31.2.3.4 Printer. Two page printers, model number 3820-001, are allocated to the central cluster equipment.

31.2.3.5 Subsystem Control Unit. Two control units, IBM model number 3174-01L, are allocated to this.

31.2.3.6 System Console. The system console for the central cluster equipment is IBM equipment model number 3205-100. Two of these units allocated.

31.2.3.7 Color Display Station. Two, IBM equipment model 3192-C20 units, color display stations are a part of the central cluster equipment.

31.2.4 Common Consoles. CC's are part of the back room and the control room equipment. These CC's, described in paragraph 31.1, are physically identical. Back room CC's are included in: the DYSIM area, the diagnostic and repair area, and the data recording and playback system area.

31.2.5 Other I/O Equipment. Additional I/O equipment is installed with the ISSS.

31.2.5.1 Color Display Station. The central cluster processor system engineer man-machine interface is IBM equipment number 3192-C20. The E-complex will receive four and the DYSIM two of these to provide display recording and batch processing functions.

31.2.5.2 Printers. There are two different additional printers installed with the ISSS. IBM equipment number 4224-201 is a table top printer of which two each are installed in the E-complex area. These units interface with the central cluster processor. Seiko equipment number CH 5312 is a full color printer, and one is installed in the DRPS area.

31.3 E-Complex. With ISSS the E-Desk area evolves into what is called the E-Complex. This transformation has been the subject of much conversation over a long period. The material presented in this document represents a summary of all the field participation of several work-groups. Figure 31-8 shows the generic floor layout produced by these efforts. It will be the responsibility of each facility in coordination with its region to adapt the generic plan to their site, and submit it to AAP-240. This should include a written plan with diagrams that show how the site plans to accomplish the E-Complex transition.

31.3.1 Space Allocation. The space that has been allocated to the E-Complex has been determined by several factors. The standard ARTCC drawings have been developed to maximize the space available for operational CC's. Building standards require the use of either ramps or lifts. Lifts have been considered and discounted as not acceptable. The E-Complex is that space resulting between the access ramps and the operational CC's. Not all sites are required to use a full complement of operational CC's, and have the liberty of using some of the unused operational CC space. However, achievement of end state configuration must be considered when planning to deviate from the generic model.

31.3.2 E-Complex CC Location. The location of the CC's that are a part of the E-Complex are limited to given boundaries. The CC's must be situated above the structural beam that is bonded to the concrete floor for mounting with hold down bolts. This is based on a lighting grid pattern of two feet in the longitudinal direction. The six foot maintenance aisle behind the last row of operational CC's must be maintained. The central main aisle of six feet must also be maintained. The two LCN CC's must be adjacent to each other. The two BCN CC's must also be adjacent to each other, and the two sets of two must be near each other. Other CC's in the E-Complex have no proximity restrictions.

31.3.3 Other E-Complex Equipment. The location of all other equipment within the E-Complex is restricted by the functional preference of the site users, see paragraph 42.4.1.1 for guidance regarding equipment relocation. The site is at liberty to place these equipments as desired within the space confines allocated by standard ARTCC drawings.

32. SYSTEM REQUIREMENTS. The ISSS site preparation requirements for architectural, electrical, and mechanical requirements are summarized in subparagraphs 32.1. through 32.3.

32.1 Architectural. The ISSS architectural requirements for space, raised floors, lighting, and noise control are defined in subparagraphs 32.1.1 through 32.1.3.

32.1.1 Space. The space requirements for each ARTCC are shown in detail in the SAP. The SAP is produced for and delivered to each site as defined in paragraphs 57.1.3 per delivery instructions in paragraph 72. Standard ACF end state equipment layout drawings STD-EL-ES-00 to -12 show the baseline equipment space allocations.

32.1.2 Raised Floors. The raised floor specifications for ISSS equipment are shown in figure 32-1.[84]

32.1.3 Sound Control. The acoustic requirements for the ISSS equipment and control rooms are shown in figure 32-2. Acoustical design for control room operations area and back room equipment areas provides acoustical treatment to control noise penetrating these areas. Noise may penetrate from the exterior or adjacent areas. Noise is generated by equipment within an area, and noise is generated by facility environmental (electrical/mechanical) systems. Operations area acoustical design provides an acoustical environment acceptable to the inhabitants, normally considered to be a measured noise

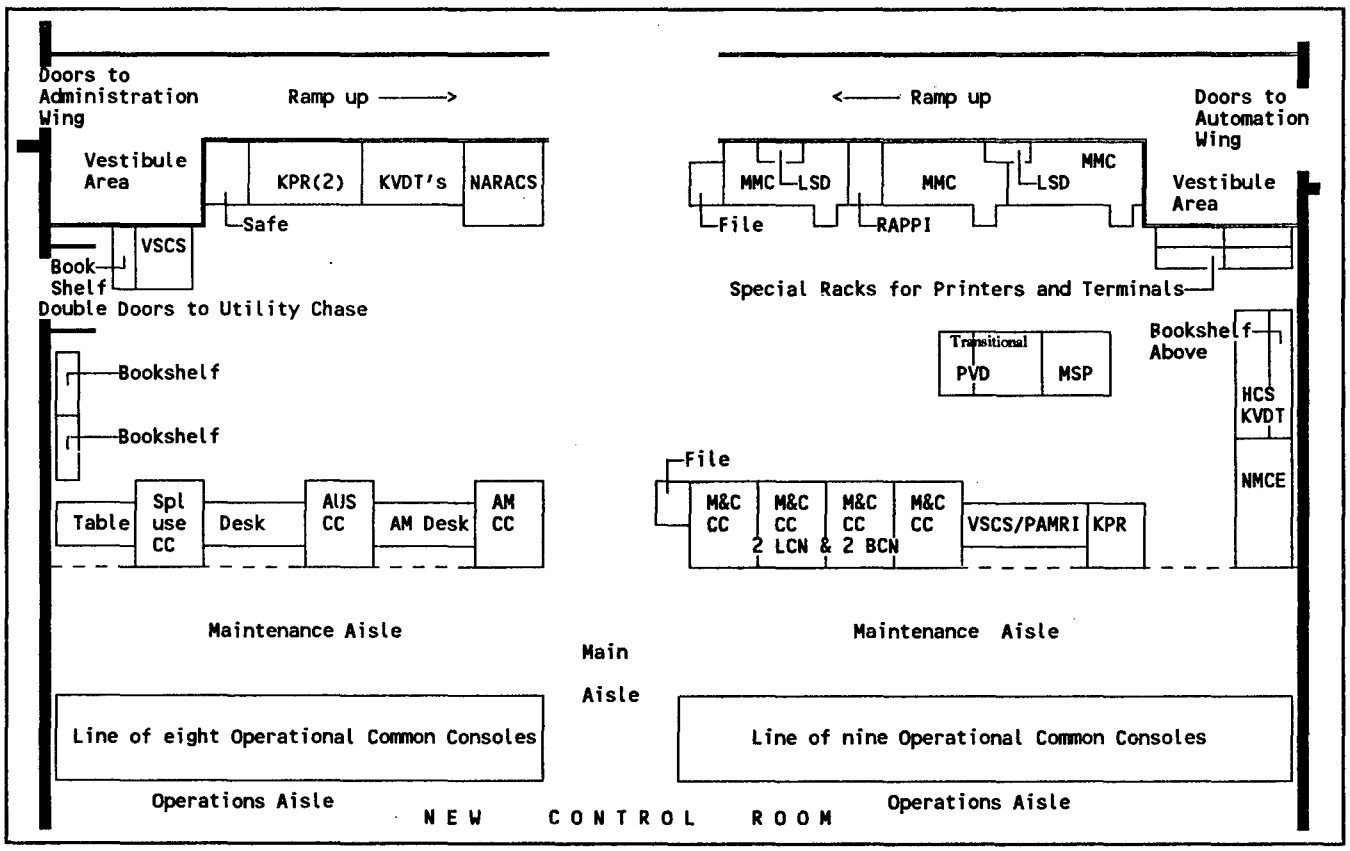

Generic E-Complex Layout
Fig. 31-8

coefficient of 45 (NC-45) (nominal) with an upper limit of NC-50. Computer rooms and electronic equipment area acoustical design provides an acoustical environment of NC-50 (nominal) with an upper limit of NC-55.

Characteristic	Measurement	
Height	18"	
Load bearing	250 lb/sq. Basement 125 lb/sq. 1st floor	note 1
Panel size	24"x24" Carpeted	
Electrical Resistance	Min. 1.5×10^5 Ohms	
	Max. 2×10^{10} Ohms	note 2
Air loss	Max. 0.1 CFM	note 3

note 1 Uniform design load of 250 lbs per sq ft basement level and 125 lbs per sq ft first floor level, and a point load of 1000 lbs on one sq inch.

note 2 Resistance to ground when installed on a grounded raised floor panel.

note 3 Not to exceed 0.1 cubic feet per minute (CFM) per linear foot of joint at a positive pressure of 0.1 inches of water (WG) in the plenum.

Specifications for Raised Floors
Fig. 32-1

Internal Surface / Design Criteria	Ceiling		Wall		Floor		Spatial	
	Min	Max	Min	Max	Min	Max	Min	Max
(NRC) Noise Reduction Coefficient	0.6	0.75	0.75	—	0.35	—	1.0	-
Sound Transmission Class (STC)	0.4	0.44	NA	NA	NA	NA	NA	NA
Acoustical Requirement	Acoustic Ceiling Tile		Sound Absorbing Panels		Carpet Raised Floor System		Ceiling Hung Baffles	

Room Surface Acoustical Requirements
Fig. 32-2

32.2 Mechanical, Cooling. The air cooling requirements for ISSS equipment for each ARTCC are defined in figure 32-3. Calculations for figure 32-4[85] based on the CC numbers shown in figure 32-5. The CC numbers in figure 32-5 reflect the current AAS contract which do not meet the requirements, as stated by the Air Traffic Plans & Requirements Service. The current contract numbers, reflected in figures 32-4 and 32-5, have been used for space and heating, ventilating, and air conditioning (HVAC) planning. These figures will be updated to reflect AT required CC's upon reconciliation of the discrepancy between AT requirements and the AAS contract.

32.2.1 Common Console. Each CC dissipates 6.2 MBH (assuming a power consumption of 2.1 KVA) and is cooled by forced and gravity convection air through:

a. Direct connection to raised floor plenum.

b. Direct intake from the surrounding room.

Conditioned air is supplied at the range of conditions shown in figure 32-3. Spent cooling air is exhausted through the top and back of the CC equipment.

Characteristic	Maximum	Minimum	Room
Temperature, Dry Bulb degrees F	65	55	73-77
Relative Humidity	80%	45%	40-60%
Pressure in.Wg.	(+)0.15	(+)0.05	N/A
Filtration Efficiency note 1	55%	30%	N/A

note 1 Based on ASHRAE Standard 52-76, Atmospheric Dust Spot Efficiency Test.

Common Console Cooling Air Requirements
Fig. 32-3

ISSS Heat Dissipation in Thousands of BTU/Hr.						
	Control Room CC's		Back Room Equipment			
ARTCC	No.	note 1 KBTU Per Hr	CC's	note 2 KBTU /Hr	note 3 Other KBTU/Hr	Total KBTU/Hr
ZSE	91	625	18	124	180	929
ZTL	127	871	22	151	"	1202
ZAU	129	885	22	151	"	1216
ZFW	125	858	22	151	"	1189
ZOB	125	858	22	151	"	1189
ZHU	117	803	18	124	"	1107
ZDV	113	775	18	124	"	1079
ZDC	120	823	18	124	"	1127
ZLC	81	563	18	124	"	867
ZNY	70	480	22	151	180	811
ZKC	117	803	18	124	"	1107
ZMP	97	666	22	151	"	997
ZAB	111	762	22	151	"	1093
ZOA	84	577	22	151	"	908
ZME	102	700	22	151	"	1031
ZLA	111	577	22	151	"	908
ZMA	84	714	22	151	"	1045
ZID	104	714	22	151	"	1045
ZJX	104	714	18	124	"	1018
ZBW	107	734	18	124	180	1038

note 1 Includes VSCS.

note 2 DYSIM, DRPS, and Diagnostic & Repair.

note 3 LCN, ESI, and the Central Processor system.

ISSS Heat Generated
Fig. 32-4

32.2.2 Back Room Equipment. Back room equipment dissipates heat as shown in figure 32-6. The back room equipment is cooled by forced and gravity convection air. Specifications for the air supplied from the raised plenum and for the surrounding room are shown in figure 32-7. The BRE connected to the raised floor plenum require air flow rates shown in figure 32-8.

32.3 Electrical. Subparagraphs 32.3.1 and 32.3.2 summarize electrical power and grounding requirements.

32.3.1 Power. The ISSS requires single phase, 60 Hertz, 208/120 volt electrical power from each ARTCC critical bus in the amounts shown in figure 32-9. The power

requirements for various ISSS subsystems are shown in figure 32-9. This power load is based on an engineering estimate of 2.1 thousand volt-amperes (KVA) per CC. Differences in the production CC power consumption will cause a corresponding change to these figures.

ISSS CC Numbers (per current contract)											
	Control Room						Back Room				
				SE							
ARTCC	OPNL	AM/AOS	TMU	LCN	BCN	STUOBT-AL	DIAG	DRPS	DYSIM	STUOBT-AL	GRAND TOTAL
Seattle	73	2	12	2	2	91	2	4	12	18	109
Atlanta	109	2	12	2	2	127	2	4	16	22	149
Chicago	111	2	12	2	2	129	2	4	16	22	151
Fort Worth	107	2	12	2	2	125	2	4	16	22	147
Cleveland	107	2	12	2	2	125	2	4	16	22	147
Houston	99	2	12	2	2	117	2	4	12	18	135
Denver	95	2	12	2	2	113	2	4	12	18	131
Washington	102	2	12	2	2	120	2	4	12	18	138
Salt Lake	63	2	12	2	2	81	2	4	12	18	100
New York	52	2	12	2	2	70	2	4	16	22	92
Kansas City	99	2	12	2	2	117	2	4	12	18	135
Minneapolis	79	2	12	2	2	97	2	4	16	22	119
Albuquerque	93	2	12	2	2	111	2	4	16	22	133
Oakland	66	2	12	2	2	84	2	4	16	22	106
Memphis	84	2	12	2	2	102	2	4	16	22	124
Los Angeles	93	2	12	2	2	111	2	4	16	22	133
Miami	66	2	12	2	2	84	2	4	16	22	106
Indianapolis	86	2	12	2	2	104	2	4	16	22	126
Jacksonville	86	2	12	2	2	104	2	4	12	18	122
Boston	89	2	12	2	2	107	2	4	12	18	125

Numbers of Common Consoles - ISSS
Fig. 32-5

Back Room Equipment Heat Dissipation	
Equipment	KBTU/HR
BREA	314.5
BREB	10.5
BREC	92.0

BREA: Back room equipment A is new ISSS equipment that is located on the automation wing 1st floor. It consists of the LCN, DYSIM, DRPS, D&R, and the BCN.

BREB: Back room equipment B is new ISSS equipment that is located on the automation wing basement. It consists of the ESI.

BREC: Back room equipment C is new ISSS equipment that is located on the control wing basement. It consists of the central cluster processor equipment.

Heat Dissipation
Fig. 32-6

32.3.2 Grounding. ANS-320 has a project in process to convert ARTCC's from multiple ground plates to a grounding grid. IBM is changing their ISSS design to accommodate the use of grounding grids.

33. INTERFACES. This paragraph describes ISSS interfaces. The interfaces of external elements are not discussed except where a direct connection with an ISSS element exists. Figure 33-1 shows the relationship of the ISSS elements. These physical and electrical interfaces are discussed in the following subparagraphs.

Characteristic	Maximum	Minimum	Room
Temperature, Dry Bulb degrees F	65	55	73-77
Relative Humidity	85%	45%	40-60%
Pressure in.Wg.	(+)0.15	(+)0.05	N/A
Filtration Efficiency note 1	50%	30%	N/A

note 1 Based on ASHRAE Standard 52-76, Atmospheric Dust Spot Efficiency Test.

BRE Cooling Air Requirements
Fig. 32-7

Back Room Equipment Air Exhaust	
Equipment	CFM
BREA	12,260
BREB	860
BREC	7,270

See Figure 32-6 for definition of BREn, where n is A, B or C.

Air Exhaust Rate
Fig. 32-8

ISSS Equipment Power Requirements in KVA						
				Common Console		
ARTCC	Central Processor	LCN	ESI	Number	Load	Total
ZSE	32.1	25.3	5.6	109	228.9	291.9
ZTL	"	"	"	149	312.9	375.9
ZAU	"	"	"	151	317.1	380.1
ZFW	"	"	"	147	308.7	371.7
ZOB	"	"	"	147	308.7	371.7
ZHU	"	"	"	135	283.5	346.6
ZDV	"	"	"	131	275.1	338.1
ZDC	"	"	"	138	289.8	352.8
ZLC	"	"	"	100	210.0	273.0
ZNY	32.1	25.3	5.6	92	193.2	256.2
ZKC	"	"	"	135	283.5	346.5
ZMP	"	"	"	119	249.9	312.9
ZAB	"	"	"	133	279.3	342.3
ZOA	"	"	"	106	222.6	285.6
ZME	"	"	"	124	260.4	323.4
ZLA	"	"	"	133	279.3	342.3
ZMA	"	"	"	106	222.6	285.6
ZID	"	"	"	126	264.6	327.6
ZJX	"	"	"	122	256.2	319.2
ZBW	32.1	25.3	5.6	125	262.5	325.5

ISSS Subsystem Power
Fig. 32-9

33.1 Physical. Five physical interfaces are discussed in the following subparagraphs.

33.1.1 Adjacent Common Consoles. The adjustable display feature of the CC provides for wrap-around sector configurations of two, three, or four CC's in a sector suite,[86] although four CC configurations are not planned for ISSS. The design allows for the removal of a CC to

the rear without interfering with equipment on either side of the CC being moved.

33.1.2 **Raised Floor**. The CC requires cooling air from under the raised floor. The CC equipment is situated on the raised floor such that the cooling air intake ports are aligned with the cutouts in the floor. The cutouts in the floor for the electrical cables also align and have protective shields over the rough edges of the floor cut out. In some cases the air interface may require the installation of a filter or baffle to prevent air escaping between the equipment and the floor.

33.1.3 **Cabling**. The cables that connect to the installed equipment provides a physical interface as well as an electrical interface. Cable trays or cable raceways are installed under the raised floor.

33.1.4 VSCS. The CC has a physical interface with the VSCS console equipment (VCE). The CC provides the physical housing for some of the VSCS hardware.[87] There are eight different VCE elements defined as follows:

a. VSCS Electronics Module (VEM). The CC provides:

(1) A volume of space 24 inches high by 15 inches deep by 8 inches wide.

(2) Access space to the VEM.

(3) Cooling ambient air.

(4) Space for the cables to the VEM.[88]

b. VSCS Display Module (VDM). Two separate spaces (i.e., areas within the frame of the CC) are provided to accommodate the CHI to the physical devices. Both spaces are the same dimension, 8 inches high by 11 inches wide by 13.5 inches deep. These spaces will accommodate the VSCS IDU's which support the controller CHI with the VSCS. Access space and ambient cooling air are provided as well as space for the cable runs.[89]

c. VSCS Indirect Access Keypad Jack. Each CC provides shelf space within the primary reach zone for the VSCS indirect access keypad (VIK). The measurements allowed for the VIK are 3 inches wide by 5.5 inches deep by 2 inches high. Each CC provides a four-pin modular telephone jack sufficiently close to the VIK so a cable between the jack and the VIK does not clutter the CC work shelf.[90]

d. Loudspeakers. Each CC provides two loudspeakers mounted close to the left and right extremities of the CC.[91]

e. Jack Modules. Each CC provides two dual jack modules. The jack modules incorporate two PJ889 jacks. The dual jack modules are mounted close to the left and right extremities of the front of the CC shelf.[92]

f. Foot Activated Switch Jack. Each CC provides a four-pin modular jack to accommodate a foot activated switch and space for the cable to this jack.[93]

g. Audio Level Control. Each CC provides audio level controls for each of the following:

(1) Left loudspeaker, located near speaker.

(2) Right loudspeaker, located near speaker.

(3) Chime, located near one or both loudspeakers.

(4) Controller headsets.

Space is also provided to accommodate the cables to these audio level controls.[94]

h. Umbilical Connection. Each CC provides for two half inch diameter VSCS umbilical cables (i.e., power and control cable bundles).[95]

33.1.5 **Hold Down Bolts**. The CC's are bolted to a structural member which is bonded to the concrete floor. This provides stability to offset the high center of gravity. In seismic areas this also prevents movement of the console during a seismic event.

33.2 **Electrical**. The internal and external electrical interfaces are described in subparagraphs 33.2.1 and 33.2.2.

33.2.1 **Internal**. Internal electrical interfaces refer to those interfaces within a set of CC's or Sector Suite (see figure 33-1). Three internal electrical interfaces are defined in subparagraphs 33.2.1.1 through 33.2.1.3.

33.2.1.1 **CC to LCN**. This interface is the primary external interface for each CC. Through the LCN interface the CC transmits and receives all data from functional elements outside of the sector suite, except DARC. The generic requirements and characteristics of this interface are:

a. The total network is more reliable than the attached equipment.

b. No single failure within the network causes a network failure.

c. Equipment can be added to or removed from the network without affecting the unchanged interfaces.

d. The network provides error detection, correction, and reporting.

e. The network features facilitate network maintenance, diagnostics, and service.

f. The network complies with IEEE 802 standards.

g. Communications within the network complies with international standards organization (ISO) open systems interconnect (OSI) reference model and ISO communication protocol standards.

h. The network provides both a fair access scheme and a prioritized access scheme.

The basic protocol of the LCN will be based on the IBM 16-MB token ring system.

33.2.1.2 CC to BCN. This interface is the backup external interface for each CC. The basic protocol of the BCN will be 10-MB Ethernet. Through the BCN interface the CC transfers keyboard messages and receives DARC radar data. The generic characteristics of this interface are similar to the CC to LCN interface described in paragraph 33.2.1.1. One difference however, in addition to different IEEE LAN protocol, is the radar control multiplexor (RCM) interface card added by IBM in the DARC upgrade to assist with the BCN DARC interface.

33.2.1.3 CC to Adjacent CC. The CC to CC interface allows any CC to interface with an adjacent CC. The

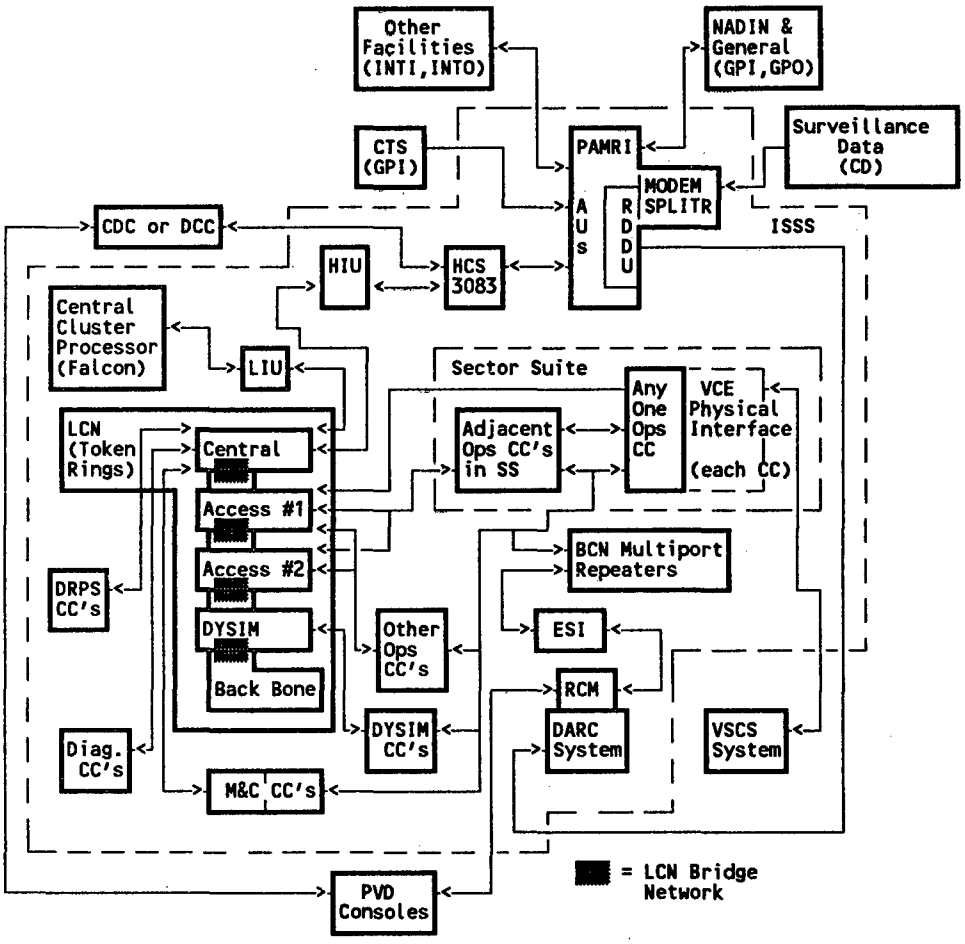

Block Diagram of ISSS
Fig. 33-1

adjacent CC interface allows CC's that are configured together as a sector suite to access each other as though they were the same CC. For example, the CPSD of one CC is capable of positioning its cursor on the displays of the adjacent CC's that are configured with that CC in the same sector.[96]

33.2.2 External. External electrical interfaces refer to those interfaces between the ISSS and other systems (see figure 33-1). Four external electrical interfaces are described in subparagraphs 33.2.2.1 through 33.2.2.4.

33.2.2.1 LCN to HCS. The local communications network to Host computer system interface is the primary interface for flight data and radar data processing. The LCN interface unit is a dedicated unit and therefore called the HIU. This is a two-way interface. Some of these data flow from the LCN to the HCS. Typically these are flight data entered or changed by the air traffic controller. The majority of the data flow is from the HCS to the LCN. Typically this data is received by the PAMRI and processed by the HCS. A detailed discussion of the PAMRI data is contained in the interface section, paragraph 33 of Order 6110.6, Project Implementation Plan Peripheral Adapter Module Replacement Item. Subparagraphs 33.2.2.1.1 through 33.2.2.1.5 describe five different types of data used by the ISSS.

33.2.2.1.1 Common Digitizer (CD) Format. CD data consist of all long-range radar, short-range radar, beacon-only radar, and ATC radar weather data. During the ISSS timeframe, the radar data formats are unchanged.

33.2.2.1.2 Interfacility Input (INTI). INTI data consist of inputs to the facility from other facilities. These data include central flow control and metering, flight plans, tracks, tests, and responses. Flight plan related messages include flight plans, amendments, and cancellations. Track-related messages are received to initiate, transfer, and update tracks. Response messages accept, reject, and request retransmission of a message or a response to a test message. Test messages check the proper operation of the interface.[97] During the ISSS timeframe, these formats are unchanged.

33.2.2.1.3 Interfacility Output (INTO). INTO data consist of outputs from this facility to other facilities. This data includes flight plans, tracks, tests, and responses. Flight plan related messages include flight plans, amendments, and cancellations. Track related messages are received to initiate, transfer, and update tracks. Response messages accept, reject, and request retransmission of a message or a response to a test message. Test messages check the proper operation of the interface.[98] During the ISSS timeframe, the formats of these messages are unchanged.[99]

33.2.2.1.4 General Purpose Input (GPI). GPI data consist of inputs to the facility system. These inputs include data from the non-radar keyboard multiplexer (NRKM), DARC, flight data input/output (FDIO), the coded time source (CTS), and National Airspace Data Interchange Network IA (NADIN).

33.2.2.1.5 General Purpose Output (GPO). GPO data consist of outputs from the facility system. These outputs include data from the NRKM, DARC, FDIO, and NADIN IA.[100]

33.2.2.2 VSCS. There is no direct electrical signal interface between the ISSS and the VSCS. The VSCS interface is reserved for the ACCC timeframe. This interface will allow the ACCC to automatically reconfigure the VSCS and is discussed in the ACCC project implementation plan.

33.2.2.3 ISSS to DARC. There are three interfaces between the ISSS and DARC. They are discussed in subparagraphs 33.2.2.3.1 through 33.2.2.3.3.

33.2.2.3.1 Flight Data. The DARC HCS bidirectional flight data interface via PAMRI provides for the maintenance of consistent flight data bases in the HCS and DARC computers.

33.2.2.3.2 DARC Keyboard Data. The DARC to CC keyboard data interface via the BCN provides for transfer of CC keyboard messages to DARC. This interface is switchable between PVD's and CC's at the ESI on a sector-by-sector basis.

33.2.2.3.3 DARC Display Output. The DARC to CC display output interface via the ESI and BCN provides for the transfer of an initial DARC situation display image from DARC to the CC. After the initial display is established, subsequent messages provide only update messages of the changes to the surveillance picture.

33.2.2.4 LCN Between Other Sectors. The interface between a sector and another sector is by way of the LCN, or the BCN in case of a LCN failure.

34.-39. RESERVED.

CHAPTER 4. PROJECT SCHEDULE and STATUS

40. PROJECT SCHEDULES AND GENERAL STATUS. Project schedules for the ISSS are derived from the AAP-200 ISSS program plan and the schedule shown in figure 40-1. The general ISSS project status is determined and reported on a regular basis. Paragraph 54, Project Managerial Communications, describes scheduled meetings, regularly published news bulletins, and the electronic communications network, all of which are used to acquire and present status of ISSS project schedules. Other schedules which affect the project schedules are created by the regions when they establish contracts to perform site preparation work. The status of scheduled activities involved in implementation of the ISSS, including region contracted work, are reported through established procedures defined in paragraph 54.

41. MILESTONE SCHEDULE SUMMARY. Milestones pertaining to ISSS project implementation are derived from the AAP-200 ISSS program plan, presented in paragraph 40. Figure 41-1, milestone list, shows either the relative date for that activity with respect to the equipment delivery or an absolute date. The list also presents the paragraph number within this document, where applicable, that discusses the subject activity. Figure 41-2 presents a waterfall of the major milestones for each site.

41.1 Legend for Figure 41-2. The characters used to symbolize events in figure 41-2 are defined in subparagraphs 41.1.1 through 41.1.11.

41.1.1 Legend for Figure 41-2, ▲SPDIP. The AAS prime contractor delivered the site preparation design information package (SPDIP) 5 months after contract award.[1] The SPDIP, a generic site design, is used for early site planning by region and site personnel as well as headquarters and the System Engineering and Integration (SEI) contractor. For a detailed discussion of the SPDIP see paragraph 57.1.1.

41.1.2 Legend for Figure 41-2, T. The FAA, SEI contractor, and the AAS prime contractor participate in a technical interchange meeting (TIM). The TIM objective is to coordinate SPDIP data and ensure that all participants understand and agree on the site preparation requirements. This marks the start of the specific design start for the first site.

41.1.3 Legend for Figure 41-2, P. This indicates the latest date for site-specific design packages prepared by SEI contractor/R.M. Parsons to be delivered to the regions. This is scheduled 23 months before equipment delivery. This is required so regions may perform engineering and administrative work leading to contracts for site preparation. For a detailed discussion of the site-specific design package, see paragraph 57.2.

41.1.4 Legend for Figure 41-2, S. The AAS prime contractor is required to deliver the SAP 9 months before equipment delivery for each site.[2] The SAP tells how the AAS contractor plans to install, checkout, test, turn over the equipment to the FAA, and support the FAA through commissioning of the equipment. For a detailed discussion of the SAP, see paragraph 57.1.3.

41.1.5 Legend for Figure 41-2, C. This symbol represents two events. First, delivery and installation of DYSIM CC's at each site. This delivery includes 15 CC's, 3 for Airway Facilities (AF) CHI training, and 12 for AT CHI training and DCT. Secondly, the site readiness review occurs.

41.1.6 Legend for Figure 41-2, #. A deployment readiness review occurs before the first site equipment delivery, see paragraph 70. This one-time event occurs prior to deployment of the first operational system.

41.1.7 Legend for Figure 41-2, D. Delivery of site equipment is established within the plan discussed in paragraphs 40 and 41. It should be noted that early CC's are delivered 4 months prior to the scheduled delivery date. Remaining CC's are delivered in two increments, half with the other equipment starting at the AAS contract delivery schedule, the other half prior to Government acceptance.

41.1.8 Legend for Figure 41-2, A. Contractor acceptance inspection (CAI) is government acceptance as indicated by the A. The schedule for this event is derived from the AAP-200 ISSS program plan and schedule of figure 40-1. The FAA takes control of equipment and begins integration testing at this point in time, see paragraphs 83.2 and 83.3.

41.1.9 Legend for Figure 41-2, I. Initial Operating Capability (IOC) is the declaration by the JAI board that the hardware, software, procedures, and personnel are ready to perform ATC operations in a controlled environment for system shakedown. A partial JAI is conducted to formally declare IOC of the ISSS, described in paragraph 83.5.

41.1.10 Legend for Figure 41-2, O. ORD, a formal demonstration to mark commissioning of equipment, precedes the JAI report, see paragraph 83.7.

ISSS Program Plan and Schedule
Fig. 40-1

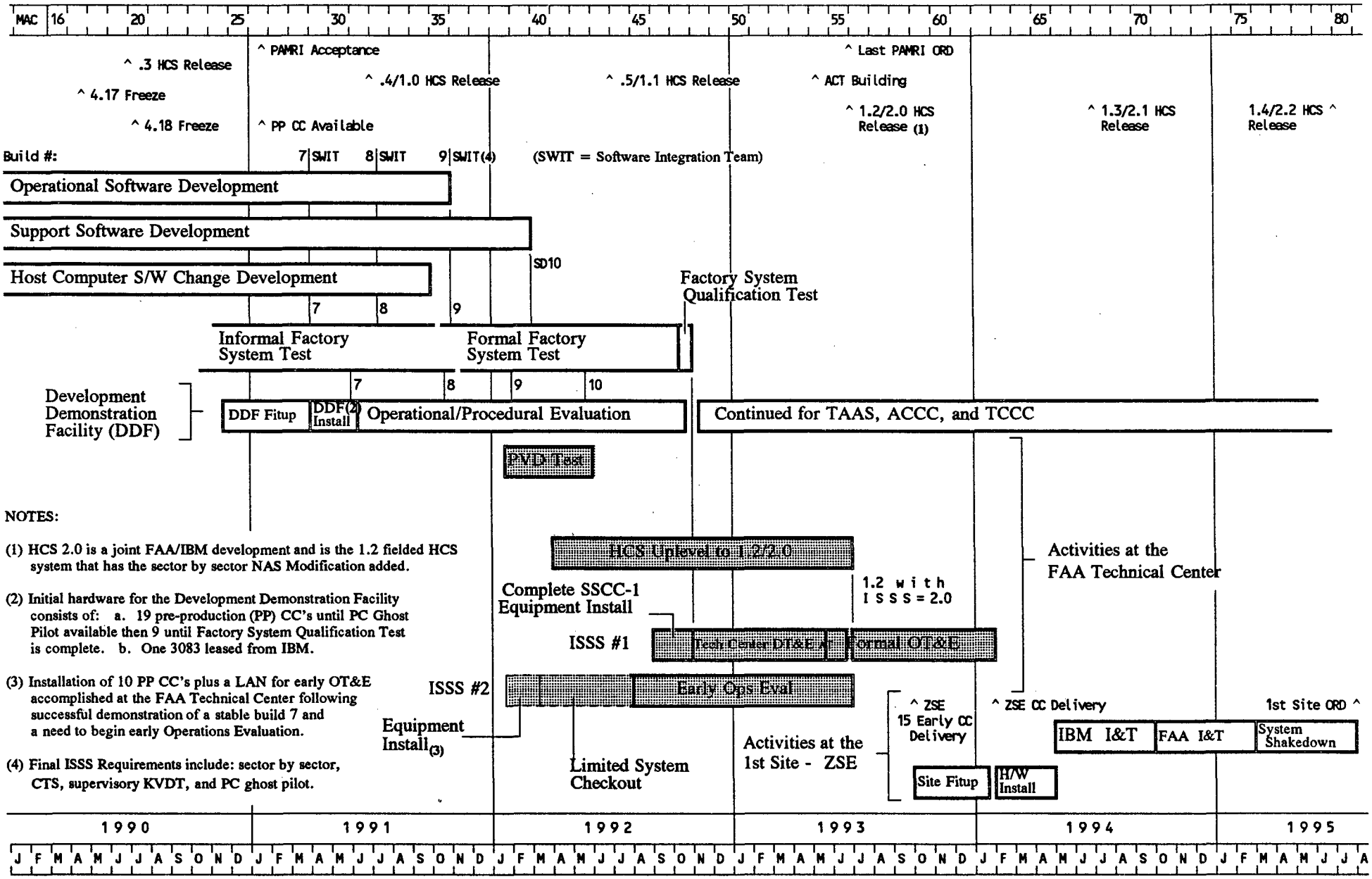

NOTES:

(1) HCS 2.0 is a joint FAA/IBM development and is the 1.2 fielded HCS system that has the sector by sector NAS Modification added.

(2) Initial hardware for the Development Demonstration Facility consists of: a. 19 pre-production (PP) CC's until PC Ghost Pilot available then 9 until Factory System Qualification Test is complete. b. One 3083 leased from IBM.

(3) Installation of 10 PP CC's plus a LAN for early OT&E accomplished at the FAA Technical Center following successful demonstration of a stable build 7 and a need to begin early Operations Evaluation.

(4) Final ISSS Requirements include: sector by sector, CTS, supervisory KVDT, and PC ghost pilot.

note	Milestone	Relative Date	Reference Paragraph
	CDR Conference Complete	6/88	NIS
	CDR Approval		NIS
	ISSS Design Approval		NIS
1	Initial Site Survey	>24 MPED	71.3.1
	ATC Equipment Delivery	2/94 ZSE	NIS
	ISSS Acceptance	10/94ZSE	82.1.3
	ISSS Limited Production Release	10/94	NIS
1	SAP Site Survey	12 MPED	71.3.2
1	Facility Transition Plan Cpl	note 3	56.2.3.2
1	Site Preparation Verification	4 MPED	71.4
1	Deployment Readiness Review	1MPEDZSE	70.
1	Equipment Delivery	note 2	72
	OT&E at FAA Technical Center	2/94	82.2
	ISSS Full Production Release	8/95	NIS
1	Contractor Acceptance Insp	8 MAED	83.2
1	FAA Integration Testing Cpl	13 MAED	83.3
1	Certification	13 MAED	83.4
1	Training Complete AF & AT	note 4	91
1	Operational Procedures Complete	12 MAED	58.2
1	Initial Operating Capability	13 MAED	83.5
1	Shakedown Start	13 MAED	83.6
1	Operational Readiness Demon.	18 MAED	83.7.4
1	Joint Acceptance Inspection	18 MAED	83.7
1	Decommission Old/PVD Equipment	19 MAED	95
1	Equipment Removal Authorization	>19 MAED	95

note 1 Milestone in each site's schedule of activities.
note 2 Equipment delivery date for each site is listed in figure 41-2, and figure 41-3.
note 3 Determined by region: but before 9 months prior to equipment delivery.
note 4 Determined by region: but before 17 months after equipment delivery.
NIS Not in scope of this PIP.

Milestone List
Fig. 41-1

41.1.11 Legend for Figure 41-2, E. Equipment removal at the first few sites occurs 30 days after ISSS is commissioned. Earlier removal may be possible for succeeding sites as confidence in the ISSS is gained. Tentative milestones will be finalized by the JAI board comprised of region, site, and headquarters personnel.

41.2 Major Milestones. Figure 41-3 shows the delivery, acceptance, and operational dates for each site.[3] The contractor plans for equipment delivery to occur the weekend prior to contract delivery date in most cases. **EACH SITE DETERMINES ITS DETAILED SCHEDULE** by applying figure 41-3 dates to those of figure 41-4 with respect to the site specific personnel workload.

42. INTERDEPENDENCIES AND SEQUENCE. Implementation of ISSS depends on successful, timely completion of other projects and ISSS prepatory work. The reasons for the dependency are discussed in subparagraphs 42.1 through 42.13. Figure 42-1 presents identified interdependencies. The subparagraphs follow figure 42-1 sequence from left to right. That sequence is based on information available to date. The final sequence may change with lessons learned during the remainder of ISSS.

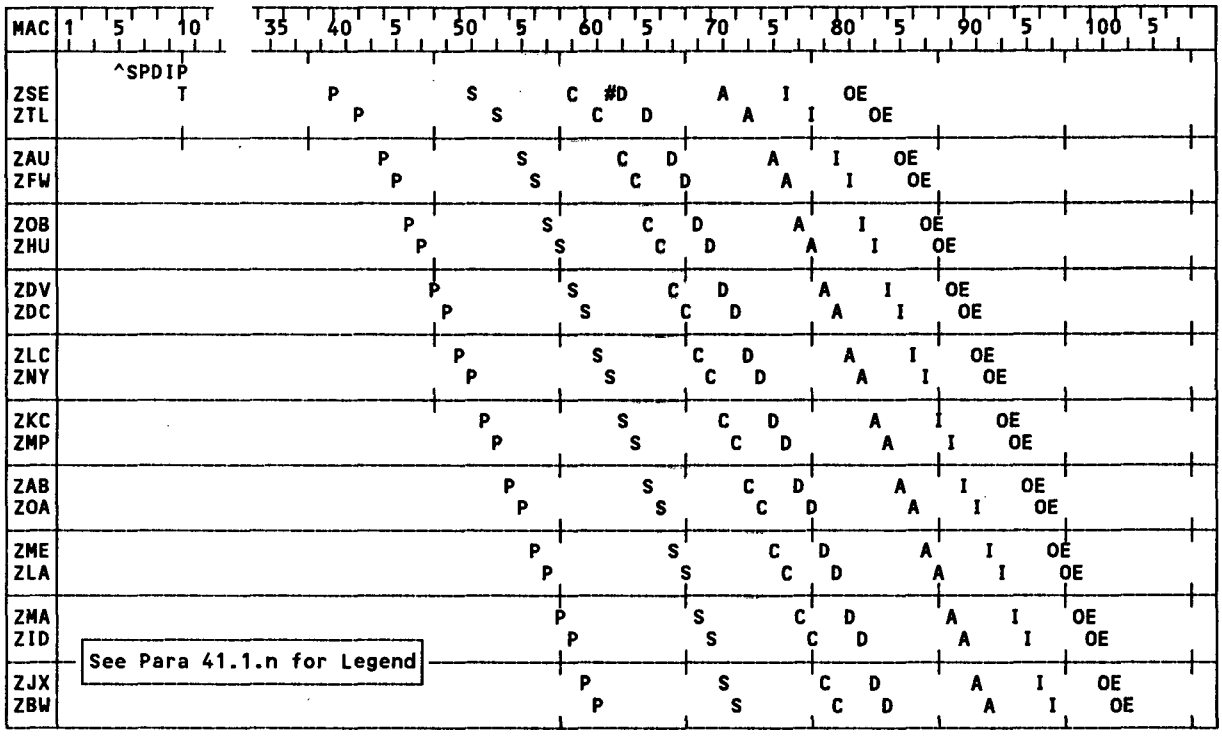

ISSS Implementation Milestone Schedule by Site
Fig. 41-2

ARTCC	EQUIP DELIVERY		GOV'T. ACCEPT		IOC		ORD	
	MAC	Date	MAC	Date	MAC	Date	MAC	Date
Seattle	63	2/94	71	10/94	76	3/95	81	8/95
Atlanta	65	4/94	73	12/94	78	5/95	83	10/95
Chicago	67	6/94	75	2/95	80	7/95	85	12/95
Fort Worth	68	7/94	76	3/95	81	8/95	86	1/96
Cleveland	69	8/94	77	4/95	82	9/95	87	2/96
Houston	70	9/94	78	5/95	83	10/95	88	3/96
Denver	71	10/94	79	6/95	84	11/95	89	4/96
Washington	72	11/94	80	7/95	85	12/95	90	5/96
Salt Lake	73	12/94	81	8/95	86	1/96	91	6/96
New York	74	1/95	82	9/95	87	2/96	92	7/96
Kansas City	75	2/95	83	10/95	88	3/96	93	8/96
Minneapolis	76	3/95	84	11/95	89	4/96	94	9/96
Albuquerque	77	4/95	85	12/95	90	5/96	95	10/96
Oakland	78	5/95	86	1/96	91	6/96	96	11/96
Memphis	79	6/95	87	2/96	92	7/96	97	12/96
Los Angeles	80	7/95	88	3/96	93	8/96	98	1/97
Miami	81	8/95	89	4/96	94	9/96	99	2/97
Indianapolis	82	9/95	90	5/96	95	10/96	100	3/97
Jacksonville	83	10/95	91	6/96	96	11/96	101	4/97
Boston	84	11/95	92	7/96	97	12/96	102	5/97

Major Milestone Schedule
Fig. 41-3

42.1 HCS. The ISSS requires the HCS by start of systems tests during integration at each site. This enables the checkout of data throughput from the Host to the CC display. The HCS was installed in the ARTCC's years before ISSS (1987-1988 timeframe). The following are a part of the HCS task of figure 42-1.

a. The HCS is required to be on line properly prior to ISSS installation and checkout testing that uses display data from the HCS.

b. Prior to ISSS installation the AAS contractor installs modified NAS en route, maintenance, and support software (S/W). This software supports dual operation of PVD's and CC's. It is installed prior to ISSS to establish confidence under PVD-only operations with the CC interface disabled.

42.2 Upgrade Power. The ISSS requires a power upgrade. With the installation of the ISSS the demand on the power that is supplied to the ARTCC is increased beyond its present capability. The parallel operation of the existing ATC equipment and the new ISSS equipment requires power in excess of the present supply capability. The success of the ISSS implementation is dependent upon the upgrade of the power supplied to the equipment. The two following subparagraphs discuss this power upgrade.

42.2.1 Commercial Power. The program office requests each region, by letter, to contact appropriate utility for upgrade of the electrical power requirements. Each region, in coordination with the ARTCC, is responsible to have the commercial line capability upgraded. This upgrade is required before start of the facility power plant modification. Refer to the power discussion in paragraph 32.3.1.

42.2.2 Facility Power. The facility power plant requires upgrade to accommodate the increased power demands of the Capital Investment Plan (CIP). Included in the site-specific design package is a modification of the ARTCC facility power plant. A discussion of this effort is included in paragraph 71.1.2.4. This upgrade brings the required

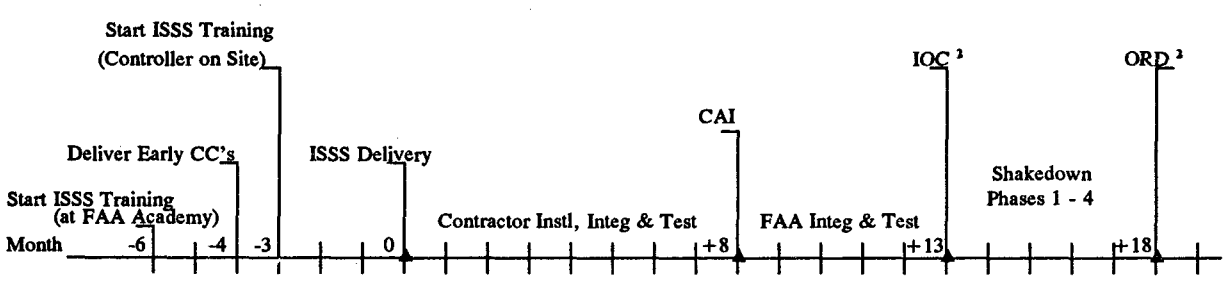

Shakedown Definitions (see paragraph 83.6):

Phase 1	3 days per Area.[1] Initial Controller ATC operations. Verify procedures, adaptation data, & acceptance of ISSS and the transition procedures.
Phase 2	Approx. 3 weeks.[1] Allows all of operational workforce to experience and develop proficiency in using CC's in an operational environment.
Phase 3	3 to 5 days per Sector.[1] Verify the interactions between sectors in one area, sectors in different areas, and complete area procedures.
Phase 4	1 to 4 weeks.[1] Conduct full center operations in the new control room to establish confidence prior to ORD.

[1] As determined by Site
[2] As determined by JAI Board

Generic Implementation Schedule
Fig. 41-4

critical, essential, and utility power to distribution panels in the room where the new equipment is to be installed. The region has the responsibility for accomplishing this work.

42.3 HVAC. The ISSS requires an HVAC upgrade. The addition of the ISSS equipment increases the amount of heat that is dissipated into the ARTCC. The success of the ISSS implementation is dependent upon the removal of the heat introduced to the facility. The site-specific design package includes a modification to the HVAC equipment. This upgrade is calculated to accommodate the total load of the ARTCC under worst case conditions. It is the responsibility of the region to accomplish this work. A discussion of this effort is included in paragraph 71.1.2.3.

42.4 Operational Space. The ISSS requires the provision of operational floor space 4 months prior to equipment delivery to provide for AAS contractor site fit-up work leading to the installation of the ISSS equipment. The appropriate amount of operational floor space for the ISSS project is defined in the site-specific design package. Providing a given number of square feet is not the whole picture. The space must be refurbished to specific operational requirements. Space planning is based on Order 4420.4, Space Acquisition. Subparagraphs 42.4.1 through 42.4.3 discuss the operational floor space preparations.

42.4.1 Asbestos Abatement. The ARTCC structure that existed prior to the four-bay expansion contains areas where asbestos was used as a heat shield or an insulation. It has been determined that asbestos is removed or abated (contained in place) coincident with any major refurbishment or renovation to the area containing the asbestos. For the installation of the ISSS, it is necessary to renovate and refurbish the two-and-a-half bay area between the four-bay expansion and the control wing side of the bridge. Before this refurbishment can start the following two activities are required. This effort is conducted under a regional contract.

42.4.1.1 Equipment Relocation. ARTCC equipment in use is located in two and a half bays including the area under the bridge. All such equipment is removed to allow refurbishment. It is necessary to relocate any equipment whose function is not essential for ATC operations, (as determined by site management, both AF and AT), to the adjacent automation wing. Where the equipment is moved is influenced by the required end state position. Equipment whose function is deemed essential on the operations floor is relocated to the end of M1 console rows to the aisles or wherever room can be found on the control room side of the bridge. The location is determined by region/ARTCC personnel. The equipment (required on the control room floor) is returned to the renovated area as determined by the facility in coordination with contractor work completion and AAS contractor site fit-up tasks.

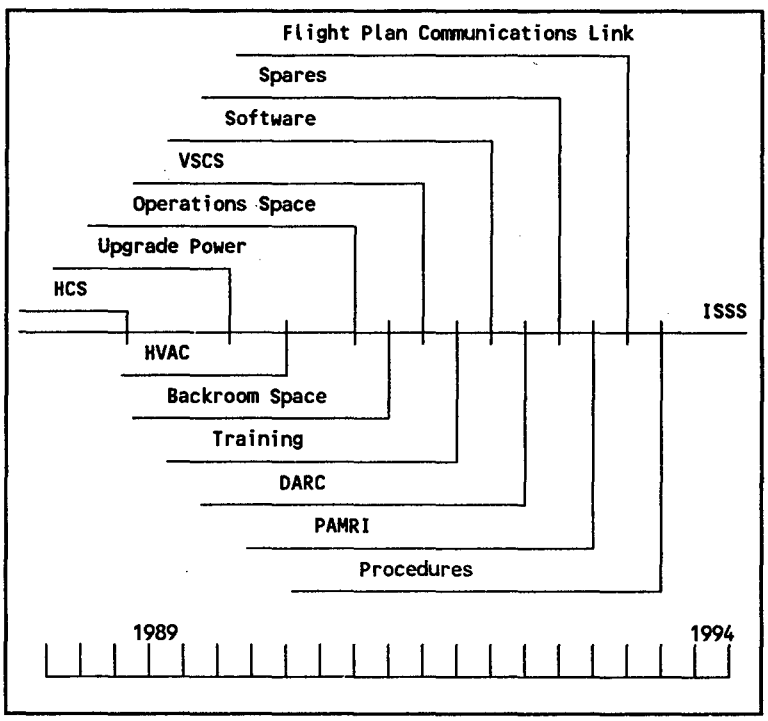

Interdependencies and Sequence
Fig. 42-1

42.4.1.2 Temporary Wall. Temporary wall construction is suggested at a location established during SAP site survey, determined by site personnel during E-complex transition planning (discussed in paragraph 31.3.), after equipment is removed from the area under the bridge. Site desired doors and windows are built into this wall. This wall allows refurbishment work without disturbing ATC operations. The specific location is coordinated with SEI contractor/R.M. Parsons for inclusion into the site-specific design package. The primary factor determining location is the number of CC's specified for ARTCC ISSS sector allocation including E-Complex. Consideration is given by site personnel to the possibility of using all or part of this wall twice, first to renovate the ISSS area, and second to renovate the M1 area after M1 console removal. The existing temporary wall that was built to permit the construction of the four-bay expansion will remain until sbestos abatement/removal is completed. When the asbestos abatement/removal effort is complete the original temporary wall is removed allowing about six-and-a-half bays for

the installation of ISSS equipment. This effort is conducted under regional contracts.

42.4.2 **Refurbishment**. After the temporary wall has been installed, the refurbishment work in preparation for ISSS installation is started. This effort consists of everything involved with preparing the surfaces of the six-and-a-half bay control room. The HVAC air exhaust and/or return ducts are installed. The ceiling receives hanging acoustical baffles. The walls and ceiling receive an application of acoustical surface. Specified lighting fixtures are installed. These efforts are accomplished under regional contracts.

42.4.3 **Raised Floor**. Work on the raised floor is started in the four new bays while work discussed in paragraph 42.4.2 is ongoing. An 18-inch high raised floor system with 2-foot square panels is installed. Cooled air is supplied and all signal and power cables placed in this space. Cable trays and conduit are attached to the raised floor supports or to struts bonded to the concrete floor as specified in the site-specific design package. This floor effort is accomplished under regional contracts.

42.5 **Back Room Space**. The ISSS requires provision of back room space, 4 months prior to equipment delivery, to provide for AAS contractor site fit-up work leading to installation of ISSS equipment. The appropriate amount of back room floor space (for ISSS equipment not located on the operations floor) has been allocated for successful implementation of the ISSS project. This space is specified in the site specific design package. A given number of square feet is not the whole picture. The space must be refurbished to specific operational requirements.

42.5.1 **Old Equipment Removal**. Old equipment, being vacated will be removed by the vacating project. The region should coordinate with vacating and gaining projects to determine the necessity to restore space to its original condition. Rehabilitation for ISSS, a region responsibility, will be funded by the center modernization project.

42.5.1.1 **Equipment Move**. In the case where planned equipment space is occupied by equipment remaining through the ISSS timeframe, such equipment will be relocated as required. It is moved to its end state or new temporary location to allow space refurbishment for ISSS equipment.

42.5.1.2 **Temporary Wall**. After completion of movement of necessary equipment, a temporary wall is constructed to isolate areas that need asbestos abatement/removal. Site desired doors and windows are built into this wall. This wall allows the work necessary for asbestos abatement/removal without disturbing the areas surrounding it. The location of this temporary wall is determined by site personnel. When the asbestos abatement/removal effort is complete the temporary wall is removed. This effort is conducted under a regional contract.

42.5.1.3 **Asbestos Abatement**. ISSS back rooms may contain areas where asbestos was used as an insulating shield. Areas not already having the asbestos removed/abated are accomplished while the above temporary wall is in place. This effort is conducted under a regional contract as per the site-specific design package.

42.5.2 **Refurbishment**. Once asbestos abatement/removal is complete, refurbishment work is started. This effort prepares surfaces of involved space. The walls and ceiling are painted and receive an application of acoustical material. Floor panels are to be carpeted with a special conductive carpet. Specified lighting fixtures are installed. This effort is accomplished under a regional contract.

42.5.3 **Raised Floor**. After wall and ceiling refurbishment work iscomplete, work on the raised floor is started. An 18-inch high raised floor system with 2-foot square panels is installed. Cooled air is supplied under this raised floor by air handling units that are installed on the raised floor. All signal and power cables are run under this raised floor. Cable trays and conduit are attached to the supports under the floor as specified in the site-specific design package. This effort is accomplished under a regional contract.

42.6 **VSCS**. The VSCS project precedes the ISSS project, and is commissioned in the M1 consoles prior to ISSS implementation. Additional VCE's are delivered to the AAS contractor, who in turn installs them into the CC's, when the CC's are installed at the site. These, along with VCE's in the M1 consoles, provide communications capability in both control rooms. This effort is coordinated by the AAS onsite coordinator with the AAS contractor, the VSCS contractor, and FAA headquarters (AAP-240). The following defines the coordinated efforts:

a. **Common Console VCE Integration**. The VSCS contractor develops a test program to verify performance of the VCE's installed in the CC's at the FAA Technical Center, the Mike Monroney Aeronautical Center, and the operational sites. The VSCS contractor develops and conducts all VCE CC integration tests in accordance with the Government approved test plans and test procedures with site-specific adaptation data.

b. Common Console VCE Cabling Design Planning. The VSCS contractor participates in a hardware design TIM with the Government and the AAS contractor to ensure that the VSCS design for CC cabling is consistent with the AAS design. Cable lengths are established at this time.

c. Common Console VCE Cabling. The VSCS contractor provides at VSCS delivery, cabling and associated equipment for the CC VCE's at the operational sites, the FAA Technical Center, and the Mike Monroney Aeronautical Center. The cables are provided with a connector on one end for connection to the VSCS. The VCE end of the cables are provided without a connector. The AAS contractor places the CC VCE cables in AAS provided cable trays.

d. Common Console VCE Activation. The VSCS contractor returns to the operational sites, the FAA Technical Center, and the Mike Monroney Aeronautical Center 12 months after VSCS site acceptance, or as directed by the contracting officer, to support integration of the CC VCE's with the VSCS. The VSCS contractor terminates the CC end of the VCE cable with a connector, connects and integrates the VCE with the VSCS, and tests the VCE in the CC's.

42.7 Training. The ISSS requires hardware, software, and man-machine interface training. Training is planned to be completed for maintenance personnel prior to CAI, and for ATC personnel prior to IOC. ISSS training is accomplished in accordance with the ISSS Training Plan. For a successful implementation of the ISSS, each site places a very high priority on accomplishing all training to the predetermined schedule defined in the training plan. For additional information on training please refer to paragraph 91.

42.8 Software. The AAS contractor, IBM, is responsible for the design, implementation, and testing of the modifications to the NAS software for ISSS. Since the NAS software continually evolves, IBM develops these modifications to the NAS software using the *A4e0.2* version baseline. The *A4e0.2* baseline with modifications for ISSS is used for ISSS acceptance test activities at the FAA Technical Center. IBM is also responsible for upgrading the modifications to the NAS software for ISSS to the current fielded version of the NAS software, *A4e0.y (y is the release number and is determined 5 months prior to the PAMRI FAA Technical Center acceptance)* for the ISSS Operational Test and Evaluation (OT&E) activities at each site through the implementation waterfall. The *A4e0.y* baseline with modifications for ISSS is also used for acceptance test activities at each site.

a. The National En Route Field Support/Maintenance Branch, ATR-420, prepares the IOC version of the NAS software with the ISSS modifications, *A5f0.0*. ATR-420 begins development of *A5f0.0* about 9 months prior to the ISSS acceptance at Seattle ARTCC and delivers *A5f0.0* to the Seattle ARTCC at the completion of Seattle acceptance.

b. There are several different other sets of software all of which the ISSS requires to operate as advertised and play together with all of the other software sets. IBM is responsible for design, development, implementation, and testing of all of the software for ISSS except that for VSCS and DARC. This includes software that runs in the HCS (NAS software with ISSS modifications), as well as separate software that runs in each of the following: CC's, BCN, PAMRI, and central processors. Software for the VSCS is the responsibility of the VSCS contractor. DARC software will be modified by IBM as part of the EDARC upgrade for use in ISSS.

c. The site personnel work together with the Technical Center personnel and the AAS contractor to install the site specific modification to the software.

42.9 DARC. The ISSS requires the correct operation of the DARC (including the DARC/HCS bidirectional interface) prior to ISSS autonomous mode testing. The AAS contractor installs equipment (i.e., ESI) that selects whether the DARC system is supporting either the M1 system, the ISSS system, or both.

42.10 Spares. The ISSS requires availability of LRU spares prior to any testing. Failures are common during the initial integration and checkout of a new system.

42.11 PAMRI. The PAMRI is really a part of the ISSS system; however, for the purposes of implementation, it is handled as a separate project. The ISSS requires PAMRI to be commissioned prior to any testing that uses data from the HCS. For specific information on the PAMRI, refer to the PAMRI PIP.

42.12 Flight Plan Communications Link (FPCL). The ISSS transition planning for implementation requires the FPCL to be operational prior to integration testing. The

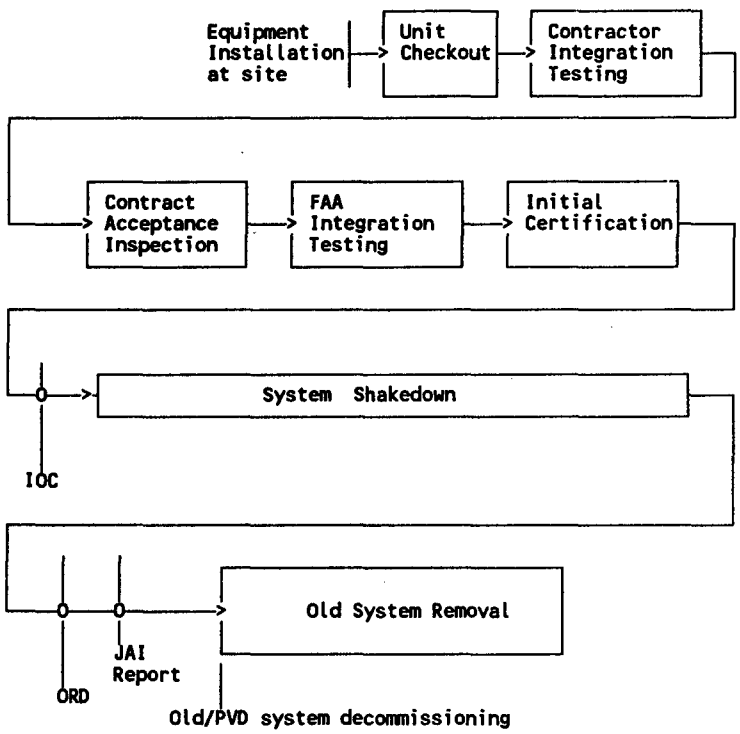

Verification Sequence
Fig. 43-1

FPCL is used to facilitate a consistent flight plan data base when switching from one Host processor operationally to the other Host processor. FPCL is used when DIFFERENT versions of the operational software are present in the two processors. This is used to avoid manual input of flight data during transition from one software version to another. The FPCL is the means by which one Host processor passes the flight plan data base to the other Host processor. This enables the system that is taking over ATC operations to start with the same flight plan data as the system that is giving up ATC operations.

42.13 Procedures. Procedures development and evaluation are discussed in paragraphs 58 and 82.2.2 herein.

43. VERIFICATION SEQUENCE. Figure 43-1 shows the relationship of the verification events for a given operational site. The blocks address a given system for an operational site. All verification events after equipment installation take place at the ARTCC site. A detailed description of each verification process is provided in chapter 8.

44.-49. RESERVED.

CHAPTER 5. PROJECT MANAGEMENT

50. PROJECT MANAGEMENT, GENERAL. The successful implementation of this project requires elaborate coordination and activities involving a number of headquarters, regional, and field organizations. Implementation activities also involve the FAA Technical Center, Mike Monroney Aeronautical Center, the AAS prime contractor (i.e., IBM), SEI contractor, and various support contractors. The following paragraphs provide a comprehensive listing of the organizations involved in the implementation by the area of responsibility within the ISSS project. The advanced automation system participants document (AASPD) provides a comprehensive listing of project management personnel and their respective areas of responsibility within the project.[1] Figure 50-1 identifies organizations with PRIMARY responsibility for the listed ISSS implementation and the management tasks.

Management Area	AAP200	ANS220	IBM	ACN130	ASM400	AAC400	AAC900	AHT400	AHT500	ATR320	ASM220	ASM260	ATR310	ATZ100
Sys. Implementation	X	X	X											
Facilities	X	X												
Test & Evaluations.	X		X	X	X									
Logistics & Training	X					X	X	X	X	X	X	X		X
ACF Other Systems													X	

Management Responsibilities
Fig. 50-1

51. PROJECT CONTACTS. Project contacts are described throughout this order and within the AASPD. Project contacts described herein are listed by organization only. The participants document lists name, title, Government and commercial phone number, and the complete mailing address.

51.1 Regional Representatives. Regional representatives have been designated for the ISSS project to assist with implementation. The list of regional representatives is contained in the AASPD.

51.2 ARTCC Onsite Coordinators. Onsite coordinators are listed in the AASPD. AT and AF coordinators are listed for each ARTCC.

51.3 FAA Technical Center Personnel. Project contacts for field personnel supporting testing at the FAA Technical Center are provided to the appropriate organization or facility prior to the assignment. Appropriate FAA Technical Center organizations have members on teams supporting AAS implementation. The members are listed in the AASPD.

51.4 FAA FAA Logistics Center Personnel. Appropriate organizations at the Mike Monroney Aeronautical Center have members, listed in the AASPD, on various teams supporting AAS implementation.

51.5 FAA Headquarters Personnel. Appropriate organizations at headquarters have members on various teams supporting AAS implementation. The members are listed in the AASPD.

52. PROJECT COORDINATION. Figure 52-1 presents the organizations that require coordination for the implementation of the ISSS.

53. PROJECT RESPONSIBILITY MATRIX. Figure 53-1 shows the organizations with primary responsibilities for each major ISSS implementation task. Figure 53-1 provides the paragraph number and title in the PIP for each task.

54. PROJECT MANAGERIAL COMMUNICATIONS. This paragraph:

a. Provides a listing of regularly scheduled project meetings and conferences, including frequency and duration where known.

b. Lists recurring upper level project reports, and their content.

c. Lists other communications such as newsletters, centralized computer network, and bulletin boards.

54.1 Meetings. Subparagraphs 54.1.1 through 54.1.4 define meetings and conferences for the ISSS project.

54.1.1 Contractor Sponsored. The following are meetings conducted by the AAS prime contractor.

a. Critical design review (CDR) was conducted in June 1988.

b. System Design Briefing, conducted 2 months after contract award.

c. TIM's, to be conducted with Program Monthly Reviews (PMR) as necessary.

d. Training conference was conducted 1 month after contract award.

Organi-zation	Organization Name	Coordination Requirements
AAC-400	FAA Logistics Center	Logistics Support
AAC-900	FAA Academy	Training Conduct and Review
AAP-200	Advanced Automation System Division	Transition Requirements Schedule and Interface Management
AAP-210	Systems Development Branch	Functional Requirements/Performance/RMA
AAP-220	Hardware Development Branch	ISSS, TAAS, ACCC, & TCCC Hardware
AAP-230	Software Development Branch	ISSS, TAAS, ACCC, & TCCC Software
AAP-240	Implementation Branch	Implementation and OT&E of AAS
AAP-400	VSCS Division	Procurement, Implementation & OT&E of VSCS
ACN-130	Advanced Automation Branch	Conduct of Testing and Evaluation, ACT
AHD-300	NAS Human Resource Management Planning and Research Division	Human Resource Planning
AHT-400	Airway Facilities Training Program Div.	Training
AHT-500	Air Traffic Training Program Division	Training
ANA-130	En-route and TMS Associate Program	HCS Software and FDIO
ANS-100	Transition Assessment Division	Integration with other CIP projects
ANS-220	ARTCC Program	Control of Configuration Management New buildings, building modifications,space Facility Power Allocations
ANS-420	NAILS Implementation Branch	Logistics and Training Support
ALG-340	Contract Management	Contract Management Support
ASM-120	Technical Standards Branch	CDRL Review
ASM-240	Future Programs Branch	Maintenance Concept & Planning
ASM-260	Operations Program Branch	Operational Maintenance Planning
ASM-310	Telecommunications Ops. & Admin. Branch	Leased Lines
ASM-400	NAS Automation Field Support Group	FAA Technical Center Shakedown, Testing Field Technical Engineering Support
ATM-100	Civil Operations	Day-to day System Operations
ATP-130	En route Procedures Branch	En route Systems Operations and Procedures
ATR-310	ACF Implementation Branch	Area Control Facilities
ATR-320	Requirements Branch	Air Traffic Operational Requirements
ATR-200	Automation Software Division	Operational Software
ATR-400	Air Traffic System Support	Air Traffic System Support
ATZ-100	AT Training Req. and Cert. Branch	Air Traffic Training Requirements

Project Coordination Matrix
Fig. 52-1

54.1.2 FAA Sponsored. Subparagraphs 54.1.2.1 through 54.1.2.11 discuss the meetings conducted by the FAA.

54.1.2.1 AF Transition Requirements Verification Team. The AF Transition Requirements Verification Team (TRVT), chaired by AAP-240, develops, reviews, and verifies engineering and maintenance requirements to ensure that planned AAS implementation steps meet objectives to support uninterrupted ATC service. The AF TRVT meets approximately four times per year.

54.1.2.2 AF Advanced Automation System Test Team. The Airway Facilities AAS Test Team (AFATT), chaired by ASM-400, defines the scope and procedures for AF AAS testing, develops requirements, and supports the Associate Program Manager for Test (APMT) develop test plans for OT&E. The AFATT participates in factory testing, developmental test and evaluation, OT&E, and site simulation at the FAA Technical Center. Further, the AFATT is generally responsible for monitoring the AF portion of OT&E.

54.1.2.3 AT Transition Requirements Verification Team. The AT transition requirements verification team (TRVT), chaired by the AT Advanced Automation System Requirements Branch, ATR-320, meets approximately four

Par Num	Paragraph Title	AHT	AAP10	AAP240	AAP210	AAP200	ACN130	ASM	AAF	ANS	ATR	ATP	Region	Site
54	Managerial Communications			X										
55	Implementation Staffing			X									X	X
56.2.1.9	NAS Transition Pln									X				
56.2.2.1	Project Impl. Plan			X										
56.2.2.3	Project Management Plan				X									
56.2.2.4	Master Test Plan					X								
56.2.2.5	OT&E Program Plan			X										
56.2.2.6	Test Reqs					X								
56.2.2.7	Int Log. Spt. Plan			X										
56.2.3.1	Regional Transition Plan												X	
56.2.3.2	Facility Transition Plan												X	X
56.3.10	Site Surveys			X										X
56.3.11	Test Readiness and Reports			X										X
57	Applicable Doc/DID			X										
58	AT Oper Procedures											X	X	X
60	Funding		X											
70	DRR Report			X	X									
70	Deployment R. R.			X										
71	Site Preparation			X									X	X
71.1.2	ARTCC Modernizatio								X					
71.5	Provide Site GFP													X
72	Delivery				X									
73	Installation (Incl VSCS)			X									X	X
81	Factory Verificati				X		X							
82.1	Installation and Integration				X									
82.2	ACT Verification (FAA)				X		X							
83.1	Contr. Int. Testing			X										
83.2	Contr. Acceptance Ins.			X										
83.2	CAI Report			X										
83.3	FAA Int. Testing			X				X						X
83.4	Certification							X						X
83.5	IOC												X	X
83.6	System Shakedown			X							X		X	X
83.7	Joint Accept Insp.			X									X	X
83.7.6	JAI Report													X
91	Training	X		X									X	X
95	Equipment Removal			X									X	X

Primary Responsibility Matrix
Fig. 53-1

times per year. The AT TRVT is responsible to develop AT transition requirements for each phase of AAS, except TCCC. It provides input to the national implementation plans for AAS segments. The team is also responsible for ensuring that the AAS contractor plans for uninterrupted ATC services throughout each segment implementation.

54.1.2.4 <u>AT Advanced Automation System Test Team</u>. The Air Traffic AAS Test Team (ATATT), chaired by ATR-320, defines the scope and procedures for the AT testing of the AAS. Further, the ATATT develops test requirements and supports the APMT in the development of OT&E test plans. The ATATT participates in factory testing, developmental test and evaluation, OT&E, and site simulation at the FAA Technical Center. Generally, the ATATT responsible for the AT portion of OT&E.

54.1.2.5 <u>Facility Operational Impact Group</u>. The Facility Operational Impact Group (FOIG) includes AF, AT, and SEI contractor representatives of the first four sites of the implementation schedule waterfall. The FOIG identifies facility operational issues and concerns impacting AAS implementation. The issues and concerns are operational in nature and could impact ongoing ARTCC operations or system operational acceptability. The FOIG also considers other projects that directly or indirectly impact the implementation of AAS. Group members share equally in the responsibility for communicating operational issues and proposed resolutions to: other ARTCC's, regional offices, FAA Technical Center, Mike Monroney Aeronautical Center, and headquarters offices.

54.1.2.6 <u>Sector Suite Requirements Verification Team</u>. The Air Traffic Advanced Automation System Requirements Branch, ATR-320, has the primary responsibility for the sector suite requirements verification team (SSRVT). The SSRVT meets seven times a year for 1 to 2 weeks. The SSRVT evaluates the man-machine interface of the sector suites and the functional/performance requirements for all AAS segments except TCCC.

54.1.2.7 <u>Air Traffic AAS Procedures Team</u>. The En Route Procedures Branch, ATP-130, has the primary responsibility for the AT AAS Procedures Team (ATAASPT). The team's objective is to identify, analyze, and validate procedural changes for the AAS.

54.1.2.8 <u>NAILS Management Team</u>. The national airspace integrated logistics support (NAILS) Master Plan, SM-88-005, calls for the formation of a NAILS management team (NAILSMT) to assist the program manager in planning, monitoring, and controlling a project contractor's NAILS activities. [2] The ISSS NAILSMT is responsible for:

a. Developing RFP/statement of work (SOW) logistics and training tasks.

b. Evaluating proposals.

c. Assisting negotiation of NAILS activities.

d. Conducting incremental reviews of contractor's NAILS Program.

e. Approving logistic support analysis (LSA) tasks.

f. Evaluating LSA data.

g. Providing direction on logistic support matters to the contracting officer's technical representative (COTR).

h. Resolving supportability issues and concerns.

i. Assessing the NAILS Program.

j. Providing formal comments based on assessments of program and design reviews.

k. Establishing a working interface with the contractor to achieve NAILS goals.

The NAILSMT includes several subgroups such as the AF and AT AAS training groups (AASTG), and the AF AAS certification subgroup. The AASTG's define AAS training requirements, review contractor training plans and schedules, and ensure that delivered training meets the requirements. The AF certification subgroup defines AAS certification requirements, reviews contractor design and certification program plans, and evaluates certification procedures. The logistics, maintenance, and documentation subgroups review contract status and provide guidance on the support areas relating to their specific areas of interest.

54.1.2.8.1 Provisioning Guidance Conference. A provisioning guidance conference was held 1 month after contract award. Specific guidance was given by the FAA on LSA record (LSAR) data elements required, data codes to be used, and rules for data submission. Schedules for data submission were also agreed upon for ISSS provisioning.

54.1.2.8.2 LSA Guidance Conference. An LSA Guidance Conference was held 1 month after contract award for the full AAS to provide the contractor with guidance and review preliminary material to accomplish the LSA data requirements.

54.1.2.8.3 Provisioning Conference. As a result of the provisioning guidance conference, provisioning conferences continue to be conducted with the AAS contractor. A subset of the NAILSMT is used for provisioning requirements for the ISSS. This includes the FAA Logistics Center provisioner, engineer, cataloger, contracting officer, NAILSMT chairperson, quality assurance officer and SEI contractor representatives. One long lead time items conference may be held separately from other provisioning conferences.

54.1.2.8.4 LSA Conference. As a result of the LSA guidance conference, logistics support analysis meetings are held with the AAS contractor as needed to discuss and define issues such as maintenance, support, provisioning, contractor contacts, ability and/or need to assume contractor responsibilities.

54.1.2.9 AAS Regional Representatives. Each region has appointed an AF and an AT AAS regional representative. The group is co-chaired by AAP-240 and ATR-320 and meets at least semiannually for AAS updates and discussion of matters of concern to the regions and/or field facilities. Regional representatives coordinate AAS implementation activities between headquarters, regions, and field facilities.

54.1.2.10 En Route Personnel. En route site personnel designated by the individual ARTCC's and regions perform the major onsite coordination activities (see paragraph 55). Meetings are held with en route site personnel prior to each major facility activity. Meetings are generally held at a central location when more than one site is involved, or at the facility when the subject matter is site specific.

54.1.2.11 Human Relations Briefings. Videotapes which introduce the novice to the AAS systems are available for the use of all facility and regional personnel. In addition to these video presentations, briefings are given to the general facility user at each region and site in conjunction with the en route meetings identified in paragraph 54.1.2.9.

54.1.3 FAA Technical Center. Headquarters, FAA Technical Center, and SEI contractor personnel meet on an ad hoc basis to complete OT&E planning, and to fully coordinate FAA Technical Center and field testing activities and responsibilities.

54.1.4 Mike Monroney Aeronautical Center. AAC-4 NAS Program Manager is responsible for coordination of all FAA Academy and FAA Logistics Center participation in the AAS Program.

54.1.4.1 FAA Academy. FAA Academy meetings take place to fully coordinate centralized training activities, training material reviews, CDRL reviews, and facility implementation activities. It is expected that these activities begin to accelerate just prior to the first ISSS training conference. Meetings occur as needed, but generally in line with contractor deliveries.

54.1.4.2 FAA Logistics Center. FAA Logistics Center meetings take place to fully coordinate and plan required activities such as CDRL reviews, provisioning conference

planning, and facility implementation activities. Meetings occur as needed, but generally in line with the coordination and planning of NAILSMT meetings with the AAS contractor.

54.2 Bulletins. The *AAS ISSS Tieline* is published periodically. AAP-240 has the primary responsibility for writing ISSS implementation material and distributing the *Tieline*. It is distributed to all ARTCC's, the regional offices, and selected FAA headquarters divisions.

54.3 Computer Net. AAP-240 has the primary responsibility for establishing and maintaining the ISSS project computer net.

54.3.1 FAA Electronic Mail. The standard FAA-wide electronic mail system is FAA.MAIL.[3] This system may be used by parties located in FAA headquarters, all field sites, the Mike Monroney Aeronautical Center, and FAA Technical Center. The FAA.MAIL system can be accessed on a stand-alone basis, i.e., modem or through the administrative telecommunications network (ADTN). It is currently expected that this system will be used as the standard electronic mail system for AAS implementation. FAA.MAIL is used for electronic message and data interchanges. This includes E-Mail "letters," PC data file transfers, and bulletin boards. Bulletin boards are established and maintained in the AAP, regional, center, facility, and project levels. There will be an ISSS Bulletin Board designated as ISSS.BB. This board is maintained by AAP-240 and contains general ISSS related information. The FOIG is using a special bulletin board for AAS segment coordination, PC files for status reports and FAA.MAIL for information exchanges.

54.3.2 MM Profs. SEI contractor uses a professional office system (PROFS) for internal coordination and to provide information flow between SEI contractor, Washington and SEI contractor onsite coordinators.

55. IMPLEMENTATION STAFFING. This paragraph details personnel requirements peculiar to the implementation phases of the ISSS. Personnel for post commissioning operational maintenance are not considered. Regional office and site positions are associated with the implementation of the ISSS.

55.1 Implementation Teams. A team of ARTCC/sector personnel is established under the technical direction of the onsite coordinators to provide technical expertise at the facility and to observe the onsite testing and verification activities. The implementation team consists of:

a. Hardware specialist (AF).

b. Diagnostics software specialist (AF).

c. NAS support software specialist (AT or software support group [SSG]).

d. NAS operational software specialist (AT or SSG).

e. En route controllers.

f. Airspace and procedures specialist (AT).

g. Plans and programs specialist (AT).

h. Training instructors (AT).

This team is supplemented by personnel from succeeding sites on the waterfall schedule, FAA Technical Center (ACN-130) as defined in paragraph 55.1.3, and the project implementation management group (AAP-240).

55.1.1 Team Training. It is highly desirable that team members have en route AF or AT experience at their particular site, and that team members be included in the earliest ISSS training allocations. Members of the ISSS implementation team participate in the FAA Technical Center activities which include site simulation testing, OT&E, and building of the site adapted software. Assignment of the personnel to support these activities is coordinated between the regions, the onsite coordinator, the site sector manager, and the site AT manager. If possible, members visit prior sites with similar equipment and participate in ISSS implementation to obtain implementation experience for their facility.

55.1.2 Team Responsibilities. The responsibilities of the team include involvement throughout the ISSS implementation process. Initially, the team assists the onsite coordinator in planning for site preparation and deployment. Later, the team monitors the contractor throughout installation, checkout, integration, and testing activities. Finally, the team supports FAA integration, testing, system shakedown, and equipment removal activities.

55.1.3 National Implementation Teams. The Advanced Automation Systems Branch of the Engineering, Test and Evaluation Service (ACN-130) plans to provide national implementation teams (NITs) to support ISSS site implementation. A team is deployed to each ISSS site prior to Government acceptance of the system. Each team consists of five personnel, with team expertise including two software personnel (one operational software, one adaptation), one systems person, one computer operator, and one human-computer interface expert. The NIT

activities include on-the-job-training (OJT)/familiarization of the site personnel as needed. The NIT is at the site for a maximum of 5 months for ISSS, starting at the beginning of system acceptance testing, about 2 months prior to Government acceptance at the site and ending some time prior to IOC.

55.2 **Labor Relation Organizations**. The AAS Program fully coordinates the implementation activities with AT and AF labor relations organizations such as National Air Traffic Control Association (NATCA) and Professional Airways System Specialists (PASS). Facilities action teams, area coordination teams, and Supcoms participate in the site implementation activities.

55.3 **NAS Plan Coordinator/NAS Implementation Manager**. These are positions located at each regional office with oversight responsibility. The NAS Plan Coordinator is the regional AF position and the NAS Implementation Manager is the regional AT position.

55.4 **ACF Coordinator/Assistant Manager for NAS Implementation**. These are the positions located at each ARTCC that are responsible for the coordination of all ACF-related activities at a particular ARTCC. The AF coordinator is called the Assistant Manager for Implementation; the AT coordinator is called the Assistant Manager for NAS Implementation (AMNI).

55.5 **AF and AT AAS/VSCS Onsite Coordinators**. The AAS provides two full-time, facilities and equipment (F&E) funded, positions at each of the 20 ARTCC's starting in FY-91. These are the AT NAS Implementation Specialist (NIS) and the AF onsite coordinator (OSC). Although AT has decided to call the AT OSC a NIS, in part to avoid the sense of a permanent assignment to any single project (vs CIP projects in general), the generic term applied to both AT and AF is OSC. They support the VSCS Program as well as the ISSS AAS segment. Both the AT and AF facilities OSC have a joint responsibility for almost all tasks. Figure 55-1 indicates the responsibilities for the AF and AT coordinators. In some tasks where the responsibilities are shared AF or AT might have the lead (L) responsibility, although all activities are coordinated. Generally speaking prior to IOC, the AF coordinator has the lead responsibility. After IOC, the AT coordinator has the lead responsibility. Areas of responsibilities of both OSC are as follows:

a. Planning.

b. Coordination and communications.

c. Installation and implementation.

d. Testing.

e. Administration and funding.

TASK	AT	AF
Become familiar with contractual requirements for ISSS.	X	X
Submit requests for overtime and travel funds to support implement'n coordination, planning, orientation, testing, and integration activities.	X	X
Monitor ISSS training progress.	X	X
Coordinate AAS contractor site surveys.	X	L
Ensure that government furnished software is handled according to the contract.	X	X
Ensure that site furnished items are ready for delivery to AAS contractor.	X	X
Coordinate delivery of ISSS equipment.	X	L
Coordinate the site review of the AAS contractors Site Activation Plan.	X	X
Monitor the AAS contractor's installation and tests.	X	X
Ensure the FAA test personnel are assigned for all cont & FAA testing.	X	X
Coordinate and monitor the AAS contractor's activities during the ISSS integration testing.	X	X
Ensure that the operational software used for site acceptance testing incorporates site adaptation.	X	X
Coordinate and monitor system acceptance testing.	X	X
Ensure that baseline test scenarios and analysis procedures are prepared and available.	X	X
Ensure that all tests required for system validation are documented.	X	X
Ensure issuance of test directives.	X	X
Distribute ISSS test reports.	X	X
Ensure NAS software meets operational requirements.	X	X
Ensure that system certification procedures are validated.	X	L
Coordinate AAS & SEI contractor support activities.	X	X
Coordinate FAA integration & test activities.	X	X
Coordinate system shakedown activity.	X	X
Ensure that the following reports are prepared: - IOC - Status - ORD	X	X
Coordinate the power switchover to the critical power bus.	X	X
Coordinate non-AAS support activities and support system installations for ISSS.	X	X
Participate in the decision to decommission old control room equipment.	X	X
Ensure old control room equipment is removed and disposed in accordance with ALG instructions.	X	L
Coordinate and monitor site refurb.	X	X
Ensure that program information and status is communicated to National, regional, and facility personnel.	X	X

AAS Onsite Coordinator Participation
Fig. 55-1

55.6 AAS Onsite Administrative Support. As a part of the F&E support funding to be provided to allow the F&E funded OSC, funding will also be provided to allow AAS related secretarial support.

56. POLICIES, PLANS, AND REPORTS. This paragraph describes the plans, policies, and reports referenced by this PIP.

56.1 Policies. The scope, content, and requirement for the plans described in paragraph 56 is established by the following policy documents.

56.1.1 NAS Design Documents. NAS System Requirements Specification (NASSR), and the NAS System Specification (Allocated Design) documents provide the NAS system performance and interface requirements for the 1995 NAS configuration.

56.1.2 NAS Transition Phase System Description Document. The NAS Transition Phase System Description Document has been prepared to provide a standard approach to planning, status compilation, and the control of all efforts involved in the transition of F&E (hardware and software) through the year 2000.

56.1.3 NAS Integrated Logistics Support Policy. The NAS integrated logistics support policy establishes the FAA NAILS Master Plan, SM-88-005, for the NAS projects.

56.1.4 FAA Test Policy Order. Order 1810.4A, FAA NAS Test and Evaluation Program, identifies responsibilities for test and evaluation of all NAS acquisitions and modifications. The order also directs compliance with FAA test terms and definition (NAS-MD-110) and FAA-STD-024 (Preparation of Test and Evaluation Documentation).

56.2 Plans. A number of different plans affect the directions of the site implementation which range from high-level NAS plans, to generic or site-specific program plans produced by individual regions. Figure 56-1 depicts a matrix of these plans.

56.2.1 NAS Documentation. NAS documentation which is available to support the local site-developed implementation plan is discussed in the following paragraphs.

56.2.1.1 Capital Investment Plan. The CIP, formerly called the NAS Plan, is the top level document that identifies the planned evolution of the NAS and the associated major research and development (R&D) and F&E Programs to accomplish it. Strategies and briefs as to program goals are also identified.

56.2.1.2 Interface Management Plan. The Interface Management Plan defines the production of the interface requirements documents (IRD) and interface control documents (ICD) and assigns responsibility for their accuracy. The plan is issued to assure agreement between the IRD's and the NAS system design, and identifies the status with regard to the baseline of each document.

56.2.1.3 Master Schedule System Implementation Plan. The master schedule system (MSS) describes the technique for preparing and coordinating time-referenced requirements for project support of the CIP. The MSS describes the time-related dependency between projects; defines the time requirements for integrating projects into site operations; defines the time requirements for CIP

FUNCTION	SYSTEM/ORGANIZATION LEVEL		
	NATIONAL AIRSPACE SYSTEMS	ISSS PROJECT	AF/AT FACILITIES
Program Management	CIP Master Schedule System Implementation Plan Interface Management Plan	Project Management Plan	Site Implementation Plan
Integrated Logistics Support	NAILS Master Plan	Integrated Logistics Support Plan	Site Implementation Plan
Training	NAS Training Plan	ISSS Training Plan (IBM CDRL # TR06)	Site Implementation Plan
Verification	NAS Verification Plan NAS Verification and Implementation Handbook	Master Test Plan OT&E Program Plan	Site Implementation Plan
Transition	NAS Transition Plan	Transition Concepts & Reqmts Project Implementation Plan	Regional Transition Plan Facility Transition Plan Site Implementation Plan

Plan Matrix
Fig. 56-1

implementation support organizations; provides the timely identification of actions required to fulfill program goals; and provides networks and bar-chart schedules with a time-reference for performance evaluations.

56.2.1.4 NAILS Master Plan. The NAILS Master Plan, SM-88-005, identifies NAILS requirements and provides guidance for implementing project NAILS programs into the overall NAS structure.

56.2.1.5 NAS Training Plan. The NAS Training Plan provides the general requirements and guidelines for training personnel on equipment being installed to upgrade the NAS.

56.2.1.6 FAA Technical Center Operations Management Plan. The FAA Technical Center Operations Management Plan defines the methods and procedures used to process NAS projects through the FAA Technical Center. By inclusion or reference, the plan provides the FAA Technical Center management operations; technical transition planning; and facility modification and checkout required to accommodate new projects. The plan also provides for the preparation, review, and approval of test plans and procedures, including test operations and the scheduling and status information of the FAA Technical Center verification activity.

56.2.1.7 NAS Verification Plan. The NAS Verification Plan and companion NAS Verification and Implementation Handbook (NVIH) are joint implementing documents of Order 1810.4. The verification plan provides an overall scheme for verification of NAS projects and designates organizations responsible for the various verification activities in compliance with this policy order.

56.2.1.8 NAS Verification and Implementation Handbook. The NVIH is a how to guide that defines verification standards, processes, and methods used in performing integration, installation, and test of projects (subsystems) required to upgrade the NAS.

56.2.1.9 NAS Transition Plan. The NAS Transition Plan (NTP):[4]

a. Presents the overall strategy for transition of the NAS and its facilities, equipment, and personnel from the present to the end state configuration.

b. Establishes the roles and responsibilities of the organizations involved in the transition process.

56.2.1.10 NAS Human Resources Plan (HRM). The NAS HRM Plan is a long-range plan for managing the human resource aspects of NAS modernization. The fiscal year 1990 NAS HRM Plan examines resource implications of only three NAS systems, but will be expanded to include additional systems and segments of the FAA work force.

56.2.2 Project Specific Plans. The following paragraphs discuss plans specific to the ISSS project.

56.2.2.1 Project Implementation Plan. This ISSS PIP is prepared and maintained by the Implementation Branch, AAP-240. The task of the PIP includes:

a. Providing an overall project description.

b. Describing the project schedules and status.

c. Describing the project management and responsibilities.

d. Describing project funding.

e. Describing the steps for deployment.

f. Describing the project's verification, testing, and evaluation.

g. Describing the implementation aspect of integrated logistics support.[5]

56.2.2.2 Related Project Plans.

a. The PAMRI PIP has been developed by AAP-240 and contains information peculiar to the PAMRI implementation, from site preparation to removal and disposal of surplus equipment.

b. The TAAS/ACCC PIP is being developed by AAP-240 and contains information pertaining to the implementation of TAAS/ACCC in the CONUS ARTCC's.

c. The TCCC PIP is being developed by AAP-240 and contains implementation information pertaining to the implementation of the TCCC equipment at FAA control towers, with related interfaces to airport equipment and the TAAS/ACCC.

d. The VSCS PIP is being developed by AAP-400 and contains information pertaining to the implementation of the VSCS in the ARTCC's.

56.2.2.3 Project Management Plan. The ISSS project management plan (PMP) is prepared and maintained by the

ISSS Project Management Branch, AAP-210. The task of the PMP includes:

a. Define the ISSS Branch functions and set forth responsibilities, guidance, and direction for AAS ISSS AP contract management.

b. Organize the management function to allow current organizational elements, both internal and external to the branch, to perform their respective roles.

c. Define the support to the COTR in the managing of the AAS contract towards successful completion of all contractual items.[6]

56.2.2.4 Master Test Plan. The Advanced Automation Systems Division, AAP-200, has the primary responsibility for the MTP. The MTP is a broad plan which relates test objectives to required system characteristics and critical issues.[7] The task of the MTP includes:

a. Integrating objectives, responsibilities, resources, and schedules for testing and evaluation.[8]

b. Showing the rationale for the type, amount, and schedules of planned testing.[9]

c. Relating the test and evaluation to reliability, maintainability, availability (RMA), and technical risks, operational issues and concepts, system performance, and logistics requirements.[10]

d. Explaining the relationship of the simulations, subsystem tests, integrated system development tests, and initial-operational tests to decisions to proceed to the next acquisition phase or into fully operational service.[11]

e. Addressing the testing and evaluation to be accomplished in each program phase.[12]

f. Integrating the Verification Requirements Traceability Matrix (VRTM)[13] for contractor conducted testing with the VRTM for FAA conducted testing.[14]

56.2.2.5 AAS OT&E Program Plan. The Implementation Branch, AAP-240, has developed an overall AAS OT&E program plan addressing each segment of the AAS implementation. This plan further defines procedures to be followed and responsibilities of different organizations during each phase of each segment of the OT&E process. Approaches to schedules for activities which lead to and include FAA conducted OT&E from the FAA Technical Center acceptance to site shakedown testing are described. A product of the OT&E activities will be the development of test procedures used in the execution of site shakedown. The scope of the task of the OT&E program plan includes the following:[15]

a. Clarifying the inter-service and inter-divisional relationships.

b. Establishing mechanisms to assure user participation in the OT&E planning and execution.

c. Clarifying mechanisms for assigning and committing resources to OT&E tasks.

d. Establishing accountability for executing the tasks associated with implementing the plan.

56.2.2.6 Test Requirements: Operational Test and Evaluation (OT&E) of the Advanced Automation, System. The Advanced Automation Systems Division, AAP-200, has the primary responsibility for the Test Requirements: OT&E of the AAS. This document can be useful in the development of a MTP for the AAS. The information contained in it includes the minimum requirements that the items under test are required to meet, unique prerequisites, completion criteria, and requirements on the content and conduct of each test. The test and evaluation activities, as defined, encompass the entire AAS procurement, including the ISSS. This document discusses the test and evaluation activities to be conducted during the acquisition phase (AP).

56.2.2.7 Integrated Logistics Support Plan. The NAILS Implementation Branch, ANS-420, has the primary responsibility under Action Notice 1800.13, Realignment of NAILS Functional Responsibilities, for the Integrated Logistics Support Plan (ILSP). The task of producing the AAS ILSP includes:

a. Describing the organizational structures and responsibilities for the planning and execution of the AAS logistics support program.[16]

b. Coordinating with the AAS prime contractor to ensure that logistics factors are considered during the system design process.[17]

c. Coordinating the supply support structure.[18]

d. Describing the support and test equipment.[19]

e. Describing the AAS training program.[20]

f. Describing the AAS direct work staffing requirements.[21]

g. Describing the AAS maintenance support facilities.[22]

h. Describing the packaging, handling, storage, and transportation requirements for AAS equipment.[23]

i. Describing the AAS documentation support.[24]

j. Defining the integrated logistics support (ILS) terms for AAS.[25]

k. Providing the AAS maintenance concept.[26]

56.2.3 Field Plans. Subparagraphs 56.2.3.1 through 56.2.3.3 describe the field plans that are applicable to the implementation of the ISSS.

56.2.3.1 Regional Transition Plan (Optional).[27] The regions should develop a transition plan showing how that region plans to transition to each of the projects at each of its ARTCC's. This plan includes the following:

a. Systems integration planning.

b. Project planning.

c. Regional training.

d. Logistics transitioning.

e. Facility engineering.

f. Operational planning.

g. Non-FAA equipment interfaces.

h. Human resource planning.

i. Transition problem solving.

56.2.3.2 Facility Transition Plan. Each of the regional AF and AT divisions prepare a Facility Transition Plan for each ARTCC within the region. This document addresses:[28]

a. Operations planning.

b. Procedures reviewing.

c. Non-FAA equipment interfaces.

d. Human resource planning.

e. Transition implementation planning.

f. Transition problem solving.

g. Disposition of old equipment.

56.2.3.3 Site Implementation Plan. An ISSS SIP is prepared by the NAS Coordination Office at each site. The SIP at the first site is prepared with participation of the First Sites Group and adapted by succeeding sites. This SIP includes:

a. Purpose and scope.

b. Project description.

c. Project schedule.

d. Facility project integration.

e. Management and responsibilities.

f. Human resource planning.

g. Funding.

h. Training.

i. Implementation activities.

j. Verification activities.

k. Maintenance.

56.3 Reports. Reports directly associated with ISSS implementation are described in subparagraphs 56.3.1 through 56.3.11.

56.3.1 Management Reports. Implementation activities are documented by these management reports. The purpose of these reports is to provide information for contract monitoring and to document problems that occur during the implementation effort. These reports are prepared under the authority of the OSC and distributed to the regional AAS representative and AAP-240.

56.3.2 Status Reports. The OSC (AT & AF) are responsible for the preparation of periodic status reports from the ISSS delivery to each respective ORD. Follow-on reports are required regarding equipment removal and follow-on rehabilitation. The reports are in narrative form

and are prepared weekly (or more frequently if circumstances warrant) to report activities conducted during the week and the outcomes of these activities. The periodic status reports summarize the week's test results, exception reports, implementation procedures, problems, implementation milestones, and solutions. These reports are used to expedite future AAS implementation efforts.

56.3.3 **Problem Reports.** The OSC (AT & AF) maintain a list of open items (problems that require resolution) throughout the ISSS implementation efforts. Problems are categorized as major (to be closed prior to IOC) or minor with an appropriate suspense date. These problems are entered into the information data base in the FAA Technical Center central support facility and are included in the periodic status reports that are submitted to AAP-240. When a specific problem is resolved, the associated open item is closed. The ARTCC maintains a log of all ISSS-related failures with the time that the failure occurred and the time that the equipment was returned to an operational state. This information is included in all problem and status reports to AAP-240. This data is used in the determination of the contractor's compliance with the system RMA requirements of the AAS contract.

56.3.4 **Initial Operating Capability Reports.** The OSC will send an IOC report upon declaration of IOC. The IOC report is in narrative format and is notification of IOC in accordance with Order 6030.45, Facilities Reference Data File.

56.3.5 **Final IOC Reports.** The OSC is responsible for the preparation of the final written report which is sent within 10 days after IOC. It summarizes all test activity between Operational Site Acceptance and IOC, including hardware, software, personnel, training, and support problems encountered during the period and the resolution of these problems.

56.3.6 **Operational Readiness Demonstration Reports.** The sends an ORD report upon completion of theOSC ORD. The ORD report is in narrative format and is notification of ORD in accordance with Order 6030.45.

56.3.7 **Final ORD Report.** The OSC is responsible for the preparation of a final written report which is sent within 10 working days after ORD. It summarizes all test activity between IOC and ORD, including hardware, software, personnel, training, and support problems encountered during the period and the resolutions.

56.3.8 **National Airspace Performance Reporting System.** In the event of trouble or failure within the ISSS (i.e., system interactions or contaminated data bases) which degrades ATC, the primary concern is continuing safe and efficient ATC. The test operators at the facility must ensure that actions are first taken to restore and/or continue ATC services and then report the problem to the test director who ensures that the problem is reported through the normal channels using the national airspace performance reporting system (NAPRS). The NAPRS is fully described by Order 6040.15, General Maintenance Handbook for Airway Facilities.

56.3.9 **Deployment Reports.** Deployment reports are prepared by the AAS contractor. They are submitted as part of both the SAP and the Site Readiness Review Report (SRRR). Shipping reports and incident reports are also included.

56.3.10 **Site Survey Reports.** Site survey reports are provided by the AAS contractor for each site to document the data essential for site preparation, including identification of any special problems or considerations, the summarization of pertinent technical data, and the coordination and assignment of critical action items. These reports result in the SAP and the SRRR.

56.3.11 **Test Readiness and Test Result Reports.** Reports are prepared for all tests that are conducted. These reports are completed for both before and after the subject test. The following subparagraphs discuss these reports.

56.3.11.1 **Test Reports.** Testing activities are documented by the reports described in this paragraph. The purpose of these reports is to provide information and data for contract monitoring and system evaluation.

56.3.11.2 **Contractor Interim Reports.** A test report is prepared by the contractor to document the results of each test and to identify and evaluate discrepancies between expected and actual test results. The test reports are maintained onsite and available for examination by the FAA. This includes all hard copy outputs, observer/operator logs, data reduction lists, and program listings.

56.3.11.3 **FAA Interim Reports.** A test report is prepared by the test manager for each test directive (TD). It contains all records and observations made during the test. The TD is filed locally, but is available to headquarters, regional, FAA Technical Center, or contractor personnel as required.

57. **APPLICABLE DOCUMENTS.** The list of applicable documents is provided in Appendix 2, Table of Documents. AAP-250 maintains a complete file of all documents applicable to the AAS procurement. AAP-240 provides copies of these documents to field organizations.

57.1 **Contractor Documentation.** The AAS contractor provides six documents in support of the implementation:

a. Site Preparation Design Information Package, CDRL item number AT02, Data Item Description (DID) number UDI-AAP-092.

b. Transition Plan (TP), CDRL item number AT05, DID number UDI-AAP-134.

c. Site Activation Plan, CDRL item number AT01, DID number UDI-AAP-055.

d. Site Readiness Review Report, CDRL item number AT03, DID number UDI-AAP-093.

e. Training Plan - ISSS, CDRL item number TR06, DID number UDI-L-FAA-110A.

f. Calibration/MeasurementRequirementSummary (CMRS), CDRL item number LG01, DID number DI-S-6177B.

A description of each of these documents is contained in subparagraphs 57.1.1 through 57.1.6. An overview of the delivery of the first four (these affect site planning) is shown in figure 57-1.

57.1.1 **Site Preparation Design Information Package.** AAP-240 has the primary responsibility for reviewing the ISSS SPDIP (CDRL AT02). ARTCC's and regional offices receive copies of the SPDIP for review and comment. As the primary organization responsible for reviewing the document, AAP-240 responds to written comments to formal circulation of the document way of a comment disposition list. The SPDIP identifies to the Government and designated facility design and construction agencies specific technical requirements upon which the facility ISSS design is predicated. This contractor input is used by the Government as input to the total site preparation bid and assures facility design is compatible with the AAS. This package is a **generic** design that is used as a baseline document for all ARTCC's, the FAA Technical Center, and the FAA Academy.

57.1.1.1 **Schedule.** The site preparation design information package is delivered to the program office not later than 5 months after contract award. The Government has 120 days for review and comments. The contractor updates the SPDIP with the resolved Government comments.

57.1.1.2 **SPDIP Contents.** The DID divides the SPDIP into seven sections. These sections are listed as follows. Refer to CDRL AT02 for specific details.

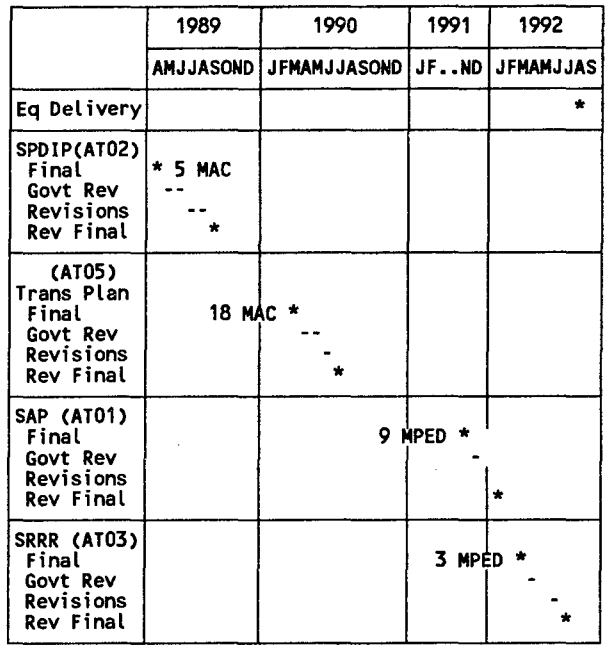

Delivery of Contractor Developed Documents
Fig. 57-1

a. Civil.

b. Architectural.

c. Structural.

d. Mechanical.

e. Electrical.

f. Hazards.

g. Legal Compliance.

57.1.2 **Transition Plan.** AAP-240 has the primary responsibility for reviewing the ISSS Transition Plan (CDRL AT05). ARTCC's and regional offices receive copies for review and comment. As the primary organization responsible for reviewing the document, AAP-240 responds to written comments to formal circulation of the document by way of a comment disposition list. The plan will address each phase of the AAS implementation describing the contractor's methodology from transitioning from the current system to the ISSS. It includes a description of the work efforts, test efforts, training efforts, and hardware and software requirements for accomplishing the transitions. The transition plan also contains:

a. The method to accomplish each transition.

b. Identifications of hardware, software, and software capabilities required to install and test the system in the ATC facility.

c. Plans and procedures for switching ATC operations between the new and old configurations so as to provide uninterrupted operation.

d. Identification of changes to and impacts on ATC operations during the transition steps.

e. Identifications of changes to and impacts on ATC operations and maintenance procedures and facility resources during the transitions.

57.1.2.1 Transition Plan Schedule. The transition plan is delivered 18 months after contract award. Although the ISSS Transition Plan is applicable to every site, it is not unique to a specific site; therefore, only one transition plan is delivered for each segment.

57.1.3 Site Activation Plan. AAP-240 has the primary responsibility for reviewing the ISSS SAPs (CDRL AT01). Each facility and regional office receive copies of the appropriate SAP's for review and comment. As the primary organization responsible for reviewing the document, AAP-240 responds to written comments to formal circulation of the document by way of a comment disposition list. This plan applies to the 20 ARTCC's, three special sites, the applicable ATCT's, the Mike Monroney Aeronautical Center, and the FAA Technical Center. It contains volumes that apply to the PAMRI, ISSS, TAAS, ACCC, and TCCC. The purpose of the plan is to define the Government and the contractor requirements and responsibilities, on a site-specific basis. It is used to coordinate the site deployment, installation, initial checkout, test and integration efforts required for the AAS segments at each site. The SAP also defines the site activation support services that the contractor expects to provide from IOC through ORD at each site. The SAP is subordinate to the Transition Plan and is site-specific resulting from a site activation survey.

57.1.3.1 Schedule. The SAP is delivered to the program office 9 months prior to equipment delivery to that site, for Government review and comments. (See figure 41-2 on page 4-2 for the equipment delivery schedule to the ARTCC sites). The Government has 45 days for its review cycle. A site-specific SAP with comments incorporated arrives at each site 7 months prior to equipment delivery to that site.

57.1.3.2 Contents. The plan shall contain, on a site-specific basis, the detailed narrative, graphic, and material requirements necessary to receive, install, check-out, test, and integrate the operational parts, components, subsystems, systems, and support equipments for each segment and each site listed in the contract. The plan identifies required Government equipment and resources not listed in the AAS contract GFP document.

57.1.4 Site Readiness Review Report (SRRR). AAP-240 has the primary responsibility for reviewing the ISSS SRRR (CDRL AT03).[29] The SRRR is the final prime contractor effort leading to deployment of the system at each site. Following tentative completion of the site preparation work, but not later than 3 months before equipment delivery, the contractor performs a final inspection at each site and submit his/her SRRR. The report states either that the site is ready to proceed with installation or identifies those items specified in either the SPDIP or the SAP that have not been accomplished, provides a schedule for completion or an acceptable work-around, and provides a statement of risk for each solution. A new SRRR is required at completion of any additional work identified. This report is presented after the completion of each site readiness review survey and documents the findings of the site readiness review survey following tentative completion of the site preparation work at the site. It describes the new and remaining site deficiencies which need to be corrected before system delivery. It serves to identify what site preparation work is still required after tentative completion of the site remodeling to make the site ready for the system delivery without problems.

57.1.5 Training Plan. The Implementation Branch, AAP-240, has the primary responsibility for reviewing the Training Plan (CDRL TR06). As the responsible agency for training quality, the FAA Office of Training and Higher Education (AHT) should be involved in review and approval of the training plan. ARTCC's, the services, the FAA Academy, and regional offices also receive copies for review and comment. The plan includes the design, development, production, and purchase of all training hardware, software, courseware, and instructional methods for the ISSS. The plan addresses both the contractor provided and the Government provided training activities. In particular the training plan provides:

a. Instruction methods, class size, course duration.

b. Objectives, prerequisites, achievements, measurements.

c. Outcomes.

d. Required equipment.

e. Locations.

f. Synopses.

g. Instructor training and numbers.

h. Schedules.

57.1.6 Calibration/Measurement Requirement Summary (CMRS). The CMRS provides a list of all Test Measurement and Diagnostic Equipment (TMDE). The CMRS outlines the measurement parameters, specifies ranges, provides accuracy requirements, and provides calibration intervals for each echelon of measurement. The CMRS is used to assure traceable accuracy of measurement through individual service calibration programs to the National Bureau of Standards or the Naval Observatory.[30]

57.2 Site-Specific Design Package. The site-specific design package contains all the information identified for the SPDIP as adapted to each specific site. These documents are created by the SEI contractor/R.M. Parsons for each ARTCC under sponsorship of ANS-220. They are used by the regions to develop engineering and contract generation data for preparation of a given site to install the ISSS. ANS-220 has the primary responsibility for producing the packages. AAP-240 has the primary responsibility for assuring that the regions and sites obtain the packages for review and use. The regions have the primary responsibility for the engineering and implementing the design through construction work contracts and reporting progress on the resulting schedules.

58. AIR TRAFFIC CONTROL PROCEDURES.[31] During the ISSS period the NAS HCS software with minimal modifications is used to control air traffic. There are no changes in separation standards with the implementation of ISSS. However, there are major impacts to controller operating procedures. There are changes in the display and manipulation of flight data associated with the introduction of electronic flight data entries and flight data entry notations which replace paper flight progress strips and strip marking. The changes include new data input and output devices and new data formats. New color consoles with new display formats replace PVD's and M1 consoles. Some new functions associated with the new consoles are introduced, e.g., windowing, scrolling, and use of logical displays. Display formats for flight data and FDE's are new and can be adapted for controllers or sectors. These changes and new features directly affect ATC operating procedures. There will be a period of planning during which national and site ATC procedures, and facility operating and administrative procedures are reviewed and changes attendant to the ISSS are developed and validated.

58.1 National ATC Operating Procedures. All national orders and directives concerning ATC, and ATC facility operations and administration will be reviewed for changes necessary for the operational use of the ISSS. This includes the use of electronic display and notation of flight data (FD) as well as the new ISSS features (windows, scrolling, logical displays, adaptable data, and FD formats). National ATC requirements for transition procedures between PVD and ISSS operations are developed and validated.

The preparation and review of ATC ISSS operating procedures is the responsibility of the Procedures Division, ATP-100, of the Air Traffic Rules and Procedures Service. They review all existing ATC operating and administrative procedures, orders, and directives. They then develop and validate changes necessary to accommodate the operational ATC use of ISSS. The En Route Procedures Branch, ATP-130, develops ATC procedures for the operational transition of ATC operations between PVD's and ISSS. These procedures are validated by a team of operational controller personnel during FAA Technical Center OT&E testing. Once validated, the procedures are published as interim ISSS ATC operating procedures and transition requirements. This is accomplished prior to the first site installation and the start of controller training. Controller training for the ISSS includes the new ATC procedures for operational use and transition. Subsequent to the new procedures validation they are incorporated into appropriate national orders and directives.

58.2 Site ATC Standard Operating Procedures. Site ATC standard operating procedures (SOP) are reviewed for change as necessary to incorporate national interim ATC procedures and transition requirements and new ISSS features and formats. Site ATC procedures for the transition of operations and responsibilities between PVD and ISSS operation are developed.

Air Traffic Facility Management, staff, and controller personnel review national interim ISSS operating and transition requirements published by ATP-130. They develop and validate all changes necessary to the site's existing ATC SOP's. This includes AF maintenance and certification procedures associated with support of the ISSS. They also develop procedures for the transition of ATC operations and responsibility between the PVD and ISSS operation. These changes are developed and validated during site FAA integration and test. They are initially established and fully validated prior to IOC of ISSS for that site. They are refined, if required, during site system shakedown.

59. Human Resource Management Planning. Human resource (HR) planning is critical to the success of project implementation. The purpose of HR planning is to ensure, well in advance of system deployment, that there are sufficient numbers of qualified, trained personnel to staff facilities and to work positions created or affected by the addition of new equipment. The ARTCC Resource Requirements Plan (ARRP) was developed by the ARTCC Resource Requirements Team to compare HR requirements for implementing the CIP projects. This plan projects availability at the facilities and provides recommendations to mitigate the facilities' staffing shortfall for achieving CIP objectives (from the ARRP, Executive Summary). Additional data were collected and analyses performed based on the original ARRP so that the FY 1990 NAS HRM Plan supersedes the ARRP. An action plan is under development to implement the recommendations that were documented in the NAS HRM Plan. Coordination promotes consistency between national and facility planning. The HR organization contributes to the development of and addresses issues in the facility transition plan and SIP. The onsite NAS Coordination Office (NCO) is responsible for preparation of a Human Resource Impact Statement (HRIS), to be included in SIP's, which is reviewed by the appropriate program office and coordinated with regional Human Resource Management Offices (HRMO), the NAS Transition and Implementation Service (ANS-100), and NAS HRM Planning (AHD-300). Training issues are addressed in the HRIS. The action plan and the HRIS should be reviewed and coordinated by AHT-400, AHT-500, and AHD-300. Data collected from each facility helps form the basis of a national HR management plan and facilitates action planning to consider and resolve outstanding HR issues. The following key areas are addressed in the HRIS:

a. Operations and Maintenance Staffing.

(1) Numbers of AT and AF personnel by specialization required to field, maintain, and operate the system.

(2) An analysis of the projected availability of qualified personnel to field, maintain, and operate the system.

(3) Identification of projected personnel shortfalls and facility plans for recruitment/staffing.

b. Communications/Workforce Acceptance. Description of facility plans to provide employees with information about the new system and its impact on employees prior to training and installation/implementation. Attention is focused on special HR transition problems or requirements associated with deployment to include, where appropriate:

(1) Changes to procedures and new procedures related to the new system.

(2) Training planning.

(3) Labor relations.

c. Training.

(1) Identification of all FAA Academy, site, or contractor-provided courses and training provided in support of this project by AT/AF specialization.

(2) A description of training plans to support this project to include projected class schedules and support requirements (equipment, facilities, materials).

(3) Analysis of the knowledge and skill, by AT/AF specialization necessary to field, maintain, and operate the new system.

CHAPTER 6. PROJECT FUNDING

60. GENERAL FUNDING STATUS. Funding for the multiyear AAS program is a responsibility of the Program Manager for Advanced Automation. Funding for each segment is a part of the total AAS Program. This PIP does not address funding for the prime system procurement or include dollar amounts for any portions of the program. It does include the region/facility work efforts that require funding.

61. REGIONAL/FACILITY COST ESTIMATES. The Program Management Staff, AAP-10, with support from the regions and the SEI contractor have developed F&E cost estimates for field implementation of each segment of the AAS program. The descriptions here are general and do not cover every cost that can be incurred. The estimates include the following ISSS categories.

a. Regional office engineering - covers the salary and per diem for regional F&E personnel.

b. Major site construction (contract) - covers contract awards for major construction.

c. Site preparation - salaries and per diem for field F&E personnel and required materials.

d. Resident Engineers - salaries and per diem for monitoring of major site construction.

e. Technical onsite representative - salary and per diem to monitor electronic installations.

f. Travel - appropriate travel for regional office and facility personnel.

g. Overtime - operations personnel overtime.

h. Equipment relocation - relocation of equipments that remain in use but must be moved to allow installation of ISSS.

i. Equipment removal and disposition - removal and disposition of obsolete equipment.

62. ISSS PROJECT FUNDING.[1] The cost estimates cover ISSS site preparation requirements defined in the following subparagraphs. Paragraph 63 categorizes various segments of the program and documents the funding vehicles for successful execution of the program.

62.1 Regional Engineering and Field Support. The regions are responsible for facilities engineering and field support related to ISSS.

62.2 Major Site Construction (Contract). The SEI contractor/R.M. Parsons, with regional review, provides the regions with a bid-ready construction package for preparing the approximately six bays needed for ISSS implementation. The package includes back room work as required. AAP-240 provides funds in accordance with paragraph 63. ANS-220 provides the funds for asbestos removal.

62.3 Site Preparation. The regions use the F&E work force or contract to accomplish the relocation requirements contained in subparagraph 62.1. These relocations are completed prior to start of construction discussed in subparagraph 62.2.

62.4 Resident Engineers. The regions provide resident engineers to monitor the construction contract awarded in subparagraph 62.2.

62.5 Technical Onsite Representative. Funds are provided to staff an onsite representative to be onsite before the equipment arrives and remain as required until the project is complete. The representative may be an ARTCC existing employee.

62.6 Travel. Travel funds are provided to support appropriate meetings, testing, and site visits.

62.7 Overtime. Overtime is required during transition, testing, and cut-over from the PVD's to the CC's. The use of overtime is determined by the appropriate region and facility managers.

62.8 Equipment Relocation. Regional office engineers are required to support the site preparation effort while it is in progress. This includes responsibilty for engineering to relocate existing equipments within the temporary wall and the four-bay expansion.

62.9 Equipment Removal and Disposition. The regions are required to remove and dispose of equipments made obsolete by the ISSS installation, see paragraph 95. AAP-240 provides region/center property managers with disposition instructions prior to removal.

63. F&E PROJECT FUNDING DISTRIBUTION. Funds are distributed on a fiscal year basis as soon after

the start of the fiscal year as possible. Four separate project authorizations (PA) are issued for the program.

63.1 Personnel Compensation Benefits and Travel (PCB&T). This estimate includes the following categories (System Code 810):

a. Regional Engineering. This covers salary, per diem, and travel cost for regional F&E personnel. Work category examples include regional engineering, PCB&T expenses for site preparation, and resident engineers.

b. Technical Onsite Representatives. Personnel, compensation, and benefits funding for technical onsite representatives is provided.

63.2 Travel and Overtime Charges. This estimate includes funding for nonstandard travel and overtime costs for operations appropriations funded personnel who work on the AAS Program (System Code 840 for AAS and VSCS only).

63.3 Major Site Construction. This estimate covers contracts awarded for major construction.

63.4 Equipment Material & Services. This PA is for material, services, and equipment contracts to support ISSS implementation.

Descriptions listed above are general and not intended to cover every cost category that can be incurred.

64. PRIME FUNDED, SUPPORT ITEMS. The contract includes options, in 1-year increments for up to 9 years, for hardware maintenance, software support, and technical support. These options are in addition to the 1-year basic requirement for these services. Extensions of the options to succeeding years is an operational funding responsibility.

64.1 Support and Services.[2] The following items are provided for a period of 1 year for all appropriate units.

a. Commercial software lease in accordance with SOW paragraph 3.7.4.2.

b. Software maintenance support in accordance with SOW paragraph 3.13.1.

c. Engineering service in accordance with SOW paragraph 3.13.1.

d. Noncommercial hardware repair, restoration, and supply support in accordance with SOW paragraph 3.13.2.

e. Commercial hardware repair, restoration, and supply support in accordance with SOW paragraph 3.13.2.

64.2 Training.[3] The following items are provided:

a. Training services in accordance with SOW paragraph 3.9.2 to conduct up to 20 ISSS Air Traffic Course Sets, detailed in the approved ISSS Training Plan.

b. Training services as detailed in the approved ISSS Training Plan for five AF and software course sets at the FAA Academy in accordance with SOW paragraph 3.9.4.

c. Training services in accordance with SOW paragraph 3.9.2 to support FAA Academy training units in the development and modification of ISSS training materials and courses during all phases of transition.

d. Training services and engineering support in accordance with SOW paragraph 3.9.2 for OT&E and selected FAA Academy students.

e. The approved final version of the ISSS AT course curriculum material is provided.

f. The approved final version of the ISSS AF course curriculum material is provided.

64.3 Consumables.[4] Consumables in accordance with SOW paragraph 3.5.6 are provided for 1 year of ISSS hardware and peripheral equipment operation. This includes paper, ribbons, magnetic tape media, magnetic tape racks, fuses, lamps, filters, miscellaneous operational materials and expendables.

64.4 Logistics.[5] FAA Logistics Center ISSS Repair Facility, in accordance with the Depot Maintenance Study (CDRL LG02) is provided.

64.5 Spares.[6] All spare parts, test equipment, and tools determined by the Government for maintenance of the ISSS in accordance with SOW paragraphs 3.5.6 and 3.5.7 is provided.

65.-69. RESERVED.

CHAPTER 7. DEPLOYMENT

70. GENERAL DEPLOYMENT ASPECTS. The AAS Division (AAP-200) has the primary responsibility for conducting the Deployment Readiness Review (DRR) for the ISSS per Order 1800.63, National Airspace System Deployment Readiness Review Program. The DRR supports a determination by the DRR Board and the NAS Program Director that the ISSS is ready for delivery to the first operational site. AAP-200 is responsible for leading the review process and presenting a report to the NAS Program Director who has the final decision responsibility for system deployment. The following lists the various steps included in the DRR process.[1]

a. Validate DRR items in solicitation package (pre-DRR process).

b. Initiate DRR process (initial review and announce DRR team meeting).

c. Convene DRR team meeting [12 months prior to delivery to the test and evaluation site].

d. Monthly project checklist updates (every 30 days following initial DRR team meeting).

e. Mid-term review.

f. Delivery to test and evaluation site.

g. Shakedown test completed.

h. Submit DRR report (1 week after completion of shakedown test).

i. Deployment decision [DRR executive committee (EXCOM) meeting].

j. System delivered to first operational site or system delivered to the FAA Logistics Center.

k. Monthly open action item status reports (every 30 days following deployment decision).

l. Post deployment review.

70.1 Deployment Readiness Review Team. AAP-200 establishes a DRR team. The following organizations are invited to send a representative to each project DRR Team and participate in the process in accordance with the provisions of the order.[2]

FAA Headquarters

Systems Maintenance Service	ASM
NAS Transition and Implementation Service	ANS
Program Manager for Advanced Automation	AAP
Program Director for Automation	ANA
NAS System Engineering Service	ASE
The Office of the Associate Administrator for System Engineering and Development	ASD
Logistics Service	ALG
The Office of Air Traffic System Management	ATM
Air Traffic Rules and Procedures Service	ATP
Air Traffic Plans and Requirements Service	ATR
Air Traffic Program Management Office	ATZ
Flight Standards Service	AFS
Civil Aviation Security	ACS
Program and Resource Management	APR
Aviation Standards National Field Office	AVN
Labor and Employee Relations	ALR
Human Resource Development	AHD
Training and Higher Education	AHT

FAA Centers and Regions

FAA Technical Center	ACT
Mike Monroney Aeronautical Center	AAC
Airway Facilities Division	All Regions
Air Traffic Division	All Regions
Flight Standards Division	All Regions
Civil Aviation Security Division	All Regions
Logistics Division	All Regions

Others

DOD NAS Plan Requirements Office	ASD-7
Systems Engineering and Integration Contractor	SEI

70.2 Deployment Readiness Review Checklist. This element of the process provides a structure to ensure all significant areas of concern are addressed during the review. The following lists the section numbers and titles of the DRR checklist:[3]

Section 1.	NAS System Requirements
Section 2.	Maintenance Planning
Section 3.	Project Implementation
Section 4.	Contract Status
Section 5.	Configuration Management
Section 6.	Facility/Site Preparedness

Section 7.	Test Program
Section 8.	Software and Firmware Integration and Maintenance
Section 9.	National Airspace Integrated Logistics Support
Section 10.	Training
Section 11.	Staffing
Section 12.	Communications
Section 13.	Man-Machine Interface
Section 14.	Automated Information Systems Security Effectiveness
Section 15.	General

71. **SITE PREPARATION**. The site preparation for the installation of the ISSS equipment is a project within the ISSS project. This paragraph divides site preparation into major sections: facility modernization, requirements, planning, execution, provisions of GFP, and security. In an ideal world, site preparation proceeds from the requirements phase, through the planning and execution phases, to the evaluation phase in four sequential steps. In the world of ISSS site preparation, the ISSS is just one of four AAS system segments that require site preparation in the ARTCC's during the years between 1986 and 2006. The ISSS shares in a master site preparation effort that takes into account the addition and deletion of the equipment as follows.

a. Additions.

(1) Host Computer.

(2) PAMRI.

(3) VSCS.

(4) ISSS.

(5) TAAS.

(6) ACCC.

b. Deletions.

(1) Radar Bright Display Equipment.

(2) 9020 Computers.

(3) PAM's.

(4) WECO-300 Telephone System.

(5) Radar Display Channel Equipment [computer display channel (CDC) or display channel complex (DCC)].

(6) PVD's.

As these various additions and deletions take place, the demands for architectural, mechanical, and electrical services vary.

71.1 Facilities Modernization. This paragraph provides an overview of the impact on the ARTCC facilities resulting from the ARTCC transitioning to the new AAS systems listed in paragraph 71. The impact presented is based on existing requirements and assumptions as noted herein.

71.1.1 Transition Impact. The facility transition from Host PVD's to ISSS requires additional space for a new control room to accommodate a large number of sector suites/CC's. It also requires the renovation of existing ARTCC areas for new AAS/ISSS systems such as computer(s), local communications network, interface equipment, and DARC system interface. Consideration is given to NAS replacement systems such as radio control equipment (RCE) and VSCS. The transition requires major modifications to ARTCC chilled water plant as well as major expansion of the ARTCC power system. When ISSS is installed and integrated, the average ARTCC's power and cooling requirements are almost double 1987 loads. There is a significant reduction in power and cooling requirements when M-1 Consoles/PVD's and CDC/DCC computers are decommissioned and removed. However, the load will increase again due to subsequent installation of terminal and more en route CC's with new ARTCC computer and other NAS systems.

71.1.2 ARTCC Modernization. Of the 20 CONUS ARTCC's, 18 are considered "Standard" (similar) in structure. These are divided into right-hand and left-hand types. The right-hand type is a mirror image (plan view) of the left-hand type. The structures that house the Houston and the New York ARTCC's are of different or nonstandard configurations. The equipment housed therein and the functions provided are equivalent to the other CONUS ARTCC's. Each standard ARTCC facility is comprised of three floors: basement, first floor, and second floor. Each floor is divided into automation wing, control wing, and administrative wing. There are four major facilities activities/improvements or modifications to the standard ARTCC's required to support the delivery and operation of AAS/ISSS equipment and associated NAS systems (VSCS/RCE). These four activities for convenience are listed here as improvements and are described in the following subparagraphs.

71.1.2.1 First ARTCC/ISSS Improvement - Chilled Water Plant Rehabilitation. In order to support ISSS and to meet future ARTCC cooling needs, obsolete cooling

towers, chillers, and pumps are replaced with larger units and one additional chiller is provided. These modifications began in late 1988 at the Seattle ARTCC and when completed, provide improved reliability and additional cooling capacity to support the transition to ISSS and ACF. The improvements are accomplished in two steps.

a. First, the two oldest chillers are replaced.

b. Second, an additional chiller is installed to provide increased capacity.

The two remaining chillers are proposed to be replaced at a later date. Other center air conditioning modifications are included in basement and control room modification package 1 and 3 described in subparagraphs 71.1.2.2 and 71.1.2.3. These improvements include replacing and increasing the size of air handling units in the Control Wing basement and first floor.

71.1.2.2 **Second ARTCC/ISSS Improvement - Control Wing Basement Modification Package. No. 1**. This improvement, identified for facilities funding and control purposed as CWBM Pkg #1, renovates the majority of the Control Wing Basement Area in preparation for installation of NAS systems, RCE and VSCS, providing raised floor, lighting, air conditioning, and halon fire suppression system. This modification package includes basement area no. 1, and is based on standard ARTCC design with site-specific designs for each of the standard ARTCC's. This design assumes that all existing overhead control/signal cables and cable trays for obsolete equipment have been removed by FAA/ARTCC personnel. It also assumes that asbestos removal in the basement is required only on piping, valves, and fittings. Not included in this package is the relocation of functions displaced by the modification such as office or maintenance space. The basement design requires an 18-inch high raised floor system with ramps down to existing concrete floor particularly at doors into automation and administrative wings. The raised floor serves as a plenum for conditioned air supplied by new floor mounted air handling units and provides a place for routing VSCS and RCE signal and power cables. The existing concrete walls are paneled to match the HCS area. A suspended ceiling is provided for this area and the remainder of the basement after the M-1 consoles and their cables and trays are removed. New critical, essential, and building service power panels are furnished in this modification for the VSCS and RCE Systems. A halon fire suppression system is installed in the basement for protection of VSCS and RCE equipment. The remainder of the basement is not required for ISSS operations and is rehabilitated by a task identified as Modification Package No. 2 at a later date.

71.1.2.3 **Third ARTCC/ISSS Improvement - Control Wing First Floor (Four-Bay Expansion Plus) Modification Package No. 3**. Modification package No. 3 provides a new six-bay ISSS control room and E-Complex Area comprising the first floor area of the host four-bay expansion and three bays of the old control room adjacent to the expansion. The modification completes the unfinished first floor of the host expansion by adding air conditioning equipment in the attic, and a ceiling, lights, raised floor, and power panels. It requires removal of old ceiling, HVAC, power panels, lighting and acoustic wall treatment of existing three-bay area prior to installing new facility systems. The site-specific designs for the new ISSS control room are based on the control wing first floor standard design concept. The first floor, four-bay expansion, is unfinished space, as is the penthouse portion of the addition. A part of the expansion task involves the removal of asbestos in a portion of one bay of the original control wing attic adjacent to the expansion. Prior to the ISSS modifications the E-Complex functions remaining on the four-Bay expansion side of the bridge are relocated to the M1 operations area. A temporary wall is then erected at the edge of the bridge, or vicinity thereof, to accommodate asbestos abatement in existing control bays adjacent to four-bay expansion. After removal/isolation of all the asbestos, the existing temporary wall separating the four-bay expansion from the existing control room is removed.

a. In addition, the air handling system in the attic over the existing bays is replaced and supply and return ducts serving all areas of the new control room are installed. The side walls are furred out to accommodate air ducts and power conduit/panels. An 18-inch high raised floor is installed in the new control room. The raised floor serves as a cooling plenum and a cable chase for the ISSS CC's. A new ceiling with new lighting is provided for the existing and new bays of the ISSS control room. The old wall treatment in the existing ISSS bays is replaced with new acoustic materials and the same new acoustic material is applied to the unfinished four-bay area. New critical, essential, and building service power panels and distribution are provided in the new ISSS control room.

b. When ISSS equipment installation is complete the temporary wall in the vicinity of the bridge is removed so that E-Complex functions are accessible to both M-1 and ISSS operations.

71.1.2.4 Fourth ARTCC/ISSS Improvement - Expansion of the ARTCC Power Systems. This modification of ARTCC critical, standby, and essential power systems provide the capacity to meet increases in ARTCC/ISSS and subsequently ARTCC/ACF power loads.

a. The critical power load is projected to grow from the present 400 to 500 KVA level to almost 1200 KVA when ISSS has met IOC requirements. At that time, all existing equipment and all new ISSS equipment will be operating at the same time. The large increase in power is due to the introduction of the large number of ISSS CC's.

b. A new Uninterruptible Power System (UPS), also referred to as EUPS, consisting of new supply and output buses, switch-gear, four new 750 KVA UPS units, new critical power centers with transformers and distribution panels are installed next to existing operating critical power components to provide a smooth transition from the existing to the final system.

c. An expansion to the new 750 KVA UPS units are installed in the service building. This results in a critical power system comprised of four each 750 KVA UPS units for the initial phase to meet ISSS load requirements.

d. The building addition is required for housing new 750 KVA UPOS units, new critical and standby power switch-gear and, initially, two new diesel generators for serving increased critical/essential loads. This results in a critical power system having four each 750 KVA UPS units and a standby power system with four existing 550 KW and two new 675 KW engine generators. The NADIN UPS will be removed with loads transferred to the new UPS unit.

e. The new 750 KVA UPS battery units are phased in and commissioned one at a time, so that the minimum single redundancy requirements are retained at all times. One of the new 750 KVA UPS units is used to test the ISSS on an isolated bus. The other three UPS units are used to serve existing critical loads.

f. The engine generators and switch-gear are also installed without disturbing the operational system. This provides installation of the new critical power distribution system without disturbing the existing system.

g. Before TAAS/ACCC implementation one additional 750 KVA UPS and Engine Generator are installed to serve additional ARTCC loads.

71.1.3 Administrative Facilities Impact. ARTCC administrative facilities are defined here as the Administrative Wing, with its office space, locker rooms, supply support, cafeteria, restrooms, libraries, and storage and the exterior parking areas. Efforts are under way to identify and to provide adequate space to meet the continuing AT and AF administrative requirements as well as those of various contractors. Preliminary space requirements are identified and documented in the June 1987 ARTCC/ACF Space Requirements Study (ATC-87-1066). The ATC manpower forecasts along with those of AF are essential to completing a useful impact analysis and producing recommendations to meet space shortfalls.
Refer to the following two documents: the ACF Operational Architecture dated October 26, 1988, and the ARTCC Resource Requirements Plan.

71.1.4 Administrative Wing Requirements. The NAS Transition Plan (paragraph 5.1) cites facility planning criteria, guidelines and assumptions for developing the strategy and approach for ARTCC transition through ISSS to ACF. The first priority in allocating ARTCC space is to the operational and training requirements; the second is to technical requirements; and lastly, to administrative and support functions.

a. Operational, training, and technical space shortfalls are absorbed through reductions in administrative space, and temporary displacement of administrative functions outside the facility (e.g., in trailers) per Order 4420.4, Space Acquisition, permitting flexibility in space planning. It can be used to limit and control requirements until there is an expansion of administrative spaces.

b. Existing space in the ARTCC is used where available. Space outside the building, i.e., trailers or off-site facilities, are means of satisfying space requirements.

71.1.4.1 Administrative Support Areas. Listed below in this paragraph are administrative support areas assumed to be impacted by the transition. If additional manpower requirements are identified for ISSS timeframe, this section will be updated to reflect actual impact.

a. Parking.

b. Office space.

c. Locker room.

d. Rest room.

e. Storage.

f. Supply support.

g. Security.

h. Libraries.

71.1.4.2 Office Space. A project has been approved that, when implemented, provides a three-story construction for 24,000 to 25,000 square feet of additional administrative space. This space meets the projected shortfall of 21,000 square feet during ISSS and 24,000 to 25,000 square feet at ACF or end state. This additional space alleviates the shortfalls that are projected for locker room, rest rooms, storage, supply support, libraries, and security functions.

71.1.5 Temporary Facility Requirements. The AAS contractor requires some onsite space for ISSS installation. This and other temporary requirements are accommodated as resources permit. In 1988/1989 some early funds were made available to the regions. These funds permit the ARTCC's to acquire up to 2400 SF of temporary administrative space by construction, lease, or rent at a cost not to exceed $250,000. If the ARTCC elects to build a temporary structure, it is sited in front of or in the vicinity of the radar microwave link (RML) towers.

71.1.5.1 Temporary Personnel Housing. In the existing ARTCC, trailers are used by contractor to house personnel not housed in the ARTCC. Trailers are located in rear parking areas or off-center as the contractor deems necessary. If trailers are located on site, power, water, and sewage connections are furnished by FAA as a part of the $250,000 allocation discussed paragraph 71.1.5.

71.1.5.2 Staging Area. The ARTCC designates a portion of the parking lot as an equipment and fit-up staging area for the AAS contractor and sub-contractors. Staging areas within the ARTCC for the AAS contractor are limited to the equipment installation areas. The AAS contractor controls the flow of AAS equipment to the ARTCC to minimize the stress imposed on the parking and staging areas, the loading dock, and access to the ARTCC. The AAS contractor provides a mobile work unit, a 40 by 10 foot trailer, for the use of his/her fit-up subcontractor. The trailer is placed within the site designated staging area. Temporary hook-ups to 208/120 VAC, 100 Amp service power and telephone connection are required at the trailer as discussed in paragraph 71.1.5.1.

71.2 Requirements. The Implementation Branch, AAP-240, has the primary responsibility for providing the formal definition of the site preparation requirements for ISSS. Paragraph 32 defines the ISSS architectural, mechanical, and electrical requirements for site preparation.

71.3 Planning. The planning for the ISSS site preparation covers several documents, several activities, and the responsibilities of several organizations. There is one site survey for the purpose of facility planning which is referred to as the initial site survey, and there are two different ISSS site surveys. The following paragraphs describe each of the site surveys.

71.3.1 Initial Site Survey. The Facilities Integration Division, ANS-200, with the support of the SEI contractor, conducts the AAS facility modernization initial site surveys at each ARTCC. The survey provides the data for the site preparation design documents for all AAS segments, PAMRI, TAAS, and ACCC as well as for ISSS. The initial site survey task consists of the following items for which ANS-200 is responsible:

a. Providing SEI contractor/R.M. Parsons with the current drawings of the ARTCC buildings, power systems, and cooling systems.

b. Coordinating site visits by SEI contractor/R.M Parsons.

c. Assisting SEI contractor/R.M. Parsons during site visits.

d. Collecting the data at each ARTCC necessary to produce a site-specific design package for each ARTCC site.

e. Producing a site-specific design package for each ARTCC site that meets the space, power, cooling, and security requirements for each of the four AAS segments (PAMRI, ISSS, TAAS, and ACCC) at the time of delivery of each of these systems.

f. Coordinating design packages with regional offices, sites, and AAP-240.

g. Reviewing design packages for clarity, accuracy, and design quality.

71.3.2 SAP Site Survey. The Implementation Branch, AAP-240, has the primary responsibility for the site survey that provides input for the SAP. The SAP site survey

provides information on site preparation progress and collects data for the SAP. The AAS prime contractor surveys each ARTCC. The contractor uses the survey data to prepare 20 site-specific ISSS SAP's.[4] Paragraph 57.1.3 describes the SAP. The SAP site survey task consists of the following:

a. Gathering the site-specific information needed in the preparation of each of the 20 site-specific ISSS Site Activation Plans.

b. Reviewing site preparation plans.

c. Identifying potential site preparation problems.

d. Ensuring that the subject areas of the SAP are adequately covered.

e. Providing liaison and coordination among the site, the contractor, and AAP-240.

f. Providing contractor access to site preparation planning documents.

71.3.3 Final Site Survey. The Implementation Branch, AAP-240, has the primary responsibility for verifying the site preparation for the ISSS. The final site survey is described in paragraph 56.3.10. For the first site, the DRR decision for equipment deployment is in this same time period. AAP-240 participates in the DRR process which starts much earlier. Paragraph 70 describes the DRR. The AAS prime contractor performs the final site survey for ISSS at each ARTCC prior to equipment delivery. This survey ensures that the site preparations needed to meet the ISSS requirements for space, power, and cooling as identified in the site-specific design packages and the SAP have been accomplished. The contractor performs separate final site surveys at each site for PAMRI, ISSS, TAAS, and ACCC. The AAS prime contractor prepares a SRRR for each final site survey.[5] The task of the final site surveys consists of the following:

a. Coordinating site visits by AAP-240 and the AAS prime contractor.

b. Providing the AAS prime contractor with the current drawings of the ARTCC buildings, power systems, and cooling systems.

c. Assisting the AAS prime contractor during site visits.

d. Providing explanations of the way that the site preparations meet the ISSS requirements.

e. Identifying any known discrepancies to the AAS prime contractor.

f. Surveying each ARTCC site in terms of space, power, and cooling to determine that site preparation for the ISSS is complete.

g. Writing an SRRR that identifies any discrepancies and provides solutions and workarounds for problems.

h. Validating discrepancies to be identified in the SRRR.

i. Developing and implementing solutions to problems identified during the final site survey.

j. Monitoring and maintaining the status of the progress of the final site surveys.

71.4 Execution. Each regional office has the primary responsibility for preparing its ARTCC sites. The regions may combine the site preparation for ISSS with the site preparation for other CIP projects such as VSCS, PAMRI, TAAS, and ACCC. The task of site preparation includes:

a. Maintaining configuration management of ARTCC space, power capacity, and cooling capacity.

b. Preparing bid packages for site preparation work.

c. Awarding site preparation contracts.

d. Monitoring and maintaining the status of the progress of site preparation work.

e. Providing engineering services for change order submittal, review, site inspections, and tests.

f. Accepting the completed site work from the contractor.

71.5 Provide Site GFP. The contractor uses Government-owned property during the implementation of the ISSS. The contractor uses space for offices and equipment storage. The contractor uses GFP computer time during testing and integration. The request for proposal[6] does not define this type of GFP for operational sites.[7] Each site coordinates site GFP with the AAS contractor. AAP-10 provides funds for temporary office space for contractors and FAA personnel. These funds are used by the regions and sites to meet office space needs through trailer rental or purchase, temporary building

construction, or other means as deemed appropriate by the regions and sites.

71.6 Security Access. The AAS contractor is responsible for and arranges the badging of his/her own and his/her subcontractor personnel through the ARTCC security office. The contractor onsite personnel are provided a security briefing covering rules of access to the ARTCC by the ARTCC security office.

72. DELIVERY. The System Development Branch, AAP-210, has the primary responsibility for equipment delivery to the site. The Implementation Branch, AAP-240, has the primary responsibility for the project at the operational sites starting after equipment delivery to the site. Prior to equipment delivery, the AAS contractor briefs the site and region personnel on the plans for equipment delivery and installation. The basis for this briefing is the Government-approved SAP (refer to paragraph 57.1.3). Delivery schedules are discussed in chapter 4 and figure 41-3 shows the delivery, acceptance, and operational dates:[8] The contractor plans for actual equipment delivery to occur the weekend prior to the contract delivery date in most cases.

73. INSTALLATION. The Implementation Branch, AAP-240, has the primary responsibility for the installation of the ISSS and AAP-400 has the primary responsibility for the installation of the VCE, VSCS in the ISSS except actual physical installation of the boxes in the CC's. The VSCS contractor tasks and responsibilities are defined in paragraph 42.6.
Installation of the ISSS is the process of:

a. Moving the hardware from the receiving dock or staging area to its designated place of use.

b. Installing cables. This task includes the placing of cables for both the ISSS and the VSCS in cable trays and under raised floors.

c. Assembling the ISSS equipment into a usable configuration as specified in the AAS contractor drawings and procedures. The ISSS CC components are installed into the CC frame on-site.

d. Showing that the equipment meets the requirements of the AAS System Level Specification.

The ISSS contractor provides the detailed installation plan in the SAP. Paragraph 57.1.3 describes the SAP. The contractor gathers the information for the SAP during the SAP site survey. Paragraph 71.3.2 describes the SAP site survey.

74.-79. RESERVED.

CHAPTER 8. VERIFICATION

80. GENERAL VERIFICATION ASPECTS. The PIP divides the verification of the ISSS into three sections according to the test and verification activity location. Figure 80-1 shows these areas and the types of testing conducted at each test location. The identified paragraphs provide additional information.

Par #	Test Locat'n	Cntratr Invlvmt	Test Types
81.1.1		Conduct	PAT&E
.1.2		Conduct	Factory Partial System Test
.1.3	Factory	Conduct	Factory Full System Test
.1.4		Conduct	First Article Test
.1.5		Conduct	Factory System Qualification Test
82.1.1		Conduct	Development Test & Evaluation
.1.2	FAA	Conduct	System Test
.1.3	Tech.	Conduct	System Acceptance
.2.1	Center	Support	NAS Integration Test and Evaluation
.2.2		Support	System Evaluation Tests
.2.3		Support	Operational Evaluation Tests
.2.4		Support	System Shakedown
83.1.1		Conduct	Installation and Integration
.1.2		Conduct	Site System Test
.1.3		Conduct	Site Acceptance Test
.2	Sites	Conduct	CAI
.3		EngSupt	FAA Integration Testing
.4		EngSupt	Certification
.5		EngSupt	IOC
.6		EngSupt	System Shakedown
.7		EngSupt	JAI

Test Location Matrix
Fig. 80-1

Note: The contractor involvement column of figure 80-1 is interpreted as follows:

a. Conduct - The contractor develops and conducts the indicated test activities.[1]

b. Support - The contractor supplies all resources to the extent specified in the contract to assist the FAA as required in the conduct of the indicated tests.[2]

c. Engineering Support - Contractor provided to the extent specified in the contract.[3]

Testing proceeds from the contractor's factory to the FAA Technical Center to the site. The DRR falls between FAA Technical Center testing and site testing. The DRR is the process of determination, by a management board and the NAS Program Director using an established check-list, that the ISSS is ready for first operational site delivery. Paragraph 70 provides a description of the DRR process. Major testing responsibilities of the contractor and the Government in the area of testing are:

a. The contractor is responsible for:

(1) The final system and the quality assurance procedures used.

(2) Assuring subcontractor compliance with prime contractor-developed and Government-approved test plans.

b. The Government is responsible for:

(1) Monitoring the overall quality assurance program for effective implementation and operation.

(2) Reviewing and approving all contractor supplied quality assurance documentation, including the MTP, other test plans, test descriptions, test procedures, scenario data, and test data collection procedures.

(3) Overseeing the operation and maintenance of Government-furnished property.

(4) Providing representatives to observe tests requiring Government witnesses.

(5) Providing Government-supplied scenario data for test and evaluation.

(6) Inspecting subcontracted goods and services at the subcontractor's facilities.

(7) Attending the test preparation reviews and post test briefings.[4]

(8) The Government's acquisition and material organization monitors and approves contractor test activities.

81. FACTORY VERIFICATION. Prior to Government authorization of shipment of ISSS equipment to a Government facility, the contractor conducts testing and verification at the contractor's facility. *"The contractor is encouraged to formally request participation of FAA operational personnel ... in test activities where such participation will be beneficial to the Government in its evaluation of system performance."* [5]

81.1 Contractor Factory Testing. Factory tests are conducted using Government-approved test plans and procedures. The contractor analyzes all test results and test data and prepares test reports. The contractor maintains logs of formal test. The logs are made available to the Government within 2 days of test completion.[6] A

government witness monitors all appropriate factory testing. Subparagraphs 81.1.1 through 81.1.5 discuss the categories of contractor conducted, formal factory testing for the ISSS. Figure 81-1 shows what the contractor actually does in each test area.

Para #	Test Category	Major Test Characteristic
.1.1	PAT&E	Test noncommercially available hardware manufactured for AAS
.1.2	Fact. Partial System Test	Uses only part of the ISSS equipment configuration
.1.3	Factory Full System Test	Uses all ISSS equipment
.1.4	First Article Testing(FAT)	Testing of the first items of a type produced
.1.5	Factory Syst. Qualification Test (FSQT)	Completed prior to shipment of ISSS to the FAA Technical Center

Factory Testing Summary Chart
Fig. 81-1

81.1.1 Production Acceptance Tests and Evaluations. The contractor plans, develops, and conducts production acceptance test and evaluation (PAT&E) for articles not commercially available (hardware/firmware/software) manufactured specifically for the AAS and delivered to the FAA. PAT&E complies with:[7]

a. FAA-STD-016, Quality Control System Requirements.[8]

b. The FAA approved Quality Control System Plan supplied by the AAS prime contractor.[9]

81.1.2 Factory Partial System Test. The contractor defines, develops, and conducts factory tests using a partial ISSS configuration. These tests use a subset of the full factory tests.[10]

81.1.3 Factory Full System Test. The contractor develops and conducts factory full system testing for the ISSS using a complete ISSS configuration of hardware and software. Factory full system testing investigates 19 major areas described in the subparagraphs identified in figure 81-2.

81.1.3.1 Human Factors Engineering, Computer-Human Interface (CHI). The contractor verifies conformance with the human factors requirements on the system including physical and functional requirements that pertain to the various sector suite configurations. These range from a single CC with a main display, auxiliary display and data entry devices to a sector suite comprising up to four CC's.[11]

Par. Number	Major Test Area
81.1.3.1	Human Engineering and MMI
81.1.3.2	Functional Performance
81.1.3.3	Capacity and Response Time
81.1.3.4	Host Baseline
81.1.3.5	Hardware
81.1.3.6	Software
81.1.3.7	H/W S/W integration
81.1.3.8	Modified GFP
81.1.3.9	LCN
81.1.3.10	Failure and Recovery Tests
81.1.3.11	Transition
81.1.3.12	Host Operational Monitor
81.1.3.13	Interface
81.1.3.14	Maintenance
81.1.3.15	Support Functions
81.1.3.16	Security
81.1.3.17	On-line Certification
81.1.3.18	Manual Reconfiguration
81.1.3.19	VSCS

Full Factory Test Major Areas
Fig. 81-2

81.1.3.1.1 Hardware Design Characteristics. Contractor testing evaluates design characteristics including equipment layout, ground workspace, maintenance access to internal components, and readability of displays under a range of lighting conditions. The contractor verifies the equirements for the reach and view capability of the CC for a right and left handed 5th percentile female and a 95th percentile male operating from a normal operating position and verify ease of maintenance.[12] The following items are checked:

a. Frame design, finish, and color.

b. Movable shelf and display head design and force limits required for adjustment.

c. Display devices - mounting, angle, height, exterior surface cleanability and glare/reflection reduction capacity.

d. Data entry devices - mounting, size, labels, color(s), location, and mobility.

e. VSCS, VDM and VIK - mounting, location, and CHI/CC compatibility.

f. Loudspeakers and controls - mounting and location.

g. Headphone jack modules and controls - mounting and location.

h. Foot activated switch - mounting and location.

i. Headset assembly characteristics.

j. Weight and dimension limitations of components.

k. Maintenance access - console and component replacement capability.

l. Equipment layout and configurability.

m. Cables, connectors, and power switches - types and locations.

81.1.3.1.2 Physical CHI Design Characteristics. Human engineering and CHI testing verifies the physical characteristics of the AAS equipment used in the ISSS for each user position. These characteristics include:[13]

a. Noise levels of operating equipment.

b. Environmental, health, and safety factors.

c. Display clarity, chromaticity, flicker, and parallax.

d. Uniformity of display brightness within all brightness control groups.

e. Display capacity, legibility, and readability of the required minimum simultaneous display load of alphanumerics, symbols, and graphics.

f. Selectability of display character sizes.

g. Display capacity, layout, legibility and readability, of the always required and necessary logical displays for each user position including maintenance and support facilities.

h. Consistency and standardization in CHI coding design for use of shapes, symbols, colors, shading, and emphasis.

i. Audible alarm performance and control.

81.1.3.1.3 Functional CHI Design Characteristics. Human engineering and CHI testing verifies the functional characteristics of the AAS equipment used in the ISSS for each user position. These characteristics include:[14]

a. Data entry command language CHI design and formats for all the messages that can be entered into ISSS from each data entry device.

b. Display formats, feedback, and response times to data entry device messages, including error responses.

c. Efficiency of CHI data entry through use of reduced syntax, implied commands, hard/soft/programmable function keys, minimization of interdevice transitions, uses of page/scroll/jump capabilities and uses of quick access menus, tables, and lists.

d. Data entry from adjacent CC's.

81.1.3.1.4 Multiposition Sector Suites CHI. Human engineering and CHI testing verifies all possible combinations of controller positions at sector suites consisting of one to four CC's in the ISSS. These combinations include:[15]

a. One-person operation using one to three CC's.

b. Two-person operation using two to four CC's.

c. Three-person operation using three to four CC's.

All above configurations are tested but it is currently anticipated that only two and three CC sector suites will be used operationally in the ISSS.

81.1.3.2 Functional Performance. The contractor tests the functional performance of the data entry devices for the sector suites in the ISSS in the following areas:[16]

a. Displayed data.

b. Data entry functions.

c. En route control position.

d. Data entry and display equipment.[17]

81.1.3.3 Capacity and Response Time. The contractor tests the capacities and response times for:

a. System configurations.[18]

b. Workload input message rates.[19]

c. Workload output message rates.[20]

The test uses a Government-furnished Host performance measurement tool.[21]

81.1.3.4 Host Baseline. The factory Host baseline tests establish a functional performance baseline. ISSS performance is compared against the baseline. The tests verify that changes made to Host software do not degrade Host performance.[22]

81.1.3.5 **Hardware**. Tests are conducted on all hardware configuration items (CI). Modified commercially available hardware is treated as noncommercially available hardware.[23]

a. Noncommercially available hardware tests are conducted to verify compliance of each CI to the requirements in the development specifications. Electromagnetic radiation, environmental conditions, and safety are tested.

b. Commercially available hardware tests are conducted to verify compliance with performance requirements contained in the AAS system-level specification.

c. Pre-production reliability qualification tests are conducted to verify that the equipment has the potential of meeting the allocated reliability requirements under specified environmental conditions.

81.1.3.6 **Software**. Tests are conducted to verify that all requirements that have been allocated to the software are in compliance. Tests are conducted for the following categories:[24]

a. Modified/augmented commercially available software.

b. Commercially available software.

c. Hardware software integration.

d. Modified GFP.

e. Modified HCS software.

f. Modified AAS equipment.

g. Regression tests and retests.

h. Prerequisite CI and computer software CI (CSCI) tests.

i. Data recording and analysis.

j. Updated software tests.

k. LCN tests.

l. ISSS system tests.

(1) Human engineering and man-machine interface.

(2) Functional performance tests.

(3) Capacity and response tests.

(4) HCS baseline tests.

(5) Failure/recovery tests.

(6) Transition tests.

(7) Host operational monitor tests.

(8) DARC tests.

(9) Interface tests.

(10) Maintenance tests.

(11) Support functions tests.

(12) Security tests.

(13) On-line certification tests.

(14) Site simulation tests.

(15) Manual reconfiguration tests.

(16) Special tests.

m. Qualification and acceptance tests.

(1) Factory system qualification tests.

(2) FAA Technical Center acceptance tests.

(3) Site system tests.

(4) Site acceptance tests.

81.1.3.7 **Hardware and Software Integration**. Tests are conducted to verify that the hardware and the software have been integrated correctly. These tests verify the functional capabilities and the interface capabilities of the CI's and CSCI's.[25]

81.1.3.8 **Modified Government Furnished Property**. Tests are conducted to verify that GFP modifications have not degraded the ATC operational system.[26]

81.1.3.9 **Local Communications Network**. Tests are conducted on all system elements necessary for local communications to verify that they meet the ISSS requirements.[27]

81.1.3.10 **Failure and Recovery**. The contractor verifies the following requirements for failure detection and failure recovery for ISSS using sector configurations of one, two, three, and four CC's.

a. The ISSS automatically detects failures in any system resources and triggers automatic reconfiguration.[28]

b. Where redundant resources are provided by the ISSS, the ISSS will automatically reconfigure available resources to replace resources lost due to equipment failure.[29]

c. No single failure of the LCN causes network failure. Network error status is passed to the M&C console.[30]

d. The system meets the requirements for autonomous operation:[31]

(1) ATC operations can be conducted independent from the Host.

(2) Continued availability of flight data.

(3) DARC generated situation display. (Simulated DARC data is used in the full factory test.)

(4) Recording of ISSS data. The ISSS records system events, associated system state and performance data, workload of system components, and the use of system resources.[32]

(5) Manual maintenance of data.

(6) Sector-to-sector communications of flight data.

(7) Host restart based on ISSS data.

e. The ISSS provides for sustained operations during and after all modes of startup and startover of the Host.[33]

f. The ISSS automatically performs real-time periodic tests on software and hardware. These tests verify that no failure has occurred. Any out-of-tolerance condition triggers automatic reconfiguration.[34]

g. An M&C position provides for centralized reporting of ISSS status, performance, and manual entry of commands.[35]

81.1.3.11 **Transition**. The contractor verifies that the ISSS provides the following features during the period of transition from the PVD to the ISSS CC's: (Note that the term PVD is used here to distinguish between the two systems; the factory does not have PVD consoles.)

a. The host system will have the capability to provide support for a mixed environment of PVD's and CC's in the ISSS. This will support a sector-by-sector transition concept during the system shakedown period at the ARTCC's.

b. All capabilities of the Host/PVD system are retained in the ISSS.[36]

c. The new ISSS PVD and ISSS transition software will provide for ATC from a sector or sectors in either control room, but each individual sector will be controlled in only one location.

d. The ISSS provides the option to inhibit inputs from nonoperational equipment,[37] although output data will be displayed on all positions, regardless of the sector control status. This will enable position monitoring from the sector (in the other control room, ISSS or PVD) that does not actually have control responsibility for the sector.

e. The ISSS provides system-level testing without interfering with the PVD system.[38]

f. The ISSS provides the proper routing and content of flight and radar data.[39]

81.1.3.12 **Host Operational Monitor**. The contractor verifies the correct operation of any changes to the Government-provided Host operational monitor.[40]

81.1.3.13 **Interface**. The contractor verifies the external interfaces of the ISSS in accordance with the ICDs and the IRD's.[41]

81.1.3.14 **Maintenance**. The contractor verifies that the ISSS logistics requirements are met.[42]

81.1.3.15 **Support Functions**. The contractor verifies that the requirements of the following support functions are met:

a. Training.[43]

b. Software design support tools.[44]

c. System performance model.[45]

d. System data reduction and analysis.[46]

81.1.3.16 Security. The contractor verifies that all security requirements are met.[47]

81.1.3.17 On-line Certification. The contractor verifies that the on-line certification at the system level can be achieved without interference to operational use of the ISSS.[48]

81.1.3.18 Manual Reconfiguration. The contractor verifies that the ISSS responds to operator requests for manual reconfiguration. These reconfiguration do not degrade ATC operations. The test includes a representative number of Host reconfiguration.[49]

81.1.3.19 VSCS. The contractor demonstrates user compatibility and suitability of the Government supplied VSCS hardware as installed in the CC.[50]

81.1.4 First Article Test. The contractor develops and conducts first article testing (FAT) for the first production items manufactured specifically for the AAS. Testing complies with:[51]

a. FAA-STD-016, Quality Control System Requirements.

b. The Quality Control System Plan.

81.1.5 Factory System Qualification. The contractor combines hardware articles and software items to build the ISSS. After completing all ISSS tests and other tests conducted at the factory, the contractor conducts the Factory System Qualification Test (FSQT). The FSQT is the final factory test prior to installing the ISSS at the FAA Technical Center.[52] The FSQT begins from a cold start and terminates with a planned shutdown. During the test, the support Host runs NAS in the stand-by mode and two operational data reduction tasks. The test uses a continuous scenario. During the test, four operational sectors are assigned to the on-line sector suites. The FSQT divides testing into periods 3/4 of an hour to 2 hours in length. The FSQT provides the option for each segment to run as a stand-alone test. Input data include simulated radar data and interfacility data.[53] The tests have the characteristics defined in the following subparagraphs:[54]

81.1.5.1 Sector Suite Arrangement. The FSQT calls for arrangement of the sector suites in one-person, two-person, and three-person configurations representing all operational positions:

a. ATC.

b. Supervisory.

c. Maintenance.

d. Training.

e. Traffic Management Unit.[55]

81.1.5.2 Live Entry. Test participants make concurrent, manual entries from all on-line CC positions and all of their entry devices. The manual entries include examples of all message types and categories that are applicable for a given position. Ten percent of the manual entries contain intentionally input keystroke errors. The manual entries are made throughout the test. Live entry testing exercises all display management capabilities of the CC.

81.1.5.3 Reconfiguration. The FSQT calls for all possible configurations of CC's. Five resectorizations are performed.

81.1.5.4 DYSIM. The FSQT exercises the dynamic simulation and the detached console training capabilities for 1 hour in parallel with other testing.

81.1.5.5 Display Recording and Playback System. The FSQT calls for use of display recording and playback. All options are exercised. In addition to the record and playback function on the DRPS, SAR data is collected on the primary Host. After 30 minutes, display recording is momentarily stopped, then restarted. While display recording continues, the FSQT calls for playback of the first 30 minutes of recording. Then the second period of display recording is played back. All CC's are recorded at the same time.

81.1.5.6 On-line Certification. Certification and diagnostics are performed during the FSQT.

81.1.5.7 Failure and Recovery. The FSQT demonstrates failure and recovery processing. Autonomous mode capabilities are demonstrated. Fault insertion is not performed during the test. Manual reconfiguration and the removal and replacement of equipment is tested. For example, one CC is removed from service. Diagnostic programs are run against the CC. Then the CC is returned to service.

81.1.5.8 Resource Utilization. The ISSS capability for continuously monitoring and recording system resource utilization is used throughout the test. The following types of utilization are tested:

a. Processor.

b. Channel.

c. Memory.

d. Software.

e. Use of processors by software.

f. Interrupts in terms of number and frequency.

81.2 FAA Activities During Factory Testing. During the factory testing period the ISSS Program Branch, AAP-200, has the primary responsibility for the ISSS Program and the Advanced Automation System Branch, ACN-130, has the primary responsibility for formal ISSS factory testing. The factory testing activities are managed by the contractor and are reviewed by the Government.[56] The major responsibility of each of these organizational elements is as follows:

a. The contractor provides the Government an opportunity to witness all informal tests.[57]

b. The Government witnesses all formal tests.[58]

c. FAA operational personnel participate in contractor testing as requested.[59]

82. FAA TECHNICAL CENTER VERIFICATION. ISSS verification at the FAA Technical Center progresses through multiple phases over a period of 19 months. Verification begins with contractor developed and conducted testing followed by FAA developed and conducted testing using experienced maintenance, software support, and controller personnel. The following paragraphs discuss each of the test phases at the FAA Technical Center.

82.1 Installation and Integration. The contractor develops and conducts an installation and integration (I&I) test at the FAA Technical Center using a complete set of hardware and software for ISSS. During the I&I testing, the contractor performs the following:

a. The AAS contractor conducts checkout tests in order to verify that the newly installed hardware, software, and firmware for the ISSS segment is:[60]

(1) Functioning correctly.

(2) Ready to start interface and integration testing with the Government-furnished equipment at the FAA Technical Center.

b. After successful completion of installation and checkout, the contractor verifies the interface of the ISSS equipment to the Government-furnished equipment in accordance with the ICD's and IRD's. These tests verify that the ISSS is integrated as specified in paragraph 20.10 of the System Level Specification. Prior to the connection of a transition switch to Government property, the contractor provides a verification of the compatibility between the switch and the Government property. This verification includes both hardware and software. The contractor verifies that the Government property continues to function as it functioned prior to the connection. Tests are performed to verify that the functional and performance characteristics of the software are not degraded since testing at the previous site.[61]

c. The contractor verifies that the electromagnetic radiation emission and susceptibility requirements of the ISSS are met.[62]

82.1.1 Development Test and Evaluation (DT&E). The Advanced Automation Systems Branch, ACN-130, has prime responsibility for the DT&E testing. The contractor develops and conducts the test and evaluation program at the FAA Technical Center for the ISSS in accordance to FAA approved test plans and procedures. FAA witnesses/monitors all DT&E formal testing and participates in test data analysis. Decisions relative to retest and regression testing are to be made by the FAA based on findings during formal test conduct, data analysis, or software modifications made during the course of testing.

82.1.2 System Test. The contractor conducts a system test at the FAA Technical Center. The system test is divided into 17 major test areas. Formal tests do not begin until all the hardware CI's and software CSCI's that comprise a particular configuration have been successfully tested and verified.[63] During each test run in preparation for a formal test, all pertinent displays, printers, and other observable items are verified for accuracy, and the results are recorded. The existing NAS data recording and analysis capabilities are also used. Post test data analysis verifies that any message input and any processing conducted during the test gives the expected output and/or

response.[64] Figure 82-1 summarizes these test areas. The following subparagraphs provide a brief description of each area.

Paragraph Number	Test Area
82.1.2.1	Human Engineering and MMI
82.1.2.2	Functional Performance
82.1.2.3	Interfaces
82.1.2.4	Maintenance
82.1.2.5	Support Functions
82.1.2.6	Security
82.1.2.7	On-line Certification
82.1.2.8	Failure and Recovery
82.1.2.9	Transition
82.1.2.10	Site Simulation
82.1.2.11	Capacity and Response
82.1.2.12	Host Baseline
82.1.2.13	Enhan. Direct Access Radar Channel
82.1.2.14	Manual Reconfiguration
82.1.2.15	VSCS
82.1.2.16	Regression and Retesting
82.1.2.17	Updated Software

FAA Technical Center System Test Matrix
Fig. 82-1

82.1.2.1 Human Engineering and VHI. The majority of the human engineering and CHI tests are conducted at the factory (paragraph 81.1.3.1). The human engineering and CHI tests that are conducted at the FAA Technical Center are conducted as defined in the following subparagraphs.[65]

82.1.2.1.1 Situation Display. Human engineering and CHI system tests are conducted to verify that the Host and/or DARC display satisfies the following on format and content.[66]

a. Logical Display. Display the situation display as a logical display that presents the plan view of a geographic area of concern. It contains real time positions and full data blocks on targets within that geographic area.[67]

b. Geographic Area of Concern. Display controller selectable geographic area with definable parameters.[68]

c. Geographic Map Data. Display a geographic map data set in adaptation that is categorized for selection purposes as in the existing NAS Stage A system.[69]

d. Target and Track Data and Symbology. Display of selected information for the targets and tracks in the geographic area of concern.[70]

e. Geographic Tagging. Display controller entered lines, arcs, circles or polygons that are defined by geographic points or an entered fix including latitude and longitude designations.[71]

f. Traffic Management Coordinator Display. Display several metering lists of information, each list containing sub-lists as necessary.[72]

g. Traffic Management Flight Data Display. Display information for certain aircraft that have filed a flight plan. Appropriate tools are provided to manage this display.[73]

h. Controller Notepad Display. Display a personal electronic scratch pad for each position, consisting of controller-entered free form data.[74]

i. Suppressed Display List Display.[75] Display a list of currently suppressed logical displays.

j. Flight Data Monitor Display.[76] Display referrals and data on messages that are unable to be processed.

k. Track Vector.[77] Display controller selectable track vectors of distinguishable types.

l. Search Radar Strobe.[78] Display controller selectable search radar strobe lines.

m. Beacon Radar Strobe.[79] Display controller selectable beacon radar strobe lines.

n. Graphic Weather From ATC Radars.[80] Display at controller's option graphic weather from ATC radars.

o. Conflict Resolution and MSAW Advisories. Conflict alert and MSAW Advisories will be displayed periodically until the conflict alert has been resolved.[81]

p. Route Display. Display at the controller option the planned route of any flight that flight plan data is available.[82]

q. Longitudinal Scale. Display at the controller option a controller selected number of miles (0-20) as the range setting of the display.[83]

r. Aircraft Halo. Display at the controller option an aircraft circle (halo) which will move with each update of the position symbol.[84]

s. Emergency Airport Locator Display. Display at the controller option the location indicator for emergency airports.[85]

82.1.2.1.2 Controller and Supervisory Positions. Human engineering and man-machine interface system tests are conducted to verify that the CC and auxiliary display satisfy the following position requirements not previously tested.[86] There are several types of operational positions within a given facility. Each position, dependent upon its type, has a different set of logical displays available to that position as well as a different set of input messages that are legal from that position.[87] The following is a list of the operational position types.

a. En route Controller Position. One-person, two-person, and three-person operations, with one additional person standing.[88]

(1) One-person operation has the following displays present at all times.

(a) Situation display.

(b) Alert and resolution display.

(c) Message composition and response display.

(d) Flight data display.

(e) Static information display.

(2) Two-person and three-person operation have the following displays present at all times:

(a) To the R-Controller:

1 Situation display.

2 Alert and resolution display.

3 Message composition and response display.

4 Static information display.

(b) To the D-Controller:

1 Alert and resolution display.

2 Message composition and response display.

3 Flight data display.

b. Traffic Management Position. One-person operation.[89]

c. Area Manager. One-person operation.[90]

d. Area Supervisor. One-person operation.[91]

e. Flight Data Monitor Position. One-person and/or with up to one support person operation.[92]

82.1.2.2 Functional Performance. Tests are conducted at the FAA Technical Center to verify the correct operation and performance of the system functions pertaining to ATC. These tests are conducted using functional performance scenarios designed to exercise all ATC functions for the ISSS. These tests are conducted with the operational software executing an operationally realistic background scenario. The background scenario includes an ATC workload that continually exercises NAS functions (e.g., conflict alert, MSAW) and non-radar message types (e.g., interfacility, weather).[93] These tests are summarized in the following subparagraphs:

82.1.2.2.1 Recorded Live Radar Tests. The tests defined in paragraph 82.1.2.2 are conducted using recorded live radar data as a source of radar input. Scripts of manual inputs and flight plan data (as needed) corresponding to the recorded live radar data is used in conjunction with the recordings.[94] In addition, displays generated from DARC provided data are tested.[95] These tests verify the following functional areas.

a. Data display functions.[96]

b. Data entry functions.[97]

c. En route control positions.[98]

d. Display recording and playback.[99]

82.1.2.2.2 Live Radar Tests. Additional FAA Technical Center functional performance tests include tests using live radar as input. This tests the capability of the ISSS to:[100]

a. Process real-time input data from actual radar sites.

b. Track actual aircraft.

c. Transmit/receive real-time interfacility messages.

d. Transmit/receive real-time data on other interfaces.

e. Process manual inputs from and outputs to actual hardware devices.

Display Recording and Playback capabilities are tested throughout the tests. The ISSS is interfaced with a GFP HCS (representing the current ATC system) operating as an adjacent ARTCC.

82.1.2.2.3 Failure/Recovery Tests. These tests verify that the requirements for the failure detection/failure recovery are met. This testing addresses all interfaces. This test verifies the correct operation in response to the failure and subsequent recovery of major elements. This test verifies the requirements for autonomous mode operations.[101] These tests are in addition to the tests of paragraph 82.1.2.8.

82.1.2.2.4 Transition Tests. FAA Technical Center functional transition testing verifies the ability of the ISSS and new modified Host software to support the five modes of operation that are required during the transition period at the ARTCC's. The operational modes are selected from a supervisory position and are as follows:

a. PVD mode only with no ISSS hardware connected.

b. PVD only with ISSS hardware connected.

c. PVD's and CC's in dual mode operation.

d. CC's only with PVD display channel equipment connected.

e. CC's only with the PVD display channel equipment disconnected.

These tests are accomplished for both CDC and DCC existing equipment configurations. For more detailed information on the process of operational site transition, please refer to paragraph 83.6.2.

82.1.2.2.5 Special Tests. These tests demonstrate the user compatibility and suitability of GFP items that are interfaced or integrated with the ISSS. The user interface with the VSCS is demonstrated.[102]

82.1.2.3 Interfaces. Interface tests at the FAA Technical Center use the actual interfaces that are available there; if not available, the simulated interface is used. For interfaces not available at the FAA Technical Center, system integration testing is conducted at the site where that interface is first available. Interface tests are in accordance with the associated ICD and IRD.[103]

82.1.2.4 Maintenance. The FAA Technical Center ISSS (SSCC-1) is the focal point for all ISSS software maintenance.[104] These tests are conducted to verify that the ISSS meets the requirements for maintenance. Tests include access and relocation capability. Demonstrations of maintenance types, levels, and activities are conducted.[105]

82.1.2.5 Support Functions. Tests are conducted to verify the following support functions:[106]

a. Training capability.[107]

b. Performance monitoring.[108]

c. Software design support tools.[109]

d. Software design representation.[110]

e. System performance model.[111]

f. System data reduction and analysis capability.[112]

82.1.2.6 Security. Tests are conducted to verify that all information within the system is protected. Unauthorized manipulation is prevented by automatically initiated activities denying service.[113]

82.1.2.7 On-line Certification. These tests are conducted to verify the capability of on-line certification. These tests verify that certification at the system level can be achieved on-line without interference to operational use. The system performs tests to the level required for certification and reports the results to the device at which the command was entered.[114]

82.1.2.8 Failure and Recovery. Tests are conducted to verify that the ISSS meets the requirements for failure detection, reporting (including diagnostic and status reports), and recovery. The tests include fault insertion to verify failure detection, fault isolation, and automatic reconfiguration. The tests address all major elements and include a minimum of five faults for each element. Major elements are defined as the following:

a. Displays.

b. Data entry devices.

c. Processors.

d. Memories.

e. Mass storage devices.

f. Power supplies.

g. LCN interface.

h. LCN.

i. Peripherals.

j. Internal and external interfaces.

All failure/recovery tests are conducted with the operational software executing a background scenario.[115]

82.1.2.9 Transition. Tests are conducted to verify that the ISSS meets the transition requirements to support the sector-by-sector transition scenario. These tests are conducted using an operational background scenario while fully interfaced with the actual available or simulated interfaces.[116]

82.1.2.10 Site Simulation. Site system tests are conducted at the FAA Technical Center simulating the first three scheduled operational sites. The purpose of these tests is to ensure that the ISSS functions correctly and that it is fully compatible and properly interfaced with the other systems and facilities at the operational sites.[117]

82.1.2.11 Capacity and Response. Tests are conducted to verify the ability of the maximum stress ISSS configuration that is to be implemented at the field sites to satisfy the performance characteristics requirements. These tests do not include response times for operational switchover selections and situation display update from DARC. The minimum logical display data capacity and the minimum logical display item data capacity are tested using operationally realistic scenarios.[118]

82.1.2.12 Host Baseline. Tests are conducted to establish a functional performance baseline on the HCS against which ISSS functional performance can be compared.

a. These tests verify that the ISSS/HCS software modifications have not degraded Host functional performance. The tests ensure that the performance of all NAS functions that existed previously are not degraded. These tests include:

(1) Virtual machine control program tests.

(2) Support/maintenance monitor tests.

(3) System build support software tests.

(4) System utility software tests.

(5) Host computer system diagnostic tests.

(6) Maintenance software tests.

(7) Support software tests.

(8) Operational software tests.

b. These tests are conducted using a Host baseline test scenario that is similar to the existing test scenarios used in HCS testing (specified in FAA-AAP-HCSAP-001B) upgraded to include ISSS unique messages, devices, and functions. These tests include the following operational software tests:[119]

(1) Host operational monitor tests.

(2) Functional tests.

(3) Reconfiguration tests.

(4) Failure/recovery tests.

82.1.2.13 Direct Access Radar Channel. Tests are conducted at the FAA Technical Center to verify the capability of each CC, upon user selection, to present the situation display and provide for the entry of input messages when connected to DARC. These tests also verify that the display presented meets all of the situation display requirements.[120]

82.1.2.14 Manual Reconfiguration. Tests are conducted to verify the ability of the ISSS to reconfigure in response to operator requests. These tests also verify that any manual reconfiguration action does not degrade ATC operations. In addition, a representative number of Host element reconfiguration are performed to verify that there is no adverse effect on data received at or sent from the CC's. These tests are conducted while running the background scenario.[121]

82.1.2.15 VSCS. Tests are conducted on the VSCS to demonstrate the user compatibility and suitability with the sector suite. These tests are conducted under the special tests.[122](Refer to paragraph 82.1.2.2.5)

82.1.2.16 Regression and Retesting. Tests are conducted when a change is made to a baseline that has previously been accepted. The purpose is to verify that the

changed configuration continues to satisfy performance and functional requirements.[123]

82.1.2.17 Updated Software. Software that is updated from the version accepted during the FAA Technical Center acceptance tests is subjected to the following pertinent tests:[124]

a. Tests that verify the modification and/or new functions perform correctly.

b. Regression tests.

c. Retests deemed necessary due to the nature of the software change.

82.1.3 System Acceptance. System acceptance tests are conducted at the FAA Technical Center and at the operational ARTCC sites.

82.1.3.1 System Qualification Tests. Tests are conducted after all systems tests have been successfully completed. This is the final test that must be successfully completed prior to acceptance tests of the ISSS at the FAA Technical Center.[125] These tests are discussed in paragraph 81.1.5.

82.1.3.2 FAA Technical Center Acceptance Test. Tests are conducted after all other FAA Technical Center tests have been successfully completed. These tests are conducted using the factory qualification tests as a basis, and adding test cases unique to the FAA Technical Center test configurations.[126]

82.2 Post Acceptance FAA Testing Activities. The FAA conducts a program of OT&E of the ISSS to ensure that the system segment is operationally suitable, effective, and properly integrated with the operational, procedural, and logistical structure of the NAS. The primary objectives of OT&E activities are to evaluate the quality of the ISSS from the FAA's operational perspective. This is accomplished under conditions expected in the field environment. The effort is to ensure proper integration and operational readiness at each site. OT&E consists of various types of tests to evaluate particular operational aspects. The extent of independent FAA testing depends on the degree of related testing by the contractor and operational factors and requirements clearly beyond the scope of contractor testing. This PIP presents an overview of the OT&E. A more detailed discussion is presented in the Operations Plan for the OT&E of the PAMRI and ISSS at the FAA Technical Center.[127] The ISSS OT&E at the FAA Technical Center includes the following:

a. NAS integration test and evaluation.

b. System evaluation tests.

c. Operational evaluation tests.

d. System shakedown tests.

82.2.1 NAS Integration Test and Evaluation. These tests are conducted at the FAA Technical Center to ensure the correct operation of interfaces between the ISSS segment and the other systems of the NAS. NAS integration test and evaluation (NIT&E) includes tests that ensure the integrity of the interfaces across the range of operational conditions expected in the field. Tests areas are included that incorporate conditions beyond the range of those in the contractor's testing. Test use both simulated and live data. Tests use actual external systems available at the FAA Technical Center. Tests are conducted using data that is representative of operational situations.

82.2.2 System Evaluation Tests. System evaluation tests are conducted at the FAA Technical Center after successful completion of the contractor acceptance tests. These tests are conducted to evaluate the readiness of the ISSS for integration with the NAS and transition to the field. These tests evaluate performance in critical areas, test the limits of performance, and provide operational performance benchmarks for site testing. These tests provide for the development and shakedown of both AF and AT operational procedures to be used in operational tests. The system evaluation tests include conditions beyond the range of the contractor testing. System evaluation tests include the following:

a. Facility simulation tests.

b. Failure mode tests (FMT).

c. System effectiveness tests.

d. System stability tests.

e. RMA data collection.

82.2.2.1 Site Simulation Tests. These tests provide for the development of AF/AT operational procedures and an evaluation of system functions under realistic site conditions employing actual site adaptation, procedures, and personnel.

a. Specific objectives of these tests are as follows:

(1) Evaluate procedures and support software involved in the system software and site adaptation build process.

(2) Evaluate operational procedures related to new system functions and devices.

(3) Evaluate ATC functional and operational performance with site adapted software, operating procedures, and test scenarios.

(4) Evaluate site specific elements of the new system design, e.g., adaptation driven display formats, geographic data bases.

(5) Develop site operational integration tests and procedures.

(6) Evaluate site certification requirements and procedures.

b. At least four operational facilities are simulated at the FAA Technical Center. Test methods range from free form testing by site personnel to structured tests using simulated and scripted inputs as well as pilot in the loop tests. ATC test scenarios are defined and developed by ACN-130 with support from site personnel. All tests are conducted with support from field personnel. The field site under test uses controller and support personnel from that site. ATR and ASM use these tests for the development and shakedown of the new ATC and maintenance procedures for use in operational tests. Facility simulation tests are complete when all planned tests for each site have been conducted to the satisfaction of the lead site representative and all identified problems have been documented for review.

82.2.2.2 Failure Mode Tests. These tests evaluate the ability of the ISSS to withstand and respond to fault conditions. These tests are conducted primarily at the FAA Technical Center.

a. The specific objectives are as follows:

(1) Evaluate the fault tolerance of the ISSS across a wide range of failure conditions within hardware and software elements, GFP interfaces, and procedures.

(2) Evaluate system response to failures under stress load conditions.

b. The approach of FMT is to identify failure modes and points of failure other than those addressed in the contractor's testing, and to introduce these failures and evaluate the system response. Tests at the FAA Technical Center are conducted under single failure and multiple failure conditions with nominal and peak processing loads on the system. Tests are complete when it is verified that the system produces the proper response due to the failure mode, procedures (both AT and AF) demonstrate suitable recovery from critical failure conditions, and any weaknesses in fault tolerance and the system design are identified.

82.2.2.3 System Effectiveness Tests. These tests provide an assessment of quality of the system design, a validation of system operational requirements, and a benchmark of system performance for field testing. Emphasis is on new functions where operational experience is limited and in areas deemed critical by the FAA.

a. The basic objectives of these tests are to:

(1) Evaluate system operational requirements and performance in critical design areas.

(2) Measure the limits of functional performance and system capability.

(3) Validate contractor delivered user documentation.

b. Special ATC scenarios, load tests, and simulation drivers are used to measure performance of specific functional elements. Contractor supplied and FAA developed scenarios and drivers are used. Special tests are conducted to respond to critical issues or perceived design weaknesses identified through testing in other areas. System effectiveness testing is complete when all planned and special tests are conducted and performance results are determined to be within operational system limits, or appropriate performance measurements have been made that are consistent with the specific objectives. All problems are documented and reviewed to determine if deficiencies lie in either the system requirements or the system design. Design problems are resolved by the contractor and solutions are verified in testing. Certain system effectiveness tests are repeated if it is determined that contractor changes impact performance results.

82.2.2.4 System Stability Test. A stability test is conducted to verify that the ISSS can operate for an extended period, under load, without failure due to

accumulated errors or inherent instabilities caused by software and/or hardware design problems. These tests are run over an extended period while the system is continuously operated. A basic 24-hour recycling test scenario is used. During the test period the system is monitored, support and maintenance functions are performed, and ATC functions are exercised in a limited mode. The stability test is complete when the ISSS operates throughout the period without unplanned aborts, shows no sign of deterioration due to data management or storage buildup, and performs all functions without performance degradation below defined limits.

82.2.2.5 Reliability Maintainability Acceptability. The RMA tests are primarily for data collection related to system reliability and maintainability. No specific testing is actually accomplished, although the failure mode test process and other testing is primarily intended to help improve RMA growth. All objectives are satisfied during other OT&E testing. Detailed logs of failures and repair times are kept throughout OT&E testing. Examples of evaluations that these data support are:

a. Evaluate reliability trends for the system.

b. Evaluate the maintainability of the system and the adequacy of maintenance documents.

c. Evaluate the quality of maintenance training and procedures.

d. Evaluation of the fault tolerant capabilities built into the system.

82.2.3 Operational Evaluation Test. These tests evaluate the use of system functions, data entry devices, displays, AF and AT operational procedures, training, and documentation involved in ATC, maintenance, and support operations. Tests are conducted in a building block fashion. Tests begin with an evaluation of the basic functions and operations. The tests then progress to complex integrated operations.

a. The primary objectives are to:

(1) Validate AF/AT operational procedures.

(2) Evaluate the suitability of the system for operational use.

(3) Evaluate the readiness of the people and the procedures for system deployment.

b. The approach to testing is to simulate one or more field sites and run various test scenarios and scripts causing a range of basic and complex events to occur. The events exercise the elements of the system involved in the tasks of ATC, system maintenance, and system support. Teams of field personnel are active in the tests. Operational suitability of the ISSS is determined by a combination of objective and subjective evaluations. The evaluations are performed using the pooled judgment of experienced field personnel. Quantitative data collected during the tests is used to support the evaluations. In each test type, test activities include normal operational conditions, degraded conditions, and procedures for transition from the PVD system.

c. These tests are of the following types:

(1) Basic operations.

(2) Combined operations.

(3) Integrated facility operations.

82.2.3.1 Basic Operations. The basic operations tests are conducted to evaluate basic CHI and routine functions used for individual ATC, system maintenance, and system support tasks. Relatively simple scenarios and scripts are used to exercise system functions. Emphasis is on the use of devices, fundamental elements of the system design, and basic AF/AT operational procedures.

82.2.3.1.1 Basic ATC Operations Tests. These tests concentrate on CHI and human engineering aspects of the new ISSS devices, and the basic functions of the ISSS used by ATC personnel. The tests involve the use of CC's and other devices by individual ATC operations personnel in isolation from other ARTCC activities. Basic ATC operations tests are categorized as follows:

a. Controller tests. The use of CC displays for individual ATC responsibilities.

b. Single sector operations tests. Routine operations for a single sector suite.

c. ATC supervisor/specialist tests. The use of ISSS displays and capabilities by the area managers, area supervisors, traffic management coordinators, data system coordinators, weather coordinators, and military operations specialists.

82.2.3.1.2 Basic System Maintenance Operations Tests. These tests address the use of the new equipment and capabilities for tasks associated with maintaining the

overall operational condition of the system. This includes status and configuration monitoring, certification, and hardware maintenance. These tests focus on the MMI and human engineering aspects of the CC's, test equipment, and any other devices used for maintenance activities. These tests also provide for the initial assessment of the operational suitability of new or changed AF operational procedures and FAA requirements for certification and maintenance. These tests are categorized as follows:

a. M&C position tests. The use of displays for system status, on-line certification, radar validation, and configuration.

b. See-all maintenance console tests. The use of the system see-all capability for viewing individual sector's scope presentation to assist with fault analysis.

c. Hardware maintenance tests. Perform maintenance actions (diagnostics, removal, replacement) for CC's and other ISSS elements.

d. Diagnostic software tests. Execute new diagnostic programs and existing NAS diagnostic/support software.

82.2.3.1.3 **Basic System Support Operations Tests**. These tests focus on the execution of tasks that support ATC in the ISSS environment. These tasks are affected by the new capabilities, new support software, and new work stations of the ISSS. These tests are categorized as follows:

a. Support software tests. Execute new and revised operational support software.

b. Software maintenance tests. Perform system builds, adaptation updates, actions for delivery/receipt of updates from the system software support facility.

c. Security tests. Evaluate system/software security, including deliberate actions to access and modify local and national data bases.

d. Training capability tests. Use detached console trainer and dynamic simulation capabilities for scenario development, execution, and record keeping.

e. Display recording and playback tests. Use the DRPS capabilities to record, store, and playback ATC operations.

f. Computer operations tests. Perform HCS functions in the ISSS environment.

82.2.3.2 **Combined Operations Tests**. These tests evaluate the actions and procedures required for interactions and coordination between personnel at an ARTCC. The effect of activities from another ARTCC on ATC operations is also evaluated. These tests involve more complex and realistic conditions than the basic operations tests in terms of ATC situations, staffing, and equipment configurations.

82.2.3.2.1 **Combined ATC Operations Tests**. These tests address the ATC operation in the ISSS environment. Test activities include procedures for intrasector, intersector, and interfacility communications and coordination. Coordination activities are simulated between controllers, supervisors, and ATC support specialists and special and complex ATC operations. Each test is conducted with various combinations of CC's and controllers, sector types, and sector locations within the simulated ARTCC. These tests are categorized as follows:

a. Two-sector operation tests. Intrasector and intersector coordination and routine ATC operations.

b. Multiple-sector operations tests. Intrasector and intersector coordination and coordination with area managers, traffic managers, area supervisors for routine ATC operations in a multiple sector configuration.

c. Complex ATC operations tests. ATC operations involving complex situations, including conflicts, military operations, and emergencies.

d. Degraded mode operations tests. Routine and complex ATC operations under autonomous mode, console failures, and simulated radar or NAVAID outages.

82.2.3.2.2 **Combined ATC/System Maintenance Operations Tests**. These tests examine the interactions and coordination procedures when system support tasks are performed during and in response to ATC operations. These tests are categorized as follows:

a. Situation/incident analysis tests. Uses data recording and analysis software and DRPS playback to analyze incidents such as aircraft conflicts and system aborts.

b. Routine support operations tests. Executes support programs to produce routine reports and perform software maintenance tasks.

c. Training tests. Configure for and conducts detached console training and dynamic simulation training sessions during ATC operations.

82.2.3.3 **Integrated Facility Operations Tests**. These tests evaluate full system level operations. Full shift operations are simulated in which ATC, system maintenance, and system support tasks are conducted concurrently. Testing is conducted under normal and degraded mode conditions. In addition transition procedures involving all ARTCC positions are tested. These tests are the culmination of the formal OT&E activities at the FAA Technical Center and are categorized as follows:

a. ISSS operations tests. Conduct full shift ARTCC operations under normal and degraded modes.

b. Shift rotation tests. Conduct testing with controllers and other positions through a week of rotating shifts (day, evening, and mid).

c. Transition tests. Verify proper operation of the ISSS in the various ISSS transition modes required for the sector-by-sector transition.

82.2.4 **System Shakedown**. ISSS system shakedown at the FAA Technical Center is conducted by ATR and ASM with assistance from ACN-130 as required. Tests are conducted in accordance with procedures developed by ACN and reviewed by ATR and ASM. The procedures conform with FAA development and maintenance of the ATC systems. These tests exercise interim maintenance methods necessary to simultaneously retain continuity for both the upgraded NAS systems and the remaining systems waiting upgrade. The physical characteristics are evaluated for operational suitability and personnel training in the use of new tools, such as Ada and the stand-alone simulator. The successful conclusion of these tests contributes to the DRR decision for deployment of the ISSS to the first field site implementation.

83. **SITE VERIFICATION**. There are seven major areas of site verification, which are discussed in the following paragraphs. Figure 83-1 summarizes these paragraphs. A facility test team is established by each facility to accomplish site verification. This team participates where needed in all phases of site verification. They may serve as test observers during contractor testing. During FAA integration and testing, they may serve as test directors, observers, or operators. Suggested roles and responsibilities are:

a. Onsite Coordinator. The onsite coordinator retains the overall site responsibility for all aspects of site testing, coordinates all site activities necessary for testing, assigns a test director for each test, and assists the test directors in assigning the members of each test team. The onsite coordinator provides the liaison between the test team and facility management, serving as the conduit for information and requests from FAA headquarters, regions, and ARTCC's.

b. Test Director. The test director is responsible for the testing effort, assignment of the test team members, and provision of direction to members of the team. The test director ensures that the individual test and test cases are properly structured, and equipment and personnel are available prior to commencing the test. During actual testing the test director serves as floor manager, verifying adherence to test procedures and that objectives for the test are met. In addition, the test director directs the timely and effective coordination with center and peripheral facilities' management to assure that proper and adequate staffing, scripts, support material, test equipment, and communications are available to support the conduct of the scheduled tests.

c. Test Observers. Test observers are members of the ISSS Implementation Team and are assigned by the onsite coordinator to monitor and record activities for specific test areas. They provide expertise to the personnel manning test positions (test operators) and ensure strict adherence to test procedures during the actual test conduct.

d. Test Operators. The test operators are ARTCC personnel assigned to the test positions. They are expected to follow procedures and request assistance from a test observer, if necessary.

83.1 **Contractor Testing**. The AAS contractor develops and conducts a verification test program at each site to ensure that his/her equipment is properly installed and complies with the contractual specifications. The following paragraphs discuss this testing.

83.1.1 **Installation and Integration Test**. These tests are the first tests conducted at each operational site. They are

conducted to checkout the installation, the interfacing, and the integration of the installed equipment.

Par #	Title	Major Feature
83.1	Contractor Testing	Verification of proper installation, intra- and inter- connection of ISSS equipment
83.2	Contractor Acceptance Inspection (CAI)	ISSS meets contractual requirements and FAA accepts ISSS
83.3	FAA Operational Integration Testing	FAA shows ISSS meets operational interfacing requirements
83.4	Certification	FAA certifies that ISSS provides accurate data according to procedures
83.5	Initial Operating Capability (IOC)	FAA audit shows all requirements for operational use in place
83.6	System Shakedown	Operational use shows ISSS is ready to replace PVD system
83.7	Joint Acceptance Inspection	Formal FAA audit of ISSS shows ISSS properly and completely implemented

Site Verification Matrix
Fig. 83-1

83.1.1.1 Installation and Checkout. The ISSS equipment is deployed and the CC's are assembled on-site. The AAS contractor conducts checkout tests in order to verify that the newly installed hardware, software, and firmware for the ISSS segment is:[128]

a. Functioning correctly.

b. Ready to begin interface and integration testing with the Government-furnished equipment at the ARTCC.

Prior to IOC the ISSS is connected to a test power source. After IOC, the ISSS is connected to critical power.

83.1.1.1.1 Contractor Tasks. The contractor performs the following kinds of tests:

a. Diagnostic tests verify the functional integration of configuration items.[129]

b. Diagnostic tests concurrently exercise all data paths and I/O channel paths of the full ISSS hardware complement.[130]

c. Electromagnetic radiation tests verify that the contract emission and susceptibility requirements are met.[131]

d. Demonstrations that the ISSS meets SPDIP specifications on system, i.e., fit and load for power and cooling.

To aid in the verification of the contractor's hardware prior to the connection to GFP, the contractor uses the DRPS and other ISSS components to verify the system to the extent possible. The ISSS central cluster processor, instead of the Host processor, will be used for as many testing activities as possible to minimize the impact to facility operations. When the Host processor or other GFE resources are required, the time periods will be coordinated with the facility.

83.1.1.1.2 FAA Tasks. The FAA performs the following tasks during this period:

a. Coordinating contractor work with site personnel.

b. Monitoring and maintaining the status of the checkout.

c. Ensuring that ARTCC and environmental support technicians are available if required.

d. Ensuring that the contractor gets site approval prior to applying power to new equipment.

e. Ensuring that the environmental conditions stay within SPDIP limits.

f. Balancing coolant systems after completion of installation and checkout.

83.1.1.2 Contractor Interface and Integration Testing. After successful completion of installation and checkout, the contractor verifies the interface of the ISSS equipment to the Government-furnished equipment in accordance with the ICD's and IRD's. These tests verify that the ISSS is integrated as specified in paragraph 20.10 of the System Level Specification. This verification includes both hardware and software. The contractor verifies and demonstrates that the Government property continues to function as it functioned prior to the connection. Tests are performed to verify that the functional and performance characteristics of the software are not degraded since testing at the previous site.[132]

83.1.1.2.1 Contractor Tasks. The AAS contractor:

a. Installs the functional software.

b. Installs the operational software.

c. Performs integration testing according to the SAP.

d. Verifies that the equipment is:

(1) Correctly integrated with its interfaces.

(2) Correctly interfaced with GFP in accordance with the associated ICD's.

(3) Electrically and physically compatible with the interfacing equipment.

83.1.1.2.2 FAA General Tasks. The FAA supports the contractor integration testing by:

a. Coordinating contractor activities with site personnel.

b. Maintaining a list of discrepancies called a pre-contractor acceptance inspection punch list."[133]

c. Monitoring contractor activities to ensure that contractor actions do not pose a threat to the integrity of the NAS.

d. Authorizing the connection of the ISSS equipment to the NAS.

e. Monitoring and maintaining the status of integration testing at the sites.

83.1.1.2.3 FAA Software Tasks. The FAA supports AAS contractor tasks and schedule for software development and integration as described in the following subparagraphs. The AAS contractor provides versions of the software system to the FAA for testing and verification in a timely manner in keeping with the contract milestones.

83.1.1.2.3.1 ASM-400 Site Program Bulletin. The National Engineering Field Support Division, ASM-400, provides for the national release of their assigned portions of software systems used for ATC and the support of ATC systems. ASM-400 tests and assembles these software systems for release under a series of site program bulletins signed by the manager of ASM-400. This task includes:

a. Testing the software systems delivered by the AAS contractor.

b. Verifying software documentation delivered by the AAS contractor.

c. Providing field support for software problems.

83.1.1.2.3.2 ATR-420 Site Program Bulletin. The National En Route Field Support/Maintenance Branch, ATR-420, provides for the national release of operational ATC software. ATR-420 tests and assembles the operational software package for release under a series of site program bulletins signed by the manager of ATR-420. This task includes:

a. Testing the software systems delivered by the AAS contractor.

b. Verifying software documentation delivered by the AAS contractor.

c. Providing field support for software problems.

Because of the impact on a facility staff, the delivery of a national release to the operational software package during a site installation shall be coordinated by ATR-420 and the individual site.

83.1.1.3 Electromagnetic Radiation. After successful completion of contractor interface and integration testing, the contractor verifies that the ISSS electromagnetic emissions and susceptibility meet the requirements of FAA-STD-020. These tests are for transient protection, grounding, bonding, shielding, and personnel protection. These tests verify that the ISSS is neither degraded by nor degrades the operation of all other equipment in the ARTCC.[134]

83.1.2 Site System Tests. Site system tests are conducted at each operational site. These tests ensure that the ISSS functions correctly and that it is fully compatible and properly interfaced with the other systems and facilities at each site.[135] The ISSS site system tests include the areas defined in the following subparagraphs.

83.1.2.1 Site Adaptation. The contractor demonstrates that the site unique adaptation data is correctly installed.[136]

83.1.2.2 Functional Characteristics. The contractor conducts a set of functional tests. These tests validate all adaptation-dependent operational functions. These tests ensure the correct operation of the system communication paths including interfacility interfaces. The tests use the maximum number of sector suites, CC's, and auxiliary displays for the given site. Testing addresses the following areas:

a. Data display functions.

b. Data entry functions.

c. En route control positions.

d. Display recording and playback.

e. M&C position functions.

Testing in these areas at the site is based on the ISSS factory system tests that were previously accomplished. These tests are repeated at each site primarily to demonstrate that the same tests can be successfully completed on the actual installed hardware system at each individual ARTCC. The above test areas are tested concurrently under test conditions identical to the factory test conditions. The test uses a scenario based on the scenario used in the ISSS factory system qualification test, modified for use at the site. The test uses a script for CC manual input. The script calls for execution of all manual entries and display management actions. Every CC is used during the test. Throughout the test, manual entries are interspersed with display management functions from six CC's.[137]

83.1.2.3 Failure and Recovery. The test uses cases from the failure and recovery tests conducted at the factory and at the FAA Technical Center. The contractor conducts the test to verify that the ISSS meets the following failure and recovery requirements:[138]

a. Autonomous mode operation which is described in subparagraph 30.2.1.

b. Sustained operations during and after all modes of startup and startover.[139]

c. Real-time periodic tests of software and hardware. These tests verify the fault tolerant operation of the system. Any out-of-tolerance condition triggers automatic reconfiguration.[140]

d. Centralized reporting of ISSS status and performance.[141]

83.1.2.4 Transition. The contractor verifies that the requirements for operational transitions between sector suite and the PVD's can be met.[142] These requirements are stated in Transition Concepts and Requirements, FAA-TRO-AAP-003 and the System Level Specification Paragraph 20.3.7.1.1.3.1, Operational Transition Between Sector Suite and Existing Sector Position Equipment.[143] The following subparagraphs summarize these requirements.

83.1.2.4.1 General Requirements. During the CAI the contractor verifies that the following automation, transition requirements can be met.[144]

a. The Host system with the new ISSS implementation software version will support the five transition modes required.

(1) PVD's only.

(2) PVD's only with ISSS connected.

(3) PVD and CC Dual Mode.

(4) CC's only with Display Channel connected.

(5) Normal ISSS CC operation with display channel equipment disconnected.

b. During the dual mode of operation identified in subparagraph 83.1.2.4.1 a(3) which facilitates the transition from the old system to the new system, the ARTCC provides full facility operation with either the PVD system or the ISSS for each individual sector.

c. ATC operations are switched from the PVD system to the ISSS either sector-by-sector or all at the same time at any one facility.[145]

d. When a Host supported PVD (with ISSS/Host transition software) is selected for ATC for an individual sector, all capabilities of the previous Host-supported PVD system are retained.[146]

e. Inputs from nonoperational equipment are capable of being inhibited.[147]

f. Switching of sector control responsibility from a PVD to a CC or back is capable of being exercised from a central supervisory point only.

g. The contractor prepares the facility for post ISSS equipment installations:[148]

(1) Without interruptions to ATC operations.

(2) Without degradation to ATC safety.

(3) Without rework of cabling.

83.1.2.4.2 Single ISSS Failure Requirement. The contractor verifies that recovery from a single ISSS failure is capable of being accomplished without a major system reconfiguration.

83.1.2.4.3 Multiple ISSS Failures Requirements. The contractor verifies that recovery from multiple ISSS

failures or Host is capable of being accomplished as follows:

a. If the ISSS and/or Host experience multiple failures, the system is capable of providing a situation display from DARC data and the services of the autonomous mode. Paragraph 30.2.1 describes autonomous mode.

b. When the ISSS is supporting AT operations in the autonomous mode, a Host computer is capable of startup and initialization with operational data.[149]

c. ATC operations are capable of returning to the Host-supported system. The Host flight plan data base will be updated from the current autonomous mode data base in the CC's.

d. It shall be possible to obtain output radar and flight data at the old control room display devices driven by the HCS as well as at the sector suites, in order to verify and manually maintain consistency of data and to allow control responsibility to be transferred on a sector-by-sector basis from one control room to the other.[150] Data input will only be allowed from the controlling position (either CC of PVD) for that individual sector.

83.1.2.5 <u>On-line Certification</u>. The contractor verifies the correct functioning of on-line certification.[151]

83.1.2.6 <u>Security</u>. The contractor verifies that the ISSS:[152]

a. Protects its data, data stores, and hardware components from unauthorized manipulation.

b. Provides service to authorized users only.

c. Records all authorized and unauthorized attempts to use the ISSS.

d. Provides uninterrupted ISSS services to authorized ISSS users. ISSS services continue in spite of attempts by unauthorized persons to use either automatic or manual means to disrupt those services.

83.1.2.7 <u>Support Functions</u>. The contractor verifies that the support function requirements are met.[153]

83.1.2.7.1 <u>Training</u>. The contractor conducts tests that verify that the requirements for the training support functions are met.[154] Paragraph 91 describes the training provided by the contractor.

83.1.2.7.2 <u>Data Reduction and Analysis</u>. The contractor verifies that the data reduction and analysis (DR&A) programs delivered to the site meet the requirements of the contract. In general the ISSS provides for the timely off-line analysis of recorded ISSS technical and operational performance data.[155] DR&A provides the following specific features:

a. A wide range of data selection criteria including the logical combinations of the following:

(1) AT operations data such as:

(a) Time.

(b) Data type.

(c) Flight identity.

(d) Beacon code.

(e) Geographic area and volume.

(f) Data source and destination.

(2) System performance data such as:

(a) Processor use.

(b) Storage use.

(c) Channel use.

(d) Device use.

(e) Sub-program call count.

(f) LCN use.

(g) End-to-end response time.

(h) Device contention.

(i) Message traces.

(j) Interrupt processing performance.

b. Decoded hard-copy tabular lists, statistics, histograms, and geographically-oriented plots.

83.1.2.8 <u>Manual Reconfiguration</u>. The contractor verifies that the ISSS responds to operator requests for

manual reconfiguration. These reconfiguration do not degrade ATC operations. The test includes a representative number of Host reconfiguration. All manual reconfiguration use the background scenario during the test.[156]

83.1.3 Site Acceptance Test. During the site acceptance the contractor uses regression testing to verify that the ISSS functions and performs correctly and is ready for use during IOC.[157]

83.2 Contractor Acceptance Inspection. The Implementation Branch, AAP-240, has the primary responsibility for the CAI. The CAI is the formal acceptance, by the agency from the contractor, of an installed ISSS.[158] The AAS prime contractor's qualification and acceptance[159] tests at the site[160] correspond to the CAI testing. The CAI at each operational site consists of a site system test (SST) and a site acceptance test (SAT). Figure 83-2 shows the relationship among these terms. The site system test precedes the SAT. Between the SST and the SAT the contractor changes the software to reflect updates that may be necessary to bring the software to the same functional level as the software in use with the PVD system. These updates include the accommodation of adaptation changes and national patches.

<table>
<tr><td colspan="2">Contractor Acceptance Inspection (CAI)</td><td>STD-036 Term</td></tr>
<tr><td colspan="2">Site Qualification and Acceptance Test</td><td>SLS Term</td></tr>
<tr><td>Site System Test
Paragraph 83.1.2</td><td>Site Acceptance Test
Paragraph 83.1.3</td><td>SLS Terms</td></tr>
</table>

CAI Terms Diagram
Fig. 83-2

83.3 FAA Integration and Testing. This paragraph describes the tasks performed in the FAA integration and test (I&T) phase in preparation for ISSS usage in the NAS environment. FAA I&T is an ARTCC responsibility which requires operational software verification, operational procedures validation, and ISSS certification checkout activities necessary for the ISSS to achieve initial operational capability. Testing is conducted by site FAA personnel with contractor support. The Implementation Branch, AAP-240, has the management responsibility for FAA I&T, but the site has responsibility for the detailed test planning and completion.

83.3.1 Test Readiness Review (TRR). A TRR is held at the beginning of the FAA I&T period to establish resource allocation, system scheduling, verification methodology, documentation, and individual task assignments. This review is chaired by the onsite coordinator with the participation of the ISSS implementation team members, ARTCC test personnel, and contractor support personnel. Items that are addressed in the review are:

a. Objectives of the FAA I&T phase and site ISSS activities.

b. Assignment of ARTCC and contractor support personnel to test teams.

c. Roles and responsibilities of the test team members.

d. Methodology and scheduling of the test and validation activities.

e. Software build, patch incorporation, and software test activities to ensure the current ISSS operational software version, site adaptation data, and patches are available.

f. Verification documentation and ISSS operational procedures.

83.3.2 FAA Integration and Testing Methodology. The FAA I&T phase follows the successful completion of SAT and is performed in accordance with the plans developed for ISSS implementation. This phase of implementation evaluates the ability of the ISSS to function in the ATC environment and provides the opportunity to identify and resolve procedural deficiencies during preparation of the ISSS for operational use. The activities performed during FAA I&T build confidence in the ISSS. The ISSS is not used for ATC operations during the FAA I&T phase. Testing with simulated data is performed. When any testing is performed that reduces the backup provided to the operational system, the testing period is thoroughly coordinated and is scheduled during periods of low AT activity to minimize operational impact. The following tests and validations are conducted during FAA I&T.

83.3.2.1 Installation and Integration Test. These tests are conducted to verify the installation, interfacing, and integration of the installed equipment.

83.3.2.2 Software Integration. Operational software is delivered and implemented in accordance with existing FAA orders. Each ARTCC incorporates local site patches in accordance with FAA orders. Updates to site adaptation data are incorporated as necessary by the ARTCC. Then the list of tests and software integration is performed in accordance with the ISSS implementation plan prepared by the site. The following tests that were previously completed by the contractor are verified:

a. Software/site adaptation tests.

b. Support software tests.

c. Functional baseline test.

83.3.2.3 Site System Tests. These tests ensure that the ISSS functions correctly and that it is fully compatible with the other systems and facilities at each site. These tests include verification that site adaptation data is correctly installed, validation of adaptation-dependent operational functions, verification of system communications paths, data display functions, data entry functions, and recording and playback functions.

83.3.2.4. Failure Recovery. FMT is required at the first two sites and is a site option at subsequent sites. Each site includes regression testing of software and hardware corrections as part of FAA I&T.

83.3.2.5 Operational System Tests. The operational system tests demonstrate that the ISSS, when operating with the site-specific operational configuration, performs at the same level, or an improved level, of performance as the Host. The following tests which are demonstrated during contractor I&T are required for the operational systems tests:

a. System interface tests.

b. Reconfiguration tests.

c. Failure/recovery tests.

d. Cutover to new work stations.

e. On-line certification tests.

83.3.2.6 Procedure Validation. The site ensures that affected operating and support procedures have been reviewed and updated. During this phase of testing, operational and support procedures are executed with the ISSS and validated for operational usage. FAA I&T presents an opportunity for the ARTCC personnel to refine the procedures. These procedures are incorporated into the FAA documentation.

83.3.3 Contractor Support. The contractor provides both hardware and software operational and maintenance support, and provides software technical expertise to ensure that all software performs in the correct manner.

83.3.4 FAA Technical Center Site Support. The FAA Technical Center, ACN-130, provides support to the site prior to CAI and continuing into the FAA I&T Phase. Support is provided in the hardware, software, and CHI areas.

83.4 Certification. The Technical Standards Branch, ASM-120, has the primary responsibility for the certification of the ISSS. Technical certification is the periodic verification that the advertised or required quality and scope of service is being provided to the users. The certification of the ISSS is based on the ISSS technician's qualifications in three areas: professional attainment, capacity for independent judgment and responsible action, and qualifications to perform assigned duties as attested by having met the requirements of the technician certification program.[161] The technician certifies the ISSS by attesting that the critical parameters are within the tolerances or limits prescribed in the maintenance directives and that the advertised service is being provided to air traffic controllers.[162]

a. The AAS contractor identifies all key performance parameters, i.e., critical indicators of whether or not the system is satisfactorily performing its intended function. The contractor provides recommended standards and tolerances and the means to verify satisfactory performance. Maximum use is made of internal, automated equipment, systems and functional verification methods.[163]

b. The ISSS initial certification involves a lengthy testing and evaluation of the system. The certification is based upon applicable standards and tolerances as provided by ASM-600. Software diagnostics are used whenever practical.[164]

c. The ISSS provides for commands to test the ISSS hardware and software. The system performs tests to the level required for certification and reports the results to the device requesting the test.[165] The ISSS implementation task of certification includes:

(1) Establishing certification parameters and limits.

(2) Issuing appropriate certification criteria and technical guidance.[166]

(3) Providing on-line testing and certification.

(4) Providing training for certifiers. See paragraph 91.3.4.

83.5 Initial Operating Capability. The IOC is that point when the equipment hardware and software installation and testing have been completed and meet defined requirements.[167] IOC is the declaration by AT and AF

managers, in concert with responsible FAA headquarters and regional personnel, that the ISSS (including hardware, software, procedures, and personnel) is physically and functionally capable of being certified and of replacing the current AT system during selected periods of time. Upon declaration of IOC, a facilities master file (FMF) change is implemented by the site personnel to transfer the ISSS from a preconstruction to a test/operational mode. Equipment element failures of any ISSS equipment are entered into the NAPRS for failure mode tracking.[168] The declaration of IOC also serves as a milestone in the facility integration of the system. The following are accomplished prior to IOC:

a. NAS operational software has been validated.[169]

b. The structured phase of controller and system engineer workforce training on the CC CHI has been completed.[170]

c. Operations and maintenance training for the ISSS transition procedures and revised operational and maintenance procedures have been completed.[171]

d. The structured phase of ISSS hardware and software maintenance training for maintenance to be performed by the FAA has been completed.[172]

e. Evaluations have determined the adequacy and acceptability of procedures.[173] All ISSS operational and maintenance procedures have been validated.[174]

f. Procedures have been established and validated for transition, e.g., cutover to new work stations and transition in and out of autonomous mode.[175]

g. All support systems and interfaces are in place.[176]

h. ARTCC AF personnel have received the appropriate certification.[177]

i. Operations have demonstrated an IOC.[178]

j. Facility personnel have established confidence in the ability of the ISSS to function safely and effectively in the ATC environment.[179]

k. Current FAA-accepted final copies of all ISSS technical documentation have been delivered.[180]

l. A partial JAI is held to formally declare IOC of the system. The partial JAI includes a documentation review to assure that the facility adequately meets both operational and maintenance requirements. When the JAI has been completed, the ISSS is ready to begin the system shakedown phase.[181]

83.6 <u>System Shakedown and Operational Transition</u>. This paragraph identifies the tasks for introducing the ISSS to the operational ATC system. This period of ISSS implementation demonstrates that the ISSS, with existing peripherals, can be used effectively in the operational ATC environment and that ARTCC personnel can support these operations. The activities during system shakedown lead to the integrated readiness of personnel, procedures, and equipment in the operational use of the ISSS. Each facility is responsible for system shakedown of the ISSS at their site.

a. System shakedown begins after FAA I&T is complete and IOC is declared. It is the period in which the ISSS is first used in an operational environment. Shakedown activities focus on the following specific areas:

(1) Ensuring that facility personnel develop confidence in using the ISSS, learn the system's capabilities, and become proficient in diagnosing and repairing problems.

(2) Verifying operational functions, including site-specific adaptation data and system configurations.

(3) Evaluating suitability of displayed operational data and making any necessary software adaptation adjustments.

(4) Evaluating operational and maintenance proficiency.

(5) Evaluating training and providing additional or revised training if necessary.

b. In addition to the verification of specific functions, the overall system level performance is verified. The areas that are evaluated and verified are:

(1) ISSS hardware and software.

(2) Full ISSS operation, autonomous mode, and recovery from autonomous mode.

(3) Control room operational procedures.

(4) Certification procedures.

(5) Procedures and support for maintenance.

(6) System support.

(7) Data base maintenance activities.

c. The ISSS design allows transferring sectors from the PVD control room to CC's in a sector-by-sector transition. Any single sector or number of sectors can be made to transition to the new control room at one time. ISSS allows for monitoring of the PVD control situation by the CC controller prior to assuming control of the sector. Once control of the sector is transferred, the PVD position is able to monitor the CC position allowing immediate backup capability.

d. System shakedown is planned to be conducted in phases. In the initial phases, the CC's are used to conduct ATC for a limited period of time by a limited number of sectors at one time. As confidence is built in the ISSS and as personnel develop proficiency in using the system, an increasing number of additional sectors use the CC's for ATC. This continues until all sectors have continuous operations on CC's. This is the final phase of system shakedown.

e. Upon completion of system shakedown, an ORD is declared and a JAI performed. ORD is the formal declaration that the system meets all requirements for full operational use and is ready to become the primary system for ATC. System shakedown supports the determination by the JAI Board that the ISSS is ready for full operation in the NAS.[182]

83.6.1 System Shakedown Phases. In the sector-by-sector transition strategy any number of sectors can be operational on NAS with CC's and the remainder on PVD's. Therefore, the transition phases can be tailored to the operational requirements and staffing availability at individual facilities. The four phases defined in the following subparagraphs form the basis of the transition strategy used, although changes can be made to meet particular facility requirements. Autonomous mode is used for ATC during part of each phase. This also provides the workforce experience in using the backup system. Figure 83-3 summarizes the operational conditions for the phases of system shakedown.

83.6.1.1 Phase 1. The objectives of this phase are to verify the procedures, adaptation data, and operational acceptance of ISSS with live ATC operations. In addition, transition procedures are verified during this phase. While CC's are used for ATC operations for individual sectors within the facility during phase 1, only one sector per facility is enabled in the new control room during any phase 1 session. Each facility sector is operated in the new control room during this phase as part of the verification process.

a. Part of the operational workforce uses CC's for ATC operations and begins the process of developing confidence in ISSS. One sector with three people (two controllers and one supervisor) per sector is supported in each session, each person having ample opportunity to use the new equipment. A CHI expert is available to answer any questions that may arise (this CHI expert is either an additional controller or the supervisor).

b. Whenever the AT for a sector is controlled in the new control room, that sector is staffed (monitored) in the old control room. The PVD position continues to receive flight plan information and updates. The radar display continues to be updated, but the position is not eligible for message input. The controllers at the PVD position use the VSCS to monitor sector communications at the CC's. This allows control of the sector to be quickly transferred back to the PVD position if that becomes necessary. Part of phase 1 activities include exercising autonomous mode.

83.6.1.2 Phase 2. The objective of this phase is to allow all of the operational workforce to experience and develop proficiency in using CC's in an operational environment. During this phase, each controller is given several opportunities to use CC's to control AT on operational sectors. At any given time, no more than one sector from each area of specialty is operational in the new control room. All sectors in the area are given operational time in the new control room.

a. Initially in phase 2, sectors are transitioned to the CC's only during periods of lower traffic loads and for limited periods of time. Windows of opportunity are used for scheduling a particular operational session. Windows of opportunity are based on a number of factors such as AT activity, shift changes, readiness of operational workforce, weather, and available

staff. As confidence in the system is developed, sectors remain on CC's most of the operational day with all levels of traffic load.

b. The additional staffing required is two controllers and one supervisor for each area. As many personnel on duty as practical are scheduled for periods of time working the sector that is operational on CC's. A CHI expert is available for each area at all times that a sector is operational on ISSS. Facilities develop transition strategies that allow this when preparing their site implementation plans. Whenever the AT in a sector is controlled on CC's, that sector is staffed (monitored) at a PVD position in the old control room.

	Phase 1	Phase 2	Phase 3	Phase 4
Sectors Using ISSS	1	1/area	2-all/area	All
Air Traffic Conditions	Light	Light to Moderate, Then All	All	All
Monitoring in PVD Control Room	Yes	Yes	Yes, until Assignment to ISSS	Very Limited or None
Additional Staffing				
Controllers	2	2/area	2-4/area	None
Supervisors	1	1/area	1/area	None
CHI Experts	1	1/area	1/area	1/area
Approximate Duration	3 days per area	Approximately 3 weeks allow workforce familiarity	3-5 days per sector	1-4 weeks
Other Considerations	All facility sectors given operational time on ISSS in Phase 1 and 2			

Operational Conditions for System Shakedown Phases
Fig. 83-3

83.6.1.3 Phase 3. The objectives of this phase are to verify the interactions between sectors in one area, sectors in different areas, and to verify the procedures for operating a complete area in the new control room. In addition, this phase allows the operational workforce to build more confidence in the ISSS. This phase marks the first time sectors remain operational in the new control room continuously.

a. Phase 3 activities are based on two or more sectors in each area being operational on CC's at any time. Initially two sectors from each area are operational in the new control room. These are basic sectors that are not candidates for further decombining as the AT load increases. These sectors are operational on the CC's for most of the operational day, but may be combined on PVD positions in the old control room or combined on CC's in the new control room when staffing dictates. Whenever the AT in a sector is controlled from a CC position, that sector is staffed (monitored) at a PVD position in the old control room.

b. After a period of time determined by the facility, the operational experience with each of the sectors in the new control room will be reviewed. Monitoring at PVD positions is discontinued for all sectors having a satisfactory review. These sectors may be recombined on PVD positions or CC positions if staffing dictates (possibly on the midshift). However, when they are decombined, they are operational on CC's.

c. A new sector is then transitioned and operates in the new control room with monitoring in the PVD control room. After a period of operating in the new control room, the operational experience is reviewed. Monitoring of the sector at the PVD position in the old control room is discontinued if this review is satisfactory.

d. This process continues until all sectors are permanently assigned to CC's. As shown in figure 83-3 it is estimated that 3 to 5 days of operation on CC's will be needed for each sector before it is permanently assigned to ISSS. Throughout this phase, a CHI expert is available in each area to answer any questions. Additional staffing needed is estimated to be four controllers and one supervisor per area initially in phase 3. After the first two sectors are permanently assigned to the new control room, the additional staffing needed is estimated to be two controllers and one supervisor per area. The staffing estimate stated here is a technical analysis for planning of what may be necessary to perform the task, and does not attempt to establish human resource requirements.

83.6.1.4 Phase 4. The objective of this phase is to conduct a full center shakedown prior to ORD. All sectors in all areas are operational in the new control room.

During the day and swing shifts, each area has a CHI expert available. During the mid watch, one CHI expert is available for the entire center. The length of this phase is expected to be 1 to 4 weeks. Activities during this time period prepare the facility for the ORD. Final refinements are made to operating procedures and any necessary adjustments to adaptation are made. A final review of system, subsystem, software, and equipment documentation is done to ensure completeness and accuracy in preparation for ORD.

83.6.2 Operational Transition. The sector-by-sector approach to ISSS transition is to have increasing numbers of sectors operational on CC's while maintaining operations for the remaining sectors in the PVD control room. Procedures must be in place to provide support to operations in both control rooms prior to the transition of the first sector to CC's. The NAS ATC software that supports PVD's and CC's must be operational. All operational support positions such as Traffic Management, Area Manager-in-Charge (AMIC) and the Systems Engineer (SE) must be able to support both control rooms. The actual transition of a sector from one control room to the other requires careful coordination between personnel in both control rooms and with the support positions. The sector-by-sector transition is meant to minimize the number of special procedures and changes to current procedures required for ATC operations during system shakedown. Some special procedures are necessary when a facility has operational sectors on CC's and PVD's.

83.6.2.1 Configuration of Systems. The management of NAS, DARC, and VSCS is more complex during system shakedown when supporting both PVD's and CC's. The following subparagraphs discuss the configurations of each of these systems.

83.6.2.1.1 NAS System Software. Prior to system shakedown, a NAS software system build incorporates functions necessary for ISSS. This system is functional with PVD's only, PVD's and ISSS, or ISSS only. Thus establishing three different modes of operation. The active mode is set with environmental parameters in the initialization deck during system initialization. The system is tested during FAA integration and testing to ensure proper functioning.

a. This system incorporates a dynamic system parameter called the current sector suite equipment (CSSE) parameter. The CSSE parameter is a dynamic parameter that can be set to PVD only, ISSS only or both PVD's and ISSS. If there were no system shakedown activities taking place, this parameter would be set to PVD. The Host would not support ISSS as the LIU's would not be logically available [they would automatically be no-op'd (No-Op logical device, no-op service is used to cause all future I/O operations involving the specified logical device to be ignored) when the CSSE parameter is set to PVD].

b. When sectors are to be supported in both control rooms, the CSSE parameter is set to both. NAS software continues to support sectors on PVD's and also supports corresponding CC positions. The surveillance and flight plan data provided to a PVD position is also provided to a CC position. As a result, there must be common console positions corresponding to each active sector in the PVD control room. The CC positions do not require staffing by controllers. However, the SE will need to monitor the functioning of the equipment at these positions as if they were active sectors. When combining and decombining sectors, the combine sector (CS) message continues to be used to resector. Although surveillance and flight plan data is provided to corresponding positions in both control rooms, only one position has message input capability. A new message is available to adapted supervisory positions (Area Supervisor, AMIC and SE positions) that allows message inputs from either the PVD or ISSS position for each sector. When set to PVD, it allows inputs only from the PVD position for a sector. When set to ISSS, it allows inputs only from the CC position for a sector. This message can only be used when the CSSE parameter allows the system to support both PVD's and ISSS.

c. When system shakedown has progressed to the point where surveillance and flight plan data are no longer needed at PVD positions, the CSSE parameter is changed to ISSS only. The display channel and NRKM (non-radar keyboard multiplexor) are automatically made unavailable (no-op'd) to Host. Information from the Host is now displayed only on CC's. This is done during Phase 4 when it is determined that printing of flight strips at PVD positions is no longer necessary.

d. After ORD, the NAS system software is set to provide only for ISSS. This system is operational before the PVD equipment is actually removed from the old control room.

83.6.2.1.2 DARC. During system shakedown, DARC and the ESI are capable of providing simultaneous support to PVD's and CC's in the following manner:

a. Surveillance data is sent to both sector positions in the PVD and CC control rooms. A toggle switch on the system status and control cabinet of the DARC system makes DARC available to PVD's only or to both PVD's and CC's.

b. Input data is enabled by sector, either from the PVD control room or the common console control room, depending on which location has DARC message input eligibility for the sector at that time. A message entered at the M&C position will allow DARC message input from either the PVD or CC position for each sector.

When combining and decombining sectors, the DARC bi-directional interface with the Host provides for configuring DARC and NAS with a single message. When Host is not available, DARC must be reconfigured from the SE or AMIC positions.

83.6.2.1.3 VSCS. When sectors are combined and decombined, VSCS can be reconfigured from area supervisor positions in either control room or the AMIC and SE positions. When a PVD or CC position is monitoring a sector, all communications at the controlling position are monitored. During transition between PVD's and CC's, VSCS is reconfigured to allow the new controlling position primary access of ground-to-ground and ground to air communications.

83.6.2.2 Operational Support Functions. System shakedown activities require close coordination between the SE, AMIC, Area Supervisor-in-Charge (ASIC), Traffic Management Unit (TMU), and the Transition Coordinator in managing the transition. Area supervisors need to carefully monitor those sectors impacted by the transition activities and coordinate with the ATC specialists involved.

a. The sector-by-sector transition allows flexibility in how each facility manages their transition. As part of developing their site implementation plan, each facility needs to carefully plan how their transition is managed. Each facility needs to decide which positions are responsible for entering equipment reconfiguration messages for VSCS, NAS, and DARC when sectors are combined and decombined.

b. A sectorization display is available to the AMIC, SE, and TMU with an indication of the status of sectors involved in transition. The display shows whether the PVD position or sector suite position for a sector has message entry capability.

c. The following subparagraphs discuss the functions of the operational support as related to transition activities for ISSS.

83.6.2.2.1 Systems Engineer. The SE continues to oversee the functioning of all equipment that is part of the NAS. The transitional E-complex permits the SE to monitor operations in both control rooms.

83.6.2.2.2 Area Manager-In-Charge. The AMIC continues to oversee all AT operations. The transitional E-complex permits the AMIC to monitor operations in both control rooms.

83.6.2.2.3 Area Supervisor-in-Charge. Area supervisors are staffed in both control rooms when system shakedown activities are scheduled for an area of operation. One ASIC remains responsible for each area of operation. The AMIC and transition coordinator coordinate shakedown activities with the ASIC. In most facilities, area supervisors are responsible for entering messages to reconfigure VSCS and NAS when sectors are combined or decombined. Area supervisors need to carefully coordinate all transition activities with the ATC Specialists for the impacted sectors.

83.6.2.2.4 Traffic Management Unit. The TMU continues to monitor traffic flows and sector traffic loads throughout the facility. During system shakedown, TMU works closely with the transition coordinator (discussed in the following paragraph) providing: alerts of significant impending changes, an increased level of vigilance for sectors involved in transition, and appropriate actions to assist transition recovery when required. The TMU is relocated from the PVD control room to the ISSS control room at an appropriate time determined by each facility. The TMU transition uses the sector-by-sector transition process described herein for an area of specialty; however, this process is anticipated to be more rapid than the operational areas. Duplicate cabling for Apollo equipment allows TMU operations to be moved back to the PVD control room if this becomes necessary.

83.6.2.2.5 Transition Coordinator. A transition coordinator is present at all times during system shakedown. The AT AAS Onsite Coordinator and other designated facility personnel serve as transition coordinators. The transition coordinator is responsible for coordinating all shakedown activities impacting the control room. This individual provides guidance to the SE, AMIC, and ASIC's in carrying out transition activities

outlined in the SIP. All transition activities are coordinated with the SE, AMIC, and ASIC's. The transition coordinator also ensures that CHI experts and other personnel necessary for transition are available in a timely manner. The sectors selected for transition to ISSS are determined by coordination with TMU, the SE, AMIC, and ASIC's.

83.6.2.3 Individual Sector Transition Steps. During system shakedown and transition from PVD's to the CC's, sector control is transferred from one control room to the other. Sector surveillance, flight plan and other data are displayed for a sector on equipment in both control rooms, but only one location has actual control of the sector at any time. There are four steps required to transition control responsibility from the PVD position to the CC position. The following subparagraphs outline these steps and the last subparagraph describes the steps for returning to the PVD position.

83.6.2.3.1 System Coordination (Step 1). The purpose of this step is to ensure that all necessary personnel are in place and that all equipment systems are prepared for transition. Staffing for the sector must be in place in both control rooms. The system is in the mode that supports PVD and CC operations (see paragraph 83.6.2.1.1) which provides surveillance and flight plan data to positions in both control rooms. Controllers at the CC's invoke their preference settings for the position. VSCS equipment is configured so that controllers at the CC's monitor communications of the PVD positions. DARC is configured so that both positions receive backup surveillance data. Inputs to DARC can only be made by the PVD position during this step.

83.6.2.3.2 PVD Operations with Common Console Monitoring (Step 2). This step allows the CC controllers to become familiar with sector traffic and information. The PVD position controllers remain responsible for control of sector traffic and have sector message input capability. The controllers at the position monitor the PVD position and are not eligible for data entry or ground-to-air communications. This monitoring allows the CC controllers to become familiar with the sector situation and facilitates the transfer of control to the new control room. It is similar to the time period before a transfer of position responsibility briefing when a relieving controller observes a position before assuming control.

83.6.2.3.3 Transfer of Position Responsibility (Step 3). The controllers at the PVD position brief the controllers at the CC position on sector operations before responsibility for the sector is transferred. The transfer of position responsibility briefing used during normal operations provides the basis for the briefing used during transition. However, special emphasis is placed on verification of data between the two positions when transitioning between a PVD position and an ISSS position.

a. In transitioning a sector from a PVD position to a CC position, information handled by FDEN's is verbally passed from the PVD position to the CC position for all flight plans. This includes information contained in the following FDEN's:[183]

(1) Status of radar service (established, terminated, lost).

(2) Data block point out.

(3) Heading/direct/arc/radius.

(4) Data field(s) not forwarded.

(5) Verified assigned altitude.

(6) Altitude restrictions.

(7) Approval of inappropriate altitude for direction of flight.

(8) Report altitude reaching/leaving other than assigned.

(9) Reported altitude reached/vacated.

(10) Clearances and instructions.

(11) Assigned speed restrictions.

(12) Holding clearance.

(13) Frequency change.

(14) Clearance void time.

(15) Estimate and actual time at posted fix.

(16) Pilot estimate at next fix.

b. The controllers at the CC position make FDEN entries as the information is verbally passed.

c. When the briefing for transfer of position responsibility is completed by the controllers, a supervisory message is entered to transfer message input capability from the PVD position to the CC position. A VSCS configuration message is entered at this time to complete the reconfiguration of equipment. Reconfiguration

of VSCS equipment allows controllers at the CC's access to the sector's ground-to-air and ground-to-ground communications. Controllers verbally confirm that transfer of position responsibility is completed.

83.6.2.3.4 Common Console Operations with PVD Monitoring (Step 4). Controllers continue to staff the PVD position and monitor all sector operations. The PVD position continues to receive flight plan information and updates and the controllers keep all flight strips updated. PVD controllers use VSCS to monitor sector communications at the CC's. This allows the sector to be quickly returned to the PVD position if necessary. This monitoring is discontinued during Phase 3.

83.6.2.3.5 Return to PVD Console Operations. When it is time to transfer control of the sector back to the PVD position, steps similar to those identified in paragraph 83.6.2.3.4 are required. A transfer of position responsibility briefing is completed by the controllers.

a. If a PVD position has been monitoring the CC position, the information contained in the FDEN's will have been recorded on the flight strips by the monitoring controllers while they were monitoring the sector. If the sector is being transitioned from a CC position to a PVD position where no monitoring has been done, the CC position strip requests flight strips for the PVD position. The CC position can request flight strips for the PVD position on an individual or fix posting basis. The information contained in FDEN's is then verbally coordinated with the PVD position. The controllers at the PVD position mark their flight strips with the necessary information as the information is verbally passed.

b. After the transfer of position responsibility briefing is completed, supervisory messages (NAS, DARC, VSCS) are entered to transfer message input capability and frequency access from the CC to the PVD position. The CC position continues to monitor the sector for a period of time to verify the successful transfer of control.

83.6.2.4 Operational Considerations. The sector-by-sector transition presents some unique operational considerations that need to be addressed during system shakedown. ATC is conducted from two control rooms, each having very different equipment. The following subparagraphs describe areas of operation that need special consideration during system shakedown.

83.6.2.4.1 Mixed (PVD/ISSS) Operation. During Phases 1 through 3, of system shakedown, sectors are operational on PVD's and CC's. There are several controller commands and FDEN's that are sensitive to a mixed (PVD/ISSS) operation. When the sectors involved are operational on CC's, these commands and FDEN's are passed automatically from sector-to-sector. However, these commands and FDEN's cannot be automatically passed to a PVD position. Until all facility sectors are operational on CC's, the actions and information contained in these commands and FDEN's are verbally coordinated.

a. The following controller commands are affected:

(1) Amend. An amendment to an FDEN is not passed to a PVD sector.

(2) Delete. Deletion of FDEN's at CC positions is not automatically distributed to PVD positions.

(3) Hold. PVD positions do not receive FDEN's that can be entered with this command from a CC position (i.e., direction, turns, leg lengths, time entering hold, time leaving hold).

(4) Point Out Full Data Block (FDB). Data blocks can be pointed out to any other position, regardless of whether it is a PVD or CC position.

(5) Point Out FDE. FDE point outs cause a strip to be printed at a controlling PVD sector, and an FDE to be displayed at the monitoring CC.

(6) Strip Request (SR). An SR causes an FDE to be displayed at a controlling CC position, and a printed strip to be received at the monitoring PVD position. An SR causes a strip to be printed at a controlling PVD position, and an FDE to be displayed at the monitoring CC position. When a controlling PVD position does an SR to itself, the monitoring CC position displays an FDE.

b. The FDEN's that are affected by a mixed PVD/ISSS operation are the FDEN's for speed control and heading. They are not automatically passed from a CC position to a PVD position.

c. These controller commands and FDEN's are passed automatically from CC sector to CC sector. They are not passed to a PVD sector. Controllers continue to verbally coordinate this information in all cases until all sectors are operational on CC's in Phase 4 and the facility decides it is appropriate. Between CC sectors, this verbal coordination verifies that the information was passed and it ensures that any PVD monitoring positions also receive the information.

83.6.2.4.2 Combining/Decombining Sectors. During the first three phases of system shakedown, sectors are opened in the ISSS control room with monitoring at the PVD position in the old control room, as described in paragraph 83.6.2.3.3. As personnel gain experience and confidence in the ISSS, the monitoring is discontinued.

a. This monitoring is a critical factor to be considered in determining where sectors are combined and decombined. The purpose of the monitoring is to be able to resume control of the sector at the PVD position on very short notice. This could occur if a hardware or software problem develops with ISSS, a traffic situation develops that increases the sector complexity to a point where the controller is no longer comfortable operating new equipment, or a procedural problem develops warranting return to PVD operations. This dictates two things:

(1) The controllers at the monitoring position must pay close attention to the sector that they are monitoring.

(2) Controllers must be able to accomplish the return transfer of position responsibility quickly.

b. The controllers at the monitoring position cannot be distracted by controlling or monitoring AT in an additional sector other than the one being monitored. Thus, whenever monitoring is necessary for a sector, the airspace being controlled must match at both the PVD and CC position. A sector controlling traffic on CC's with the corresponding position in the PVD control room monitoring that same sector and controlling another sector would create a situation where the controllers at the monitoring position would not able to devote their complete attention to the ISSS sector. This would then require additional time to complete a position relief briefing and transfer of control if this became necessary on short notice. There would also be interruptions during the relief briefing and transfer of control while the monitoring position deals with their other sector. The two positions must be identical in terms of airspace and traffic in order to simplify and expedite the relief briefing and transfer of control to the monitoring position if necessary.

c. When a sector is to be opened on CC's with monitoring at a PVD position, the sector is first opened by itself on a PVD position. Once controllers in both control rooms are ready, the transfer of control can take place and monitoring accomplished without any distractions following the steps outlined in paragraph 83.6.2.3. Similarly, if two sectors are combined, the same combination is opened in the new control room.

d. Any subsequent combining or decombining of sectors is matched one for one in both control rooms. For example, if combined sectors that are controlled from a single CC position with monitoring at a PVD position are decombined, a new CC position and a new PVD monitoring position are prepared. The position monitoring the combined sectors first briefs the new monitoring position on sector information and forward the appropriate flight strips to the new position. The controlling position for the combined sectors and the new CC controlling position then conduct a transfer of position responsibility briefing. Both PVD monitoring positions monitor the transfer of position responsibility.

e. A similar sequence is followed in combining two sectors. If a sector controlled on a CC position is being combined on another CC position, the position that is monitoring the sector that is being closed should first provide a briefing and forward the appropriate flight strips to the position that is to monitor the combined sectors. The controllers at the CC positions then transfer position responsibility. Standard procedures for combining sectors are followed by the CC sectors with relief briefings being accomplished. The controllers at the PVD monitoring positions monitor the transfer of position responsibility.

f. An alternate approach in opening sectors on CC's is to transfer the sector from the combined PVD position to the CC position without first

opening it on a PVD position. This reduces the number of position responsibility transfers that are needed.

g. With the alternative approach, when a sector is being transferred to the ISSS control room, personnel first prepare a position in the ISSS control room where the sector is to be opened. They display the necessary FDE's and appropriate situation display. The VSCS is configured to allow sector communication capabilities from the CC and PVD monitoring positions. A transfer of position responsibility briefing is done between the PVD controllers and the CC controllers. The PVD monitoring position monitors this. Once the transfer briefing is completed, a CS message is entered to open the new sector. Message input capability for the sector is set to the CC position. The PVD controllers then handoff the appropriate aircraft to the CC position. VSCS is then configured to allow the CC position primary responsibility for the appropriate frequencies.

83.6.2.4.3 Equipment Outages. Facility procedures are developed for responding to loss of various components of the ISSS and PVD systems during the period from IOC to ORD. These procedures are, by necessity, flexible in outlining the response to each situation. The particular response is dependent on staffing, traffic loads of the sectors involved, and type and expected duration of equipment outages.

a. During the four phases of operational transition described in paragraph 83.6.1, there are three options in responding to the loss of a system component. They are:

(1) Fall Back - transition all operations back to the PVD control room.

(2) Maintain present sector configuration - this would be done with reduced backup capability or in a backup mode (autonomous/DARC).

(3) Fall Forward - transition all ATC operations to CC's.

b. Reduced backup refers to operating without one or more backup systems available. For example, if the standby Host processor was not available, operations would continue on the main Host processor with DARC as the only backup available. Backup mode refers to using a backup system such as autonomous mode for ISSS or DARC for the PVD system.

c. During the first phase of system shakedown, the fall back option is used most often. Proficiency in operation of the new equipment is early in its development. Transition activities are initiated only when all of the ISSS equipment is operational during this phase.

d. After confidence and proficiency in the operation of the new equipment has been established, operations on CC's continue with a reduced backup capability or in a backup mode of operation in the event of a component becoming unavailable. These procedures would be followed during the later stages of Phase 2 and during Phases 3 and 4. For example, if both Host processors became unavailable during Phase 4, operations may continue on CC's using autonomous mode rather than transitioning back to the PVD positions.

e. During the later phases of system shakedown, it is advantageous to fall forward in the event of a component becoming unavailable. Fall forward is the transitioning of all ATC operations to CC's. An example of this is the loss of both Host processors during Phase 3. If only one or two sectors in an area are still operational on PVD's, it is more advantageous to transition the 1 or 2 sectors to CC's rather than move five or six sectors from the CC's back to PVD positions.

f. If an equipment outage occurs that requires autonomous mode on CC's and sectors continue to be operational in both control rooms, interim facility ATC procedures are necessary to provide for the transfer of flight plan information from one control room to the other. This could occur if both Host processors, the LIU's, or multiple LCN components are not available. Flight plan strips are manually prepared by sectors in the PVD control room. These strips are carried to the ISSS control room where FDE's are prepared (could be done at a single data position) and distributed using autonomous mode procedures. Controllers in the ISSS control room manually coordinate flight plans for sectors remaining in the PVD control room.

g. Figure 83-4 presents a summary of equipment outage responses appropriate for each phase of operational transition. Note that many of the

failure conditions for certain shakedown phases may result in one of several site responses. The particular response selected by the site is based in part on traffic levels, confidence in overall system performance, staffing levels, and nature of the equipment outage. The SIP (refer to subparagraph 56.3.11) provides facility details on these procedures. A discussion of the loss of each component is discussed in the following subparagraphs to support figure 83-4.

83.6.2.4.3.1 Host. The loss of a single Host processor results in a reconfiguration of Host processors without loss of service. The backup Host processor becomes the primary processor. This switchover is transparent to ATC sector operations. In the early phases of system shakedown, it may be desirable to return all operations to the PVD control room until the unit is returned to service. In later phases, sector operations continue on CC's with a reduced level of backup. A more complex failure that removes both Host processors from service is handled as follows. This places the CC's into the autonomous operations mode and requires controllers to use DARC. In the early phases of system shakedown (1 and 2), all sectors are transitioned back to the PVD control room. These phases of system shakedown are designed to provide the workforce its initial use of the new system in live ATC operations and to build confidence and proficiency in using the new system. This is initiated only when all components of the ISSS are fully operational. Early in Phase 3, it is advantageous to transfer all sectors back to the PVD control room to simplify operations. In later phases (late 3 and 4), it is desirable to operate in the autonomous mode. In some situations it is advantageous to fall forward. The few sectors remaining in the PVD control room are transitioned to CC's.

83.6.2.4.3.2 Common Console. Within a sector suite, the ISSS will automatically reconfigure available resources to replace resources lost due to equipment failure (refer to subparagraph 30.1.1.3.3.7). During early phases of system shakedown it is recommended that three CC's be used for each sector suite to maximize this availability of resources. If a single CC component became unavailable, the sector functions on the other two until the problem component is restored, or another CC is used for the sector suite. In phase one of system shakedown, it may be desirable to discontinue shakedown activities and return to the PVD control room until the problem is analyzed and resolved. In other phases, shakedown continues using other CC's. If there are failures of a high number of CC's, shakedown activities are discontinued and operations returned to the PVD control room until the problem is analyzed and resolved.

83.6.2.4.3.3 LCN or LIU. A single LCN failure results in a reconfiguration without loss of service. A more complex failure with at least four component failures disables the entire LCN and the system will reconfigure to autonomous mode to continue operations. In the early phases of system shakedown (1 and possibly 2), ATC system shakedown activities are discontinued if there is a loss of a single LCN ring. Shakedown activities do not resume until the problem is analyzed and resolved. In later phases, the loss of a single LCN ring is transparent and shakedown activities continue with reduced backup.

a. The loss of the entire LCN forces a fallback in Phases 1 and 2 of system shakedown. In Phase 3, factors such as the length of the outage, traffic loads, and staffing determine whether ATC operations continue on CC's using autonomous mode, or a fallback to the PVD control room is done. In the later part of Phase 3, it is advantageous to fall forward to consolidate all ATC operations in one control room to simplify procedures and to build proficiency in the use of autonomous mode. In the case of an extended outage during later phases, it may also be advantageous to fallback to use the automated data processing that is available in the PVD control room with the Host.

b. A single LIU failure results in reconfiguration without loss of service. A more complex failure isolates the CC's from the Host and forces autonomous mode. The responses here are the same as for LCN failure(s).

83.6.2.4.3.4 DARC, BCN, ESI, or Radar Data Distribution Unit. A failure within DARC results in a loss of service in the backup source of the surveillance display. The total system availability is reduced even though full service continues. A DARC failure does not directly impact operational shakedown activities but it reduces the overall system availability and increases the operational risk of not having automated support available if another critical system component fails.

a. A single failure within the BCN isolates one device from the network. The device may be an isolated CC or it may be an ESI. If the primary ESI link to BCN fails, the secondary link is used. If both links fail, the ESI is separated from the network and surveillance data from DARC is no longer available. Surveillance data from DARC is not available if there was an outage that removes the RDDU from service.

b. During early phases of system shakedown, it is desirable to terminate ATC system shakedown activities and fall back to the PVD control room until the problem is resolved. In later phases, confidence and proficiency have been developed in the new system and shakedown activities continue with reduced backup.

83.6.2.4.3.5 CDC/DCC. A single failure within the display channel will result in a reconfiguration without loss of service. In the event the recovery process fails to resolve the problem or in more complex failures, the display channel is removed from service and the PVD's use DARC. The sectors on CC's use the autonomous mode in order to access DARC. With a single failure in the first phase of system shakedown, it is desirable to fallback, analyze, and resolve the problem before continuing with ATC operational shakedown activities. During other phases, shakedown activities continue with a reduced backup capability. In the event of a total failure during Phases 1 and 2, all sectors are returned to the PVD control room, when the outage is expected to be long and minimal confidence has been developed in the new equipment. In Phase 3, it is advantageous to fall forward and operate all sectors in the new control room. This alleviates the necessity to be on DARC or autonomous mode. During Phase 4, a total failure simply means that the PVD system is no longer available to use as a backup.

SYSTEM BECOMING UNAVAILABLE	FALL BACK	MAINTAIN SECTOR CONFIG. REDUCED BACKUP	MAINTAIN SECTOR CONFIG. BACKUP SYSTEM	FALL FORWARD
Host				
1 Processor	1,2	2,3,4	N/A	N/A
Both Processors	1,2,3	N/A	3,4	3
Common Console				
Single	1,2	N/A	2,3,4	N/A
Multiple	1,2,3,4	N/A	N/A	N/A
LCN/LIU				
Single	1,2	2,3,4	N/A	N/A
Total	1,2,3	N/A	3,4	3
DARC	1,2	2,3,4	N/A	N/A
BCN/ESI				
Single	1,2	2,3,4	N/A	N/A
Total	1,2	2,3,4	N/A	N/A
CDC/DCC				
Single	1,2	2,3,4	N/A	N/A
Total	1,2	4	3,4	3
Display Generator	1,2	4	N/A	3
Adapter Unit				
Single	1,2	2,3,4	N/A	N/A
Multiple	1,2,3	N/A	3,4	3

N/A - Not applicable or appropriate
Above numbers refer to the phase of shakedown discussed in para 83.6.1

Potential Site Response to Loss of System Components During each Transition Phase
Fig. 83-4

83.6.2.4.3.6 Display Generator (DG). A failure of one DG causes loss of service to a group of one to six PVD's for the primary source of data and the backup source of data. This failure has a significant impact on system shakedown activities. During early phases of system shakedown, any ATC operational shakedown activities are stopped if a DG fails. During the later phases of shakedown, it is desirable to fall forward to the new control room and use CC's for those sectors no longer supported because of the failed DG and associated PVD's.

83.6.2.4.3.7 PAMRI Adapter Unit(AU). The AU is part of the PAMRI and is redundant. A single failure within an AU results in AU reconfiguration without loss of service. Concurrent failures in the primary and backup AU's results in loss of service and may result in a manual cutover to DARC if the AU's involved handle radar data. A loss of a single AU has minimal impact on system shakedown activities. In the early phases (1 and possibly 2), it is desirable to fallback until the problem is analyzed and resolved. In later phases, ATC operational shakedown activities continue with reduced backup capability. With a more complex failure, in the early phases of system shakedown (1 and 2) all sectors are transitioned back to PVD control room. These phases of system shakedown are designed to provide the workforce its first use of the new system with live ATC operations and to begin to develop proficiency. This is accomplished only when all components of the ISSS are fully operational. Early in Phase 3, it is advantageous to fallback and transfer all sectors back to the PVD control room to simplify operations. In later phases (late 3 and 4), it is desirable to operate in the autonomous mode and gain experience and proficiency in its use. In some situations, it is advantageous to fall forward. The few sectors remaining in the PVD control room are transitioned to CC's.

83.7 Joint Acceptance Inspection. Before a new or improved facility or electronic equipment system is accepted for maintenance and operation as a commissioned facility in the NAS, a JAI is held on the system.[184] This

is the culmination of a series of activities detailed in Order 6030.45 that apply. In summary, this includes an investigation and research of records, specific requirements and criteria, as well as the documentation of all inspections, tests, and demonstrations required to assure the FAA that the ISSS adequately meets all the operational, engineering, and maintenance requirements and is ready to be formally placed into operational use or service. This task is described in the following subparagraphs:

83.7.1 Maintaining a Pre-JAI Punch List. The pre-JAI punch list is a management tool that identifies the discrepancies encountered during testing activities. This list is maintained by a designee of the JAI board. The list includes a description of problems and identifies corrective action taken by the contractor before final acceptance of the system by the FAA.[185]

83.7.2 Organizing the Joint Acceptance Board. JAI is accomplished by formation of a board of management personnel knowledgeable about the project. The Airway Facility sector representative designated by the sector manager shall serve as the chairperson. Board members have full authority to determine conditions for facility/equipment/system acceptance and to sign the JAI report for their respective offices. The board is composed of, but not limited to representatives from:[186]

a. Offices responsible for project implementation; e.g., AAP, ASM, etc.

b. Airway Facilities sector manager (or designee).

c. Regional Air Traffic division and the involved facility Air Traffic manager representatives or designees.

d. Representatives of the Aviation Standards Field Office, flight inspection field office, or the regional Flight Standards division, as appropriate.

e. Logistics division representatives.

f. Other representatives of the regional office, national office, and FAA Technical Center, as appropriate.

83.7.3 Determining ISSS Acceptability. The members of the JAI board determine, within their individual program areas, if facility, system, or equipment operation is satisfactory to provide its required service. The ultimate determination that the facility is ready to be commissioned for service is dependent upon the technical performance of the electronic equipment and the attainment of the required operational service. As a part of the JAI, an operational readiness date is determined.[187]

83.7.4 Declaration of ORD. The ORD is the formal declaration that the system meets requirements for full operational use and is ready to be the primary system for ATC.

a. System performance, maintainability, training, spare parts availability, and documentation are among the many items examined during the ORD. A final JAI is conducted by AT and AF managers, other headquarters, and regional personnel as required.

b. ORD is the declaration that the following tasks have been accomplished:

(1) Refinement of operating procedures, methods, adaptation, and parameters.

(2) Adequacy demonstration.

(3) Verification that system, subsystem, software, and equipment documentation is accurate.

(4) Verification that sufficient staffing exists and that personnel are sufficiently trained and familiar with system functions and equipment.

83.7.5 Commissioning. Commissioning is the formal exercise of incorporating the ISSS into the NAS. This ultimate determination that the ISSS is commissioned for service is dependent upon the technical performance of the system and the attainment of the required operational service.[188] The requirements for commissioning the ISSS are as follows.[189]

a. The JAI board determines the conditions of acceptability in accordance with established standards and signs the JAI report for their respective offices.

b. The facility reference data file is established to include all applicable NAS change proposal (NCP) and configuration control document (CCD) technical reference data documentation and reference materials.

c. A change to the FMF is initiated to place the facility in a commissioned status.

83.7.6 Writing the JAI Report. This report is written by the JAI Board to the standard and the format identified by Order 6030.45. This will provide a documented basis for acceptance and commissioning of the facility. These reports are subject to FAA controls under the reports management system as administered by AMS-410. The report is completed prior to or concurrent with the acceptance and commissioning.[190]

83.7.7 Acceptance of Contract Items. Acceptance of contract items is made on FAA Form 256, Inspection Report of Material and/or Services. Acceptance of all freight origin billing (FOB) contract items are accepted at the factory by the quality reliability officer (QRO). Preliminary acceptance of all FOB destination contract items is at the factory by the QRO. Final acceptance of all FOB destination contract items is at the destination after satisfactory completion of all site testing and system shakedown. Final FAA Form 256 is issued by the QRO or his/her designated representative.

84.-89. RESERVED.

CHAPTER 9. INTEGRATED LOGISTICS SUPPORT

90. MAINTENANCE CONCEPT. The AAS maintenance concept ensures maximum availability of the AAS ATC operational hardware and software.[1] Maintenance of the AAS complies with the maintenance philosophy and concept described in Order 6000.27A, Transmittal of Maintenance Philosophy Steering Group (MPSG) Report - 1983 Update; Order 6000.30A, Policy for Maintenance of the National Airspace System (NAS); and Order 6000.15A, General Maintenance Handbook for Airway Facilities.[2] The detailed maintenance concept is provided in appendix D of the NAILS Plan for the AAS. The FAA AAS Integrated Logistics Support Plan is considered as a reference document for the AAS contractor in accomplishing the logistics support functions.[3]

90.1 ISSS Contractor Requirements. The AAS contractor performs the following ILS tasks:[4]

a. The contractor supports a joint Government-contractor NAILSMT. NAILSMT is the primary management vehicle to support the FAA project manager in planning, coordinating, and directing the execution of ILS program.[5]

b. The contractor conducts the LSA program as a single analytical effort with the system engineering process to identify logistic support requirements.[6]

c. The contractor includes as LSA candidates, all items for which the Government does not have an existing documented maintenance capability.[7]

d. The contractor performs an FAA and contractor depot-level maintenance analysis to determine manpower, skills, tooling, and space required for AAS depot support.[8]

e. The contractor identifies the manpower and personnel requirements for all levels of hardware and software maintenance, operator positions, including support systems operators at the FAA Technical Center, and system support for the AAS as part of the LSA process.[9]

f. The contractor plans and completes the tasks required to provision all spare and repair parts to meet the requirements in:
(1) MIL-STD-1388.

(2) FAA-STD-034.

(3) MIL-STD-1561.

90.2 Centralized Control. The maintenance of the ISSS is under centralized control. An automated process for system configuration control is installed at a central location. The distribution of the maintenance workload is controlled, monitored, and coordinated. The workload is distributed in order to optimize the maintenance activity at the central facility and to provide rapid response for modifications and emergency situations. The control is centralized in order to distribute the maintenance workload, standardize site procedures, and present a global approach to site support.[10]

90.3 Equipment Monitoring. Equipment monitoring in the ISSS is accomplished by the M&C subsystem (MCS). The MCS will report and log system malfunctions and advise the maintenance processor subsystem (MPS) about reconfiguration as necessary. The MPS is a part of the remote maintenance monitoring system (RMMS). The MCS constantly monitors the status and performance of the system for alarms or signs of system or subsystem degradation. The MCS interfaces with the RMMS to provide system status/alarm data at the Maintenance Control Center.

90.4 Hardware Maintenance. The hardware design is augmented with maintenance features which make support of the ISSS compatible with the maintenance concept. The maintenance features reduce repair time by providing the technician with the ability to diagnose a malfunction rapidly, identify the failed unit, and replace it quickly.[11] Hardware maintenance is performed at three levels and described in the following subparagraphs.

90.4.1 Onsite Maintenance. Onsite maintenance includes preventive maintenance and corrective maintenance.[12] Onsite maintenance constitutes periodic and corrective actions designed to maintain the ISSS in a fully operational status. This maintenance consists of periodic checks of equipment, monitoring performance, inspection, cleaning, servicing, and adjusting. Onsite maintenance also includes trouble shooting and testing in accordance with equipment manuals, logic diagrams, and manufacturer's handbooks to identify faulty components and to effect replacement with serviceable spares.[13] Technical personnel assigned maintenance responsibility perform corrective and periodic maintenance. This includes use of terminals as troubleshooting aids, conducting physical inspections, calibrating, verifying, and certifying the operating equipment and monitoring devices.[14]

a. The design of the CC and auxiliary display provides for rear replacement of all modules except that handcarried non-auxiliary display modules weighing not over 50 pounds and handcarried auxiliary display modules weighing not over 35 pounds may be front replaceable. Removal and replacement of each module requires less than 5 minutes, except for modules containing the main display surface and rear replace modules containing the auxiliary display surface. When each module is in its maintenance position, all LRU's and test points are accessible. The CC and auxiliary display and each replaceable module remains physically stable when modules are in their maintenance position. Maintenance from the front that contributes only minor additional lighting or noise is permitted. However, only hand carried test equipment items which weigh 50 lbs or less are permitted on control floor aisles. A transportable frame or cart provides for maintenance and transport of ISSS equipment modules between maintenance areas in the building and the maintenance aisles behind the CC's.[15]

b. All equipment, including electronic modules not housed within the CC of a sector suite but remotely located in the equipment room, can be configured and located so that maintenance can be performed on the LRU and access is provided to all test points.[16]

c. All newly developed equipment meets design and maintainability requirements of MIL-STD-1472 unless otherwise specified. The accessibility requirements of FAA-O-2100 apply to all newly developed equipment.[17]

d. All equipment is in accordance with the ground work space design requirements of MIL-STD-1472. Equipment layout provides clear and unrestricted access to any rack or equipment unit including CC's. This permits maintenance or removal of part or all equipment at any rack, unit, or console location. All equipment is maintainable by FAA personnel in accordance with the anthropometric requirements of MIL-STD-1472 and operable according to the human engineering requirements of SLS paragraph 3.2.2.1.9.7.[18]

e. The ISSS design recognizes that maintenance personnel are onsite, since work centers are collocated with the ISSS. In addition, the ISSS M&C console area is the focal point for ISSS maintenance assignments.[19]

90.4.1.1 Periodic and Preventive Maintenance. ISSS periodic maintenance activities do not interfere with normal FAA facility operations. Periodic maintenance task schedules are flexible enough to allow for periodic maintenance to be accomplished in conjunction with corrective maintenance tasks.[20]

90.4.1.2 Corrective Maintenance. Corrective maintenance involves fault isolation to the LRU level, removal and replacement of the faulty LRU, and recertification of the system.[21]

90.4.2 Intermediate Maintenance. An FAA sector level technical support staff activity resolves difficult technical problems, analyzes complex computer performance, and directs the technical efforts of the AAS work force.[22] The intermediate maintenance facility receives the failed LRU and confirms the fault. When the LSA calls for repair at the intermediate level, the repair is performed at this level.[23] The repair of items at the intermediate level is limited. Those items not authorized for repair at the intermediate level are exchanged with a replacement from the FAA Logistics Center.[24] The intermediate maintenance facilities are equipped with limited specialized test equipment and tools, spare parts, and specialized diagnostic hardware and software required for repairing specified LRU's.[25]

90.4.3 FAA Logistics Center Maintenance. The FAA Logistics Center is responsible for the repair of equipment which is not feasible or cost effective to repair at intermediate maintenance locations.[26] Maintenance at the FAA Logistics Center consists of those maintenance and support activities performed on unserviceable, repairable LRU's and system support and test equipment requiring specialized skills and equipment. The tasks performed at the FAA Logistics Center level are those that exceed the capabilities of the intermediate level.[27]

90.5 Software Maintenance. The national field support group (NFSG) analyzes and resolves national and systemwide software problems.[28] The support group located at the FAA Technical Center provides skills necessary to analyze and correct system wide problems as well as assist sector support staffs in diagnosing difficult site problems.[29] The NFSG is made up of the National En Route Field/Maintenance Branch, ATR-450; the National Terminal Field Support/Maintenance Branch, ATR-440; and ASM-400. The NFSG performs software maintenance in the areas of corrective, perfective, and adaptive maintenance.[30]

90.5.1 Onsite Software Maintenance. The ISSS software maintenance is controlled and supported by the SSCC at the FAA Technical Center. ISSS software configuration management is provided by the SSCC. The ISSS supports system recovery servicing. The software maintenance capabilities at the ISSS include building and implementing site specific data bases, identification of software problems, collection of support data, and submission of the problem description and data to the SSCC for resolution. The ISSS is capable of receiving new software versions from the SSCC and of testing, verifying, and validating that the version or modification to existing software meets requirements for operational use. This capability is available for all operational, training, maintenance, and other software items or programs. When directed by the SSCC, the ISSS is capable of modifying object code, and building and implementing data bases in the emergency mode. This code modification does not apply to firmware.[31]

90.5.2 Centralized Software Maintenance. The SSCC is the focal point for ISSS software maintenance. Software maintenance conducted at the SSCC-1 consists of identifying problems, collecting supporting data, and recording and resolving reported problems.[32] The SSCC has the capability of distributing new software versions and their related documentation to operational sites after testing and verification. The SSCC provides the necessary configuration management tools to manage the distributed software versions.[33] Software maintenance activities at the SSCC ensure that the initial release and subsequent updates to ISSS software do not derogate the operational functions or current interfaces of the software being replaced or other systems that interfere with software being replaced at the operational sites.[34]

90.5.3 Software Maintenance Staffing. All facilities are staffed by appropriate numbers of trained automation specialists, supervisors, managers, technicians, and engineers. The staff uses software maintenance tools. These tools build upon the base of tools used in the design, development, and implementation of the delivered software.[35]

90.5.3.1 First Year. The contractor provides software maintenance support for the ARTCC's for the first year. The Government estimated manpower requirement for software maintenance is 8 man-years per site. The contractor also provides engineering services for each ARTCC. The Government estimated manpower requirement for engineering services is 5 man-years per site.[36]

90.5.3.2 Following Years. The contract provides for options to provide a continuing software and engineering support to the ARTCC. The option for staffing levels up to those defined in paragraph 90.5.3.1 is provided. In addition to the ARTCC staffing, the contract provides for FAA Technical Center support in terms of 120 man-years per year of software maintenance support and 12 man-years per year of engineering services support.[37]

90.6 Maintenance Transition. The AAS maintenance philosophy is developed around new technology systems, incorporating digital logic analysis, software control, and remote maintenance monitoring. The role of the electronic technician in the old hardware oriented environment will be changed. The technician becomes a multi-skilled technical specialist. Support of the new AAS technology in the ISSS will require a specialist with both hardware and software skills and a broad range of systems expertise. With the advent of remote maintenance monitoring and centralized field repair, the technical involvement of the maintenance specialist will continue to be one of importance. The AAS will provide a training program to prepare specialists for implementation of the AAS maintenance philosophy. The program will provide training to monitor the system, identify and diagnose failures, certify the system, and control equipment at remote sites. Additional training will be provided to utilize an automated maintenance management system and to accomplish maintenance tasks at onsite, intermediate, and FAA Logistics Center repair facilities.

91. TRAINING. The AAS training program provides transition training for all FAA ATC, AF, and FAA contract personnel who use, operate, maintain, or support the ISSS. The introduction of ISSS has a significant impact on both the controllers and the hardware/software maintenance personnel. The ISSS, with its new CC and man-machine interface, represents the major AAS changes to the controller. Controller training in the use of the new CC and the man-machine interface is required before live ATC operations can be switched from the existing equipment to the ISSS. This training cannot interfere with ongoing ATC operations. Hardware and software maintenance training is required for the ISSS maintenance work force for maintenance that is performed by the Government. The training program for the ISSS is described in the FAA-approved contractor training plan.[38]

91.1 Contractor's Role. The AAS contractor develops all training curricula for the FAA field sites, FAA Technical Center, FAA Academy, FAA Logistics Center, and contractor facilities in accordance with FAA-STD-028, Contract Training Program.[39]

91.2 Methods of Training. Several methodologies are included in the advanced automation training program. These methods provide training that is flexible and efficient.[40]

91.2.1 Advanced Automation Training System. The AATS provides computer-based instruction (CBI) training for both AT and AF personnel. The Government, not the AAS contractor, provides a CBI capability to manage and present academic training. The system provides the capability to accept the results of simulation training for analysis of proficiency.[41] The AATS hardware and software are provided as Government-furnished property to the AAS contractor.[42] Scenarios that address fault isolation, service restoration, system configuration, and technical skill and proficiency development are provided to the sites by way of the AATS.[43]

91.2.2 Detached Console Training. The ISSS CC provides a capability for DCT. The DCT provides realistic training scenarios, progressing from simple practice of new input messages, manipulation of flight data entries, and other basic CHI to fairly demanding scenarios that require rapid input capabilities and ability to recognize and use new data formats. These scenarios use all message formats and all logical display formats that the controller uses in the system he/she is training on; as such it employs conflict situations (e.g., conflict alert, MSAW), but is not intended to be used to teach ATC separation procedures. The CC requires only power and air conditioning in order to provide DCT. DCT provides a series of MMI scenarios. DCT allows MMI training prior to hands-on experience with the operational ISSS.[44]

91.2.3 Dynamic Simulation. ISSS CC's replace the existing DYSIM laboratory PVD's. During the transition from PVD's to CC's, DYSIM labs are available for both types of work stations.[45]

91.2.4 Classroom. Instructor presented courseware is prepared and delivered by the AAS contractor. The AAS contractor provides instructors for the initial classroom courses presented to the FAA instructors and selected system users. Subsequent classroom courses are conducted by the FAA instructors to other system users.

91.2.5 Self-Study Training. Self-study training course material is provided by the AAS contractor and provisions are made for self-study training courses for completion away from the actual control positions.

91.3 Personnel for Training. The training for the ISSS is presented to three basic audiences:

a. Training personnel.

b. AT personnel:

(1) Controllers, includes AT Assistants (ATA).

(2) Traffic management specialists.

(3) Area supervisors.

(4) Area managers.

c. Software maintenance personnel (AT and AF).

d. AF personnel.

These subject areas are presented in the following subparagraphs:

91.3.1 Training Personnel. Classroom instructors are among the initial cadre of FAA personnel trained on the AAS. Training personnel are trained in the subject areas that they instruct on, and administration, instruction, and management of curriculum materials and student records. In addition, some training personnel are trained to author, generate, and modify curriculum materials (traditional, CBI, DCT, and DYSIM).

91.3.2 Controller. The ATC transition training provides controllers with knowledge and skills consistent with the national AT training program in place at the time of implementation of the ISSS.[46] All operational developmental and full performance level (FPL) controllers and an appropriate number of ATA's are trained prior to IOC. Conduct of training is planned for two shift schedules (not planned during the mid-shift). Not more than 10 percent of personnel from operational sectors are in training at one time.[47] All air traffic controller training is conducted onsite.[48] The contractor conducted training program for ATC personnel addresses the use of the following:[49]

a. CC and sector suite.

b. Controller input messages and entry techniques.

c. FDE's.

d. Situation display.

e. Tabular and graphic data on the auxiliary display.

f. Reduction in services.

g. Traffic management unit functions and procedures training.

h. Area supervisor functions.

i. Area manager functions.

91.3.3 Software. The software training provides the necessary knowledge, information, and practical application to effectively maintain the operational software.[50] The abilities of software maintenance course graduates are described in the following subparagraphs.

91.3.3.1 General Course Outcomes. All software course graduates are able to:[51]

a. Differentiate between hardware and software faults.

b. Isolate software faults to defective coding.

c. Correct faults.

d. Restore the system to service.

e. Modify and update software programs.

f. Ensure proper operation of the system in compliance with ATC procedures.

g. Perform adaptive, perfective, and corrective maintenance.

h. Use software maintenance tools and programs.

i. Perform local adaptation.

91.3.3.2 FAA Technical Center Course Outcomes. In addition to the abilities defined in paragraph 91.3.3.1, graduates trained for software work at the FAA Technical Center are able to:[52]

a. Understand the operating systems.

b. Maintain and modify noncommercial software.

c. Use support software modules.

d. Generate and modify documentation.

e. Understand the program design language.

f. Operate consoles.

g. Understand the MMI for the operational system.

91.3.4 Airway Facilities. All initial ISSS AF training is conducted at the FAA Academy.[53] The contractor provides a modular training program. This training provides the hardware and software skills required to maintain the ISSS at all maintenance levels. The training provides the skills to operate the elements, subelements, subsystem, and system of the ISSS.[54] Initial training is primarily lecture and lab. Not more than 25 percent of the AF personnel from a given site are in training at any one time.[55] Instructor and student guides and performance examinations are provided for individual technical certification.[56] During the ISSS phase of the AAS, training is provided in the systems and technologies of data communication, processing software, network concepts and applications, and digital display techniques. Emphasis is placed on maintenance diagnostics and troubleshooting.[57] Graduates of the maintenance training are able to:[58]

a. Perform subsystem, system, and service certification.

b. Perform and document periodic maintenance.

c. Troubleshoot and repair malfunctions.

d. Execute diagnostic tools and analyze results.

e. Operate and monitor the ISSS.

92. SUPPORT TOOLS AND TEST EQUIPMENT. The AAS contractor identifies all required support and test equipment, including common and peculiar tools, jigs, fixtures, and material handling equipment required for performing operational and maintenance tasks at all levels in accordance with MIL-STD-1388.[59] This information is provided to the Government in the LSAR.[60] Software support tools are provided for both onsite and centralized software support.[61] The SAP supplied by the contractor provides a complete list of all special tools and equipment needed to support implementation. The list identifies those items provided by the Government and those items provided by the contractor. Paragraph 57.1.3 provides a complete description of the SAP.

92.1 Simulation Testing. Simulation (SIM) testing is provided in ISSS at the site to verify that new versions of software and adaptation are operating properly. Testing is performed during periods of light traffic permitting some CC and LCN resources to be allocated for testing. If events occur during testing that impose a threat to ATC functions, the tests are abandoned and the resources are

reallocated to ATC functions. The four possible test configurations are defined as follows:

a. Internal HCS Tests. These tests correspond exactly to an existing system test, where the standby Host is dedicated to running the test with direct SIM inputs and SAR outputs.

b. Internal DARC Tests. These tests correspond to existing DARC tests for DARC software or hardware changes. The DARC/Host interface is disabled to prevent DARC input to Host operations. Since internal DARC changes do not change the DARC system interface, the BCN, or CC's, the DARC outputs are viewed on CC's just as they are currently viewed on PVD's.

c. Normal Mode Tests. These tests involve the HCS, LCN, central processor, and related CC functions. ATC operations are moved to autonomous mode for these tests. A subset of CC's together with the BCN and DARC are assigned to ATC operations. Both of the Host processors, the central processors, the LCN, and other CC's are dedicated to these tests.

d. Autonomous Mode Tests. These tests involve DARC, the BCN, and some CC's. ATC operations remain in the normal mode without DARC backup. The HCS/DARC interface is disabled. A subset of CC's, the LCN, the central processors, and the HCS remain in support of ATC operations. DARC, the BCN, and some other CC's are dedicated to testing.

93. SUPPLY SUPPORT. Supply support includes spare parts, consumables, and associated inventories necessary to support all maintenance actions. The FAA Logistics Center determines what bulk items are stocked at sites and at the FAA Logistics Center. Consumables are bulk items such as printer paper, magnetic tape, oil and grease. These items are purchased in large quantities and stocked by the FAA Logistics Center. Spare parts are initially supplied by the AAS contractor.

94. CONTRACTOR DATA AND TECHNICAL MANUALS. The AAS contractor provides all technical data and manuals at each site. The technical manuals are the documents that describe how to install, use and maintain the ISSS system and address all levels of users of that system.

a. Contractor provided manuals. The AAS contractor provides the following manuals as listed in the system level specification:

(1) Installation manuals.

(2) Users manuals.

(3) Computer system operators manuals.

(4) Software program manuals.

(5) Controller manuals.

(6) Supervisor manuals.

(7) Hardware and software technical manuals.

b. Contract Deliverable Requirements List items. The following CDRL items are of interest to site participants and planners.

(1) AT01 - Site activation plan.

(2) AT02 - Site preparation design information package.

(3) AT03 - Site readiness review report.

(4) AT05 - Transition plan.

(5) EN50 - System certification parameters report.

(6) PU01 - Computer system diagnostic manual.

(7) PU02 - Computer system operators manual.

(8) PU05 - Computer firmware manual.

(9) PU08 - Computer hardware manual.

(10) PU09 - Software programmers manual.

(11) PU11 - Software users manual.

(12) TE18 - Master test plan.

(13) TE32 - ISSS test plan.

(14) TE33 - ISSS test procedures.

(15) TE34 - ISSS test report.

(16) TR06 - Training plan {volume for ISSS}, pertinent training materials, and aids.

95. EQUIPMENT REMOVAL. This paragraph provides an overview of the process of identifying, removing, and disposing of NAS equipment that becomes excess/surplus as a result of being replaced by ISSS. After ISSS ORD, a system stability period of up to 30 days is established. Upon completion of the stabilization period the removal and disposition of designated equipment begins. The most cost effective method of removing the M-1 consoles/PVD's from the existing (old) control room and CDC or DCC equipment from the automation wing basement will be used. Sufficient PVD equipment is retained in the inventory to support the off-shore facilities. To assure adequate future support of remaining elements of the CDC system the disposition of CDC and PVD equipment will be coordinated with the FAA Logistics Center. Approval for FAA special disposition authority must be requested from ALG-1. Such approval will be given only after accomplishment of specific preconditions. AAP-240 with the support of the NAS Support Division, ALG-200, will perform the planning for special disposal authority leading to approval of procedures for the removal and disposal of equipment made obsolete by the ISSS. The removal of obsolete NAS equipment is anticipated through the use of a national fixed price contract managed out of headquarters and awarded, at no cost to the Government, to the highest bidder in the same fashion as was done for 9020 A/D computer complex. The bidders are furnished:

a. A statement of work.

b. System removal availability date window per location.

c. List of Airway Facilities sector managers and sector material specialist to contact at each location for material inspection and removal purposes.

d. A list showing model numbers and quantities of each element making up the obsolete system at each location.

e. A short description and plan views of equipment.

f. Location maps for each ARTCC.

g. Contract completion date.

h. Bidding instructions as to price, "no cost to Government" highest bidder.

i. Site visitations for the purpose of examining typical equipment.

95.1 Obsolete Equipment. After the ISSS ORD, commissioning, and a 30-day stabilization period for the first four sites, the obsolete equipment is decommissioned and removed. The time period for the remaining sites may be less than the first four as determined by the facility JAI board.[62] The ISSS implementation planning provides for this removal without modification to the remaining hardware or computer software.[63] The CDC or DCC are removed from the automation wing basement by the salvage contractor. FAA personnel remove all VSCS equipment and signal and power cables from M-1 consoles prior to the salvage contractor's commencement of work. The salvage contractor then removes the remaining obsolete equipment from the old control room. This will include the M-1 consoles complete with all structure and appurtenances and all remaining electronic equipment such as PVD's, Common Logic Units Power Supplies (CLUPS), Common Logic Units (CLU) and Keyboards, Computer Readout Displays (CRD), NRKM, and FSP including FDIO equipment in the automation wing first floor.

95.1.1 Computer Display Channel/Display Channel Complex. There are five CONUS ARTCC sites equipped with DCC. DCC's consist of an IBM 9020 E display channel processor system, and a Raytheon DG and Radar Keyboard Multiplexers (RKM). These ARTCC sites are Chicago, Cleveland, Fort Worth, New York, and Washington, DC. The remaining ARTCC's have Raytheon CDC complexes which are comprised of such items as refresh and buffer memory units, DG's, RKM, NRKM, and Refresh Memory In/Out Controller (RMIOC).

95.1.2 Equipment Removed. The list of equipment to be removed at each ARTCC along with a description and location of the items are furnished as a part of the contract.

95.2 Renovation of M-1 Console and CDC/DCC Equipment Areas. After M-1 consoles have been removed from the old control room and a wall has been erected between the old and new control rooms, Modification Package No. 4 is implemented. Asbestos from above ceiling areas and air conditioning equipment, ceiling, lighting, acoustic wall material,
and power panels are removed. Console cable access holes in the first floor slab are filled and bridged with steel plate. A new ceiling, air conditioning equipment, lighting, acoustic wall treatment, and a raised floor system are installed to complete renovation and support TAAS and ACCC installation. The area vacated by the display

channel equipment in the automation wing basement is renovated for future use.

96. **FACILITIES**. The discussion on facilities is covered in chapter 7, paragraph 71., under site preparation. Please refer to paragraph 71.1.

97.-99. **RESERVED**.

CHAPTER 10. ADDITIONAL PROJECT IMPLEMENTATION ASPECTS

100. ISSS CONFIGURATION MANAGEMENT. The design baseline of the ISSS was established at the completion of the contractually required critical design review. This is the first baseline. After successful completion of the physical configuration audit (PCA), the product baseline is established. Configuration management at the sites consists of controlling the configuration of site systems in relation to established product baseline from the FAA Technical Center acceptance. This process involves managing changes to the ISSS functional and physical characteristics and maintaining/reporting status accounting information using the appropriate support system/tool.[1]

100.1 Site Configuration Management before Acceptance at Last Site. Configuration control of ISSS as it is being deployed to the sites involves coordination of acquisition (AAP) and maintenance organizations (ASM, ATR, etc).

100.1.1 Baseline. The ISSS baseline, controlled after FAA Technical Center acceptance, is the operational baseline, which is the product baseline, as established after successful completion of the ISSS PCA, and any approved changes required for operational use.

100.1.2 Configuration Control Board. The AAP-200 CCB continues to be the cognizant CCB for proposed changes to ISSS until ISSS has been accepted at the last site. AT and AF user organizations are members of the AAP-200 CCB for decisions on ISSS changes. Figure 100-1 illustrates the control of changes during this period. After ISSS has been accepted at the last site, changes are processed as in paragraph 100.2.

100.1.3 Change Requests. Applicable change requests in this period are case files (CF). CF's are processed by the region and pre-screened by ATR-200 for changes to operational ATC software and by ASM-600 for changes to hardware/firmware and ASM-400 maintained software.

Product Baseline Element	CCB	FAA Technical Center & Sites Where Accepted	Factory & Sites Where Not Yet Accepted
Software - ATC Operational	AAP-200	FAA-Initiated: CF->NCP->SPB	FAA-Initiated: CF->NCP->PR->Mod
Firmware/ Hardware	AAP-200	FAA-Initiated: CF->NCP->EEM	FAA-Initiated: CF->NCP->PR->Mod
Software - ASM-600 Maintained Support	AAP-200	FAA-Initiated: CF->NCP->SPB	FAA-Initiated: CF->NCP->PR->Mod

Change Flow After FAA Technical Center Acceptance
Fig. 100-1

After validation by the pre-screening organization, the CF's are submitted to ANS-220 for NCP processing. Changes to specifications identified in the NCP are accomplished via specification change notices (SCN) which are submitted with change pages or change descriptions. After a CF is signed off by the initiating organization, the CF data is entered into the national configuration management status accounting system, documentation and identification control system (DOCCON), either by the sector/facility or at the regional office. CF and NCP processing is described in Order 1800.8 and the AAP-200 Configuration Management Plan.

100.1.4 Change Implementation. For those sites at which ISSS has been accepted, the implementing vehicle for software changes is the site program bulletin (SPB) distributed by ATR-450 for operational ATC software and by ASM-400 for maintenance software. Hardware and firmware changes are distributed by ASM-600 via electronic engineering modifications (EEM). For the not-yet-accepted ISSS's, the implementing vehicle is the contract modification (procurement request) resulting from the NCP approved by the AAP-200 CCB.

100.1.5 Problem Reporting. Software problems continue to be reported using INFO/Problem Management (an IBM product used to document and manage problems for the HCS) on the HCS central support/software development (CS/SD) until ISSS is accepted at each site. After ISSS installation and acceptance, software problems are reported using INFO management on SSCC. Hardware/firmware problems are reported using hard copy hardware discrepancy report (HDR) forms submitted to ASM-400.

100.2 Operational Support Phase Configuration Management. Figure 100-2 depicts the control of changes to the operational support baseline after ISSS has been accepted at the last site.

100.2.1 Baseline. The operational baseline, which is the baseline resulting from the product baseline and the changes made to it for operational purposes, is the baseline which is supported/maintained in the operational support phase after ISSS has been accepted at all sites.

100.2.2 Configuration Control Boards. The operational support phase CCB's responsible for the ISSS configuration items are the AT CCB for ATC operational software and the maintenance engineering (ME) CCB for hardware, firmware, and maintenance software.

100.2.3 Change Requests. Change requests applicable to the operational baseline are CF's/NCP's. They are

Baseline Element	CCB	ACT & All Sites
Software - ATC Operational	AT	CF->NCP->SPB
Firmware/Hardware	ME	CF->NCP->EEM
Software - ASM-600 Maintained Support	ME	CF->NCP->SPB

Change Flow After Acceptance at All Sites
Fig. 100-2

processed by regions and submitted to ATR-200 for pre-screening for ATR-450 maintained software and to ASM-400 for pre-screening for ASM-400 maintained software and for hardware/firmware. After a CF is signed off by the initiating organization, the CF data is entered into the national configuration management status accounting system, DOCCON, either by the sector/facility or at the regional office as specified in Order 1800.8.

100.2.4 **Change Implementation**. The implementing vehicle for a change in the operational support phase is an SPB for software and EEM for hardware/firmware.

100.2.5 **Problem Reporting**. After ISSS has been installed and accepted at a site, software problems are reported using INFO management on the SSCC. Hardware/firmware problems continue to be reported via hard copy HDR forms submitted to ASM-400.

101.-109. **RESERVED**.

APPENDIX 1. FIRST USE OF TERMS, ABBREVIATIONS, AND ACRONYMS

		Page Number
A&M	Aeronautical and Meteorological	3-8
A&R	Alert and Resolution	3-9
AAC	Mike Monroney Aeronautical Center	1-1
AAP	Advanced Automation Program	2-1
AAPO	Advanced Automation Program Office	1-2
AAS	Advanced Automation System	1-1
AASPD	Advanced Automation System Participants Document	5-1
AASTG	Advanced Automation System Training Group	5-4
AATS	AAS Automated Training System	3-10
AC	alternating current	3-20
ACCC	Area Control Computer Complex	2-1
Accept	Acceptance, contraction to fit in the figure	5-2
ACES	Area Control Environment Subsystem	2-3
ACF	Area Control Facility	2-2
ACT	FAA Technical Center	1-1
Admin	Administration, contraction to fit in the figure	5-2
ADM	Auxiliary Display Monitor	3-17
ADTN	Administrative Telecommunications Network	5-5
AF	Airway Facilities	1-2
AIRMET	Airmen's Meteorological Information	3-8
AM	Area Manager	3-21
AMIC	Area Manager-in-Charge	8-26
AMNI	Assistant Manager for NAS Implementation	5-7
AP	Acquisition Phase	1-2
APMT	Associate Program Manager for Test	5-2
ARTCC	Air Route Traffic Control Center	1-1
ARTS	Automated Radar Terminal System	2-1
ARTS IIIA	Model 3A of the Automated Radar Terminal System	2-2
ARRP	ARTCC Resource Requirements Plan	5-15
ASHRAE	American Society of Heating, Refrigerating and Air Conditioning Engineers	3-22
ASIC	Area Supervisor-in-Charge	8-27
AT	Air Traffic	1-2
ATA	Air Traffic Assistant	9-4
ATAASPT	AT AAS Procedures Team	5-3
ATATT	Air Traffic AAS Test Team	5-3
ATC	Air Traffic Control	1-1
ATCT	Airport Traffic Control Tower	2-2
ATIS	Automated Terminal Information System	2-2
AU	Adapter Unit	3-1
AUS	Automation Specialist	3-21
BCN	Backup Channel/Communications Network	3-1
BRE	Back Room Equipment	3-23
BREn(n=A,B,C)	Back Room Equipment located in area A, B, or C	3-23
BTU/Hr.	British Thermal Units per Hour	3-23
CA	Conflict Alert	3-4
CAI	Contractor Acceptance Inspection (also known as Government Acceptance)	4-1
CBI	Computer-Based Instruction	7-4
CC	Common Console	2-4

		Page Number
CCAB	Change Control and Build	2-3
CCB	Configuration Control Board	3-9
CCC	Central Computer Complex	2-5
CCD	configuration control document	8-35
CCP	Common Console Processor	3-1
CCSS	Common Console System Services software configuration item	2-3
CD	Common Digitizer	3-1
CDC	Computer Display Channel	3-25
CDR	Critical Design Review	4-3
CDRL	Contract Deliverable Requirements List	2-3
CED	Computer Entry Device	3-9
cert	certification, contraction to fit in the figure	5-7
CF	Case File	10-1
CFM	Cubic Feet per Minute	3-23
CHI	Computer Human Interface	2-5
CI	Configuration Item	8-4
CIP	Capital Investment Plan	5-8
CLU	Common Logic Unit	9-7
CLUPS	Common Logic Uninterruptible Power Supplies	9-7
CMRS	Calibration/Measurement Requirements Summary	5-13
Cntratr	Contractor	8-1
CM	Configuration Management	2-3
comm.	a contraction of communication to fit in diagram	3-15
contr	a contraction of contractor to fit in diagram	5-3
COTR	Contracting Officer's Technical Representative	5-4
cpl	complete	4-3
CPSD	Cursor Position Selection Device	3-1
CPSS	Central Processor System Services	2-3
CRD	Computer Readout Device	9-7
CS	combine sector, command used to combine or decombine sectors	8-27
CSSE	current sector suite equipment	8-26
CS/SD	Central Support/Software Development	10-1
CSCI	Computer Software Configuration Item	8-4
CTA	Calculated Time of Arrival	3-5
CTS	Coded Time Source	3-25
CTSS	CHI Training Support Software	3-19
CUE	Computer Update Equipment	3-3
D	depth	3-19
DASD	Direct Access Storage Device	3-20
D-BRITE	Digital Bright Radar Indicator Tower Equipment	2-2
D-controller	Sector Controller manning the flight data position	3-10
DARC	Direct Access Radar Channel	2-2
DCC	Display Channel Complex	3-25
DCT	Detached Console Training	3-10
DDF	Development Demonstration Facility	4-2
DEC	Data Entry Control	3-9
DG	Display Generators	8-33
Diag.	diagnostic	3-25
DID	Data Item Description	5-3
DISP	Display Management Software Configuration Item	2-3
Doc	Documentation, a contraction to fit in the figure	5-3
DOCCON	Documentation and Identification Control System	10-1
DR&A	Data Reduction and Analysis	8-20

		Page Number
DRG	Data Receiver Group	2-2
DRPS	Display Recording and Playback System	3-13
DRR	Deployment Readiness Review	5-3
DT&E	Development Test and Evaluation	8-7
DYSIM	Dynamic Simulator or simulation	3-1
E-Complex	Area on the Operations Floor for the Area Manager and the Systems Engineer, formerly the E-desk area	3-19
EDARC	Enhanced Direct Access Radar Channel	2-3
EEM	Electronic Engineering Modifications	10-1
E-Mail	Electronic Mail	5-5
EngSupt	a contraction of Engineering Support to fit in diagram	8-1
ENVT	Environment Data collection	2-3
eq	a contraction of equipment to fit in diagram	3-16
Eq Delivery	Equipment Delivery at the First Site	5-13
ESI	Enhanced-DARC System Interface	3-1
EUPS	Essential Uninterruptible Power System	7-4
EXCOM	executive committee	7-1
F	Fahrenheit	3-22
F&E	Facilities and Equipment	5-6
FAA	Federal Aviation Administration	1-1
FAA.Mail	FAA Wide Electronic Mail System	5-5
FAA-STD	FAA Standard	1-2
FALCON	Trade name assigned by IBM to the processor system used for the central cluster system	3-1
FAT	First Article Testing	8-1
FD	Flight Data	5-15
FDB	Full Data Block	8-30
FDE	Flight Data Entry	3-5
FDEN	Flight Data Entry Notation	3-6
FDIO	Flight Data Input/Output	3-27
FMF	Facilities Master File	8-23
FMT	Failure Mode Test	8-13
FOB	Freight Origin Billing	8-35
FOIG	Facility Operational Impact Group	5-3
FPCL	Flight Plan Communications Link	3-12
FPL	Full Performance Level	9-4
FSP	Flight Strip Printer	3-3
FSQT	Factory System Qualification Test	8-6
ft	Feet	3-18
GFP	Government Furnished Property	3-12
Govt Rev	Government Review	5-13
GPI	General Purpose Input	3-1
GPO	General Purpose Output	3-1
HCS	Host Computer System	2-1
HDR	Hardware Discrepancy Report	10-1
HIU	HCS Interface Unit	3-1
HR	Human resource	5-15
HRIS	Human Resource Impact Statement	5-16
HRMO	Regional Human Resource Management Offices	5-16
HQ	Headquarters	1-1

		Page Number
HVAC	Heating Ventilating and Air Conditioning	3-22
Impl	Implementation, a contraction to fit in the figure	5-3
Incl	Including, a contraction to fit in the figure	5-3
Int	Integrated, a contraction to fit in the figure	5-3
IO or I/O	Input and Output or Input/Output	3-11
I&I	Installation and Integration	8-7
I&T	Integration and Test	8-21
IBM	International Business Machine Corporation	2-1
ICD	Interface Control Document	5-8
IEEE	Institute of Electrical and Electronic Engineers	3-1
IFR	Instrument Flight Rules	3-5
ILS	Integrated Logistics Support	5-10
in.	inch/es	3-16
In.Wg.	Inches of Water Gauge	3-22
Insp	Inspection	4-3
INFO	a support function provided on the HCS	10-1
INTI	Interfacility Input	3-1
INTO	Interfacility Output	3-1
Invlvmt	Involvement	8-1
IOC	Initial Operating Capability	4-1
IRD	Interface Requirements Document	5-8
ISO	International Standards Organization	3-26
ISSS	Initial Sector Suite System	1-1
ISSS.BB	ISSS Bulletin Board	5-5
IWS	Intelligent Work Stations	2-3
JAI	Joint Acceptance Inspection	2-4
KBTU/Hr	Thousands of British Thermal Units per hour	3-23
KPR	Printer associated with the KVDT	3-21
KVA	Kilovolt-Amperes	3-24
KVDT	Keyboard video display terminal	3-9
LAN	Local Area Network	3-3
lb or lbs	Pounds	3-16
lb/sq.	Pounds per Square Foot	3-22
LCN	Local Communications Network	2-5
LIU	LCN Interface Unit	3-1
Locat'n	Location	8-1
Log	Logistics, contraction to fit in the figure	5-3
LRU	Line Replaceable Unit	3-19
LSA	Logistics Support Analysis	5-4
LSAR	Logistics Support Analysis Record	5-4
LSD	Large screen display (part of the MCCP/MMC system)	3-21
M&C	Monitor and Control Console/System	3-1
M1	Model One Equipment Console Rack	4-5
MAC	Months After Contract Award	4-2
Mach	The Speed of Sound	3-5
MAED	Months After Equipment Delivery	4-3
Max	Maximum	3-3
MB	Megabyte	3-17
MBH	Thousand British Thermal Units per Hour	3-23
MCCP/MMC	Maintenance Control Central Processor/Maintenance Monitor Console	3-13

		Page Number
MCS	Monitor and Control Subsystem	9-1
MDC	Main Display Controller	3-17
MDM	Main Display Monitor	3-17
ME	Maintenance Engineering	10-2
mgmt	a contraction of management to fit in diagram	3-4
mgr	a contraction of manager to fit in diagram	3-4
min	Minimum	3-22
MMC	Maintenance Monitor Console	3-21
MMI	Man-Machine Interface	2-5
Mode C	A system that uses data coded into a beacon radar pulse response to interrogation with altimeter data	5
Mode S	A system that uses data coded into a radar pulse and response	3-4
Modernizatio	Modernization, contraction to fit in the figure	5-3
MPED	Months Prior to Equipment Delivery	4-3
MPEDZSE	Months Prior to Equipment Delivery at Seattle Center	4-3
MPS	Maintenance Processor Subsystem	9-1
MPSG	Maintenance Philosophy Steering Group	9-1
MSAU	Multi-Service Access Unit	3-19
MSAW	Minimum Safe Altitude Warning	3-4
MPS	medium speed printer	3-21
MSS	Master Schedule System	5-8
MTP	Master Test Plan	5-9
n	Represents a Variable Number	1-2
NA or N/A	Not Applicable	3-22
NADIN	National Airspace Data Interchange Network	3-27
NAILS	National Airspace Integrated Logistics Support	5-3
NAILSMT	NAILS Management Team	5-3
NAPRS	National Airspace Performance Reporting System	5-12
NARACS	National Radio Communications Network	3-21
NAS	National Airspace System	1-1
NASM	NAS Modernization for ISSS	2-3
NASSR	NAS System Requirements Specification	5-7
NATCA	National Air Traffic Control Association	5-6
NAVAID	Navigational aids	5-2
NC	Noise Coefficient	3-22
NCO	NAS Coordination Office	5-16
NCP	NAS Change Proposal	8-35
NFSG	National Field Support Group	9-2
NIS	NAS Implementation Specialist	5-6
NIT	national implementation team	5-6
NIT&E	NAS integration test and evaluation	8-12
NMCE	Network Management and Control Equipment	3-21
NOPAR	Do Not Pass To Air Defence Command	3-5
no-op'd	No-Op logical device, service is used to cause all future I/O operations involving the specified logical device to be ignored	8-26
NOS	National Ocean Service	3-9
NOTAM	Notice to Airmen	3-8
NRC	Noise Reduction Coefficient	3-22
NRKM	Non-Radar Keyboard Multiplexer	3-27
NTP	NAS Transition Plan	5-9
NVIH	NAS Verification and Implementation Handbook	5-8
OJT	on-the-job-training	5-6
Oper	Operating, contraction to fit in the figure	5-3

		Page Number
OPNL	Operational	3-23
Ops	Operations	3-25
ORD	Operational Readiness Demonstration	2-2
OSC	on-site coordinator	5-6
OSI	Open Systems Interconnect	3-26
OT&E	Operational Test and Evaluation	1-2
PA	Project Authorization	6-2
PASS	Professional Airways System Specialists	5-6
PAM	Peripheral Adapter Module	2-1
PAMRI	Peripheral Adapter Module Replacement Item	2-1
PAT&E	Production Acceptance Test and Evaluation	8-2
PCA	Physical Configuration Audit	10-1
PCB&T	Personnel Compensation Benefits and Travel	6-1
PCS	Power Conditioning System	7-4
PDU	Power Distribution Unit	3-19
PIP	Project Implementation Plan	1-1
PIREP	Pilot Report	3-8
Pln	Plan, contraction to fit in the figure	5-3
PMP	Project Management Plan	5-9
PMR	Program Monthly Review	5-1
PROFS	Professional office system	5-5
PVD	Plan View Display	2-1
Pwr	power	3-18
QRO	Quality Reliability Officer	8-35
Qty	a contraction of quanity to fit in diagram	3-16
QWERTY	Standard Keyboard Layout, top left hand six	3-19
RAAP	Recording Analysis and Playback	2-3
RAM	Random Access Memory	3-17
RAPPI	Random Access Plan Position Indicator	3-21
R-controller	Controller manning the radar data position	3-10
RCE	radio control equipment	7-2
RCM	Radar Control Multiplexer (An interface card added as part of the EDARC modification by IBM)	3-25
R&D	Research and Development	5-2
RDC	Radar Display Channel	3-2
RDDU	Radar Data Distribution Unit (part of the PAMRI system)	3-1
Reqs	Requirements, contraction to fit in the figure	5-3
Req. & Cert.	Requirements and Certification	5-3
Rev Final	Revised Final	5-13
RFP	Request for Proposal	2-2
RKM	Radar Key Multiplexers	9-7
RMA	Reliability/Maintainability/Availability	5-2
RMIOC	Refresh Memory In/Out Controller	9-8
RML	radar microwave link	5-2
RMMS	Remote Maintenance Monitoring System	5-2
RMUX	Radar Multiplexer	2-2
RO	Regional Organization	1-1
R.R.	Readiness Review,contraction to fit in the figure	5-3
RSxxx	Standard radiofrequency signal cable by type (xxx)	3-19
RT	Real Time	3-17

		Page Number
SAP	Site Activation Plan	2-3
SAR	System Analysis Recordings	3-14
SAT	Site Acceptance Test	8-21
SCN	Specification Change Notice	10-1
SCSI	small computer signal/system interface	3-19
SD	support software drop	4-2
SE	Systems Engineer	8-26
SEI	System Engineering and Integration	4-1
SIGMET	Significant Meteorological Information	3-8
SIM	Simulation	9-6
SIP	Site Implementation Plan	1-1
SITE	Site Tailoring	2-3
SLS	System Level Specification	3-9
SOP	Standard Operating Procedures	5-15
SOW	Statement of Work	5-3
SPB	Site Program Bulletin	10-1
SPDIP	Site Preparation Design Information Package	4-1
Spl	a contraction of Special to fit in diagram	3-21
Split	Contraction of 'Splitter' in Modem Splitter so as to fit in figure	3-1
Splitr	Contraction of 'Splitter' in Modem Splitter so as to fit in figure	3-25
Spt	Support, contraction to fit in the figure	5-3
SR	Strip Request	8-30
SRRR	Site Readiness Review Report	5-12
SS	sector suite	3-25
SSCC	System Support Computer Complex	1-2
SSCC-1,2,3,4	System Support Computer Complex phase 1,2,3, or 4	2-1
SSF	System Support Facilities	2-3
SSG	Software Support Group (Contracted to Support the AMA)	5-5
SSRVT	Sector Suite Requirements Verification Team	5-3
SST	Site System Test	8-21
STC	Sound Transmission Class	3-22
S/W	Software	4-4
SWAP	Severe Weather Avoidance Procedure/Program	3-8
SWIT	software integration team	4-2
sys	a contraction of system to fit in diagram	3-16
T&E	test and evaluation	7-1
TAAS	Terminal Advanced Automation System	2-1
TCCC	Terminal Control Computer Complex	2-1
TCS	Tower Communication System	2-1
TD	Test Directive	5-12
TFC	a contraction of traffic to fit in diagram	3-4
TIM	Technical Interchange Meeting	4-1
TM	Traffic Management	3-5
TMDE	Test Measurement and Diagnostic Equipment	5-14
TMU	Traffic Management Unit	3-23
TP	Transition Plan	5-12
TR	Token Ring	3-20
TRACON	Terminal Radar Approach Control	2-1
Trans Plan	ISSS Transition Plan	5-12
TRR	Test Readiness Review	8-21
TRVT	Transition Requirements Verification Team	5-2
UPS	Uninterruptible Power System	7-4

		Page Number
VCE	VSCS Console Equipment	3-1
VDM	VSCS Display Module	3-19
VEM	VSCS Electronics Module	3-19
Verificati	Verification, contraction to fit in the figure	5-3
VFR	Visual Flight Rules	3-4
viewport	any designated portion of a physical display surface	3-3
VIK	VSCS Indirect Access Keypad	3-24
VRTM	Verification Requirements Traceability Matrix	5-9
VSCS	Voice Switching and Control System	2-1
W	a contraction of width to fit in diagram	3-18
Wat	a contraction of watts to fit in diagram	3-18
WECO	Western Electric Company	2-1
WG	Inches of Water, Gauge	3-22
window	a logical display or a portion of a logical display	3-3
wt.	weight	3-18
ZAB	Albuquerque Center	3-23
ZAU	Chicago Center	3-23
ZBW	Boston Center	3-23
ZDC	Washington, DC Center	3-23
ZDV	Denver Center	3-23
ZFW	Fort Worth Center	3-23
ZHU	Houston Center	3-23
ZID	Indianapolis Center	3-23
ZJX	Jacksonville Center	3-23
ZKC	Kansas City Center	3-23
ZLA	Los Angeles Center	3-23
ZLC	Salt Lake City Center	3-23
ZMA	Miami Center	3-23
ZME	Memphis Center	3-23
ZMP	Minneapolis Center	3-23
ZNY	New York Center	3-23
ZOA	Oakland Center	3-23
ZOB	Cleveland Center	3-23
ZSE	Seattle Center	3-23
ZTL	Atlanta Center	3-23

APPENDIX 2. TABLE OF DOCUMENTS, FIRST REFERENCE

Page Number

AAP-200 Configuration Management Plan 10-1
AAS OT&E Program Plan 5-9
AAS System Level Specification, FAA-ER-130-005H-AP, August 28, 1987 1-1
AAS Government-Furnished Property Acquisition Phase, FAA-GFP-130-002, August 28, 1987 7-4
Action Notice 1800.13, Realignment of NAILS Functional Responsibilities 5-10
Advanced Automation System Integrated Logistics Support Plan 5-10
Airman's Information Manual 3-9
ARTCC/ACF Space Requirements Study, June 1987 (ATC-87-1006) 7-4
ARTCC Resource Requirements Plan 7-4
ASHRAE Standard 57-6 3-22
Calibration/Measurement Requirements Summary (CMRS) 5-14
Capital Investment Plan 5-7
Computer System Operators Manual, CDRL PU02 9-6
Computer System Diagnostic Manual, CDRL PU01 9-6
Contractor Interim Reports 5-12
Deployment Reports 5-11
Depot Maintenance Study (CDRL LG02) 6-2
Facility Transition Plan 5-10
FAA AAS Integrated Logistics Support Plan 9-1
FAA Interim Reports 5-12
FAA NAILS Master Plan, SM-88-005 5-6
FAA Technical Center Operations Management Plan 5-7
FAA-STD-020, Transient Protection, Grounding, Bonding and Shielding Requirements for
Equipment 8-19
FAA-STD-028, Department of Transportation Federal Aviation Administration Standard Contract
Training 9-4
FAA-STD-034, Instructions for the Preparation of Logistics Support Analysis (LSA) Data 9-1
Facility Transition Plan 5-9
Final ORD Report 5-11
Final IOC Reports 5-11
IBM SPDIP Data 3-20
IEEE Standard 802.3 3-1
IEEE Standard 802.5 3-1
Initial Operating Capability Reports 5-11
Integrated Logistics Support Plan 5-10
Interface Management Plan 5-7
April 10, 1987 7-1
International Standards Organization (ISO) Communications Protocol Standards 3-26
ISO Open Systems Interconnect (OSI) 3-26
ISSS Test Procedures, CDRL TE33 9-7
ISSS Test Plan, CDRL TE32 9-7
ISSS Project Management Plan 5-9
ISSS Training Plan, CDRL TR06 9-7
ISSS Test Report, CDRL TE34 9-7
Management Reports 5-11
Master Schedule System 5-7
Master Test Plan, CDRL TE18 9-7
Master Test Plan 5-9
MIL-STD-1388, Logistics Support Analysis 9-1
MIL-STD-1472, Human Engineering Design Criteria for Military Systems, Equipment and
Facilities 9-2

Page Number

MIL-STD-1561, Provisioning Procedures, Uniform Department of Defense 9-1
NAILS Master Plan 5-8
NAS Human Resources Plan 5-8
NAS Verification and Implementation Handbook 5-8
NAS Transition Phase System Description 5-6
NAS Integrated Logistics Support Policy 5-6
NAS Verification Plan 5-7
NAS Training Plan 5-8
National Integrated Logistics Support (NAILS) Plan for the Advanced Automation System, Appendix D 9-1
National Airspace System Transition Plan 5-8
National Airspace Integrated Logistics Support (NAILS) Master Plan 5-7
Operational Readiness Demonstration Reports 5-11
Operations Plan for the OT&E of the PAMRI and ISSS at the FAA Training Center 8-12
Order 1320.1C, FAA Directives System 1-2
Order 1800.63, NAS Deployment Readiness Review Program 7-1
Order 1800.8, NAS Configuration Management 10-1
Order 1810.4A, FAA NAS Test & Evaluation System 5-6
Order 4420.4, Space Acquisition 4-5
Order 6020.15A, General Maintenance Handbook for Airway Facilities 9-1
Order 6020.2A, Joint Acceptance Inspections for FAA Facilities 8-21
Order 6000.27A, Transmittal of Maintenance Philosophy Steering Group (MPSG) Report - 1983 Update 9-1
Order 6000.30A, Policy for Maintenance of National Airspace System 9-1
Order 6030.45, Facilities Reference Data File 5-11
Order 6040.15, National Airspace Performance Reporting System (NAPRS) 5-10
Order 6110.6, PAMRI PIP 5-8
Order 7110.65, Air Traffic Control 3-9
Order 7210.3, Operation and Administration 3-9
Order 7610.4, Special Military Operations 3-9
Preparation of Project Implementation Plans, FAA-STD-036 1-2
Preparation of T&E Plans and Procedures, FAA-STD-024 5-7
Problem Reports 5-11
Quality Control System Requirements, FAA-STD-016 8-2
Regional Transition Plan 5-10
Site Activation Plan (SAP) CDRL item number AT01, DID number UDI-AAP-055. 5-12
Site Preparation Design Information Package (SPDIP), CDRL item number AT02,
DID number UDI-AAP-092. 5-12
Site Implementation Plan. 5-10
Site Readiness Review Report (SRRR) CDRL item number AT03, DID number UDI-AAP-093. 5-12
Software Users Manual, CDRL PU11 9-7
Software Programmers Manual, CDRL PU09 9-7
Specification ATC-87-1050, July 1987 3-19
Standard ACF end state equipment layout drawing STD-EL-ES-00 to -12 3-22
Status Reports 5-11
System Certification Parameters Report, CDRL EN50 9-6
Test Readiness and Test Result Reports 5-12
Test Reports 5-12
Training Plan 5-14
Transition Plan (TP), CDRL item number AT05, DID number UDI-AAP-134. 5-12
Transition Concepts and Requirements Document, FAA-TRO-AAP-003 8-19
Voice Switching and Control System Statement of Work, Production Phase, FAA-VSCS-SOW-002,
January 13, 1988 7-4

APPENDIX 3. ENDNOTES

ENDNOTES FOR CHAPTER 1

1. Program Management Plan, DOT/FAA/AP-83/4, November 30, 1984, ADL/300/54.1-010, Paragraph 1.4.5, and Program Master Plan, DOT/FAA/AP-83/3, September 21, 1983, Paragraph 1.6.6.

2. National Airspace System Transition Plan, July 1986, Paragraph 3.0.

3. FAA-STD-036, Preparation of Project Implementation Plans, March 11, 1987, Paragraph 3.2.1.

4. Preparation of Project Implementation Plans, FAA-STD-036, March 11, 1987, Paragraph 3.2.2.

5. AAS System Level Specification, FAA-ER-130-005H-AP, August 28, 1987, Paragraph 20.3.1.2.

ENDNOTES FOR CHAPTER 2

1. AAS System Level Specification, FAA-ER-130-005H-AP, August 28, 1987, par. 20.1.
2. AAS System Level Specification, FAA-ER-130-005H-AP, August 28, 1987, par. 20.3.1.3.
3. Host Computer System Implementation Plan, Revision C, HCS-AP-TMG-02.10, September 8, 1986, par 2.1.
4. Voice Switching and Control System, Product Specification, FAA-E-2713E. June 7, 1991.
5. AAS System Level Specification, FAA-ER-130-005H-AP, August 28, 1987, par. 50.1.
6. AAS System Level Specification, FAA-ER-130-005H-AP, August 28, 1987, par. 20.1.
7. AAS System Level Specification, FAA-ER-130-005H-AP, August 28, 1987, par. 3.7.2.
8. AAS System Level Specification, FAA-ER-130-005H-AP, August 28, 1987, par. 3.7.2.
9. AAS System Level Specification, FAA-ER-130-005H-AP, August 28, 1987, par. 3.7.2.
10. AAS System Level Specification, FAA-ER-130-005H-AP, August 28, 1987, par. 40.1.
11. AAS System Level Specification, FAA-ER-130-005H-AP, August 28, 1987, par. 40.3.1.
12. AAS System Level Specification, FAA-ER-130-005H-AP, August 28, 1987, par. 3.1.4.1.
13. AAS System Level Specification, FAA-ER-130-005H-AP, August 28, 1987, par. 3.7.1.1.
14. AAS System Level Specification, FAA-ER-130-005H-AP, August 28, 1987, par. 3.7.1.2.
15. AAS System Level Specification, FAA-ER-130-005H-AP, August 28, 1987, par. 3.7.1.3.
16. AAS System Level Specification, FAA-ER-130-005H-AP, August 28, 1987, par. 3.7.1.4.
17. AAS System Level Specification, FAA-ER-130-005H-AP, August 28, 1987, par. 3.7.1.5.
18. AAS System Level Specification, FAA-ER-130-005H-AP, August 28, 1987, par. 3.7.1.6.
19. AAS System Level Specification, FAA-ER-130-005H-AP, August 28, 1987, par. 3.7.3.
20. Advanced Automation System Transition Concepts and Requirements, FAA-TRO-AAP-003, August 28, 1987, provides the description of the backup capability requirements.
21. AAS System Level Specification, FAA-ER-130-005H-AP, August 28, 1987, par. 3.7.3.1.
22. AAS System Level Specification, FAA-ER-130-005H-AP, August 28, 1987, par. 20.3.1.1.
23. National Airspace System Plan, April 1987, Section III, Project 12, Approach, par. 3.
24. AAS Statement of Work Acquisition Phase, FAA-SOW-240-002, August 28, 1987, par. 3.12.2.1.1.
25. AAS System Level Specification, FAA-ER-130-005H-AP, August 28, 1987, par. 20.3.1.3.
26. AAS System Level Specification, FAA-ER-130-005H-AP, August 28, 1987, par. 20.3.1.1.
27. AAS System Level Specification, FAA-ER-130-005H-AP, August 28, 1987, par. 20.1.
28. National Airspace System Plan, April 1987, Executive Summary.

ENDNOTES FOR CHAPTER 3

1. AAS System Level Specification, FAA-ER-130-005H-AP, August 28, 1987, par. 20.1.

2. AAS System Level Specification, FAA-ER-130-005H-AP, August 28, 1987, par. 20.3.1.1.

3. AAS System Level Specification, FAA-ER-130-005H-AP, August 28, 1987, par. 20.1.

4. AAS System Level Specification, FAA-ER-130-005H-AP, August 28, 1987, par. 20.3.1.1.

5. AAS System Level Specification, FAA-ER-130-005H-AP, August 28, 1987, par. 3.2.2.1.9.1.

6. AAS System Level Specification, FAA-ER-130-005H-AP, August 28, 1987, SCN 013, March 11, 1988, Table 3.7-8 by way of par. 3.7.1.2.2 by way of 3.7.1.2.3 by way of 20.3.7.1.2.4.

7. Advanced Automation System, System Level Specification, FAA-ER-130-005H-AP, August 28, 1988, SCN 013, March 11, 1988, par. 3.7.1.2.1.1 by way of par. 20.3.7.1.2.1.

8. Advanced Automation System, System Level Specification, FAA-ER-130-005H-AP, August 28, 1988, SCN 013, March 11, 1988, par. 3.7.1.2.1.1.1 by way of par. 20.3.7.1.2.1.1.

9. Advanced Automation System, System Level Specification, FAA-ER-130-005H-AP, August 28, 1988, SCN 013, March 11, 1988, par. 3.7.1.2.1.1.1.1 by way of par. 20.3.7.1.2.1.1.

10. Advanced Automation System, System Level Specification, FAA-ER-130-005H-AP, August 28, 1988, SCN 013, March 11, 1988, par. 3.7.1.2.1.1.1.3 by way of par. 20.3.7.1.2.1.1.

11. Advanced Automation System, System Level Specification, FAA-ER-130-005H-AP, August 28, 1988, SCN 013, March 11, 1988, par. 3.7.1.2.1.1.1.3 second and third imbedded lists, by way of par. 20.3.7.1.2.1.1.

12. Advanced Automation System, System Level Specification, FAA-ER-130-005H-AP, August 28, 1988, SCN 013, March 11, 1988, par. 3.7.1.2.1.1.1.3.c by way of par. 20.3.7.1.2.1.1.

13. Advanced Automation System, System Level Specification, FAA-ER-130-005H-AP, August 28, 1988, SCN 013, March 11, 1988, par. 3.7.1.2.1.1.1.3.e by way of par. 20.3.7.1.2.1.1.

14. Advanced Automation System, System Level Specification, FAA-ER-130-005H-AP, August 28, 1988, SCN 013, March 11, 1988, par. 3.7.1.2.1.1.1.4 by way of par. 20.3.7.1.2.1.1.

15. Advanced Automation System, System Level Specification, FAA-ER-130-005H-AP, August 28, 1988, SCN 013, March 11, 1988, par. 3.7.1.2.1.1.1.11 by way of par. 20.3.7.1.2.1.1.

16. Advanced Automation System, System Level Specification, FAA-ER-130-005H-AP, August 28, 1988, SCN 013, March 11, 1988, par. 3.7.1.2.1.1.1.13 by way of par. 20.3.7.1.2.1.1.

17. Advanced Automation System, System Level Specification, FAA-ER-130-005H-AP, August 28, 1988, SCN 013, March 11, 1988, par. 3.7.1.2.1.1.1.15 by way of par. 20.3.7.1.2.1.1.

18. Advanced Automation System, System Level Specification, FAA-ER-130-005H-AP, August 28, 1988, SCN 013, March 11, 1988, par. 20.3.7.1.2.1.1.f.

19. Advanced Automation System, System Level Specification, FAA-ER-130-005H-AP, including amendments 1-5, par. 3.7.1.2.1.1.2 by way of par. 20.3.7.1.2.1.2.

20. Advanced Automation System, System Level Specification, FAA-ER-130-005H-AP, including amendments 1-5, par. 3.7.1.2.1.1.2.f by way of par. 20.3.7.1.2.1.2.

21. Advanced Automation System, System Level Specification, FAA-ER-130-005H-AP, August 28, 1988, SCN 013, March 11, 1988, par. 3.7.1.2.1.1.2.a by way of par. 20.3.7.1.2.1.2.

22. Advanced Automation System, System Level Specification, FAA-ER-130-005H-AP, August 28, 1988, SCN 013, March 11, 1988, par. 3.7.1.2.1.1.2.a by way of par. 20.3.7.1.2.1.2.

23. Advanced Automation System, System Level Specification, FAA-ER-130-005H-AP, August 28, 1988, SCN 013, March 11, 1988, par. 3.7.1.2.1.1.2.b by way of par. 20.3.7.1.2.1.2.

24. Advanced Automation System, System Level Specification, FAA-ER-130-005H-AP, August 28, 1988, SCN 013, March 11, 1988, par. 3.7.1.2.1.1.2.d by way of par. 20.3.7.1.2.1.2.

25. Advanced Automation System, System Level Specification, FAA-ER-130-005H-AP, August 28, 1988, SCN 013, March 11, 1988, par. 3.7.1.2.1.1.2.e by way of par. 20.3.7.1.2.1.2.

26. Advanced Automation System, System Level Specification, FAA-ER-130-005H-AP, August 28, 1988, SCN 013, March 11, 1988, par. 3.7.1.2.1.1.2.c by way of par. 20.3.7.1.2.1.2.

27. Advanced Automation System, System Level Specification, FAA-ER-130-005H-AP, including amendments 1-5, par. 3.7.1.2.1.1.2.1 by way of par. 20.3.7.1.2.1.2.

28. AAS System Level Specification, FAA-ER-130-005H-AP, August 28, 1987, par. 20.3.7.1.2.1.2.d.

29. Advanced Automation System, System Level Specification, FAA-ER-130-005H-AP, including amendments 1-5, par. 3.7.1.2.1.1.3 by way of par. 20.3.7.1.2.1.3.

30. Advanced Automation System, System Level Specification, FAA-ER-130-005H-AP, including amendments 1-5, par. 20.3.7.1.2.1.5.

31. Advanced Automation System, System Level Specification, FAA-ER-130-005H-AP, including amendments 1-5, par. 3.7.1.2.1.1.5.4 by way of par. 20.3.7.1.2.1.5.

32. Advanced Automation System, System Level Specification, FAA-ER-130-005H-AP, including amendments 1-5, par. 3.7.1.2.1.1.6 by way of par. 20.3.7.1.2.1.6.

33. Advanced Automation System, System Level Specification, FAA-ER-130-005H-AP, including amendments 1-5, par. 3.7.1.2.1.1.9 by way of par. 20.3.7.1.2.1.7.

34. Advanced Automation System, System Level Specification, FAA-ER-130-005H-AP, August 28, 1988, SCN 013, March 11, 1988, par. 3.7.1.2.1.1.21 except ATC mail is not included, by way of par. 20.3.7.1.2.1.12.

35. Advanced Automation System, System Level Specification, FAA-ER-130-005H-AP, August 28, 1988, SCN 013, March 11, 1988, par. 3.7.1.2.1.1.21 except that special lists are as defined in par. 20.3.7.1.2.1.5 by way of par. 20.3.7.1.2.1.13.

36. Advanced Automation System, System Level Specification, FAA-ER-130-005H-AP, August 28, 1988, SCN 013, March 11, 1988, par. 20.3.7.1.2.1.4.

37. Advanced Automation System, System Level Specification, FAA-ER-130-005H-AP, August 28, 1988, SCN 013, March 11, 1988, par. 20.3.7.1.2.1.8.

38. AAS System Level Specification, FAA-ER-130-005H-AP, August 28, 1987, par. 3.7.1.2.1.1.13.1/3 and 20.3.7.1.2.1.9.

39. AAS System Level Specification, FAA-ER-130-005H-AP, August 28, 1987, SCN 013, March 11, 1988, par. 20.3.7.1.2.2.1.

40. Advanced Automation System, System Level Specification, FAA-ER-130-005H-AP, August 28, 1988, SCN 013, March 11, 1988, par. 20.3.7.1.2.2.2.

41. Advanced Automation System, System Level Specification, FAA-ER-130-005H-AP, August 28, 1988, SCN 013, March 11, 1988, par. 3.7.1.5.2.4 by way of par. 20.3.7.1.2.2.3.

42. Advanced Automation System, System Level Specification, FAA-ER-130-005H-AP, August 28, 1988, SCN 013, March 11, 1988, par. 20.3.7.1.2.2.3.

43. Advanced Automation System, System Level Specification, FAA-ER-130-005H-AP, August 28, 1988, SCN 013, March 11, 1988, par. 20.3.7.1.2.3.1.

44. Advanced Automation System, System Level Specification, FAA-ER-130-005H-AP, August 28, 1988, SCN 013, March 11, 1988, par. 20.3.7.1.2.3.2.

45. AAS System Level Specification, FAA-ER-130-005H-AP, August 28, 1987, par. 3.7.1.1.1.1 by way of par. 20.3.7.1.1.1.

46. AAS System Level Specification, FAA-ER-130-005H-AP, August 28, 1987, par. 3.7.1.1.1.1.1 by way of par. 20.3.7.1.1.1.

47. AAS System Level Specification, FAA-ER-130-005H-AP, August 28, 1987, par. 3.7.1.1.1.1.2 by way of par. 20.3.7.1.1.1.

48. AAS System Level Specification, FAA-ER-130-005H-AP, August 28, 1987, par. 3.7.1.1.1.1.3 by way of par. 20.3.7.1.1.1.1.

49. The Timing requirements are stated in par 3.2.1.1 of the SLS.

50. AAS System Level Specification, FAA-ER-130-005H-AP, August 28, 1987, par. 3.7.1.1.1.1.4 by way of par. 20.3.7.1.1.1.

51. AAS System Level Specification, FAA-ER-130-005H-AP, August 28, 1987, par. 3.7.1.1.1.2.1 by way of par. 20.3.7.1.1.2.

52. AAS System Level Specification, FAA-ER-130-005H-AP, August 28, 1987, par. 3.7.1.1.1.2.2 by way of par. 20.3.7.1.1.2.

53. AAS System Level Specification, FAA-ER-130-005H-AP, August 28, 1987, par. 20.3.7.1.1.3.

54. AAS System Level Specification, FAA-ER-130-005H-AP, August 28, 1987, par. 20.3.1.1.

55. AAS System Level Specification, FAA-ER-130-005H-AP, August 28, 1987, par. 20.3.7.1.1.3.1.

56. AAS System Level Specification, FAA-ER-130-005H-AP, August 28, 1987, par. 20.3.1.3, 4th subparagraph.

57. AAS System Level Specification, FAA-ER-130-005H-AP, August 28, 1987, par. 20.3.1.1.

58. AAS System Level Specification, FAA-ER-130-005H-AP, August 28, 1987, par. 20.3.7.1.1.3.3.

59. AAS System Level Specification, FAA-ER-130-005H-AP, August 28, 1987, par. 20.3.7.1.1.3.4.

60. AAS System Level Specification, FAA-ER-130-005H-AP, August 28, 1987, par. 20.3.7.1.1.3.5.

61. AAS System Level Specification, FAA-ER-130-005H-AP, August 28, 1987, par. 20.3.7.1.1.3.6.

62. AAS System Level Specification, FAA-ER-130-005H-AP, August 28, 1987, par. 20.3.7.1.1.3.7.

63. AAS System Level Specification, FAA-ER-130-005H-AP, August 28, 1987, par. 20.3.7.1.1.3.9.

64. AAS System Level Specification, FAA-ER-130-005H-AP, August 28, 1987, par. 20.3.7.1.1.3.9.

65. AAS System Level Specification, FAA-ER-130-005H-AP, August 28, 1987, par. 3.7.1.1.1.3.7 by way of par. 20.3.7.1.1.3.10.

66. AAS System Level Specification, FAA-ER-130-005H-AP, August 28, 1987, par. 3.7.1.1.1.3.8.

67. AAS System Level Specification, FAA-ER-130-005H-AP, August 28, 1987, par. 20.3.7.1.1.3.12.

68. AAS System Level Specification, FAA-ER-130-005H-AP, August 28, 1987, par. 20.3.7.1.2.2.2.

69. AAS System Level Specification, FAA-ER-130-005H-AP, August 28, 1987, par. 20.3.7.1.1.3.13, 4th subparagraph.

70. AAS System Level Specification, FAA-ER-130-005H-AP, August 28, 1987, par. 20.3.7.1.1.3.13.

71. AAS System Level Specification, FAA-ER-130-005H-AP, August 28, 1987, par. 20.3.7.1.1.3.14.

72. Advanced Automation System, System Level Specification, FAA-ER-130-005H-AP, par 3.7.1.1.1.4, by way of par. 20.3.7.1.1.4.

73. Advanced Automation System, System Level Specification, FAA-ER-130-005H-AP, par. 3.7.1.1.2 by way of par. 20.3.7.1.1.5.

74. Advanced Automation System, System Level Specification, FAA-ER-130-005H-AP, par. 3.7.1.1.3.7.3 by way of par. 20.3.7.1.1.6.

75. Advanced Automation System, System Level Specification, FAA-ER-130-005H-AP, par. 3.7.1.1.3.7.5 by way of par. 20.3.7.1.1.7.

76. Advanced Automation System, System Level Specification, FAA-ER-130-005H-AP, August 28, 1988, SCN 013, March 11, 1988, par. 3.7.1.2.4 by way of par. 20.3.7.1.3.

77. AAS System Level Specification, FAA-ER-130-005H-AP, August 28, 1987, par. 20.3.7.1.1.3.2.

78. AAS System Level Specification, FAA-ER-130-005H-AP, August 28, 1987, par. 20.3.7.1.1.3.2.

79. AAS System Level Specification, FAA-ER-130-005H-AP, August 28, 1987, par. 20.3.7.1.1.3.2.

80. AAS System Level Specification, FAA-ER-130-005H-AP, August 28, 1987, par. 20.3.7.1.1.3.13 by way of par. 20.3.7.1.1.3.2.

81. Based upon information provided in CDRL AT02, Site Preparation Design Information Package.

82. IRD, NAS-IR-21014201, paragraph 3.3.1.5.

83. AAS System Level Specification, FAA-ER-130-005H-AP, with all post contract award amendments, paragraph 3.7.1.2.3.1.4.

84. Specification ATC-87-1050, July, 1987.

85. IBM SPDIP data.

86. AAS System Level Specification, FAA-ER-130-005H-AP, August 28, 1987, par. 3.2.2.1.2, and par. 3.2.2.1.9.7.9.

87. AAS System Level Specification, FAA-ER-130-005H-AP, August 28, 1987, par. 3.2.2.1.9.2.1.

88. AAS System Level Specification, FAA-ER-130-005H-AP, August 28, 1987, par. 3.2.2.1.9.2.1.1.

89. AAS System Level Specification, FAA-ER-130-005H-AP, August 28, 1987, par. 2.3.2.1.9.2.1.5.

90. AAS System Level Specification, FAA-ER-130-005H-AP, August 28, 1987, par. 3.2.2.1.9.2.1.5.

91. AAS System Level Specification, FAA-ER-130-005H-AP, August 28, 1987, par. 3.2.2.1.9.2.1.3.

92. AAS System Level Specification, FAA-ER-130-005H-AP, August 28, 1987, par. 3.2.2.1.9.2.1.4.

93. AAS System Level Specification, FAA-ER-130-005H-AP, August 28, 1987, par. 3.2.2.1.9.2.1.6.

94. AAS System Level Specification, FAA-ER-130-005H-AP, August 28, 1987, par. 3.2.2.1.9.2.1.7.

95. AAS System Level Specification, FAA-ER-130-005H-AP, August 28, 1987, par. 3.2.2.1.9.2.1.8.

96. AAS System Level Specification, FAA-ER-130-005H-AP, August 28, 1987, para. 3.7.1.2.3.1.4.

97. AAS System Level Specification, FAA-ER-130-005H-AP, August 28, 1987, par. 10.1.2.

98. AAS System Level Specification, FAA-ER-130-005H-AP, August 28, 1987, par. 10.1.2.

99. AAS System Level Specification, FAA-ER-130-005H-AP, August 28, 1987, par. 10.1.2.

100. AAS System Level Specification, FAA-ER-130-005H-AP, August 28, 1987, par. 10.1.2.

ENDNOTES FOR CHAPTER 4

1. AAS Contract Data Requirements List (CDRL), FAA-CDRL-240-002, CDRL item AT02, Data Item Description (DID) number UDI-AAP-092.

2. AAS Contract Data Requirements List (CDRL), FAA-CDRL-240-002, CDRL item AT01, DID number UDI-AAP-055.

3. AAS, Request for Proposal Acquisition Phase, August 28, 1987, Section F, Table F.1.

ENDNOTES FOR CHAPTER 5

1. Advanced Automation System Participants Document (AASPD), This document identifies current point of contact for various team memebers and is published periodically by AAP-240.

2. National Airspace Integrated Logistics Support (NAILS) Master Plan, March 1987, par. 19.

3. ADL-1 letter of December 3, 1987, on FAA-Wide Electronic Mail System.

4. National Airspace Transition Plan, Volume I, December 1986, Executive Summary.

5. FAA-STD-036, Preparation of Project Implementation Plans, March 11, 1987, Appendix I.

6. AAS ISSS Branch Management Plan Number AAS-AP-ISSS-01 dated July 25, 1988.

7. FAA-STD-024a, Preparation of Test and Evaluation Plans and Test Procedures, September 10, 1986, Appendix I, 10.3.1.

8. FAA-STD-024a (Draft) Preparation of Test and Evaluation Plans and Test Procedures, September 10, 1986, Appendix I, 10.3.1.

9. FAA-STD-024a (Draft) Preparation of Test and Evaluation Plans and Test Procedures, September 10, 1986, Appendix I, 10.3.1.

10. FAA-STD-024a (Draft) Preparation of Test and Evaluation Plans and Test Procedures, September 10, 1986, Appendix I, 10.3.1.

11. FAA-STD-024a (Draft) Preparation of Test and Evaluation Plans and Test Procedures, September 10, 1986, Appendix I, 10.3.1.

12. FAA-STD-024a (Draft) Preparation of Test and Evaluation Plans and Test Procedures, September 10, 1986, Appendix I, 10.3.1.

13. AAS System Level Specification, FAA-ER-130-005H-AP, August 28, 1987, Paragraph Number, 4.2.1, second subparagraph.

14. FAA-STD-024a, Preparation of Test and Evaluation Plans and Test Procedures, September 10, 1986, Appendix IV.

15. Program Plan for Formal OT&E at the FAA Technical Center for the Advanced Automation System, July 21, 1989, par. 1.3, 1.4. and 2.1.

16. Advanced Automation System Integrated Logistics Support Plan, December 1987, par. 2.0.

17. Advanced Automation System Integrated Logistics Support Plan, December 1987, par. 3.0.

18. Advanced Automation System Integrated Logistics Support Plan, December 1987, par. 4.0.

19. Advanced Automation System Integrated Logistics Support Plan, December 1987, par. 5.0.

20. Advanced Automation System Integrated Logistics Support Plan, December 1987, par. 6.0.

21. Advanced Automation System Integrated Logistics Support Plan, December 1987, par. 7.0.

22. Advanced Automation System Integrated Logistics Support Plan, December 1987, par. 8.0.

23. Advanced Automation System Integrated Logistics Support Plan, December 1987, par. 9.0.

24. Advanced Automation System Integrated Logistics Support Plan, December 1987, par. 9.0.

25. Advanced Automation System Integrated Logistics Support Plan, December 1987, Appendix C.

26. Advanced Automation System Integrated Logistics Support Plan, December 1987, Appendix D.

27. National Airspace Transition Plan, Volume I, December 1986, par. 4.2.2.

28. National Airspace Transition Plan, Volume I, December 1986, par. 4.2.3.

29. AAS Data Item Description Acquisition Phase, FAA-DID-240-002, August 28, 1987, UDI-AAP-093, CDRL Item Number AT03.

30. AAS Data Item Description Acquisition Phase, FAA-DID-240-002, August 28, 1987, DI-S-6177B, CDRL Item Number LG01.

31. This paragraph was contributed by the AT TRVT May 1989.

ENDNOTES FOR CHAPTER 6

1. Project implementation funding is the responsibility of the Program Manager for Advanced Automation.

2. AAS Contract, Acquisition Phase, DTFAO1-88-C-00042, Support Services, June 14, 1988, par. B.2.2.

3. AAS Contract, Acquisition Phase, DTFAO1-88-C-00042, Support Services, June 14, 1988, Training Services, par. B.20.1.

4. AAS Contract, Acquisition Phase, DTFAO1-88-C-00042, Support Services, June 14, 1988, Consumables, par. B.24.1.

5. AAS Contract, Acquisition Phase, DTFAO1-88-C-00042, Support Services, June 14, 1988, Logistics, par. B.28.1.

6. AAS Contract, Acquisition Phase, DTFAO1-88-C-00042, Support Services, June 14, 1988, Spares, par. B.28.2.

ENDNOTES FOR CHAPTER 7

1. Order 1800.63, NAS Deployment Readiness Review Program, Appendix 1.
2. Order 1800.63, NAS Deployment Readiness Review Program, par. 5.B.1.
3. Order 1800.63, NAS Deployment Readiness Review Program, Appendix 2.
4. AAS Data Item Description Acquisition Phase, FAA-DID-240-002, August 28, 1987, UDI-AAP-055.
5. AAS Data Item Description Acquisition Phase, FAA-DID-240-002, August 28, 1987, UDI-AAP-093.
6. AAS Government-Furnished Property Acquisition Phase, FAA-GFP-130-002, August 28, 1987, par. 5.3.1.
7. AAS Government-Furnished Property Acquisition Phase, FAA-GFP-130-002, August 28, 1987, par. 5.3.
8. AAS, Request for Proposal Acquisition Phase, August 28, 1987, Section F, Table F.1.

ENDNOTES FOR CHAPTER 8

1. FAA-240-002 AAS Statement of Work with DCN 005, May 25, 1988, par. 3.6.3, and DTFA01-88-C-00042 AAS Contract, Acquisition Phase, June 14, 1988, Line Item B.2.2.

2. FAA-240-002 AAS Statement of Work with DCN 005, May 25, 1988, par. 3.6.3.2, and DTFA01-88-C-00042 AAS Contract, Acquisition Phase, June 14, 1988, Line Item B.100.

3. FAA-240-002 AAS Statement of Work with DCN 005 May 25, 1988, par. 3.6.3, and DTFA01-88-C-00042 AAS Contract, Acquisition Phase, June 14, 1988, Line Item B.2.2.

4. AAS Statement of Work Acquisition Phase, FAA-SOW-240-002, August 28, 1987, par. 3.6.2.

5. AAS Statement of Work Acquisition Phase, FAA-SOW-240-002, August 28, 1987, par. 3.6.6.

6. AAS Statement of Work Acquisition Phase, FAA-SOW-240-002, August 28, 1987, par. 3.6.

7. AAS Statement of Work Acquisition Phase, FAA-SOW-240-002, August 28, 1987, par. 3.6.4 and SLS 4.4.3.

8. AAS System Level Specification, FAA-ER-130-005H-AP, August 28, 1987, par. 4.4.3.

9. AAS System Level Specification, FAA-ER-130-005H-AP, August 28, 1987, par. 4.4.3.

10. AAS Statement of Work Acquisition Phase, FAA-SOW-240-002, August 28, 1987, par. 3.6.3.1.1.

11. AAS System Level Specification, FAA-ER-130-005H-AP, August 28, 1987, par. 4.4.1.1.2.1., rewrite comment from SCT.

12. AAS System Level Specification, FAA-ER-130-005H-AP, August 28, 1987, par. 4.4.1.1.2.1., rewrite comment from SCT.

13. AAS System Level Specification, FAA-ER-130-005H-AP, August 28, 1987, par. 4.4.1.1.2.1., rewrite comment from SCT.

14. AAS System Level Specification, FAA-ER-130-005H-AP, August 28, 1987, par. 4.4.1.1.2.1., rewrite comment from SCT.

15. AAS System Level Specification, FAA-ER-130-005H-AP, August 28, 1987, par. 4.4.1.1.2.1., rewrite comment from SCT.

16. AAS System Level Specification, FAA-ER-130-005H-AP, August 28, 1987, par. 20.3.7.1.2 by way of 4.4.1.2.1.2 by way of SOW 3.6.3.1.2.

17. AAS System Level Specification, FAA-ER-130-005H-AP, August 28, 1987, par. 3.7.1.2.3 by way of 20.3.7.1.2.4 by way of 4.4.1.2.1.2 by way of 4.4.1.2.1 by way of SOW 3.6.3.1.2. The material called for in this test repeats the material called in the MMI test. See paragraph 80.3.1.1, h.

18. AAS System Level Specification, FAA-ER-130-005H-AP, August 28, 1987, par. 20.3.2, Table 20.3-1, by way of 4.4.1.2.1.3 by way of SOW 3.6.3.1.2.

19. AAS System Level Specification, FAA-ER-130-005H-AP, August 28, 1987, par. 20.3.2, Table 20.3-2, by way of 4.4.1.2.1.3 by way of SOW 3.6.3.1.2.

20. AAS System Level Specification, FAA-ER-130-005H-AP, August 28, 1987, par. 20.3.2, Table 20.3-3, by way of 4.4.1.2.1.3 by way of SOW 3.6.3.1.2.

21. AAS System Level Specification, FAA-ER-130-005H-AP, August 28, 1987, par. 4.4.1.2.1.3.

22. AAS System Level Specification, FAA-ER-130-005H-AP, August 28, 1987, par. 4.4.1.2.1.4.1 by way of 4.4.1.2.1 by way of SOW 3.5.3.1.2.

23. AAS System Level Specification, FAA-ER-130-005H-AP, August 28, 1987, par. 4.4.1.1.4.1.

24. AAS System Level Specification, FAA-ER-130-005H-AP, August 28, 1987, par. 4.4.1.1.4.2.

25. AAS System Level Specification, FAA-ER-130-005H-AP, August 28, 1987, par. 4.4.1.1.4.3.

26. AAS System Level Specification, FAA-ER-130-005H-AP, August 28, 1987, par. 4.4.1.1.4.4.

27. AAS System Level Specification, FAA-ER-130-005H-AP, August 28, 1987, par. 4.4.1.1.4.9.

28. AAS System Level Specification, FAA-ER-130-005H-AP, August 28, 1987, par. 20.3.7.1.1.3.6 by way of 4.4.1.2.1.5 by way of 4.4.1.2.1 by way of SOW 3.6.3.1.2.

29. AAS System Level Specification, FAA-ER-130-005H-AP, August 28, 1987, par. 20.3.7.1.1.3.7 by way of 4.4.1.2.1.5 by way of 4.4.1.2.1 by way of SOW 3.6.3.1.2.

30. AAS System Level Specification, FAA-ER-130-005H-AP, August 28, 1987, par. 3.3.9, e and l, by way of 4.4.1.2.1.5.1 by way of 4.4.1.2.1 by way of SOW 3.6.3.1.2.

31. AAS System Level Specification, FAA-ER-130-005H-AP, August 28, 1987, par. 20.3.7.1.1.3.2 by way of 4.4.1.2.1.5.1, a by way of 4.4.1.2.1 by way of SOW 3.6.3.1.2.

32. AAS System Level Specification, FAA-ER-130-005H-AP, August 28, 1987, par.20.3.7.1.1.3.13.

33. AAS System Level Specification, FAA-ER-130-005H-AP, August 28, 1987, par. 20.3.7.1.1.3.3 by way of 4.4.1.2.5.1, b by way of 4.4.1.2.1 by way of SOW 3.6.3.1.2.

34. AAS System Level Specification, FAA-ER-130-005H-AP, August 28, 1987, par. 3.7.1.1.1.3.7 by way of 4.4.1.2.1.5.1, b by way of 4.4.1.2.1 by way of SOW 3.6.3.1.2.

35. AAS System Level Specification, FAA-ER-130-005H-AP, August 28, 1987, par. 20.3.7.1.1.3.12 by way of 4.4.1.2.1.5.1, c by way of 4.4.1.2.1 by way of SOW 3.6.3.1.2.

36. AAS System Level Specification, FAA-ER-130-005H-AP, August 28, 1987, par. 20.3.7.1.1.3.1 by way of 4.4.1.2.1.6 by way of SOW 3.6.3.1.2.

37. AAS System Level Specification, FAA-ER-130-005H-AP, August 28, 1987, par. 20.3.7.1.1.3.1 by way of 4.4.1.2.1.6 by way of SOW 3.6.3.1.2.

38. AAS System Level Specification, FAA-ER-130-005H-AP, August 28, 1987, par. 20.3.7.1.1.3.1 by way of 4.4.1.2.1.6 by way of SOW 3.6.3.1.2.

39. AAS System Level Specification, FAA-ER-130-005H-AP, August 28, 1987, par. 4.4.1.2.1.6 by way of SOW 3.6.3.1.2.

40. AAS System Level Specification, FAA-ER-130-005H-AP, August 28, 1987, par. 4.4.1.2.1.7 by way of SOW 3.6.3.1.2.

41. AAS System Level Specification, FAA-ER-130-005H-AP, August 28, 1987, par. 4.4.1.1.2.4 by way of 4.4.1.2.1.9 by way of SOW 3.6.3.1.2.

42. AAS System Level Specification, FAA-ER-130-005H-AP, August 28, 1987, pars. 3.2.2 and 3.5 by way of 4.4.1.1.2.5 by way of SOW 3.6.3.1.2.

43. AAS System Level Specification, FAA-ER-130-005H-AP, August 28, 1987, par. 20.3.6 by way of 4.4.1.1.2.6 by way SOW 3.6.3.1.2.

44. AAS System Level Specification, FAA-ER-130-005H-AP, August 28, 1987, pars. 3.3.8.2.4 and 3.3.8.3.3 by way of 4.4.1.1.2.5 by way SOW 3.6.3.1.2.

45. AAS System Level Specification, FAA-ER-130-005H-AP, August 28, 1987, par. 20.3.2.6.2 by way of 4.4.1.2.6 by way of SOW 3.6.3.1.2.

46. AAS System Level Specification, FAA-ER-130-005H-AP, August 28, 1987, par. 20.3.7.1.1.3.14 by way of 4.4.1.1.2.6 by way of SOW 3.6.3.1.2.

47. AAS System Level Specification, FAA-ER-130-005H-AP, August 28, 1987, par. 20.3.1.1.2.11 by way of 4.4.1.1.2.7 by way of SOW 3.6.3.1.2.

48. AAS System Level Specification, FAA-ER-130-005H-AP, August 28, 1987, par. 20.3.1.1.3.9 by way of 4.4.1.1.2.8 by way of SOW 3.6.3.1.2.

49. AAS System Level Specification, FAA-ER-130-005H-AP, August 28, 1987, par. 4.4.1.1.2.14 by way of 4.4.1.2.1.15 by way of sow 3.6.3.1.2.

50. AAS System Level Specification, FAA-ER-130-005H-AP, August 28, 1987, par. 4.4.1.2.1.16 by way of SOW 3.6.3.1.2.

51. AAS System Level Specification, FAA-ER-130-005H-AP, August 28, 1987, par. 4.4.3 by way of SOW 3.6.3.1.4.

52. AAS System Level Specification, FAA-ER-130-005H-AP, August 28, 1987, par. 4.4.1.1.3.

53. AAS System Level Specification, FAA-ER-130-005H-AP, August 28, 1987, par. 4.4.1.1.3.

54. AAS System Level Specification, FAA-ER-130-005H-AP, August 28, 1987, par. 4.4.1.1.3.

55. System Level Specification FAA-ER-130-005H-AP with SCN 014, May 25, 1988, Paragraph 3.7.1.2.2.4.

56. AAS System Level Specification, FAA-ER-130-005H-AP, August 28, 1987, par. 4.1.1.2.

57. AAS Statement of Work Acquisition Phase, FAA-SOW-240-002, August 28, 1987, par. 3.6.2.f

58. AAS Statement of Work Acquisition Phase, FAA-SOW-240-002, August 28, 1987, par. 3.6.2.d

59. AAS Statement of Work Acquisition Phase, FAA-SOW-240-002, August 28, 1987, par. 3.6.6.

60. AAS System Level Specification, FAA-ER-130-005H-AP, August 28, 1987, par. 4.4.1.1.1.1 by way of 3.6.3.2.1.

61. AAS System Level Specification, FAA-ER-130-005H-AP, August 28, 1987, par. 4.4.1.1.1.2. by way of SOW 3.6.3.2.1.

62. AAS System Level Specification, FAA-ER-130-005H-AP, August 28, 1987, par. 3.3.2 by way of 4.4.1.1.1.3 by way of SOW 3.6.3.2.1.

63. AAS System Level Specification, FAA-ER-130-005H-AP, August 28, 1987, par. 4.4.1.1.4.6.

64. AAS System Level Specification, FAA-ER-130-005H-AP, August 28, 1987, par. 4.4.1.1.4.7, 20.3.7.1.1.3.14, and 3.7.1.6.2.1.

65. AAS System Level Specification, FAA-ER-130-005H-AP, August 28, 1987, par. 4.4.1.2.1.1.

66. AAS System Level Specification, FAA-ER-130-005H-AP, August 28, 1987, par. 4.4.1.2.1.1. and 20.3.7.1.2.1.1.

67. AAS System Level Specification, FAA-ER-130-005H-AP, August 28, 1987, par. 3.7.1.2.1.1.1.

68. AAS System Level Specification, FAA-ER-130-005H-AP, August 28, 1987, par. 3.7.1.2.1.1.1.1.

69. AAS System Level Specification, FAA-ER-130-005H-AP, August 28, 1987, par. 3.7.1.2.1.1.1.2., 20.3.7.1.2.1.1 a., 20.3.7.1.2.1.1 b., and 20.3.7.1.2.1.1 o.

70. AAS System Level Specification, FAA-ER-130-005H-AP, August 28, 1987, par. 3.7.1.2.1.1.1.3, 20.3.7.1.2.1.1 c, 20.3.7.1.2.1.1 h, 20.3.7.1.2.1.1 i, 20.3.7.1.2.1.1 j, 20.3.7.1.2.1.1 l, 20.3.7.1.2.1.1 n, 20.3.7.1.2.1.1 p, 20.3.7.1.2.1.1 r, 20.3.7.1.2.1.1 s. and 20.3.7.1.2.1.1 t.

71. AAS System Level Specification, FAA-ER-130-005H-AP, August 28, 1987, par. 3.7.1.2.1.1.1.14 and 20.3.7.1.2.1.1 e.

72. AAS System Level Specification, FAA-ER-130-005H-AP, August 28, 1987, par. 20.3.7.1.2.1.9.

73. AAS System Level Specification, FAA-ER-130-005H-AP, August 28, 1987, par. 3.7.1.2.1.1.15 and 3.7.1.2.1.1.2.

74. AAS System Level Specification, FAA-ER-130-005H-AP, August 28, 1987, par. 3.7.1.2.1.1.18.

75. AAS System Level Specification, FAA-ER-130-005H-AP, August 28, 1987, par. 3.7.1.2.1.1.21.

76. AAS System Level Specification, FAA-ER-130-005H-AP, August 28, 1987, par. 3.7.1.2.1.1.22.

77. AAS System Level Specification, FAA-ER-130-005H-AP, August 28, 1987, par. 3.7.1.2.1.1.1.4.

78. AAS System Level Specification, FAA-ER-130-005H-AP, August 28, 1987, par. 3.7.1.2.1.1.1.5.

79. AAS System Level Specification, FAA-ER-130-005H-AP, August 28, 1987, par. 3.7.1.2.1.1.1.6.

80. AAS System Level Specification, FAA-ER-130-005H-AP, August 28, 1987, par. 3.7.1.2.1.1.1.7.

81. AAS System Level Specification, FAA-ER-130-005H-AP, August 28, 1987, par. 3.7.1.2.1.1.1.9.

82. AAS System Level Specification, FAA-ER-130-005H-AP, August 28, 1987, par. 3.7.1.2.1.1.1.11.

83. AAS System Level Specification, FAA-ER-130-005H-AP, August 28, 1987, par. 3.7.1.2.1.1.1.13.

84. AAS System Level Specification, FAA-ER-130-005H-AP, August 28, 1987, par. 3.7.1.2.1.1.1.15.

85. Added by comment from the AT TRVT, September, 1989.

86. AAS System Level Specification, FAA-ER-130-005H-AP, August 28, 1987, par. 4.4.1.2.1.1.

87. AAS System Level Specification, FAA-ER-130-005H-AP, August 28, 1987, par. 3.7.1.2.2. , Table 3.7-8. and Table 3.7-9.

88. AAS System Level Specification, FAA-ER-130-005H-AP, August 28, 1987, par. 3.7.1.2.2.1.

89. AAS System Level Specification, FAA-ER-130-005H-AP, August 28, 1987, par. 3.7.1.2.2.4.

90. AAS System Level Specification, FAA-ER-130-005H-AP, August 28, 1987, par. 3.7.1.2.2.6.

91. AAS System Level Specification, FAA-ER-130-005H-AP, August 28, 1987, par. 3.7.1.2.2.7.

92. AAS System Level Specification, FAA-ER-130-005H-AP, August 28, 1987, par. 3.7.1.2.2.8.

93. AAS System Level Specification, FAA-ER-130-005H-AP, August 28, 1987, par. 4.4.1.1.2.2.

94. AAS System Level Specification, FAA-ER-130-005H-AP, August 28, 1987, par. 4.4.1.1.2.2.2.

95. AAS System Level Specification, FAA-ER-130-005H-AP, August 28, 1987, par. 4.4.1.2.1.2.3.1, 20.3.7.1.2, 20.3.7.1.2.1 f, and 3.7.1.2.1.1.

96. AAS System Level Specification, FAA-ER-130-005H-AP, August 28, 1987, par. 4.4.1.2.1.2.3.1, 20.3.7.1.2.1.

97. AAS System Level Specification, FAA-ER-130-005H-AP, August 28, 1987, par. 4.4.1.2.1.2.3.1, 20.3.7.1.2.2.

98. AAS System Level Specification, FAA-ER-130-005H-AP, August 28, 1987, par. 4.4.1.2.1.2.3.1, 20.3.7.1.2.3.

99. AAS System Level Specification, FAA-ER-130-005H-AP, August 28, 1987, par. 4.4.1.2.1.2.3.1, 20.3.7.1.2.5.

100. AAS System Level Specification, FAA-ER-130-005H-AP, August 28, 1987, par. 4.4.1.1.2.2.2 b.

101. AAS System Level Specification, FAA-ER-130-005H-AP, August 28, 1987, par. 4.4.1.2.1.5.2, 20.3.7.1.1.3.2, and 20.3.7.1.1.2 except that reporting to the MPS is not required for the ISSS.

102. AAS System Level Specification, FAA-ER-130-005H-AP, August 28, 1987, par. 4.4.1.2.1.16.

103. AAS System Level Specification, FAA-ER-130-005H-AP, August 28, 1987, par. 4.4.1.1.2.4.

104. AAS System Level Specification, FAA-ER-130-005H-AP, August 28, 1987, par. 3.5.4.5.3.2.

105. AAS System Level Specification, FAA-ER-130-005H-AP, August 28, 1987, par. 4.4.1.1.2.5.

106. AAS System Level Specification, FAA-ER-130-005H-AP, August 28, 1987, par. 4.4.1.1.2.6.

107. AAS System Level Specification, FAA-ER-130-005H-AP, August 28, 1987, par. 20.3.6.

108. AAS System Level Specification, FAA-ER-130-005H-AP, August 28, 1987, par. 20.3.7.1.1.3.5.

109. AAS System Level Specification, FAA-ER-130-005H-AP, August 28, 1987, par. 3.3.8.2.4, and 3.3.8.3.3.

110. AAS System Level Specification, FAA-ER-130-005H-AP, August 28, 1987, par. 20.3.3.

111. AAS System Level Specification, FAA-ER-130-005H-AP, August 28, 1987, par. 20.3.2.6.2.

112. AAS System Level Specification, FAA-ER-130-005H-AP, August 28, 1987, par. 20.3.7.1.1.3.14.

113. AAS System Level Specification, FAA-ER-130-005H-AP, August 28, 1987, par. 4.4.1.1.2.7, 20.3.7.1.1.3.11, and 3.7.1.1.1.3.8.

114. AAS System Level Specification, FAA-ER-130-005H-AP, August 28, 1987, par. 4.4.1.1.2.8, and 20.3.7.1.1.3.9.

115. AAS System Level Specification, FAA-ER-130-005H-AP, August 28, 1987, par. 4.4.1.1.2.9. Additional failure/recovery testing information is found in paragraphs 4.4.1.2.1.5, 20.3.7.1.1.2, 20.3.7.1.1.3, and 3.7.1.1.1.2.

116. AAS System Level Specification, FAA-ER-130-005H-AP, August 28, 1987, par. 4.4.1.1.2.11, 4.4.1.2.1.6, 3.1.8, 20.3.7.1.1.3.1, and 20.3.2.1.2.2.

117. AAS System Level Specification, FAA-ER-130-005H-AP, August 28, 1987, par. 4.4.1.1.2.12, 4.4.1.1.3.3, and 4.4.1.2.1.

118. AAS System Level Specification, FAA-ER-130-005H-AP, August 28, 1987, par. 4.4.1.2.1.3, and 20.3.2.1.

119. AAS System Level Specification, FAA-ER-130-005H-AP, August 28, 1987, par. 4.4.1.2.1.4.

120. AAS System Level Specification, FAA-ER-130-005H-AP, August 28, 1987, par. 4.4.1.2.1.8, 20.3.7.1.2.1.1, and also see par. 82.1.2.1.1 for the Situation display test requirements.

121. AAS System Level Specification, FAA-ER-130-005H-AP, August 28, 1987, par. 4.4.1.1.2.14, and 20.3.7.1.1.3.8.

122. AAS System Level Specification, FAA-ER-130-005H-AP, August 28, 1987, par. 4.4.1.2.1.16.

123. AAS System Level Specification, FAA-ER-130-005H-AP, August 28, 1987, par. 4.4.1.1.4.5.

124. AAS System Level Specification, FAA-ER-130-005H-AP, August 28, 1987, par. 4.4.1.1.4.8, 4.4.1.2.1.4.2 b., 4.4.1.2.1.7, and 4.4.1.2.1.4.2-c.

125. AAS System Level Specification, FAA-ER-130-005H-AP, August 28, 1987, par. 4.4.1.1.3.1.

126. AAS System Level Specification, FAA-ER-130-005H-AP, August 28, 1987, par. 4.4.1.1.3.2.

127. Operations Plan for the Operational Test and Evaluation (OT&E) of the Peripheral Adapter Module Replacement Item (PAMRI) and Initial Sector Suite System (ISSS) at the FAA Technical Center, April 1, 1989.

128. AAS System Level Specification, FAA-ER-130-005H-AP, August 28, 1987, par. 4.4.1.1.1.1.

129. AAS System Level Specification, FAA-ER-130-005H-AP, August 28, 1987, par. 4.4.1.1.1.1.

130. AAS System Level Specification, FAA-ER-130-005H-AP, August 28, 1987, par. 4.4.1.1.1.1.

131. AAS System Level Specification, FAA-ER-130-005H-AP, August 28, 1987, par. 4.4.1.1.1.3.

132. AAS System Level Specification, FAA-ER-130-005H-AP, August 28, 1987, par. 4.4.1.1.1.2.

133. Order 6030.45, Facility Reference Data File, November 2, 1987, par 403.a(2), page 23.

134. System/Segment Specification Volume IV ISSS Requirements CDRL A093, Revised Final dated April 3, 1989, par. 4.4.1.1.1.3 and 3.3.2.

135. AAS System Level Specification, FAA-ER-130-005H-AP, August 28, 1987, par. 4.4.1.1.3.3.

136. AAS System Level Specification, FAA-ER-130-005H-AP, August 28, 1987, par. 4.4.1.2.2.3.1.

137. AAS System Level Specification, FAA-ER-130-005H-AP, August 28, 1987, par. 4.4.1.2.2.3.2.

138. AAS System Level Specification, FAA-ER-130-005H-AP, August 28, 1987, par. 4.4.1.2.2.3.3.

139. AAS System Level Specification, FAA-ER-130-005H-AP, August 28, 1987, par. 20.3.7.1.1.3.3.

140. AAS System Level Specification, FAA-ER-130-005H-AP, August 28, 1987, par. 20.3.7.1.1.3.10 and 3.7.1.1.1.3.7.

141. AAS System Level Specification, FAA-ER-130-005H-AP, August 28, 1987, par. 20.3.7.1.1.3.12.

142. AAS System Level Specification, FAA-ER-130-005H-AP, August 28, 1987, par. 4.4.1.2.2.3.4.

143. AAS System Level Specification, FAA-ER-130-005H-AP, August 28, 1987, par. 4.4.1.2.2.3.4.

144. AAS System Level Specification, FAA-ER-130-005H-AP, August 28, 1987, par. 4.4.1.2.2.3.4.

145. Advanced Automation System Transition Concepts and Requirements, FAA-TRO-AAP-003, August 28, 1987, 3.1, 6th subparagraph.

146. AAS System Level Specification, FAA-ER-130-005H-AP, August 28, 1987, par. 20.3.7.1.1.3.1, 1st subparagraph.

147. AAS System Level Specification, FAA-ER-130-005H-AP, August 28, 1987, par. 20.3.7.1.1.3.1, 2nd subparagraph.

148. Advanced Automation System Transition Concepts and Requirements, FAA-TRO-AAP-003, August 28, 1987, par. 3.1.1.

149. Advanced Automation System Transition Concepts and Requirements, FAA-TRO-AAP-003, August 28, 1987, par. 3.1.1.2.2 c.

150. Advanced Automation System Transition Concepts and Requirements, FAA-TRO-AAP-003, August 28, 1987, par. 3.1.1.2.2 d.

151. AAS System Level Specification, FAA-ER-130-005H-AP, August 28, 1987, par. 4.4.1.2.2.3.5.

152. AAS System Level Specification, FAA-ER-130-005H-AP, August 28, 1987, par. 3.7.1.1.1.3.8 by way of 20.3.7.1.1.3.11 by way of 4.4.1.4.2.3.6.

153. AAS System Level Specification, FAA-ER-130-005H-AP, August 28, 1987, par. 4.4.1.2.2.3.7.

154. AAS System Level Specification, FAA-ER-130-005H-AP, August 28, 1987, par. 4.4.1.1.2.6 d. by way of 4.4.2.2.3.7.

155. AAS System Level Specification, FAA-ER-130-005H-AP, August 28, 1987, par. 3.7.1.6.1.2.1 by way of 20.3.7.1.1.3.4 by way of 4.4.1.1.2.6i by way of 4.4.1.1.2.6 by way of 4.4.1.2.2.3.7 by way of 4.4.1.2.2.3.

156. AAS System Level Specification, FAA-ER-130-005H-AP, August 28, 1987, par. 4.4.1.1.2.14 by way of 4.4.1.2.2.3.8 by way of 4.4.1.2.2.3.

157. AAS System Level Specification, FAA-ER-130-005H-AP, August 28, 1987, par. 4.4.1.1.3.4 by way of 4.4.1.2.2.4 by way of 4.4.1.2.2.3.

158. Order 6020.2A, Joint Acceptance Inspections for FAA Facilities, March 28, 1974, par. 105, item d.

159. AAS System Level Specification, FAA-ER-130-005H-AP, August 28, 1987, par. 4.4.1.1.3.

160. AAS System Level Specification, FAA-ER-130-005H-AP, August 28, 1987, par. 4.4.1.1.3.3.

161. Order 6000.15A, General Maintenance Handbook for Airway Facilities, October 5, 1981, par. 147.

162. Order 6000.15A, General Maintenance Handbook for Airway Facilities, October 5, 1981, par. 148.

163. AAS System Level Specification, FAA-ER-130-005H-AP, August 28, 1987, par. 3.5.4.3.3.

164. Order 6000.15A, General Maintenance Handbook for Airway Facilities, October 5, 1981, par. 155.

165. AAS System Level Specification, FAA-ER-130-005H-AP, August 28, 1987, par. 20.3.7.1.1.3.9.

166. Order 6000.15a, General Maintenance Handbook for Airway Facilities, October 5, 1981, par. 154.

167. Order 6030.45, Facility Reference Data File, November 2, 1987, par. 104, q.

168. Order 6040.15, National Airspace Performance Reporting System (NAPRS), November 4, 1981.

169. Sentence added by AT TRVT review of April 28, 1989, draft version.

170. Advanced Automation System Transition Concepts and Requirements, FAA-TRO-AAP-003, August 28, 1987, par. 3.1.1.1.3.

171. Advanced Automation System Transition Concepts and Requirements, FAA-TRO-AAP-003, August 28, 1987, par. 3.1.1.1.3.

172. Advanced Automation System Transition Concepts and Requirements, FAA-TRO-AAP-003, August 28, 1987, par. 3.1.1.1.3.

173. Order 6030.45 Facility Reference Data File, November 2, 1987.

174. Sentence added by AT TRVT review of April 28, 1989 draft version.

175. Sentence added by AT TRVT review of April 28, 1989 draft version.

176. Sentence added by AT TRVT review of April 28, 1989 draft version.

177. Sentence added by AT TRVT review of April 28, 1989 draft version.

178. Order 6030.45 Facility Reference Data File, November 2, 1987.

179. Sentence added by AT TRVT review of April 28, 1989 draft version.

180. Advanced Automation System Transition Concepts and Requirements, FAA-TRO-AAP-003, August 28, 1987, par. 3.1.1.1.4.

181. Last two sentences added by AT TRVT review of April 28, 1989 draft version.

182. NAS-MD-110, Test and Evaluation (T&E) Terms and Definitions for the National Airspace System, March 27, 1987, par. 6.3.2.3.

183. AAS System Level Specification, FAA-ER-130-005H-AP, August 28, 1987, par. 3.7.1.2.1.1.2.1.

184. Order 6030.45, Facility Reference Data File, November 2, 1987, par. 401.

185. Order 6030.45, Facility Reference Data File, November 2, 1987, par. 403.a.(2).

186. Order 6030.45, Facility Reference Data File, November 2, 1987, par. 405.a.

187. Order 6030.45, Facility Reference Data File, November 2, 1987, par. 405.g.

188. Order 6030.45, Facility Reference Data File, November 2, 1987, par. 500.

189. Order 6030.45, Facility Reference Data File, November 2, 1987, par. 501.

190. Order 6030.45, Facility Reference Data File, November 2, 1987, par. 405.j.

ENDNOTES FOR CHAPTER 9

1. AAS System Level Specification, FAA-ER-130-005H-AP, August 28, 1987, par. 3.5.1.
2. AAS System Level Specification, FAA-ER-130-005H-AP, August 28, 1987, par. 3.5.4.1.1.
3. AAS System Level Specification, FAA-ER-130-005H-AP, August 28, 1987, par. 3.5.1.
4. AAS Statement of Work Acquisition Phase, FAA-SOW-240-002, August 28, 1987, par. 3.5.
5. AAS Statement of Work Acquisition Phase, FAA-SOW-240-002, August 28, 1987, par. 3.5.1.2.
6. AAS Statement of Work Acquisition Phase, FAA-SOW-240-002, August 28, 1987, par. 3.5.4.
7. AAS Statement of Work Acquisition Phase, FAA-SOW-240-002, August 28, 1987, par. 3.5.4.2.
8. AAS Statement of Work Acquisition Phase, FAA-SOW-240-002, August 28, 1987, par. 3.5.4.7.
9. AAS Statement of Work Acquisition Phase, FAA-SOW-240-002, August 28, 1987, par. 3.5.4.8.
10. FAA Advance Automation System Integrated Support Plan, FAA-AP-1991-0991, par. 3.2.
11. AAS System Level Specification, FAA-ER-130-005H-AP, August 28, 1987, par. 3.5.4.1.2.
12. FAA Advance Automation System Integrated Support Plan, FAA-AP-1991-0991, par. 4.1.1.
13. AAS System Level Specification, FAA-ER-130-005H-AP, August 28, 1987, par. 3.5.4.2.1.
14. AAS System Level Specification, FAA-ER-130-005H-AP, August 28, 1987, par. 3.5.3.1.
15. AAS System Level Specification, FAA-ER-130-005H-AP, August 28, 1987, par. 3.2.2.1.3.
16. AAS System Level Specification, FAA-ER-130-005H-AP, August 28, 1987, par. 3.2.2.1.3.
17. AAS System Level Specification, FAA-ER-130-005H-AP, August 28, 1987, par. 3.2.2.1.3.
18. AAS System Level Specification, FAA-ER-130-005H-AP, August 28, 1987, par. 3.2.2.1.6.
19. AAS System Level Specification, FAA-ER-130-005H-AP, August 28, 1987, par. 3.5.4.3.5.
20. AAS System Level Specification, FAA-ER-130-005H-AP, August 28, 1987, par. 3.5.4.1.3.
21. FAA Advance Automation System Integrated Support Plan, FAA-AP-1991-0991, par. 4.1.1.
22. AAS System Level Specification, FAA-ER-130-005H-AP, August 28, 1987, par. 3.5.4.3.2.
23. AAS Data Item Description Acquisition Phase, FAA-DID-240-002, August 28, 1987, Sequential Task Description Report, DI-ILDD-80115, Maintenance Level Item.
24. FAA Advance Automation System Integrated Support Plan, FAA-AP-1991-0991, par. 4.1.2.
25. AAS System Level Specification, FAA-ER-130-005H-AP, August 28, 1987, par. 3.5.4.3.2.
26. AAS System Level Specification, FAA-ER-130-005H-AP, August 28, 1987, par. 3.5.4.2.3.
27. FAA Advance Automation System Integrated Support Plan, FAA-AP-1991-0991, par. 4.1.3.
28. FAA Advance Automation System Integrated Support Plan, FAA-AP-1991-0991, par. 5.1.
29. AAS System Level Specification, FAA-ER-130-005H-AP, August 28, 1987, par. 3.5.4.4.

30. FAA Advance Automation System Integrated Support Plan, FAA-AP-1991-0991, par. 5.2.

31. AAS System Level Specification, FAA-ER-130-005H-AP, August 28, 1987, par. 3.5.4.5.3.1.1.

32. AAS System Level Specification, FAA-ER-130-005H-AP, August 28, 1987, par. 3.5.4.5.3.2.1.

33. AAS System Level Specification, FAA-ER-130-005H-AP, August 28, 1987, par. 3.5.4.5.3.2.1.

34. AAS System Level Specification, FAA-ER-130-005H-AP, August 28, 1987, par. 3.5.4.5.3.2.1.

35. AAS System Level Specification, August 28, 1987, par. 3.5.4.5.5.1.

36. Advanced Automation System Request for Proposal Acquisition Phase, August 28, 1987, Section B, par. B.2.

37. Advanced Automation System Request for Proposal Acquisition Phase, August 28, 1987, Section B, par. B.37 and B.38.

38. FAA Advance Automation System Integrated Support Plan, FAA-AP-1991-0991, par. 6.0.

39. AAS Statement of Work Acquisition Phase, FAA-SOW-240-002, August 28, 1987, par. 3.9.1.

40. FAA Advance Automation System Integrated Support Plan, FAA-AP-1991-0991, par. 6.2.

41. Advanced Automation System, System Level Specification, FAA-ER-130-005H-AP, 28 Aug 1988, SCN 013, 11 March 1988, par. 3.7.1.5.3 by way of 20.3.7.1.3.

42. Advanced Automation System Request for Proposal Acquisition Phase, August 28, 1987, Section B, par. B.2.

43. AAS System Level Specification, FAA-ER-130-005H-AP, August 28, 1987, par. 3.6.4.3.

44. AAS System Level Specification, FAA-ER-130-005H-AP, August 28, 1987, par. 3.6.4.3.

45. AAS System Level Specification, FAA-ER-130-005H-AP, August 28, 1987, par. 3.6.4.3.

46. AAS System Level Specification, FAA-ER-130-005H-AP, August 28, 1987, par. 3.6.3.

47. AAS System Level Specification, FAA-ER-130-005H-AP, August 28, 1987, par. 3.6.3.6.

48. FAA Advance Automation System Integrated Support Plan, FAA-AP-1991-0991, par. 6.2.

49. AAS System Level Specification, FAA-ER-130-005H-AP, August 28, 1987, par. 3.6.3.11.

50. AAS System Level Specification, FAA-ER-130-005H-AP, August 28, 1987, par. 3.6.3.4.

51. AAS System Level Specification, FAA-ER-130-005H-AP, August 28, 1987, par. 3.6.5.

52. AAS System Level Specification, FAA-ER-130-005H-AP, August 28, 1987, par. 3.6.4.4.

53. FAA Advance Automation System Integrated Support Plan, FAA-AP-1991-0991, par. 6.2.

54. AAS System Level Specification, FAA-ER-130-005H-AP, August 28, 1987, par. 3.6.4.

55. AAS System Level Specification, FAA-ER-130-005H-AP, August 28, 1987, par. 3.6.4.1.1.

56. AAS System Level Specification, FAA-ER-130-005H-AP, August 28, 1987, par. 3.6.4.1.5.

57. AAS System Level Specification, FAA-ER-130-005H-AP, August 28, 1987, par. 3.6.4.3.1.1.

58. AAS System Level Specification, FAA-ER-130-005H-AP, August 28, 1987, par. 3.6.4.3.2.

59. AAS Statement of Work Acquisition Phase, FAA-SOW-240-002, August 28, 1987, par. 3.5.7.

60. AAS Data Item Description Acquisition Phase, FAA-DID-240-002, August 28, 1987, DI-ILSS-80116.

61. AAS System Level Specification, FAA-ER-130-005H-AP, August 28, 1987, par. 3.5.4.5.5.2.

62. Consensus of the AT & AF TRVTs.

63. AAS System Level Specification, FAA-ER-130-005H-AP, August 28, 1987, par. 20.3.1.1

ENDNOTES FOR CHAPTER 10

1. AAS Configuration Management Plan, dated February 28, 1989.