CHANGE

U.S. DEPARTMENT OF TRANSPORTATION
FEDERAL AVIATION ADMINISTRATION

6850.5C
CHG 1

1/31/96

SUBJ: MAINTENANCE OF LIGHTED NAVIGATIONAL AIDS

1. PURPOSE. This change transmits revised pages of Order 6850.5C to adjust maintenance schedules, change maintenance procedures to reduce maintenance time, and provide procedures for maintenance of the remote radio control systems (RRCS), types FA-10047 and FA-10266. This change implements Configuration Control Decision (CCD) No. N16975, Lighted Navigational Aids Handbook Revision to Optimize Preventive Maintenance.

2. DISTRIBUTION. This directive is distributed to selected offices and services within Washington Headquarters, regional Airway Facilities divisions, the FAA Technical Center, the Mike Monroney Aeronautical Center, and Airway Facilities field offices having the following facilities/equipment: ALS, LDIN, MALS, MALSR, ODALS, PAPI, REIL, SALS, SSALR, SSALS, VASI.

3. DISPOSITION OF TRANSMITTAL. Retain this transmittal.

PAGE CONTROL CHART

Remove Pages	Dated	Insert Pages	Dated
v and vi	3/27/95	v	3/27/95
		vi	1/31/96
ix and x	3/27/95	ix and x	1/31/96
45 thru 48	3/27/95	45	3/27/95
		46	1/31/96
		47	1/31/96
		48	3/27/95
51 and 52	3/27/95	51	3/27/95
		52	1/31/96
61 and 62	3/27/95	61 and 62	1/31/96
63 and 64	3/27/95	63	1/31/96
		64	3/27/95
77 and 78	3/27/95	77	3/27/95
		78	1/31/96
83 and 84	3/27/95	83	3/27/95
		84	1/31/96
85 and 86	3/27/95	85 and 86	1/31/96
		86-1 and 86-2	1/31/96
95 and 96	3/27/95	95	3/27/95
		96	1/31/96

Distribution: Selected Airway Facilities Field and Regional Offices, ZAF-603

Initiated By: AOS-240

PAGE CONTROL CHART (CONTINUED)

Remove Pages	Dated	Insert Pages	Dated
		96-1 and 96-2	1/31/96
99 and 100	3/27/95	99	1/31/96
		100	3/27/95

David L. Campbell for
George W. Terrell
Program Director for Operational Support

Paragraph *Page*

Section 3. RUNWAY-END IDENTIFIER LIGHTS

115.	Lamp Operation	53
116.	Remote Control Functions	53
117.	Vertical Alignment	53
118.	Horizontal Alignment	53
119.	Flashing Rate	53
120.	Input Voltage	54
121.	Obstructions	54
122.-129.	Reserved.	

Section 4. OBSTRUCTION LIGHTS

130.	Fixed Obstruction Lights	54
131.	Flashing Hazard Beacon Frequency (300MM Code Beacon)	54
132.	Rotating Hazard Beacons Flashing Frequency	54
133.	Flashing Frequency of High-Intensity, White Obstruction Lights	54
134.	Lamp Socket Voltage	54
135.	Fuses for Transformer and Feeder	54
136.	Rotating Hazard Beacons	54
137.-144.	Reserved.	

Section 5. TIME SWITCHES AND PHOTOELECTRIC DEVICES

145.	Control Devices	55
146.-150.	Reserved.	

Section 6. FOCUSING AND LAMPING

151.	Hazard Beacon (300MM Code Beacon)	56
152.	Rotating Beacon, 24-inch	57
153.	Rotating Beacon, 36-inch	57
154.	Beacon Lamp, Auxiliary and Principle Reflector Positions	57
155.-169.	Reserved.	

Chapter 4. PERIODIC MAINTENANCE

170.	Required Maintenance Activities	59

Paragraph *Page*

Section 1. PERFORMANCE CHECKS

Subsection 1. ALSF CATEGORY-1 SYSTEMS (ALSF-1, SSALS, SSALF, SSALR)

171. Monthly 59
172. Quarterly 59
173. Annually 60
174. Reserved.

Subsection 2. ALSF-2 CATEGORY-II AND III SYSTEMS AND ALSF-1 ON CATEGORY-II SYSTEMS

175. Weekly 60
176. Monthly 60
177. Quarterly 60
178. Annually 60
179.-180. Reserved.

Subsection 3. MEDIUM-INTENSITY APPROACH LIGHTING SYSTEM (MALS, MALSF, MALSR)

* 181. Quarterly ..... 61 *
182. Semiannually 61
183. Annually 61
184. Reserved.

Subsection 4. ODALS AND LDIN

185. Monthly 61
186. Semiannually 61
187. Annually 61
188. Reserved.

Subsection 5. VASI AND PAPI

189. Monthly 62
* 189-1. Quarterly ..... 62 *
190. Semiannually 62
191. Annually 62
192. Reserved.

Subsection 6. REIL

193. Semiannually 63
194. Annually 63

Paragraph *Page*

Subsection 1. HIGH-INTENSITY ALS SYSTEMS

294. Visual Checks 78
295. Meter Readings 78
296. ALS Monitor Check 78
297. Sequence Flasher (SFL) Monitor Check 80
298. Fifteen-Minute Timer 81
299. Vertical and Horizontal Alignment 81
300. Flashing Rate 84
301.-305. Reserved.

Subsection 2. MEDIUM-INTENSITY APPROACH LIGHTING SYSTEMS

* 306. Operational Checks ..... 84 *
307. Meter Readings 85
308. Vertical and Horizontal Alignment 85
309.-313. Reserved.

Subsection 3. ODALS AND LDIN SYSTEMS

314. Visual Checks 86
315. Operational Checks 86
* 316. Meter Readings 86-1
317.-319. Reserved.

Subsection 4. VASI AND PAPI

320. Visual Checks 86-1
321. Controls 86-1
322. Meter Readings ..... 86-2 *
323. Tilt Switch Adjustment 87
324. Vertical and Horizontal Alignment 87
325.-328. Reserved.

Subsection 5. REIL

* 329. Visual and Operational Control Checks 96
330. Vertical and Horizontal Alignment 96
331. Meter Readings 96-1
332. Monitor Operation ..... 96-1 *
333.-334. Reserved.

Paragraph *Page*

Subsection 6. OBSTRUCTION LIGHTS

335. Visual Checks 97
336. Beacon Frequency 97
337. Control Devices 97
338. Lamp Replacement 99
339. Reserved.

*

Subsection 7. WITHDRAWN - CHG 1

340. Withdrawn - CHG 1
341.-344. Reserved. *

Section 2. OTHER MAINTENANCE TASKS PROCEDURES

345. Glassware, Reflectors, and Filters 99
346. Supports 100
347. Transformer and Regulator Oil 100
348. Approach Line-of-Sight Clearance 100
349. Type LB-1 Light Bases 100
350. Oil Circuit Breaker Mechanism 102
351. Electrical Connections 102
352. ALS Light Fixtures 102
353. Relays 102
354. Flasher Master Timer 103
355. Warning and Identification Signs 103
356. Ammeter 103
357. High Intensity Approach Lighting Systems Group Lamp Replacement 104
358. Medium Intensity Approach Lighting Systems Group Lamp Replacement 104
359. ODALS/LDIN/REIL Group Lamp Replacement 104
360. ALSF-2 Power Transfer Operation Check 104
361. VASI Regulator 105
362. VASI and PAPI Group Lamp Replacement 105
363. VASI and PAPI Annual Task 105
364. REIL Safety Devices 105
365. Obstruction Light Checks 106
366. Obstruction Light/Beacon Scheduled Lamp Change Tasks 106
367.-419. Reserved.

Section 3. SPECIAL MAINTENANCE PROCEDURES

420. ALS Safety Precautions 108
421. ALS Oil Circuit Breaker 108

Section 1. APPROACH LIGHTING SYSTEMS (Continued)

Parameter	Reference Paragraph	Standard	Tolerance/Limit Initial	Tolerance/Limit Operating
(8) 1,000-foot bar		All lamps on	Same as standard	Less than 4 adjacent lamps out, and 20 percent or less (random) of lamps out
c. MALS AND SSALS	306			
(1) Overall system		All lamps on	Same as standard	Less than 2 light bars out as defined in 71c(2), (3), (4), and 20 percent or less (random) of lamps out
(2) 5-lamp bar		All lamps on	Same as standard	Less than 3 lamps out
(3) Threshold bar (where existing)		All lamps on	Same as standard	Less than 4 lamps out
(4) 1000-foot bar		All lamps on	Same as standard	Less than 4 lamps out
→72. VERTICAL ANGULAR ALIGNMENT	299, 308	Locally established vertical angle of lighted beam axis of light	Standard ±1°	Standard ±2°
→73. HORIZONTAL ANGULAR ALIGNMENT.	299, 308	Parallel to centerline of runway	Same as standard	Same as initial
→74. REGULATOR OUTPUT	295			
a. ALSF-1, ALSF-2, SSALR, SSALS SSALF, ALL SYSTEMS EXCEPT DUAL MODE SYSTEMS.				
(1) Step 1		8.3 A	±0.2 A	±0.4 A
(2) Step 2		9.9 A	±0.2 A	±0.4 A
(3) Step 3		12.1 A	±0.2 A	±0.4 A
(4) Step 4		15.3 A	±0.2 A	±0.4 A

Section 1. APPROACH LIGHTING SYSTEMS (Continued)

Parameter	Reference Paragraph	Standard	Tolerance/Limit Initial	Tolerance/Limit Operating
(5) Step 5		20.0 A	+0.0 A, –0.2 A	+0.0 A, –0.4 A
b. ALSF-2/SSALR FA-9993/FA-10048 DUAL MODE SYSTEMS ONLY.				
(1) Step 1		8.5 A	±0.2 A	Same as initial
(2) Step 2		10.3 A	±0.3 A	Same as initial
(3) Step 3		12.4 A	±0.3 A	Same as initial
(4) Step 4		15.8 A	±0.4 A	Same as initial
(5) Step 5		20.0 A	+0.0 A, –0.4 A	Same as initial
→75. MALS VOLTAGE	307, Order 6950.17A			
a. Control Cabinet Supply Voltage		120 V or 240 V	±3 percent	±5 percent (for exceptions see Order 6950.17A)
* **b. Lamp Voltage (Measured at Transformer Output).**				*
(1) High step, 100 percent brightness		120 V	±3 percent	±5 percent
(2) Medium step, 20 percent brightness		75 V	±3 percent	±5 percent
(3) Low step, 4 percent brightness		50 V	±3 percent	±5 percent
c. Lamp Transformer Output (Line To Line).				
(1) High step, 100 percent brightness		240 V	±3 percent	±5 percent
(2) Medium step, 20 percent brightness		150 V	±3 percent	±5 percent
(3) Low step, 4 percent brightness		100 V	±3 percent	±5 percent
76. APPROACH LIGHTING SYSTEMS BRIGHTNESS STEPS (NOT APPLICABLE TO MALS).				
→ a. Change time from step 1 on initial turn on.	Instruction book	Delay from step 1. Refer to instruction book for specified time.	Same as standard	Same as initial

Section 1. APPROACH LIGHTING SYSTEMS (Continued)

Parameter	Reference Paragraph	Standard	Tolerance/Limit Initial	Tolerance/Limit Operating
b. Automatic reduction from step 5 to step 4.	298	15 minutes	±2 minutes	Same as initial
→77. **FILTERS**	345	All in place	Same as standard	Same as initial
→78. **SEQUENCE FLASHING LIGHTS.**				
a. **ALSF-1**	294	All lamps on	Same as standard	Less than 3 lamps out
b. **ALSF-2**	294	All lamps on	Same as standard	Less than 3 lamps out
c. **ALSF-2/SSALR Dual Mode System.**				
(1) ALSF-2	294	All lamps on	Same as standard	Less than 3 lamps out (not consecutive)
(2) SSALR	294	All lamps on	Same as standard	Less than 2 lamps out
d. **MALSF, MALSR, SSALF, and SSALR**	306	All lamps on	Same as standard	Less than 2 lamps out
e. **Flashing Rate**	300	120 flashes per minute	±2 flashes per minute	Same as initial
f. **Unit Input Voltage**	Order 6950.17A	240 V or 120 V	±3 percent	±5 percent (for exceptions see Order 6950.17A)
g. **Vertical Angular Alignment ALSF-1, ALSF-2, MALSF, MALSR, SSALF, SSALR**	299, 308, Order 6850.2A	All flashers aimed at 6° or as installed	±1°	±2°
* →79. **REMOTE CONTROL FUNCTIONS.**	306, 315	Operational	Same as standard	Same as initial *
→80. **OBSTRUCTIONS**	348	No obstruction	Same as standard	Same as initial
→81. **MONITOR SETTING.**				
a. **ALSF-1.**				
(1) Incandescent	296	Alarm with 6 lamps out, each loop	Standard +0, –2 lamps	Same as initial

Section 1. APPROACH LIGHTING SYSTEMS (Continued)

Parameter	Reference Paragraph	Standard	Tolerance/Limit Initial	Tolerance/Limit Operating
(2) Flashers	297	Alarm with 3 lamps out	Same as standard	Same as initial
b. ALSF-2.				
(1) Incandescent	296	Alarm with 6 lamps out each loop	Standard +0, –2 lamps	Same as initial
(2) Flashers	297	Alarm with 3 lamps out	Same as standard	Same as initial
c. ALSF-2/SSALR Dual Mode System.				
(1) ALSF-2				
(a) Incandescent	296b, Instruction book	CAUTION - 5 lamps out per loop	Same as standard	Same as initial
		FAILURE - 6 lamps out per loop	Same as standard	Same as initial
(b) Flashers	296b, Instruction book	CAUTION - 2 random units out	Same as standard	Same as initial
		FAILURE - 2 consecutive units out, 3 random units out	Same as standard	Same as initial
(2) SSALR.				
(a) Incandescent	Instruction book	CAUTION - 2 lamps out per loop	Same as standard	Same as initial
		FAILURE - 3 lamps out per loop	Same as standard	Same as initial
(b) Flashers	Instruction book	CAUTION - 1 units out	Same as standard	Same as initial
		FAILURE - 2 units out	Same as standard	Same as initial
8Z. ALSF-2 POWER TRANSFER (CATEGORY II AND III.)	360	1 second or less	Same as standard	Same as initial

Section 2. VISUAL APPROACH SLOPE INDICATOR AND PRECISION APPROACH PATH INDICATOR

Parameter	Reference Paragraph	Standard	Tolerance/Limit Initial	Tolerance/Limit Operating
c. **Upwind Bar (Bar No. 2)**		Commissioned angle (normally 3.25°)	±2 minutes	±6 minutes
→93. **PAPI ANGULAR ELEVATIONS.**				
a. **Standard Installation**	324			
(1) Light unit 1 (unit nearest runway)		Glide path angle plus 30 minutes	±2 minutes	±6 minutes
(2) Light unit 2		Glide path angle plus 10 minutes	±2 minutes	±6 minutes
(3) Light unit 3		Glide path angle minus 10 minutes	±2 minutes	±6 minutes
(4) Light unit 4		Glide path angle minus 30 minutes	±2 minutes	±6 minutes
b. **Installations for Height Group 4 Aircraft.**	324, Order 6850.2A			
(1) Light unit 1 (unit nearest runway)		Glide path angle plus 35 minutes	±2 minutes	±6 minutes
(2) Light unit 2		Glide path angle plus 15 minutes	±2 minutes	±6 minutes
(3) Light unit 3		Glide path angle minus 15 minutes	±2 minutes	±6 minutes
(4) Light unit 4		Glide path angle minus 35 minutes	±2 minutes	±6 minutes
→94. **VASI LIGHT-BOX HORIZONTAL ALIGNMENT.**	324	Parallel to runway centerline ±1/2°	Same as standard	Same as initial
→95. **PAPI LIGHT-BOX HORIZONTAL ALIGNMENT.**	324	Collinear with line perpendicular to runway centerline within 6 inches	Same as standard	Same as initial
→96. **VASI LIGHT-BAR BOXES VERTICAL ALIGNMENT.**	324	Within 2 minutes of each other	Same as standard	Same as initial

Section 2. VISUAL APPROACH SLOPE INDICATOR AND PRECISION APPROACH PATH INDICATOR (Continued)

Parameter	Reference Paragraph	Standard	Tolerance/Limit Initial	Tolerance/Limit Operating
→97. **VASI TILT SWITCH OPERATION**	323			
a. **Upper Limit**		Aiming angle +0.5° to 1°	Same as standard	Same as initial
b. **Lower Limit**		Aiming angle –0.25° to –0.5°	Same as standard	Same as initial
→98. **PAPI TILT SWITCH OPERATION**	323			
* a. **Upper Limit**		Aiming angle +0.5° to 1° (30 to 60 min.)	Same as standard	Same as initial
b. **Lower Limit**		Aiming angle –0.25° to –0.5° (–15 to –30 min.)	Same as standard	Same as initial *
→99. **PHOTOELECTRIC CONTROL**	321			
a. **Switching Time to High Intensity**		Within one minute	Same as standard	Same as initial
b. **Switching Time to Low Intensity**		Within one minute	Same as standard	Same as initial
c. **Orientation**		Toward north sky	Same as standard	Same as initial
→100. **THREE-STEP BRIGHTNESS SYSTEM REGULATOR OUTPUT CURRENT.**	Instruction book			
a. **High**		6.6 A	+0 A, –0.2 A	Same as initial
b. **Medium**		5.2 A	+0.5 A, –0.2 A	Same as initial
c. **Low**		4.1 A	+0.8 A, –0.2 A	Same as initial
→101. **TWO-STEP BRIGHTNESS SYSTEM LAMP CURRENT.**	Instruction book			
a. **High**		6.4 A	±0.2 A	Same as initial
b. **Low**		4.5 A	+1.2 A, –0.3 A	Same as initial
102. **INPUT VOLTAGE**	Instruction book, Order 6950.17A	Rated input	±5 percent	±10 percent (for exceptions see Order 6950.17A)

Section 1. PERFORMANCE CHECKS (Continued)
Subsection 3. MEDIUM-INTENSITY APPROACH LIGHTING SYSTEM - (MALS, MALSF, MALSR)

Performance Checks	Reference Paragraph: Standards and Tolerances	Reference Paragraph: Maintenance Procedures
* **181. MONTHLY** ..... Make visual operational checks of all lights, including flashers, on all brightness steps.	71c	306 *
182. SEMIANNUALLY.		
a. Check SFL flash rate	78e	300
* b. Check remote control function	79	306 *
183. ANNUALLY.		
a. Check all fixtures, including mirrors if installed, for vertical ..... and horizontal alignment.	72, 73	308
b. Record meter readings	75, 78f	307, Order 6950.17A
184. RESERVED.		

Subsection 4. ODALS AND LDIN

Performance Checks	Reference Paragraph: Standards and Tolerances	Reference Paragraph: Maintenance Procedures
185. MONTHLY ..... Make visual operational checks of all lights on all steps.	83	314
186. SEMIANNUALLY ..... Check remote control functions.	79	315
187. ANNUALLY ..... Record meter readings.	83	316
188. RESERVED.		

Section 1. PERFORMANCE CHECKS (Continued)
Subsection 5. VASI AND PAPI

Performance Checks	*Reference Paragraph*	
	Standards and Tolerances	*Maintenance Procedures*
189. MONTHLY.		
a. VASI. Visually check operation of all lights and lamp box alignment.	90, 91, 92, 94, 96	320
b. PAPI. Visually check operation of all lights and lamp box alignment.	90, 93, 95	320
*** 189-1. QUARTERLY.**		
a. VASI. Check vertical and horizontal alignment of all light boxes.	91, 92, 94, 96	324
b. PAPI. Check vertical and horizontal alignment of all light boxes.	93, 95	324 *
190. SEMIANNUALLY.		
a. VASI.		
(1) Check operation of controls	99	321
(2) Record meter readings	100, 101, 102	322, Instruction book
(3) Check VASI-2 tilt switch	97	323
* (4) Withdrawn - CHG 1		*
b. PAPI.		
(1) Check operation of controls	99	321
(2) Record meter readings	101, 102	322, Instruction book
(3) Check PAPI tilt switches	98	323
* (4) Withdrawn - CHG 1		*
191. ANNUALLY.		
* **a. VASI.** Check remote control functions (if applicable)	105	321
b. PAPI. Check remote control functions (if applicable)	105	321 *
192. RESERVED.		

Section 1. PERFORMANCE CHECKS (Continued)
Subsection 6. REIL

Performance Checks	Reference Paragraph: Standards and Tolerances	Reference Paragraph: Maintenance Procedures
193. SEMIANNUALLY.		
a. Make visual operation checks of all lights. Check and clean exterior as required.	115	329
b. Check both fixtures for damaged or misaligned lights	117, 118	330
c. Record input voltage at power control cabinet	120	331, Order 6950.17A
d. Check device that shuts down REIL if one flasher fails (if applicable).	NA	332
e. Check flasher rate	119	300
***194. ANNUALLY** Check remote control functions.	116	329 *

Subsection 7. OBSTRUCTION LIGHTS

Performance Checks	Reference Paragraph: Standards and Tolerances	Reference Paragraph: Maintenance Procedures
195. WEEKLY Check for burned-out lamps on installations with single obstruction light fixtures.	130	335
196. MONTHLY Check for burned-out lamps on installations with double obstruction light fixtures.	130	335
197. ANNUALLY.		
a. Check frequency of flashing and/or rotating beacon	131, 132, 133	336
b. Check operation of automatic control devices and alarm circuits	145	337, 431, 432
c. Check focusing and aiming of lamps	151, 152, 153, 154	338, 434
198.-201. RESERVED.		

Section 2. OTHER MAINTENANCE TASKS
Subsection 1. ALSF CATEGORY I SYSTEMS
(ALSF-1, SSALS, SSALF, SSALR)

Maintenance Task	*Reference Paragraph*	
	Standards and Tolerances	*Maintenance Procedures*
202. MONTHLY. Visually check for damaged or misaligned lamps, and cleanliness.	71, 72, 73, 77	345
203. QUARTERLY. Check the approach line-of-sight clearance for vegetation and other obstructions.	80	348
204. ANNUALLY.		
a. Check all light supports for rigidity, proper guy tensions, and obvious misalignment.	NA	346
b. Check oil level in regulators	NA	347
c. Check all structures for rot and corrosion	NA	NA
d. Clean substation compartments. (Observe safety precautions.)	NA	NA
e. Check for water in LB-1 light bases	NA	349
f. Check operation of oil circuit breaker mechanism	NA	350
g. Check all lightning arrestors, ground connections, electrical connections, and safety devices associated with power distribution equipment at terminal poles, substations and transformer pads.	NA	351
h. Open and clean all ALS open, flush fixtures, including flasher units, to maintain full light output. Clean all glass-ware, reflectors, color filters, surface lights and flashers.	NA	352
i. Check all main power switching equipment	NA	Order 6950.18A
j. Inspect all relays	NA	353
k. Service timer motor and timer contacts	NA	354
l. Check number and elevation angle data at each station	NA	355
205. EVERY 3 YEARS.		
a. Check insulation resistance and continuity of all main power and control cables. Record all measurements and compare with previous readings. Use FAA Form 6000-8 or equal.	Order 6950.22	Order 6950.22

TECHNICAL PERFORMANCE RECORD — CONTINUATION OR TEMPORARY RECORD/REPORT FORM

FACILITY: ALSF-1 (ATCT, FSS, ARTCC, VOR, LOC, ETC.)
DATES: FROM TO
SUPERVISOR'S SIGNATURE:
LOCATION (CITY, STATE, AIRPORT, OTHER):
EQUIPMENT (A/G, DF, COMPONENTS, ETC.): WESTINGHOUSE FA-4404
FREQ.:

DATE	TIME	INPUT KW	OUTPUT VOLTAGE REG 1	OUTPUT VOLTAGE REG 2	OUTPUT VOLTAGE REG 3	FLASHER INPUT VOLTAGE	FLASHER OUTPUT VOLTAGE	LOAD MONITOR LOOP 1 B5	LOAD MONITOR LOOP 2 B5	LOAD MONITOR LOOP 3 B5	ALSF B5 ETM	FLASHER ETM	HORIZONTAL ALIGNMENT	VERTICAL ALIGNMENT	VISIBILITY OBSTRUCTIONS	VISUAL CHECKS				REMARKS	INITIALS
NOMINAL			1480	1150	1260	240	240	0	0	0			✓	✓	✓	✓					

FAA Form 6000-8 (3-76) FORMERLY FAA FORM 418-24

Figure 5-1. Sample FAA Form 6000-8. (Sheet 2 of 2)

k. Vertical Alignment. Identify a column as "Vertical Alignment" and use this column to indicate if the system meets standards. A check mark (√) means the system meets standards.

l. Visibility Obstructions. Identify a column as "Visibility Obstructions" and use this column to indicate if the system meets standards. A check mark (√) means the system meets standards. If an obstruction is noted, enter a description in the remarks column and record an (X) until the obstruction is removed.

m. Visual Checks. Identify a column as "Visual Checks," and use this column to indicate if the overall system condition and performance is normal. A check mark (√) means the system condition and performance is normal. If abnormal conditions are noted, enter a description in the remarks column, and record an (X) until condition is corrected.

n. Remarks. Make technical comments in the remarks column.

o. Initial. Initials of technician making entries.

288.-293. RESERVED.

Subsection 1. HIGH-INTENSITY ALS SYSTEMS

294. VISUAL CHECKS.

a. Purpose. This procedure verifies visually the operational status and condition of the system.

b. Procedure. Request air traffic (AT) personnel to turn on the ALS and operate the system through brightness steps 1 through 5. Observe system operation on all brightness steps and record all lamp failures or monitor alarms. Verify that the brightness step indicator lights indicate the proper step. Verify operation in both modes of dual mode systems.

295. METER READINGS.

a. Purpose. These readings are used to establish a record of the normal operating parameters and to provide reference data to be used for preventive maintenance and troubleshooting of the equipment in the event of an equipment failure.

b. Procedure. The following meter readings shall be recorded on the technical record form specified in paragraph 287. If there are no installed meters, use portable instruments. On dual mode systems, record the following meter readings when operating in the ALSF mode.

(1) Input voltage, on step 4 with flashers on.

(2) Input kilowatts, on step 4 with flashers on.

(3) Output current of each series loop on each step.

(4) Output voltage for each loop on step 5.

* (5) Flasher control input voltage with flashers on high brightness. *

(6) Load monitor microamperes or voltage for each loop while operating on step 5. (Record readings from panel-mounted meter.)

(7) Elapsed time meter(s) for steady-burning lights.

(8) Elapsed time meter for flashers.

c. Compare all readings with previous readings and investigate difference. A change may be an indication of impending failure. If readings are beyond tolerance, determine the cause and correct as required.

296. ALS MONITOR CHECK.

a. Single Mode Systems.

(1) Steady-Burning Lights Monitor.

(a) Purpose. This check ensures the normal operation of the monitor system.

(b) Procedure. Turn the substation on from the remote position. The monitor should alarm. After a delay of a few seconds the buzzer will stop and the monitor lights should come on.

(2) Steady-Burning Lights Load Monitor.

(a) Purpose. This check verifies normal operation of the system with five lights out. It also validates an alarm operation when six lights are out.

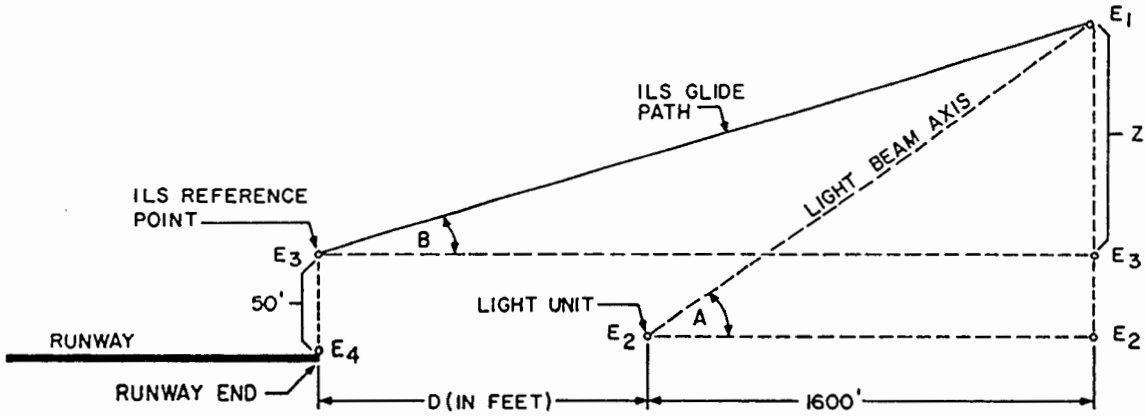

E_1, E_2 ELEVATION OF POINTS DESIGNATED.
E_3 ELEVATION OF ILS REFERENCE POINT
E_4 RUNWAY END ELEVATION AT CENTERLINE
A ANGULAR ELEVATION OF BEAM AXIS
B ILS GLIDE PATH ANGLE
D HORIZONTAL DISTANCE OF LIGHT UNIT FROM RUNWAY END

$E_3 = E_4 + 50$

$E_1 = E_3 + Z = E_3 + \text{TAN } B \times (D + 1600)$

$\text{TAN } A = \frac{E_1 - E_2}{1600}$

NOTE:
ALL LIGHTS IN A LIGHT BAR SHALL HAVE THEIR BEAM AXES AT THE SAME ANGULAR ELEVATION.

Figure 5-3. Calculation of Light Beam Angular Elevation (Systems Installed from May 29, 1969 to December 17, 1981)

Table 5-1. Elevation-Setting Angles for Q20A/PAR-56 Approach Lighting Lamps (ALSF-2) (Systems Installed After December 17, 1981)

Station	*Setting Angle (Degrees)*	*Station*	*Setting Angle (Degrees)*
3000	8.0	1400	7.0
2900	7.9	1300	6.9
2800	7.9	1200	6.9
2700	7.8	1100	6.8
2600	7.7	1000	6.7
2500	7.7	900	6.7
2400	7.6	800	6.6
2300	7.6	700	6.5
2200	7.5	600	6.5
2100	7.4	500	6.4
2000	7.4	400	6.3
1900	7.3	300	6.3
1800	7.2	200	6.2
1700	7.2	100	6.2
1600	7.1	0	6.1
1500	7.0		

300. FLASHING RATE.

a. Purpose. This procedure verifies visually that the flashing rate of the flashing lights meets requirements.

b. Procedure. The flashers are designed to flash at 120 flashes per minute or 2 flashes per second. To determine the flash rate per minute, with system operating use a suitable timing device and count the number of flashes occurring in one minute.

301.-305. RESERVED.

Subsection 2. MEDIUM-INTENSITY APPROACH LIGHTING SYSTEMS

* **306. OPERATIONAL CHECKS.**

a. Purpose. This procedure verifies the status of the system, and the operation of the local and remote control equipment.

b. Discussion. The order of depressing switches must be followed exactly for the MALSR to operate as indicated. The procedure should start with the system turned off.

c. Test Equipment Required. None.

d. Conditions. This test will require equipment down-time and therefore must be coordinated with the air traffic control supervisor. It must be performed when the controlled lighting aids can be clearly observed.

To obtain proper and consistent results the equipment must be set-up properly when starting the checks. This is achieved by pressing MALS 1, RAIL ON, MALS OFF, RAILS OFF, then proceeding with the checks.

e. Procedure.

(1) At the switch assembly cabinet, turn the steady burning lights on in low intensity by depressing G/G and MALS 1. Flashers should remain off.

(2) Change the lights to medium intensity by depressing MALS 2.

(3) Change the lights to high intensity by depressing MALS 3.

(4) Turn the flasher lights on by depressing RAIL ON. (The lights should be in high intensity.)

(5) With the system still in G/G mode, turn the steady burning and flasher lights off by depressing MALS OFF and RAIL OFF.

(6) Place the system in air-to-ground mode by depressing A/G.

(7) Using a transmitter located at least 1 mile away, turn the steady burning and flasher lights on at low intensity by keying the transmitter three times (transmitting three bursts of carrier energy) within a 5-second period of time.

(8) Change the lights to medium intensity by keying the transmitter five times within a 5-second period.

(9) Change the lights to high intensity by keying the transmitter seven times within a 5-second period.

(10) With the system remaining in A/G mode, let it time-out and the lights turn off. This should take approximately 15 minutes.

(11) Place the system in G/G mode by depressing the G/G switch. If the system has an interface unit attached, the steady burning and flasher lights will come on in high intensity. Otherwise the system will stay turned off.

(12) If the system is turned off, turn on the steady burning and flasher lights, in high intensity, by depressing the RAIL ON and MALS 3 switches.

(13) Change the lights to medium intensity by depressing the MALS 2 switch.

(14) Change the lights to low intensity by depressing the MALS 1 switch.

(15) Turn the lights off by depressing the MALS OFF switch.

(16) This completes the remote radio operational control check.

(17) Return the system to normal operation, and make an appropriate entry in the station log, form 6600-6. *

307. METER READINGS.

a. Purpose. These readings establish a record of the normal operating parameters and provide reference data to be used for preventive maintenance and troubleshooting of the equipment in the event of an equipment failure.

b. Procedure.

(1) Record the following meter readings on the technical performance record form specified in paragraph 287.

(a) Control cabinet input voltage.

(b) Control cabinet input line current.

* (c) Voltage to steady-burning lamps. (Measure at transformer output.) *

(d) Flasher control cabinet input voltage, if separate from MALS.

(e) Control cabinet output voltage to flasher lamp assemblies.

(2) Compare all readings with previous readings and investigate the difference. A significant change may be an indication of impending failure. If readings are beyond tolerance, determine the cause and correct as required.

308. VERTICAL AND HORIZONTAL ALIGNMENT.

a. Purpose. These checks ensure that the vertical and horizontal alignment of the steady-burning and the flashing lights meet the operational requirements specified in chapter 3.

b. Procedure.

(1) Vertical Alignment.

(a) From the light bar identification (sign or site drawings), obtain the proper angle setting for the steady-burning lights on the light bar being inspected. All steady-burning lights on a particular bar shall be aimed at the same vertical angle.

NOTE: To determine the vertical angle setting for systems installed after December 17, 1981, per Order 6850.2A, use table 5-2. Table 5-2 provides the vertical angle for the PAR-38 MALS steady-burning lights with a glide slope of 3°. If the glide slope is shifted from 3°, the elevation angle of the steady-burning lights shall be shifted by the amount that the glide slope is shifted from 3°. For systems installed prior to December 17, 1981, per Order 6850.2, all lights shall be aimed at the locally established vertical angle as specified on site drawings.

Table 5-2. Elevation-Setting Angles for 150 PAR-38/SP Approach Light Lamps (MALS)

Station	*Setting Angle (Degrees)*
0	3.1
200	3.2
400	3.3
600	3.4
800	3.4
1000	3.5
1200	3.6
1400	3.7

(b) Install the aiming device on the light fixture per manufacturer's instruction for the aiming device being used.

NOTE: Aiming device number 4611 is used to aim the MALS PAR-38 lamps. To set the vertical angle, adjust the pointer of the aiming device on the protractor segment to the angle specified on the site drawings for the station being adjusted (the angle stenciled at that station). Place the aiming device over the lamp and adjust the vertical position by centering the bubble. If a different aiming device is used, follow the manufacturer's instructions for vertical alignment.

(c) Check the vertical angle setting of each of the steady-burning lights.

NOTE: For vertical angular adjustment of lights mounted on low-impact-resistance (LIR) towers, follow the tower manufacturer's instructions.

(d) Adjust the light fixtures as necessary to meet the requirement as specified in chapter 3.

(e) Check the vertical angle setting of each of the SFL units by using the built-in inclinometer or an aiming device designed for the SFL head.

NOTE: All sequence flashing lights shall be aimed at 6° in all circumstances.

(2) Horizontal Alignment.

(a) All lamps should project a light beam parallel to the extended centerline of the runway.

(b) Visually inspect each of the steady-burning light fixtures to determine its position relative to other light fixtures in the same bar. Use adjacent lamps or the mounting bar as a reference to determine the relative horizontal position of individual lamps.

(c) If a light is askew, adjust the light as required to provide the proper horizontal beam angle.

NOTE: On LIR towers, follow the adjustment procedure in the manufacturer's instruction manual for horizontal lamp alignment.

309.-313. RESERVED.

Subsection 3. ODALS AND LDIN SYSTEMS

314. VISUAL CHECKS.

a. Purpose. This check verifies visually the operational status and condition of the ODALS or LDIN system.

b. Procedure. Observe system operation on all brightness steps. Log lamp failures and note the flashing (or strobe) rates. Verify that all lamps are operating and the controls operate as designed.

315. OPERATIONAL CHECKS.

a. Purpose. This check verifies proper operation of the ODALS or LDIN system from both the local and remote control panels.

b. Procedure.

(1) ODALS

(a) Request air traffic (AT) personnel to relinquish control of the ODALS system.

(b) With the ODALS under local control, rotate the local control switch in the control unit from OFF to LOW, OFF to MEDIUM, OFF to HIGH. The intended intensity level of the strobe lights should be reached within 1.5 seconds.

(c) With the ODALS operating at low intensity, rotate the control switch to MEDIUM and then to HIGH. The indicated intensity level of the strobe lights should be reached within 1.5 seconds.

(d) Observe the ODALS operation. All strobe lights should be at the selected intensity level and should operate sequentially from the outermost strobe light. The cycle should repeat once per second.

(e) Request ODALS operation in the remote (auto) mode. Observe the ODALS operation and verify operation as specified in steps (b), (c), and (d) above.

* (f) At the switch assembly cabinet, turn the lights on with low intensity by depressing G/G and ODALS 1.

(g) Change the lights to medium intensity by depressing ODALS 2.

(h) Change the lights to high intensity by depressing ODALS 3.

(i) Turn the lights off by depressing ODALS OFF.

(j) Put the system in air-to-ground mode by depressing A/G.

(k) Using a transmitter located at least a mile away, turn the lights on with low intensity by keying the transmitter three times (transmitting three bursts of carrier energy) within a 5-second period of time.

(l) Change the lights to medium intensity by keying the transmitter five times within a 5-second period.

(m) Change the lights to high intensity by keying the transmitter seven times within a 5-second period.

(n) Let the system time-out and the lights turn off by leaving it in A/G mode. This should take approximately 15 minutes.

(o) Place the system in ground-to-ground mode by depressing G/G. If the system has an interface unit attached, the lights will come on in high intensity. Otherwise the system will stay turned off. *

* (p) If the lights are off, turn them on with high intensity by depressing ODAL 3.

(q) Change the lights to medium intensity by depressing ODALS 2.

(r) Change the lights to low intensity by depressing ODALS 1.

(s) Turn the lights off by depressing ODALS OFF.

(t) This concludes the checks.

(u) Return the system to normal operation. *

(2) LDIN

(a) Request air traffic (AT) personnel to relinquish control of the LDIN system.

(b) Operate the system from both the local and remote control panels, if applicable; select each control function; and verify that the system operates as designed. If the system operation is monitored, verify monitor operation. Refer to the manufacturer's instruction book for recommended operational checks.

316. METER READINGS.

a. Purpose. These readings verify that the input voltage is correct, establish a record of the normal operating parameters, and provide reference data to be used for preventive maintenance and troubleshooting of the equipment.

b. Procedure.

(1) ODALS. Using portable instruments measure and record the normal operating parameters listed in the manufacturer instruction book. Record the readings on the technical performance form specified in paragraph 287.

(2) LDIN. Using portable instruments measure and record the normal operating parameters specified in the manufacturer instruction book. Record the readings on the Technical Performance Record specified in paragraph 287.

317.-319. RESERVED.

Subsection 4. VASI AND PAPI

320. VISUAL CHECKS.

a. Purpose. This check verifies visually the operational status and condition of the system.

b. Procedure.

(1) With the system operating, visually inspect each lamp housing assembly (LHA) to verify that all lamps are on.

(2) Visually inspect each LHA for obvious vertical and/or horizontal misalignment. If misaligned, see paragraph 324.

(3) Refer to paragraph 170b for supplemental visual checks.

321. CONTROLS.

* **a. Purpose.** This procedure verifies proper operation of the system controls. *

* **NOTE:** Some types of controls may not be installed at all sites.

b. Procedure.

(1) Photocell Control.

(a) With system operating during daylight hours (high intensity), cover the photocell with black paper, cloth, etc. to exclude all light. After a short time delay, the lights should switch from high to low intensity (nighttime mode).

(b) Remove the cover from the photocell. After a short time delay, the lights should switch back to the high intensity (daylight) mode.

(2) Remote Tower Control.

(a) Coordinate with air traffic (AT) personnel to request that the system be turned on. *

* (b) Request tower personnel to operate the system on both brightness levels. Observe and verify normal system operation.

(3) Local control. Obtain local control and switch through all brightness steps. Observe and verify normal operation.

(4) Landline control. Operate the system from both the local and remote control panels, if applicable. Select each control function, and verify that the system operates as designed.

(5) Ground-to-ground control. Operate the system from both the local and remote control panels, if applicable. Select each control function, and verify that the system operates as designed.

(6) Air-to-ground control. Switch to air-to-ground control. Use a transmitter located at least 1 * mile or as far as practicable from the facility to control the system. Turn the system on and observe operation while selecting each control function. *

322. METER READINGS.

a. Purpose. These readings establish a record of the normal operating parameters and provide reference data to be used for preventive maintenance and troubleshooting of the equipment in the event of an equipment failure.

b. Procedure.

(1) Measure the following system parameters. Record readings on the technical performance record form specified in paragraph 287. If there are no installed meters, use portable instruments for the readings.

2 Set the leveling device dial to 0°.

3 With equal size blocks inserted under the channel of the aiming device bar near each end, the bubble should appear very near or at the center of the level tube.

4 Rotate the aiming device 180° on the blocks. The bubble should appear at the same relative position in the level tube.

5 If the bubble is not centered within two divisions on the level tube (each division is 1.2 minutes), recalibrate the device by adjusting the level tube until the bubble appears centered with the level dial at 0°.

6 The angular adjustment dial is now precisely calibrated.

(g) Vertical Alignment for Maximum Light Intensity Through the Aperture. The light meter and tripod are used to adjust the vertical alignment of the lamps for the maximum intensity through the aperture of the lamp housing assembly. Two light meters and tripods are required at each sector maintaining VASI systems. After an individual lamp replacement, an interim check for uniform lamp intensity is to visually inspect the LHA light output from approximately 700 feet downwind. Adjust the lampholders as required for uniform light output with maximum intensity.

1 Systems Having Individual Lampholder Adjustments. Remove the power from the lamp housing assembly (LHA). Disconnect the electrical wires from two of the lamps. Place and tape the light meter on the tripod. Place the light meter and tripod directly in front of the lamp that is electrically connected. Adjust the height until the light meter is at the height of the aperture. Place the tripod and light meter as close as possible to the aperture. If possible, place the meter partially into the aperture, but not touching the LHA. This position decreases the amount of background light read by the meter. Reapply power to the LHA and adjust the vertical alignment of the lampholder to obtain the maximum intensity. Tighten any loose alignment adjustment hardware. Remove power from the LHA and then disconnect the electrical wires from the lamp that was adjusted. Reconnect the electrical wires to one of the other unadjusted lamps. Move the light meter and tripod opposite this lamp, and repeat the procedure. Remove power from the LHA and disconnect the electrical wires from the second adjusted lamp and reconnect the electrical wires to the third lamp. Repeat the alignment procedure. Remove power from the LHA and reconnect the electrical wires to the other two aligned lamps. All three lamps should now be properly aligned for maximum intensity. Use this procedure for each of the other LHA's.

2 Systems Not Having Individual Lampholder Adjustments. Place and tape the light meter on the tripod. Place the light meter and tripod in front of the LHA at the center of the aperture. Adjust the height until the light meter is at the height of the aperture. Place the tripod and meter as close as possible to the aperture. If possible, place the meter partially into the aperture, but not touching the LHA. This position decreases the amount of background light read by the meter. The maximum light intensity through the aperture occurs when the lamps are tilted downward approximately 1.8° from the center line of the lamps and the aperture. This small change of 1.8° will increase the intensity by approximately 56 percent from zero-degree tilt. The alignment of the lamps is dependent upon the position of the bulkhead. Remove either the bolts or screws at the top or bottom where the bulkhead is fastened to its mounting brackets. The entire bulkhead can be repositioned from the vertical allowing the lamps to tilt downward. Site adaptation may be required for each system. With the lamps on, monitor the light meter, and tilt the bulkhead to produce the maximum light intensity through the aperture. Use washers as shims to reposition the bulkhead. Site adaptation may be required for each LHA. After repositioning the bulkhead, replace mounting hardware. Repeat the procedure for other LHA's.

(4) Check the vertical alignment of the PAPI lamp housing assemblies and adjust if necessary. Refer to the PAPI manufacturer's instruction manual for proper use of the PAPI aiming device and the alignment procedures.

325.-328. RESERVED.

Subsection 5. REIL

* **329. VISUAL AND OPERATIONAL CONTROL CHECKS.**

a. Purpose. This procedure verifies system status and checks operation of the controls for the REIL.

NOTE: Some types of controls may not be installed at all sites.

b. Procedure.

(1) Control from ATC tower.

(a) Request air traffic control personnel to turn on the system.

(b) Verify that both lamps are on.

(c) Request operation on all brightness levels.

(d) Verify that both lamps operate on each level.

(2) Control from the switch assembly cabinet.

(a) Turn the lights on with low intensity by depressing G/G and REIL 1.

(b) Change the lights to medium intensity by depressing REIL 2.

(c) Change the lights to high intensity by depressing REIL 3.

(d) Turn the lights off by depressing REIL OFF.

(3) Air-to-ground control.

(a) Place the system in air-to-ground mode by depressing A/G.

(b) Using a transmitter located at least a mile away, turn the lights on with low intensity by keying the transmitter three times (transmitting three bursts of carrier energy) within a 5-second period of time.

(c) Change the lights to medium intensity by keying the transmitter five times within a 5-second period.

(d) Change the lights to high intensity by keying the transmitter seven times within a 5-second period.

(e) Leave the system in A/G mode until it times-out and the lights turn off. This should take approximately 15 minutes.

(4) Switch assembly control.

(a) Place the system in ground-to-ground mode by depressing G/G. If an interface unit is attached, the lights will come on in high intensity. Otherwise the system will remain turned off.

(b) If the system is turned off, turn it on with lights in high intensity by depressing REIL 3.

(c) Change the lights to medium intensity by depressing REIL 2.

(d) Change the lights to low intensity by depressing REIL 1.

(e) Turn the lights off by depressing REIL OFF.

(f) This completes the test.

(g) Return the system to normal operation. *

330. VERTICAL AND HORIZONTAL ALIGNMENT.

a. Purpose. These checks ensure that the vertical and horizontal alignment of the REIL lights meet the operational requirements specified in chapter 3.

b. Discussion. The light units shall be aimed at an angle of 10° vertically and toed outward from a line parallel to the runway centerline 15°. Baffles should not be used unless warranted by user complaints of blinding effects and/or flight inspection findings. In these cases, baffles may be installed as a system option without the necessity for NCP (National Change Proposal) action. Where baffles are installed, the light units shall be aimed at an angle of 3° vertically and toed outward 10°. Systems installed with baffles should not be changed unless warranted by user complaints and/or flight inspection findings, or as needed due to snow or ice accumulation. Omnidirectional REIL (ODREIL) light units shall be maintained plumb.

c. Procedure.

(1) From site drawings, or as stenciled on the power and control box, determine the designed alignment and elevation angle.

(2) Visually inspect the horizontal position of each light to verify the lamps are in the position installed.

(3) Adjust the elevation angle using the built-in inclinometer or a suitable aiming device designed for flasher alignment.

(4) Refer to the manufacturer's instructions for alignment procedure for the ODREIL lights.

331. METER READINGS.

a. Purpose. These readings establish a record of the normal operating voltages and provide reference data to be used for preventive maintenance and troubleshooting in the event of an equipment failure.

b. Procedure.

(1) The following meter readings shall be recorded on the technical performance record form specified in paragraph 287.

(2) Measure the input voltage to the power and control cabinet.

(3) Measure the input voltage to each of the flasher lamp assemblies.

NOTE: Refer to the manufacturer's instructions to determine the specific terminal location.

332. MONITOR OPERATION.

a. Purpose. This check verifies monitor operation if the REIL system is so equipped.

b. Discussion. Some systems are designed so that if one light fails, both lights will shut off. There is no monitoring requirement for the REIL. It is not required that both lights automatically shut off in the event of failure of one light, per Order 6850.2A.

c. Procedure.

(1) This test is to be performed only on applicable systems.

(2) Coordinate this test with air traffic control.

(3) Open the door to unit No. 1; system should shut down.

(4) If the system is equipped with a remote monitor, verify its operation.

333.-334. RESERVED.

338. LAMP REPLACEMENT.

a. Purpose. This check visually inspects the lamps to determine their usefulness and replaces the lamps as conditions indicate.

b. Discussion. Maintenance personnel should always ensure that the proper size and type of lamp is provided for each receptacle and is properly focused. If any lamp, even though still burning, appears near failure, it should be replaced immediately. Good judgement should be exercised so that lamps having a remaining useful life are not prematurely replaced.

c. Procedure. Inspect the lamps and replace them under the following conditions.

(1) When the interior of high wattage lamps has blackened appreciably from the top to about three-fourths inch above the top of the filament. (This necessitates replacement regardless of filament conditions, because the blackening of the glass materially decreases the light output.)

(2) When the lamp has been blistered from reflected sun rays or other causes.

(3) When there is excessive sagging of the filament or broken fused filament supports.

(4) When rated lamp life has been attained. When replacing lamps in major apparatus such as beacons, the date the lamps are installed in the operating receptacle shall be recorded in facility maintenance log and retained at the facility. This will be a ready reference, indicating to maintenance personnel the approximate hours of service.

(5) Refer to the manufacturers instruction manual for specific lamp replacement data and adjustment procedures.

NOTE: When replacing a beacon's No. 1 lamp, remove the No. 2 lamp and install it in the No. 1 operating position. Install the new lamp in the No. 2 position. When replacing a lamp, the new lamp shall always be burned for approximately 5 minutes to ascertain that the lamp has operated satisfactorily and that it will not fail after a few minutes of operation.

339. RESERVED.

Subsection 7. WITHDRAWN - CHG 1

340. Withdrawn - CHG 1
341.-344. RESERVED.

Section 2. OTHER MAINTENANCE TASKS PROCEDURES

345. GLASSWARE, REFLECTORS, AND FILTERS.

a. Purpose. This procedure checks the brilliance, color, beam spread, and light visibility of each light in the system.

b. Procedure.

NOTE: Refer to paragraphs 299 and 308 for corrective maintenance procedures.

(1) Visually check the condition of all glassware.

(a) Inspect for cracks, pits, and leaks at the lens edge and for cleanliness.

(b) Inspect all lamps for damage or misalignment.

(c) Look for damaged, missing, or misaligned filters and reflectors. A missing filter constitutes a lamp outage. To prevent pilot confusion, disconnect the affected lamp until filter can be replaced.

(2) Inspect semi-flush lights for visibility.

(a) Semi-flush lights are particularly susceptible to a reduction of light output by relatively small accumulation of snow, sand, mud, leaves, oil film, or other matter which may accumulate in front of the prisms. Prisms should be kept clean by frequent and careful maintenance. Semi-flush fixtures should be carefully cleaned with a broom, compressed air, or a vacuum cleaner.

(b) Airport maintenance personnel should be advised against running snowplow blades over semi-flush fixtures, because of the resulting damage or misalignment.

(3) Clean all glassware, reflectors and filters as required to insure maximum light output. Cleaning of glassware, reflectors, and filters can best be accomplished by applying a liquid glass cleaner and wiping dry with a soft, cotton cloth. Avoid using a strong caustic or abrasive cleaner.

(4) Repair or replace as required any damaged or missing glassware, lamps, reflectors or filters.

346. SUPPORTS.

a. Purpose. This check verifies the reliability and physical condition of the light support structures.

b. Procedure.

(1) Check light supports and guys for rigidity, by grasping them firmly and trying to move the support or guy wire.

(2) Inspect structures for rust, loose paint, or obvious misalignment.

347. TRANSFORMER AND REGULATOR OIL.

a. Purpose. This check determines the oil level and insulating properties of the insulating oil.

b. Procedure.

(1) Inspect the constant current regulator for the proper oil level as indicated by the oil level gauge. The indicator should be approximately in the center of the dial when the oil temperature is 25°C or 77°F.

(2) Inspect the regulator tanks and all oil filled transformers for oil leaks. If leaks exist, repair or replace as necessary. Refer to the manufacturer's instruction book for maintenance procedures.

(3) Check the dielectric strength of the insulating oil by using a Hipotronics, Inc., Model OC-51MG liquid dielectric tester. See the tester instruction book and Order 6950.18A, Maintenance of Electrical Distribution Systems, for the testing procedure.

348. APPROACH LINE-OF-SIGHT CLEARANCE.

a. Purpose. This check insures that the required approach line-of-sight clearance is maintained.

b. Procedure.

(1) Visually inspect the approach zone for obstructions which may have penetrated the approach line-of-sight clearance.

(2) Refer to Order 6850.2A for visibility requirements.

(3) If an obstruction is noted, report it to the proper authority and make an entry on the technical performance record form specified in paragraph 287.

349. TYPE LB-1 LIGHT BASES.

a. Purpose. The following procedures are used to check and remove water, install new incandescent lamps and perform maintenance on semi-flush/frangible flashers installed in the LB-1 light base.

b. Procedure. The LB-1 light base (figure 2-11) is used with the type AL-1 semi-flush approach lights, the frangible approach lights, and with the semi-flush/frangible flasher lights. Although the base was designed to be waterproof, ground and surface water will find a way in. Water accumulation can be a serious problem and for that reason the bases must be checked periodically or as required by local conditions.

*U.S. GOVERNMENT PRINTING OFFICE:1996-769-016/20129