CHANGE

U.S. DEPARTMENT OF TRANSPORTATION
FEDERAL AVIATION ADMINISTRATION

6850.5C
CHG 5

7/25/2002

SUBJ: MAINTENANCE OF LIGHTED NAVIGATIONAL AIDS

1. PURPOSE. This change specifies the applicability of the lamp power requirements identified in this handbook Section 2 paragraph 24. This directive implements Configuration Control Decision (CCD) No. N23777, Change Order 6850.5C, Section 2, Obstruction Lights, paragraph 24, b to allow the use of Light Emitting Diode (LED) lamps.

2. DISTRIBUTION.

a. This directive is distributed to selected offices and services within Washington headquarters, the William J. Hughes Technical Center, the Mike Monroney Aeronautical Center, regional Airway Facilities divisions, and Airway Facilities field offices having the following facilities/equipment: ALS, LDIN, MALS, MALSR, ODALS, PAPI, REIL, SALS, SSALR, SSALS, VASI.

b. An electronic version and distribution report of this directive are available on an Intranet site located at **http://aos-ext.amc.faa.gov/** under the "Technical Documentation" heading.

c. To obtain additional hard copies of this publication, contact Printing & Distribution Team, AMI-700B, at (405) 954-3771.

3. DISPOSITION OF TRANSMITTAL. Retain this transmittal.

PAGE CONTROL CHART

Remove Pages	Dated	Insert Pages	Dated
31	3/27/95	31	3/27/95
32	3/27/95	32	7/25/2002

Thu Jul 2002 07/25/02 15:53:27

Gregg W. Dvorak
Program Director for Operational Support

Distribution: Selected Airway Facilities Field and Regional Offices, ZAF-603

Initiated By: AOS-240

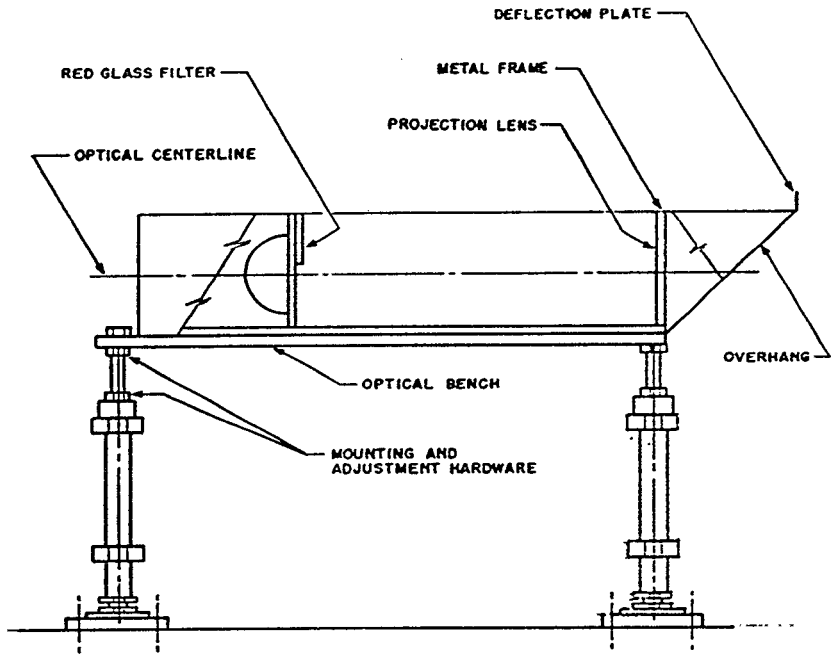

Figure 2-31. PAPI Light Box

Section 2. OBSTRUCTION LIGHTING

21. PURPOSE OF OBSTRUCTION LIGHTING.

Lighting a structure alerts airmen to its presence during both daytime and nighttime conditions. Whenever obstruction lights are displayed on any structure, they should be of sufficient intensity and installed in a manner to draw the attention of pilots approaching the obstruction from any normal angle and at any altitude up to 1500 feet above the obstruction. Obstruction lighting may be displayed in addition to marking (paint) for daytime operation, provided such lights more adequately warn airmen of the obstruction.

22. TYPES.

Red obstruction lights are used during the hours of darkness, during periods of limited daytime illuminance, and/or during reduced visibility. High-intensity white lights are used for both daytime and nighttime conditions, however the intensity may be reduced at night. Although red obstruction lighting systems and aviation surface orange-and-white point meet the minimum obstruction marking and lighting standards, the high-intensity white lights are far more effective and may be used in lieu of red obstruction lights. Obstruction lighting may be displayed on structures in any of the following combinations:

a. Aviation Red Obstruction Lights. Flashing aviation red beacons and steady-burning aviation red lights are used during nighttime operation.

b. High-Intensity White Obstruction Lights. Flashing high-intensity white lights should be used during daytime and twilight, and with reduced intensity for nighttime operation. When this type system is used, the marking of structures with red obstruction lights and aviation orange-and-white paint may be omitted.

c. Dual Lighting. A combination of flashing aviation red beacons and steady-burning aviation red lights may be used for nighttime operation, and flashing high-intensity white lights for daytime operation. Aviation orange-and-white paint may be omitted.

d. High-Intensity Obstruction Lights, Twilight/-Nighttime Only. Flashing high-intensity white lights may be used for twilight and nighttime operation, with aviation orange-and-white paint used for daytime marking. Obstruction lighting criteria and specification data may be obtained in Advisory Circular AC 70/7460-1F, Obstruction Marking and Lighting.

23. OBSTRUCTION LIGHT MONITORING.

Obstruction lighting should be visually observed at least once each 24 hours. If obstruction lighting is not readily accessible for visual observation, a properly maintained automatic visual or audible alarm indicator should be installed and operated to provide an indication that such lights are functioning properly. This alarm indicator should be designed to register the malfunction of any light on the obstruction. The automatic monitoring alarm indicator should be located in an area generally occupied by facility personnel. The side or intermediate aviation red obstruction lights on an obstruction may be excluded from the alarm circuit, provided the signaling device will indicate malfunctioning of all flashing and rotating beacons and/or high-intensity white lights and of all top lights; and that all obstruction lighting mounted on the obstruction is visually inspected at least once every 2 weeks.

24. AVIATION RED OBSTRUCTION LIGHTS.

* NOTE: All lamp power requirements (wattage) in this handbook Chapter 2, Section 2, paragraph 24 applies only to incandescent lamps (not approved LED lamp replacements). *

a. Flashing Red Hazard Beacon. This 300mm flashing beacon, figure 2-32, consists of two simultaneously flashing incandescent lamps of at least 620 watts with aviation red color filters. The steady-burning intensity should not be less than 2,000 candelas (in red). The flashing mechanism should produce not more than 40 flashes per minute nor less than 12 flashes per minute with a period of darkness equal to approximately one-half the luminous period. If the obstruction is located within 15,000 feet of a landing area, the flashing frequency should be at least 20 flashes per minute.

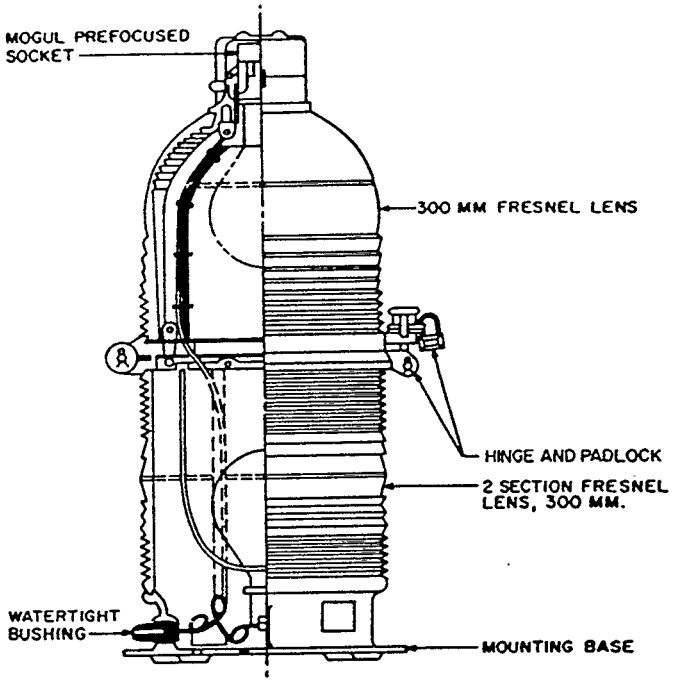

Figure 2-32. Flashing Red Hazard Beacon