ERRATA SHEET

SUBJECT: Change 1 to FAA Order JO 7110.65W, Air Traffic Control, effective May 26, 2016

This errata sheet transmits the revised pages to the subject order.

REMOVE PAGE	DATED	INSERT PAGE	DATED
E of C−1 through E of C−3	05/26/16	E of C−1 through E of C−3	05/26/16
3−9−5 and 3−9−6	05/26/16	3−9−5 and 3−9−6	05/26/16
3−9−9 and 3−9−10	05/26/16	3−9−9 and 3−9−10	05/26/16
4−3−1 through 4−3−8	05/26/16	4−3−1 through 4−3−8	05/26/16
5−1−1 and 5−1−2	05/26/16	5−1−1 and 5−1−2	05/26/16
5−4−3 through 5−4−6	05/26/16	5−4−3 through 5−4−6	05/26/16
PCG B−1 and PCG B−2	05/26/16	PCG B−1 and PCG B−2	05/26/16
BG−1 through BG−3	05/26/16	BG−1 through BG−3	05/26/16
BG−19 through BG−51	05/26/16	BG−19 through BG−51	05/26/16

Attachment

Explanation of Changes
Change 1

Direct questions through appropriate facility/service center office staff to the Office of Primary Interest (OPI)

a. 1-1-9. REQUESTS FOR INTERPRETATIONS OR CLARIFICATIONS

This change adds processes for requesting interpretations or clarifications pertaining to FAA Order JO 7110.65 content.

b. 1-2-6. ABBREVIATIONS
2-3-10. CONTROL SYMBOLOGY
2-4-17. NUMBERS USAGE
2-5-2. NAVAID TERMS
2-5-3. NAVAID FIXES
3-3-2. CLOSED/UNSAFE RUNWAY INFORMATION
3-7-5. PRECISION APPROACH CRITICAL AREA
4-1-1. ALTITUDE AND DISTANCE LIMITATIONS
4-6-4. HOLDING INSTRUCTIONS
4-7-5. MILITARY TURBOJET EN ROUTE DESCENT
4-7-13. SWITCHING ILS/MLS RUNWAYS
5-1-13. RADAR SERVICE TERMINATION
5-9-2. FINAL APPROACH COURSE INTERCEPTION
5-9-4. ARRIVAL INSTRUCTIONS
5-9-5. APPROACH SEPARATION RESPONSIBILITY
5-9-6. SIMULTANEOUS DEPENDENT APPROACHES
5-9-9. SIMULTANEOUS OFFSET INSTRUMENT APPROACHES (SOIA) – HIGH UPDATE RADAR
5-13-1. MONITOR ON PAR EQUIPMENT
5-13-3. MONITOR INFORMATION
13-1-8. RECORDING OF CONTROL DATA

Due to lack of MLS and approach procedures in the NAS, this change removes all MLS references.

c. 1-2-6. ABBREVIATIONS

This change adds the abbreviation “NOWGT” to the subject paragraph.

d. 2-3-6. AIRCRAFT TYPE

This change deletes the contents of Appendices A, B, and C, and redirects the reader to FAA Order 7360.1, Aircraft Type Designators.

e. 2-6-2. HAZARDOUS INFLIGHT WEATHER ADVISORY SERVICE
2-9-3. CONTENT

This change reflects the migration of the En Route Flight Advisory Service responsibilities into the InFlight position and the discontinued use of the term “Flight Watch” within the CONUS and Puerto Rico.

f. 2-6-4. WEATHER AND CHAFF SERVICES

This change adds the requirement for issuing an altitude to maintain when clearing an aircraft to deviate after a crossing altitude had already been issued, including Climb Via or Descend Via clearances on SID/STAR procedures.

g. 2-10-1. EN ROUTE SECTOR TEAM POSITION RESPONSIBILITIES

This change adds oceanic sector teams to the title and deletes subparagraph 2-10-1a2. It also removes the remaining subparagraph designators that are no longer needed.

h. 2-10-2. TERMINAL RADAR/ NONRADAR TEAM RESPONSIBILITIES

This change deletes subparagraph 2-10-2a2 and removes the subparagraph 2-10-2 designators that are no longer needed.

i. 2-10-3. TOWER TEAM RESPONSIBILITIES

This change deletes subparagraph 2-10-3a2 and removes the subparagraph 2-10-3a designators that are no longer needed.

j. 3-3-7. FAR FIELD MONITOR (FFM) REMOTE STATUS UNIT

The MM, or in the absence of a MM, 1/2 mile final and the IM or CAT II Missed Approach Point (MAP) will be used as reference points for the issuance of the localizer reliability advisory.

k. 3-8-1. SEQUENCE/SPACING APPLICATION

This change advises pilots to inform ATC as soon as possible of any delay clearing the runway during their stop-and-go or full stop landing.

l. 3-9-6. SAME RUNWAY SEPARATION

This change makes all the figures consistent with the logic provided in the text. The shaded aircraft in FIG 3-9-3 is moved to be within the confines of the runway, similar to the departure aircraft depicted in FIG 3-9-1 and FIG 3-9-2.

m. 3-9-9. NONINTERSECTING CONVERGING RUNWAY OPERATIONS

This change relocates a subparagraph of 3-9-9, and renumbers the remaining subparagraphs.

n. 3-10-5. LANDING CLEARANCE

This change allows controllers to be clearer with their instructions when controlling aircraft in the traffic pattern while utilizing LUAW procedures. These additional examples will reduce pilot confusion.

o. 4-2-5. ROUTE OR ALTITUDE AMENDMENTS

This change conveys to ATC they cannot modify these restrictions (speed and/or crossing altitudes) since they are needed to ensure obstacle avoidance.

p. 4-3-2. DEPARTURE CLEARANCES

This change clarifies that both textual and graphic ODPs can be assigned by ATC to ensure aircraft separation.

q. 4-7-12. AIRPORT CONDITIONS
4-8-1. APPROACH CLEARANCE
4-8-9. MISSED APPROACH
4-8-10. APPROACH INFORMATION

This change prescribes controller responsibility when informed that a pilot will conduct Cold Temperature Compensation (CTC).

r. 4-8-1. APPROACH CLEARANCE

This change revises the associated FIG 4-8-5 to be consistent with the content.

s. 5-1-3. RADAR USE

This change provides procedural guidance for facilities providing ATC services using ADS-B and WAM as surveillance sources.

t. 5-4-3. METHODS

This change allows the use of the CID as a means for the transferring controller to identify an aircraft in making an intra-facility point out.

u. 5–4–6. RECEIVING CONTROLLER HANDOFF

Changes to this paragraph were inadvertently omitted from the global implementation of the previously vetted FAA Order 7110.311C, into FAA Order 7110.65.

v. 5-6-2. METHODS

This change adds the requirement to issue an altitude to maintain when clearing an aircraft to deviate off of a procedure containing published crossing restrictions except when the aircraft has not yet been cleared to navigate vertically.

w. 5-9-10. SIMULTANEOUS INDEPENDENT APPROACHES TO WIDELY-SPACED PARALLEL RUNWAYS WITHOUT FINAL MONITORS

This change allows controllers to discontinue using 1,000 feet vertical or 3 miles radar separation between aircraft conducting an RNAV (RNP) approach that contains a radius-to-fix (RF) leg and aircraft conducting a straight-in ILS/RNAV with vertical guidance/GLS, or another RNAV (RNP) approach with an RF leg once the aircraft are established on their respective approach procedures.

x. 7-2-1. VISUAL SEPARATION

This change clarifies existing procedures and responsibilities and revises phraseology to ensure understanding of ATC clearances and instructions.

y. 7-4-4. APPROACHES TO MULTIPLE RUNWAYS

This change permits the use of RNAV procedures and direct courses that will intercept the extended centerline of the runway at an angle not greater than 30 degrees, to be used in lieu of radar vectors. This

change also permits use of procedures using radius-to-fix legs that intercept final in lieu of 30-degree intercept provisions otherwise contained in this paragraph.

z. 8-7-3. LONGITUDINAL SEPARATION
8-8-3. LONGITUDINAL SEPARATION
8-9-3. LONGITUDINAL SEPARATION
8-10-3. LONGITUDINAL SEPARATION

This change implements ADS-B ITP to allow climb and descent of appropriately equipped aircraft using reduced separation in the oceanic domain upon pilot request.

aa. 9-1-2. SPECIAL HANDLING

This change increases Air Traffic awareness that aircraft using the call sign FLIGHT VAL will be performing Flight Validation activities that are similar to Flight Check activities, but no additional priority is granted.

ab. 10-2-13. MANPADS ALERT

This change identifies the DEN as the FAA Headquarters office for MANPADS notifications, adds a clarification edit, and a reference to FAA Order JO 7610.4.

ac. 11-1-1. DUTY RESPONSIBILITY
11-1-2. DUTIES AND RESPONSIBILITIES
11-1-3. TIME–BASED FLOW MANAGEMENT (TBFM)

This change incorporates responsibilities for the use of TBFM into FAA Order JO 7110.65. It provides specific directions to facilities as to duties and responsibilities.

ad. 13-1-9. ACKNOWLEDGEMENT OF AUTOMATED NOTIFICATION

This change adds the requirement for the first sector displaying the Embedded Route Text (ERT) coding to issue and acknowledge the ERT coding unless otherwise coordinated or specified in appropriate facility directives.

ae. Appendix A - Aircraft Information Fixed-Wing Aircraft
Appendix B - Aircraft Information Helicopters/Rotorcrafts
Appendix C - Aircraft Information Specific Amateur–Built/Experimental Aircraft

This change directs readers to a new source of aircraft information and deletes Appendices A, B, and C.

af. Entire publication

A global search and replace was conducted on the term “A/FD – Airport/Facility Directory.” This term is now being referred to as “Chart Supplement U.S.”

Additional editorial/format changes were made where necessary. Revision bars were not used because of the insignificant nature of these changes.

FIG 3–9–1
Same Runway Separation
[View 1]

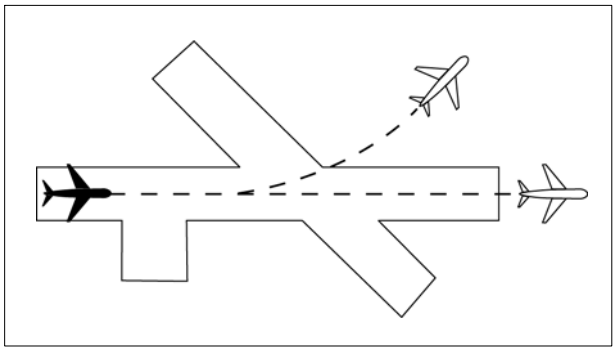

FIG 3–9–2
Same Runway Separation
[View 2]

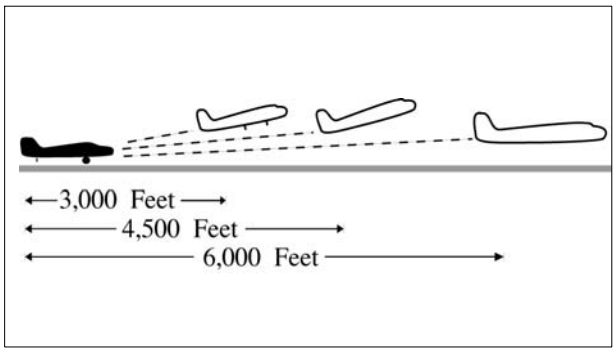

NOTE–
Aircraft same runway separation (SRS) categories are specified in FAA Order JO 7360.1, Aircraft Type Designators and based upon the following definitions:

CATEGORY I – small single–engine propeller driven aircraft weighing 12,500 lbs. or less, and all helicopters.

CATEGORY II – small twin–engine propeller driven aircraft weighing 12,500 lbs. or less.

CATEGORY III – all other aircraft.

b. A preceding landing aircraft is clear of the runway. (See FIG 3–9–3.)

FIG 3–9–3
Preceding Landing Aircraft Clear of Runway

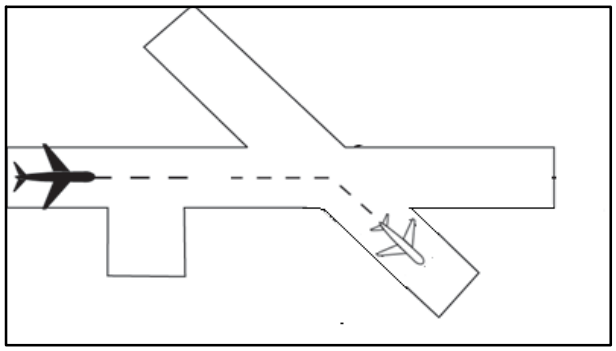

REFERENCE–
P/CG Term– Clear of the Runway.

WAKE TURBULENCE APPLICATION

c. Do not issue clearances which imply or indicate approval of rolling takeoffs by super or heavy aircraft except as provided in Para 3–1–14, Ground Operations When Volcanic Ash is Present.

d. Do not issue clearances to a small aircraft to line up and wait on the same runway behind a departing super or heavy aircraft to apply the necessary intervals.

REFERENCE–
AC 90–23, Aircraft Wake Turbulence.

e. The minima in Para 5-5-4, Minima, subparagraph g, may be applied in lieu of the time interval requirements in subparagraphs f and g. When Para 5-5-4, Minima, is applied, ensure that the appropriate radar separation exists at or prior to the time an aircraft becomes airborne.

NOTE–
The pilot may request additional separation, but should make this request before taxiing on the runway.

f. Separate IFR/VFR aircraft taking off from the same runway or a parallel runway separated by less than 2,500 feet:

NOTE–
Takeoff clearance to the following aircraft should not be issued until the time interval has passed after the preceding aircraft begins takeoff roll.

1. Heavy, large, or small behind super – *3 minutes.*

2. Heavy, large, or small behind heavy – *2 minutes.*

g. Separate a small aircraft behind a B757 by *2 minutes* when departing the same runway.

FIG 3–9–4
Same Runway Separation

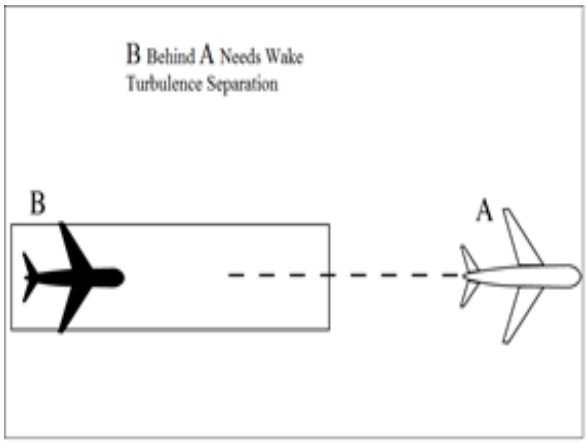

h. Separate aircraft when operating on a runway with a displaced landing threshold if projected flight paths will cross when either a departure follows an arrival or an arrival follows a departure by the following minima:

1. Heavy, large, or small behind super – *3 minutes.*

2. Heavy, large, or small behind heavy – *2 minutes.*

3. Small behind B757 – *2 minutes.*

i. Separate an aircraft behind another aircraft that has departed or made a low/missed approach when utilizing opposite direction takeoffs or landings on the same or parallel runways separated by less than 2,500 feet by the following minima:

1. Heavy, large, or small behind super – *4 minutes.*

2. Heavy, large, or small behind heavy – *3 minutes*

j. Separate a small aircraft behind a B757 that has departed or made a low/missed approach when utilizing opposite direction takeoffs or landings on the same runway by – *3 minutes.*

k. Do not approve pilot requests to deviate from the required intervals contained in subparagraphs f through j.

PHRASEOLOGY–
HOLD FOR WAKE TURBULENCE.

REFERENCE–
FAAO JO 7110.65, Para 3–9–7, Wake Turbulence Separation for Intersection Departures.

l. Separate a small aircraft behind a large aircraft (except B757) that has departed or made a low/missed approach when utilizing opposite direction takeoffs on the same runway by *3 minutes* unless a pilot has initiated a request to deviate from the time interval. In the latter case, issue a wake turbulence cautionary advisory before clearing the aircraft for takeoff. Controllers must not initiate or suggest a waiver of the time interval.

NOTE–
A request for takeoff does not initiate a waiver request.

m. Inform aircraft when it is necessary to hold in order to provide the required time interval.

3–9–7. WAKE TURBULENCE SEPARATION FOR INTERSECTION DEPARTURES

a. Apply the following wake turbulence criteria for intersection departures:

1. Separate a small aircraft weighing 12,500 lbs. or less taking off from an intersection on the same runway (same or opposite direction takeoff) behind a departing small aircraft weighing more than 12,500 lbs. by ensuring that the aircraft does not start takeoff roll until at least *3 minutes* after the preceding aircraft has taken off.

2. Separate a small aircraft taking off from an intersection on the same runway (same or opposite direction takeoff) behind a departing large aircraft (except B757) by ensuring that the aircraft does not start takeoff roll until at least *3 minutes* after the preceding aircraft has taken off.

3. Separate a small aircraft taking off from an intersection on the same runway (same or opposite direction takeoff) behind a departing B757 by ensuring that the aircraft does not start takeoff roll until at least *3 minutes* after the preceding aircraft has taken off.

4. Separate aircraft departing from an intersection on the same runway (same or opposite direction takeoff), parallel runways separated by less than 2,500 feet, and parallel runways separated by less than 2,500 feet with the runway thresholds offset by 500 feet or more, by ensuring that the aircraft does not start take-off roll until the following intervals exist after the preceding aircraft has taken off:

REFERENCE–
FAAO JO 7110.65, Para 5-5-4, Minima, Subparagraph g.

3–9–9. NONINTERSECTING CONVERGING RUNWAY OPERATIONS

a. Separate departing aircraft from an aircraft using a nonintersecting runway when the flight paths intersect by ensuring that the departure does not begin takeoff roll until one of the following exists:

REFERENCE–
FAAO JO 7110.65, Para 2–1–21, Traffic Advisories.

1. The preceding aircraft has departed and crossed the departure runway, or is turning to avert any conflict. (See FIG 3–9–10).

FIG 3–9–10
Intersecting Runway Separation

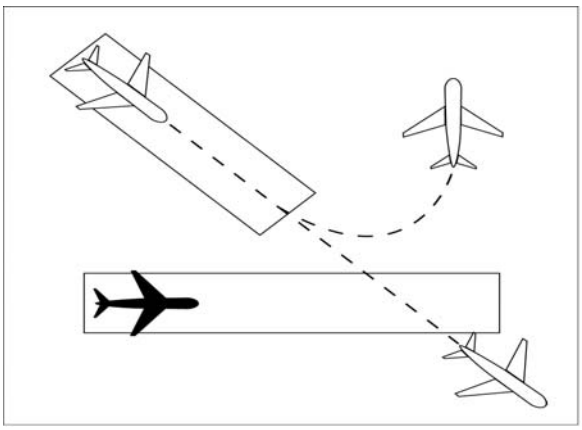

2. A preceding arriving aircraft has completed the landing roll and will hold short of the projected intersection, passed the projected intersection, or has crossed over the departure runway (See FIG 3–9–11 and FIG 3-9-12).

FIG 3–9–11
Intersecting Runway Separation

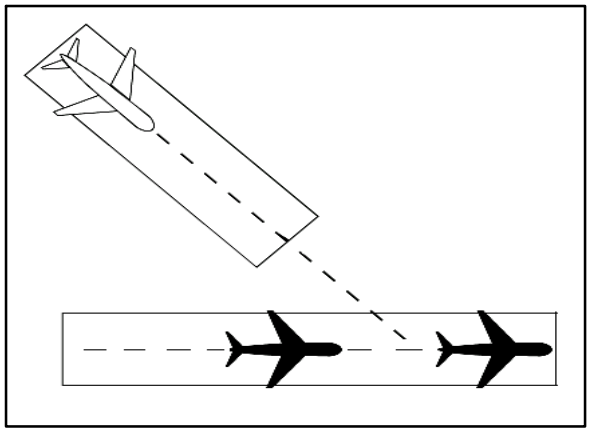

FIG 3–9–12
Intersecting Runway Separation

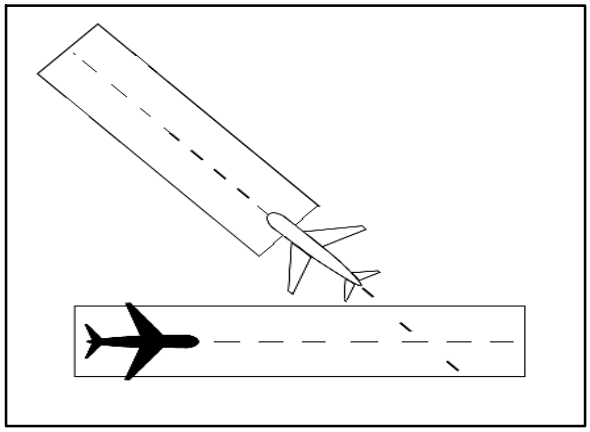

b. If the extended centerline of a runway crosses a converging runway or the extended centerline of a converging runway at a distance of 1NM or less from either departure end, apply the provisions of Paragraph 3–9–8, Intersecting Runway Separation, unless: The facility is using aids specified in a facility directive, (may include but are not limited to, Arrival/Departure Window (ADW), ASDE–X Virtual Runway Intersection Point (VRIP), cut–off points or automation). (See FIG 3–9–15 and FIG 3–9–16).

REFERENCE–
FAAO JO 7210.3, Para 10-3-14, Go-Around/Missed Approach

WAKE TURBULENCE APPLICATION

FIG 3–9–13
Intersecting Runway Separation

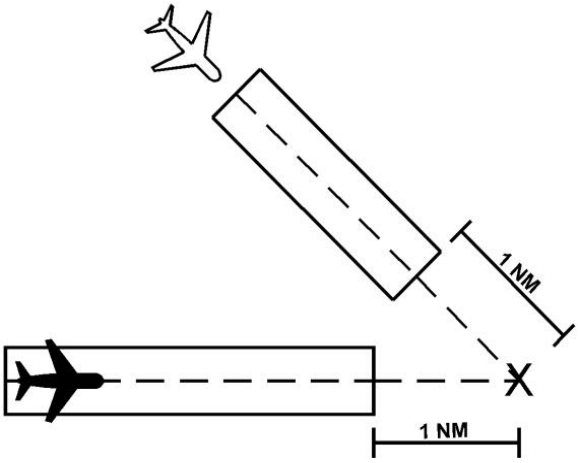

FIG 3–9–14
Intersecting Runway Separation

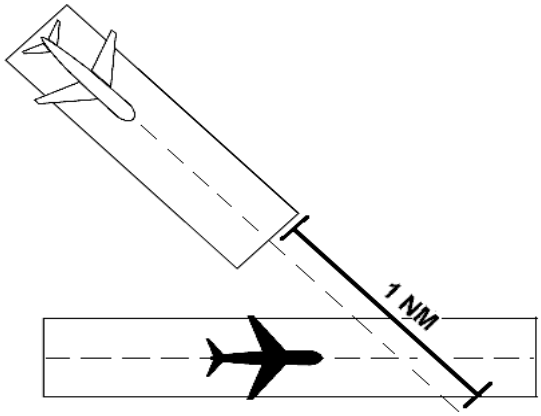

c. Separate IFR/VFR aircraft taking off behind a departing aircraft on a crossing runway if projected flight paths will cross (See FIG 3–9–15):

1. Heavy, large, or small behind super – *3 minutes.*

2. Heavy, large, or small behind heavy – *2 minutes.*

3. Small behind B757 – *2 minutes.*

FIG 3–9–15
Intersecting Runway Separation

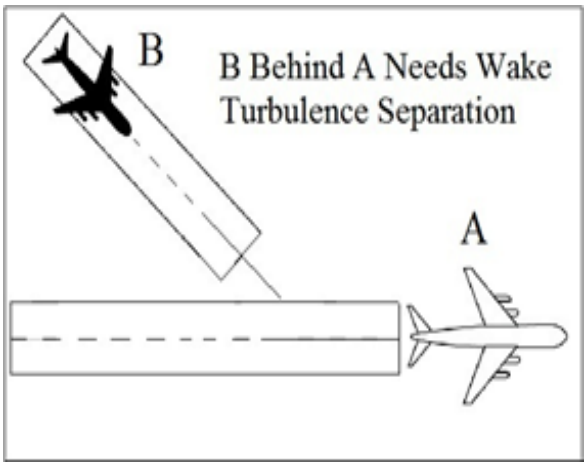

NOTE–
Takeoff clearance to the following aircraft should not be issued until the time interval has passed from when the preceding aircraft began takeoff roll.

d. Separate IFR/VFR aircraft departing behind a landing aircraft on a crossing runway if the departure will fly through the airborne path of the arrival (See FIG 3–9–16):

1. Heavy, large, or small behind super – *3 minutes.*

2. Heavy, large, or small behind heavy – *2 minutes.*

3. Small behind B757 – *2 minutes.*

FIG 3–9–16
Intersecting Runway Separation

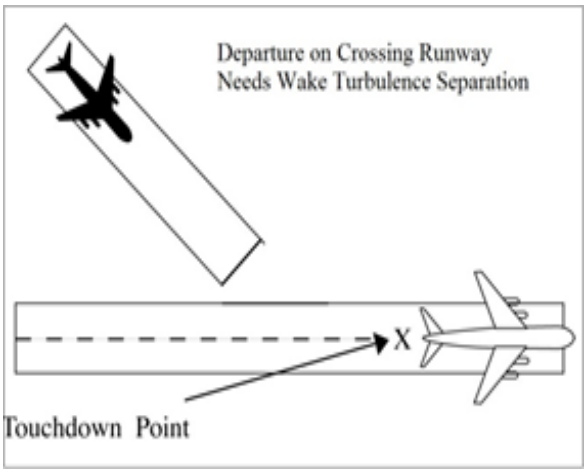

e. Do not approve pilot requests to deviate from the required time interval if the preceding aircraft requires wake turbulence separation.

Section 3. Departure Procedures

4–3–1. DEPARTURE TERMINOLOGY

Avoid using the term "takeoff" except to actually clear an aircraft for takeoff or to cancel a takeoff clearance. Use such terms as "depart," "departure," or "fly" in clearances when necessary.

REFERENCE–
FAAO JO 7110.65, Para 3–9–9, Takeoff Clearance.
FAAO JO 7110.65, Para 3–9–11, Cancellation of Takeoff Clearance.

4–3–2. DEPARTURE CLEARANCES

Include the following items in IFR departure clearances:

NOTE–
When considered necessary, controllers or pilots may initiate read backs of a clearance. Some pilots may be required by company rule to do so.

a. Always include the airport of departure when issuing a departure clearance for relay to an aircraft by an FSS, dispatcher, etc.

b. Clearance Limit.

1. Specify the destination airport when practicable, even though it is outside controlled airspace. Issue short range clearances as provided for in any procedures established for their use.

(a) When the clearance limit is an airport, the word "airport" must follow the airport name.

PHRASEOLOGY–
CLEARED TO (destination) AIRPORT

(b) When the clearance limit is a NAVAID and the NAVAID type is known, the type of NAVAID must follow the NAVAID name.

PHRASEOLOGY–
CLEARED TO (NAVAID name and type)

(c) When the clearance limit is an intersection or waypoint and the type is known, the type must follow the intersection or waypoint name.

PHRASEOLOGY–
CLEARED TO (intersection or waypoint name and type)

2. For Air Force One (AF1) operations, do not specify the destination airport.

NOTE–
Presidential detail is responsible for ensuring the accuracy of the destination airport.

PHRASEOLOGY–
DESTINATION AS FILED.

c. Departure Procedures.

1. Specify direction of takeoff/turn or initial heading/azimuth to be flown after takeoff as follows:

(a) Locations with Airport Traffic Control Service– Specify these items as necessary.

(b) Locations without Airport Traffic Control Service, but within a Class E surface area– specify these items if necessary. Obtain/solicit the pilot's concurrence concerning these items before issuing them in a clearance.

NOTE–
Direction of takeoff and turn after takeoff can be obtained/solicited directly from the pilot, or relayed by an FSS, dispatcher, etc., as obtained/solicited from the pilot.

(c) At all other airports– Do not specify direction of takeoff/turn after takeoff. If necessary to specify an initial heading/azimuth to be flown after takeoff, issue the initial heading/azimuth so as to apply only within controlled airspace.

2. Where an obstacle departure procedure (ODP) has been published for a location and pilot compliance is necessary to ensure separation, include the procedure as part of the ATC clearance.

EXAMPLE–
"Depart via the (airport name)(runway number) departure procedure."
Or
"Depart via the (graphic ODP name) obstacle departure procedure."

NOTE–
Some aircraft are required by 14 CFR 91.175 to depart a runway under IFR using the ODP absent other instructions from ATC.

NOTE–
IFR takeoff minimums and obstacle departure procedures are prescribed for specific airports/runways and published in either a textual, or graphic form with the label (OBSTACLE) in the procedure title, and documented on an appropriate FAA Form 8260. To alert pilots of their existence, instrument approach procedure charts are annotated with a symbol:

3. Do not solicit use of the Visual Climb over Airport (VCOA) option.

NOTE–
Pilots will specifically advise ATC of their intent to use the VCOA option.

4. Compatibility with a procedure issued may be verified by asking the pilot if items obtained/solicited will allow him/her to comply with local traffic pattern, terrain, or obstruction avoidance.

PHRASEOLOGY–
FLY RUNWAY HEADING.

DEPART (direction or runway).

TURN LEFT/RIGHT.

WHEN ENTERING CONTROLLED AIRSPACE (instruction), FLY HEADING (degrees) UNTIL REACHING (altitude, point, or fix) BEFORE PROCEEDING ON COURSE.

FLY A (degree) BEARING/AZIMUTH FROM/TO (fix) UNTIL (time),

or

UNTIL REACHING (fix or altitude),

and if required,

BEFORE PROCEEDING ON COURSE.

EXAMPLE–
"Verify right turn after departure will allow compliance with local traffic pattern,"or "Verify this clearance will allow compliance with terrain or obstruction avoidance."

NOTE–
If a published IFR departure procedure is not included in an ATC clearance, compliance with such a procedure is the pilot's prerogative.

5. SIDs:

(a) Assign a SID (including transition if necessary). Assign a PDR or the route filed by the pilot, only when a SID is not established for the departure route to be flown, or the pilot has indicated that he/she does not wish to use a SID.

NOTE–
Departure procedure descriptive text contained within parentheses (for example, "Jimmy One (RNAV) Departure") is not included in departure clearance phraseology.

PHRASEOLOGY–
(SID name and number) DEPARTURE.

(SID name and number) DEPARTURE, (transition name) TRANSITION.

EXAMPLE–
"Stroudsburg One Departure."
"Stroudsburg One Departure, Sparta Transition."

NOTE–
If a pilot does not wish to use a SID issued in an ATC clearance, or any other SID published for that location, he/she is expected to advise ATC.

(b) If it is necessary to assign a crossing altitude which differs from the SID altitude emphasize the change to the pilot.

PHRASEOLOGY–
(SID name and number) DEPARTURE, EXCEPT CROSS (revised altitude information).

EXAMPLE–
"Stroudsburg One Departure, except cross Quaker at five thousand.

"Astoria Two Departure, except cross Astor waypoint at six thousand.

(c) Specify altitudes when they are not included in the SID.

PHRASEOLOGY–
(SID name and number) DEPARTURE. CROSS (fix) AT (altitude).

EXAMPLE–
"Stroudsburg One Departure. Cross Jersey intersection at four thousand. Cross Range intersection at six thousand." depart

"Engle Two departure. Cross Pilim waypoint at or above five thousand. Cross Engle waypoint at or above seven thousand. Cross Gorge waypoint at niner thousand."

d. Route of flight. Specify one or more of the following:

1. Airway, route, course, heading, azimuth, arc, or vector.

2. The routing a pilot can expect if any part of the route beyond a short range clearance limit differs from that filed.

PHRASEOLOGY–
EXPECT FURTHER CLEARANCE VIA (airways, routes, or fixes.)

e. Altitude. Use one of the following in the order of preference listed. Altitude may be omitted if the top altitude is published in the SID route description.

NOTE–
Turbojet aircraft equipped with afterburner engines may occasionally be expected to use afterburning during their climb to the en route altitude. When so advised by the pilot, the controller may be able to plan his/her traffic to accommodate the high performance climb and allow the pilot to climb to his/her planned altitude without restriction.

REFERENCE–
PCG, Climb Via, Top Altitude

1. To the maximum extent possible, Air Force One will be cleared unrestricted climb to:

(a) 9,000' AGL or higher.

(b) If unable 9,000' AGL or higher, then the highest available altitude below 9,000' AGL.

2. Assign the altitude requested by the pilot.

3. Assign an altitude, as near as possible to the altitude requested by the pilot, and

(a) Inform the pilot when to expect clearance to the requested altitude unless instructions are contained in the specified SID, or

(b) If the requested altitude is not expected to be available, inform the pilot what altitude can be expected and when/where to expect it.

NOTE–
1. *14 CFR Section 91.185, says that in the event of a two-way radio communication failure, in VFR conditions or if VFR conditions are encountered after the failure, the pilot must continue the flight under VFR and land as soon as practicable. That section also says that when the failure occurs in IFR conditions the pilot must continue flight at the highest of the following altitudes or flight levels for the route segment being flown:*

a. *The altitude or flight level assigned in the last ATC clearance received.*

b. *The minimum altitude (converted, if appropriate, to minimum flight level as prescribed in 14 CFR Section 91.121(c)) for IFR operations. (This altitude should be consistent with MEAs, MOCAs, etc.)*

c. *The altitude or flight level ATC has advised may be expected in a further clearance.*

2. *If the expected altitude is the highest of the preceding choices, the pilot should begin to climb to that expected altitude at the time or fix specified in the clearance. The choice to climb to the expected altitude is not applicable if the pilot has proceeded beyond the specified fix or if the time designated in the clearance has expired.*

PHRASEOLOGY–
CLIMB AND MAINTAIN (the altitude as near as possible to the pilot's requested altitude). EXPECT (the requested altitude or an altitude different from the requested altitude) AT (time or fix),

and if applicable,

(pilot's requested altitude) IS NOT AVAILABLE.

EXAMPLE–
1. *A pilot has requested flight level 350. Flight level 230 is immediately available and flight level 350 will be available at the Appleton zero five zero radial 35 mile fix. The clearance will read:*
"Climb and maintain flight level two three zero. Expect flight level three five zero at Appleton zero five zero radial three five mile fix."

2. *A pilot has requested 9,000 feet. An altitude restriction is required because of facility procedures or requirements. Assign the altitude and advise the pilot at what fix/time the pilot may expect the requested altitude. The clearance could read:*
"Climb and maintain five thousand. Expect niner thousand one zero minutes after departure."

3. *A pilot has requested 17,000 feet which is unavailable. You plan 15,000 feet to be the pilot's highest altitude prior to descent to the pilot's destination but only 13,000 feet is available until San Jose VOR. Advise the pilot of the expected altitude change and at what fix/time to expect clearance to 15,000 feet. The clearance will read: "Climb and maintain one three thousand. Expect one five thousand at San Jose. One seven thousand is not available."*

REFERENCE–
FAAO JO 7110.65, Para 4–3–3 Abbreviated Departure Clearance.
FAAO JO 7110.65, Para 5–8–2 Initial Heading.

4. Use one of the following when the SID contains published crossing restrictions:

(a) When the top altitude is included in the SID route description, instruct aircraft to "climb via SID."

(b) When a top altitude is not published on a SID that contains published crossing restrictions, or when it is necessary to issue an interim altitude instruct the aircraft to "Climb via SID except (altitude assignment/ change)".

EXAMPLE–
"Cleared to Johnston Airport, Scott One departure, Jonez transition, Q-One Forty-five. Climb via SID."

"Cleared to Johnston Airport, Scott One departure,

Jonez transition, Q-One Forty-five, Climb via SID except maintain flight level one eight zero."

"Cleared to Johnston Airport, Scott One departure, Jonez transition, Q-One Forty-five, Climb Via SID except maintain flight level one eight zero, expect flight level three five zero one zero minutes after departure."

NOTE–
Considering the principle that the last ATC clearance issued has precedence over the previous, the phraseology 'maintain (altitude)' alone cancels previously issued altitude restrictions, including SID/STAR altitude restrictions, unless they are restated or modified.

REFERENCE–
FAA JO7110.65 Para 4-2-5 Route or Altitude Amendments
AIM 4-4-10 Adherence to Clearance

4–3–3. ABBREVIATED DEPARTURE CLEARANCE

a. Issue an abbreviated departure clearance if its use reduces verbiage and the following conditions are met:

REFERENCE–
FAAO JO 7110.65, Para 4–2–§ IFR-VFR and VFR-IFR Flights.

1. The route of flight filed with ATC has not been changed by the pilot, company, operations officer, input operator, or in the stored flight plan program prior to departure.

NOTE–
A pilot will not accept an abbreviated clearance if the route of flight filed with ATC has been changed by him/her or the company or the operations officer before departure. He/she is expected to inform the control facility on initial radio contact if he/she cannot accept the clearance. It is the responsibility of the company or operations officer to inform the pilot when they make a change.

2. All ATC facilities concerned have sufficient route of flight information to exercise their control responsibilities.

NOTE–
The route of flight information to be provided may be covered in letters of agreement.

3. When the flight will depart IFR, destination airport information is relayed between the facilities concerned prior to departure.

EXAMPLE–
1. *A tower or flight service station relay of destination airport information to the center when requesting clearance:*
"Request clearance for United Four Sixty-One to O'Hare."

2. *A center relay to the tower or flight service station when initiating a clearance:*
"Clearance for United Four Sixty-One to O'Hare."

NOTE–
Pilots are expected to furnish the facility concerned with destination airport information on initial radio call-up. This will provide the information necessary for detecting any destination airport differences on facility relay.

4. The assigned altitude, according to the provisions in para 4–3–2, Departure Clearances, subparagraph e, is stated in the clearance. Where a top altitude is published in the SID route description it may be omitted.

b. If it is necessary to modify a filed route of flight in order to achieve computer acceptance due, for example, to incorrect fix or airway identification, the contraction "FRC," meaning "Full Route Clearance Necessary," or "FRC/(fix)," will be added to the remarks. "FRC" or "FRC/(fix)" must always be the first item of intra-center remarks. When "FRC" or "FRC/(fix)" appears on a flight progress strip, the controller issuing the ATC clearance to the aircraft must issue a full route clearance to the specified fix, or, if no fix is specified, for the entire route.

EXAMPLE–
"Cleared to Missoula International Airport, Chief Two Departure to Angley; direct Salina; then as filed; maintain one seven thousand."

NOTE–
Changes, such as those made to conform with traffic flows and preferred routings, are only permitted to be made by the pilot (or his/her operations office) or the controller responsible for initiating the clearance to the aircraft.

c. Specify the destination airport in the clearance.

d. When no changes are required in the filed route, state the phrase: "Cleared to (destination) airport, ([SID name and number] and SID transition, as appropriate); then, as filed." If a SID is not assigned, follow with "As filed."

1. Specify the assigned altitude. The altitude may be omitted and pilots instructed to "climb via SID" when a top altitude is published in the SID route description.

2. When the SID has published altitude restrictions but the top altitude is not published or must be changed, state the phrase "climb via SID

except maintain" to assign the top altitude. If required, add any additional instructions or information, including final requested altitude if different than assigned except if Pre–Departure Clearance (PDC) is utilized.

PHRASEOLOGY–
CLEARED TO (destination) AIRPORT;

and as appropriate,

(SID name and number) DEPARTURE,
THEN AS FILED.

MAINTAIN (altitude); (additional instructions or information).

Or as appropriate,

CLIMB VIA SID.

CLIMB VIA SID except maintain (altitude); (additional instructions or information).

If a SID is not assigned,

CLEARED TO (destination) AIRPORT AS FILED.
MAINTAIN (altitude);

and if required,

(additional instructions or information).

EXAMPLE–
"Cleared to Reynolds Airport; David Two Departure, Kingham Transition; then, as filed. Maintain niner thousand. Expect flight level four one zero, one zero minutes after departure."

"Cleared to Reynolds Airport; David Two Departure, Kingham Transition; then, as filed. Climb via SID."

"Cleared to Reynolds Airport; David Two Departure, Kingham Transition; then, as filed. Climb via SID except maintain flight level two four zero. Expect flight level four one zero, one zero minutes after departure.

"Cleared to Reynolds Airport as filed. Maintain niner thousand. Expect flight level four one zero, one zero minutes after departure."

NOTE–
1. *SIDs are excluded from "cleared as filed" procedures.*

2. *If a pilot does not wish to accept an ATC clearance to fly a SID, he/she is expected to advise ATC or state "NO SID" in his/her flight plan remarks.*

REFERENCE–
PCG, Climb Via, Top Altitude

e. When a filed route will require revisions, the controller responsible for initiating the clearance to the aircraft must either:

1. Issue a FRC/FRC until a fix; or

2. If it reduces verbiage, state the phrase: "Cleared to (destination) airport, or cleared NAVAID, intersection, or waypoint (type if known), (SID name and number and SID transition, as appropriate), then as filed, except ..." Specify the necessary revision.

3. Specify the assigned altitude. The altitude may be omitted and pilots instructed to "climb via SID" when a top altitude is published in the SID route description.

4. When the SID has published altitude restrictions but the top altitude is not published or must be changed state the phrase "climb via SID except maintain" and the assign the top altitude. If required, add any additional instructions or information.

5. If a SID is not assigned, state: "Cleared to (destination) airport or cleared to NAVAID, intersection, or waypoint (type if known) as filed, except ..." Specify the necessary revision, the assigned altitude; and if required, add any additional instructions or information.

PHRASEOLOGY–
CLEARED TO (destination) AIRPORT.

Or

CLEARED TO (NAVAID name and type).

Or

CLEARED TO (intersection or waypoint name and type).

and as appropriate,

(SID name and number) DEPARTURE,

(transition name) TRANSITION; THEN,

AS FILED, EXCEPT CHANGE ROUTE TO READ

(amended route portion).

MAINTAIN (altitude);

Or as appropriate,

CLIMB VIA SID

CLIMB VIA SID except maintain (altitude); (additional instructions or information);

and if required,

(additional instructions or information).

If a SID is not assigned,

CLEARED TO (destination) AIRPORT AS FILED,

EXCEPT CHANGE ROUTE TO READ (amended route portion).

MAINTAIN (altitude);

and if required,

(additional instructions or information).

EXAMPLE–
"Cleared to Reynolds Airport; South Boston One Departure; then, as filed, except change route to read South Boston Victor Twenty Greensboro. Maintain eight thousand, report leaving four thousand."

"Cleared to Reynolds Airport; South Boston One Departure; then, as filed, except change route to read South Boston Victor Twenty Greensboro; climb via SID."

"Cleared to Reynolds Airport; South Boston One Departure; then, as filed, except change route to read South Boston Victor Twenty Greensboro; climb via SID except maintain flight level one eight zero, expect flight level three one zero one zero minutes after departure."

"Cleared to Reynolds Airport as filed, except change route to read South Boston Victor Twenty Greensboro. Maintain eight thousand, report leaving four thousand."

"Cleared to Reynolds Airport via Victor Ninety-one Albany, then as filed. Maintain six thousand."

f. In a nonradar environment specify one, two, or more fixes, as necessary, to identify the initial route of flight.

1. Specify the destination airport, when practicable, followed by the word "airport" even though it is outside controlled airspace.

PHRASEOLOGY–
CLEARED TO (destination) AIRPORT

2. When the clearance limit is a NAVAID, the type of NAVAID must follow the NAVAID name.

PHRASEOLOGY–
CLEARED TO (NAVAID name and type)

3. When the clearance limit is an intersection or waypoint and the type is known, the type must follow the intersection or waypoint name.

PHRASEOLOGY–
CLEARED TO (intersection or waypoint name and type)

EXAMPLE–
The filed route of flight is from Hutchins V10 Emporia, thence V10N and V77 to St. Joseph. The clearance will read:
"Cleared to Watson Airport as filed via Emporia, maintain Seven Thousand."

g. Do not apply these procedures when a pilot requests a detailed clearance or to military operations conducted within ALTRV, stereo routes, operations above FL 600, and other military operations requiring special handling.

NOTE–
Departure clearance procedures and phraseology for military operations within approved altitude reservations, military operations above FL 600, and other military operations requiring special handling are contained in separate procedures in this order or in a LOA, as appropriate.

REFERENCE–
FAAO JO 7110.65, Para 4–2–7 ALTRV Clearance.
FAAO JO 7110.65, Para 9–2–14 Military Operations Above FL 600.

4–3–4. DEPARTURE RESTRICTIONS, CLEARANCE VOID TIMES, HOLD FOR RELEASE, AND RELEASE TIMES

Assign departure restrictions, clearance void times, hold for release, or release times when necessary to separate departures from other traffic or to restrict or regulate the departure flow.

REFERENCE–
FAAO JO 7110.65, Para 10–3–1 Overdue Aircraft.
FAAO JO 7110.65, Para 10–4–1 Traffic Restrictions.
FAAO JO 7110.65, Para 10–4–3 Traffic Resumption.

a. Clearance Void Times.

1. When issuing clearance void times at airports not served by control towers, provide alternative

instructions requiring the pilots to advise ATC of their intentions no later than 30 minutes after the clearance void time if not airborne.

2. The facility delivering a clearance void time to a pilot must issue a time check.

PHRASEOLOGY–
CLEARANCE VOID IF NOT OFF BY (clearance void time),

and if required,

IF NOT OFF BY (clearance void time), ADVISE (facility) NOT LATER THAN (time) OF INTENTIONS.

TIME (time in hours, minutes, and the nearest quarter minute).

b. Hold For Release (HFR).

1. "Hold for release" instructions must be used when necessary to inform a pilot or a controller that a departure clearance is not valid until additional instructions are received.

REFERENCE–
P/CG Term– Hold for Release.

2. When issuing hold for release instructions, include departure delay information.

PHRASEOLOGY–
(Aircraft identification) CLEARED TO (destination) AIRPORT AS FILED, MAINTAIN (altitude),

and if required,

(additional instructions or information).

HOLD FOR RELEASE, EXPECT (time in hours and/or minutes) DEPARTURE DELAY.

3. When conditions allow, release the aircraft as soon as possible.

PHRASEOLOGY–
To another controller,

(aircraft identification) RELEASED.

To a flight service specialist,

ADVISE (aircraft identification) RELEASED FOR DEPARTURE.

To a pilot at an airport not served by a control tower,

(aircraft identification) RELEASED FOR DEPARTURE.

c. Release Times.

1. Release times must be issued to pilots when necessary to specify the earliest time an aircraft may depart.

NOTE–
A release time is a departure restriction issued to a pilot (either directly or through authorized relay) to separate a departing aircraft from other traffic.

2. The facility issuing a release time to a pilot must include a time check.

PHRASEOLOGY–
(Aircraft identification) RELEASED FOR DEPARTURE AT (time in hours and/or minutes),

and if required,

IF NOT OFF BY (time), ADVISE (facility) NOT LATER THAN (time) OF INTENTIONS.

TIME (time in hours, minutes, and nearest quarter minute).

d. When expect departure clearance times (EDCT) are assigned through traffic management programs, excluding overriding call for release (CFR) operations as described in subparagraph e, the departure terminal must, to the extent possible, plan ground movement of aircraft destined to the affected airport(s) so that flights are sequenced to depart no earlier than 5 minutes before, and no later than 5 minutes after the EDCT. Do not release aircraft on their assigned EDCT if a ground stop (GS) applicable to that aircraft is in effect, unless approval has been received from the originator of the GS.

e. Call for Release (CFR). When CFR is in effect, release aircraft so they are airborne within a window that extends from 2 minutes prior and ends 1 minute after the assigned time, unless otherwise coordinated.

NOTE–
1. *Subparagraph (e) applies to all facilities.*
2. *Coordination may be verbal, electronic, or written.*

1. If an aircraft has begun to taxi or requests taxi in a manner consistent with meeting the EDCT, the aircraft must be released. Additional coordination is not required.

2. If an aircraft requests taxi or clearance for departure inconsistent with meeting the EDCT window, ask the pilot to verify the EDCT.

(a) If the pilot's EDCT is the same as the FAA EDCT, the aircraft is released consistent with the EDCT.

(b) If the pilot's EDCT is not the same as the FAA EDCT, refer to Trust and Verify Note below.

3. If an aircraft requests taxi too late to meet the EDCT, contact the ATCSCC through the appropriate TMU.

NOTE–
(Trust & Verify) EDCTs are revised by Air Carriers and Traffic Management for changing conditions en route or at affected airport(s). Terminal controllers' use of aircraft reported EDCT for departure sequencing should be verified with the appropriate TMU prior to departure if this can be accomplished without the aircraft incurring delay beyond the EDCT reported by the aircraft. The preferred method for verification is the Flight Schedule Monitor (FSM). If the EDCT cannot be verified without incurring additional delay, the aircraft should be released based on the pilot reported EDCT. The aircraft operator is responsible for operating in a manner consistent to meet the EDCT.

4–3–5. GROUND STOP

Do not release an aircraft if a ground stop (GS) applicable to that aircraft is in effect, without the approval of the originator of the GS.

4–3–6. DELAY SEQUENCING

When aircraft elect to take delay on the ground before departure, issue departure clearances to them in the order in which the requests for clearance were originally made if practicable.

4–3–7. FORWARD DEPARTURE DELAY INFORMATION

Inform approach control facilities and/or towers of anticipated departure delays.

4–3–8. COORDINATION WITH RECEIVING FACILITY

a. Coordinate with the receiving facility before the departure of an aircraft if the departure point is less than 15 minutes flying time from the transferring facility's boundary unless an automatic transfer of data between automated systems will occur, in which case, the flying time requirement may be reduced to 5 minutes or replaced with a mileage from the boundary parameter when mutually agreeable to both facilities.

NOTE–
Agreements requiring additional time are encouraged between facilities that need earlier coordination. However, when agreements establish mandatory radar handoff procedures, coordination needs only be effected in a timely manner prior to transfer of control.

REFERENCE–
FAAO JO 7110.65, Chapter 5, Section 4, Transfer of Radar Identification, Para 5–4–1 Application.

b. The actual departure time or a subsequent strip posting time must be forwarded to the receiving facility unless assumed departure times are agreed upon and that time is within 3 minutes of the actual departure time.

4–3–9. VFR RELEASE OF IFR DEPARTURE

When an aircraft which has filed an IFR flight plan requests a VFR departure through a terminal facility, FSS, or air/ground communications station:

a. After obtaining, if necessary, approval from the facility/sector responsible for issuing the IFR clearance, you may authorize an IFR flight planned aircraft to depart VFR. Inform the pilot of the proper frequency and, if appropriate, where or when to contact the facility responsible for issuing the clearance.

PHRASEOLOGY–
VFR DEPARTURE AUTHORIZED. CONTACT (facility) ON (frequency) AT (location or time if required) FOR CLEARANCE.

b. If the facility/sector responsible for issuing the clearance is unable to issue a clearance, inform the pilot, and suggest that the delay be taken on the ground. If the pilot insists upon taking off VFR and obtaining an IFR clearance in the air, inform the facility/sector holding the flight plan of the pilot's intentions and, if possible, the VFR departure time.

4–3–10. FORWARDING DEPARTURE TIMES

TERMINAL

Unless alternate procedures are prescribed in a letter of agreement or automatic departure messages are being transmitted between automated facilities, forward departure times to the facility from which you received the clearance and also to the terminal departure controller when that position is involved in the departure sequence.

Chapter 5. Radar

Section 1. General

5–1–1. PRESENTATION AND EQUIPMENT PERFORMANCE

Provide radar service only if you are personally satisfied that the radar presentation and equipment performance is adequate for the service being provided.

NOTE–
The provision of radar service is not limited to the distance and altitude parameters obtained during the commissioning flight check.

5–1–2. ALIGNMENT ACCURACY CHECK

During relief briefing, or as soon as possible after assuming responsibility for a control position, check the operating equipment for alignment accuracy and display acceptability. Recheck periodically throughout the watch.

REFERENCE–
FAAO JO 7210.3, Chapter 3, Chapter 8, Chapter 9, Chapter 10, and Chapter 11.
Comparable Military Directives.

TERMINAL

a. Check the alignment of the radar video display by assuring that the video/digital map or overlay is properly aligned with a permanent target of known range and azimuth on the radar display. Where possible, check one permanent target per quadrant.

b. Accuracy of the radar video display must be verified for digitized radar systems by using the moving target indicator (MTI) reflectors, fixed location beacon transponders (Parrots), beacon real–time quality control (RTQC) symbols or calibration performance monitor equipment (CPME) beacon targets.

REFERENCE–
FAAO JO 7210.3, Para 3–8–1, Tolerance for Radar Fix Accuracy.

c. In Digital Terminal Automation Systems (DTAS) conducts continuous self–monitoring of alignment accuracy; therefore, controller alignment checks are not required.

EN ROUTE

d. Radar Data Processing (RDP) alignment checking is accomplished by the operational program as part of the certification procedures for system startup and then on a real–time basis during operational hours.

e. Ensure the situation display center and altitude limits for the system are appropriate for the operating position.

REFERENCE–
FAAO JO 7110.65, Para 5–14–5, Selected Altitude Limits.

5–1–3. ATC SURVEILLANCE SOURCE USE

Use approved ATC Surveillance Sources.

REFERENCE–
FAAO JO 7110.65, Para 5–1–4, Beacon Range Accuracy.
FAAO JO 7110.65, Para 5–2–15, Inoperative or Malfunctioning Interrogator.

a. Secondary radar may be used as the sole display source as follows:

1. In Class A airspace.

REFERENCE–
FAAO JO 7110.65, Para 5–2–16, Failed Transponder in Class A Airspace.
14 CFR Section 91.135, Operations in Class A Airspace.

2. Outside Class A airspace, or where mix of Class A airspace/non–Class A airspace exists, only when:

(a) Additional coverage is provided by secondary radar beyond that of the primary radar, or

(b) The primary radar is temporarily unusable or out of service. Advise pilots when these conditions exist, or

PHRASEOLOGY–
PRIMARY RADAR UNAVAILABLE (describe location). RADAR SERVICES AVAILABLE ON TRANSPONDER EQUIPPED AIRCRAFT ONLY.

NOTE–
1. *Advisory may be omitted when provided on ATIS and pilot indicates having ATIS information.*

2. *This provision is to authorize secondary radar only operations where there is no primary radar available and the condition is temporary.*

(c) A secondary radar system is the only source of radar data for the area of service. When the system is used for separation, beacon range accuracy is assured, as provided in para 5–1–4, Beacon Range Accuracy. *TERMINAL.* Advise pilots when these conditions exist.

NOTE–
Advisory may be omitted when provided on ATIS or by other appropriate notice to pilots.

b. *TERMINAL.* Do not use secondary radar only to conduct surveillance (ASR) final approaches unless an emergency exists and the pilot concurs.

c. All procedures and requirements relating to ATC services using secondary radar targets apply to ATC services provided to targets derived from ADS-B and WAM.

NOTE–
Targets derived from ADS-B and/or WAM cannot be used to provide 3NM separation in the EAS. 3NM targets are not derived from ADS-B and/or WAM within the EAS.

REFERENCE–
JO 7110.65, Para4-1-2, Exceptions.
JO 7110.65, Para 4-4-2, Route Structure Transitions
JO 7110.65, Para 5-5-1, Application
JO 7110.65, Para 6-5-4, Minima Along Other Than Established Airways or Routes
JO 7110.65, Chapter 6, Nonradar
JO 7110.65, Para 5-5-4, Minima
JO 7210.3 3-6-2 ATC Surveillance Source Use

5–1–4. BEACON RANGE ACCURACY

a. You may use beacon targets for separation purposes if beacon range accuracy is verified by one of the following methods:

NOTE–
1. *The check for verification of beacon range accuracy accomplished by correlation of beacon and primary radar targets of the same aircraft is not a check of display accuracy. Therefore, it is not necessary that it be done using the same display with which separation is being provided, nor the same targets being separated.*

2. *Narrowband and Full Digital Automation Systems: Technical operations personnel verify beacon range accuracy for automated narrowband display equipment and Full Digital Terminal Automation Systems. Consequently, further verification by the controller is unnecessary.*

1. Correlate beacon and primary targets of the same aircraft (not necessarily the one being provided separation) to assure that they coincide.

2. When beacon and primary targets of the same aircraft do not coincide, correlate them to assure that any beacon displacement agrees with the specified distance and direction for that particular radar system.

3. Refer to beacon range monitoring equipment where so installed.

b. If beacon range accuracy cannot be verified, you may use beacon targets only for traffic information.

REFERENCE–
FAAO JO 7110.65, Para 5–1–3, Radar Use.

5–1–5. ELECTRONIC ATTACK (EA) ACTIVITY

a. Refer all EA activity requests to the appropriate center supervisor.

REFERENCE–
FAAO JO 7610.4, Chapter 2, Section 7, Electronic Attack (EA) and Testing Coordination.

NOTE–
EA activity can subsequently result in a request to apply EA videos to the radar system which may necessitate the decertification of the narrowband search radar. The Systems Engineer should be consulted concerning the effect of EA on the operational use of the narrowband radar prior to approving/disapproving requests to conduct EA activity.

b. When EA activity interferes with the operational use of radar:

1. *EN ROUTE.* Request the responsible military unit or aircraft, if initial request was received directly from pilot, to suspend the activity.

2. *TERMINAL.* Request suspension of the activity through the ARTCC. If immediate cessation of the activity is required, broadcast the request directly to the EA aircraft on the emergency frequency. Notify the ARTCC of direct broadcast as soon as possible.

c. When previously suspended activity will no longer interfere:

1. *EN ROUTE.* Inform the NORAD unit or aircraft that it may be resumed.

2. *TERMINAL.* Inform the ARTCC or aircraft that it may be resumed. Obtain approval from the ARTCC prior to broadcasting a resume clearance directly to the aircraft.

controller's area of jurisdiction unless otherwise specified by a LOA or a facility directive.

3. Restrictions issued to ensure separation are passed to the receiving controller.

d. After transferring communications, continue to comply with the requirements of subparas c1 and 2.

e. Comply with restrictions issued by the receiving controller unless otherwise coordinated.

f. Comply with the provisions of para 2–1–17, Radio Communications Transfer, subparas a and b. To the extent possible, transfer communications when the transfer of radar identification has been accepted.

NOTE–
Before the ARTS/STARS "modify/quick look" function is used to transfer radar identification, a facility directive which specifies communication transfer points is required.

g. Advise the receiving controller of pertinent information not contained in the data block or flight progress strip unless covered in a LOA or facility directive. Pertinent information includes:

1. Assigned heading.

2. Air speed restrictions.

3. Altitude information issued.

4. Observed track or deviation from the last route clearance.

5. The beacon code if different from that normally used or previously coordinated.

6. Any other pertinent information.

h. Ensure that the data block is associated with the appropriate target.

i. Initiate verbal coordination to verify the position of primary or nondiscrete targets when using the automated handoff functions except for intrafacility handoffs using single-sensor systems or multisensor systems operating in a mosaic RDP mode.

j. Initiate verbal coordination before transferring control of a track when "CST," "FAIL," "NONE," "NB," "NX," "IF," "NT", or "TRK" is displayed in the data block.

k. Advise the receiving controller if radar monitoring is required.

l. Issue restrictions to the receiving controller which are necessary to maintain separation from other aircraft within your area of jurisdiction before releasing control of the aircraft.

m. Consider the target being transferred as identified on the receiving controller's display when the receiving controller acknowledges receipt verbally or has accepted an automated handoff.

n. Accomplish the necessary coordination with any intervening controllers whose area of jurisdiction is affected by the receiving controller's delay in the climb or the descent of an aircraft through the vertical limits of your area of jurisdiction when the receiving controller advises you of that delay before accepting the transfer of radar identification unless otherwise specified by a LOA or a facility directive.

5–4–6. RECEIVING CONTROLLER HANDOFF

The receiving controller must:

a. Ensure that the target position corresponds with the position given by the transferring controller or that there is an appropriate association between an automated data block and the target being transferred before accepting a handoff.

REFERENCE–
FAAO JO 7110.65, Para 2–1–14, Coordinate Use of Airspace.
FAAO JO 7110.65, Para 2–1–15, Control Transfer.
FAAO JO 7110.65, Para 5–4–5, Transferring Controller Handoff.

b. Issue restrictions that are needed for the aircraft to enter your sector safely before accepting the handoff.

c. Comply with restrictions issued by the transferring controller unless otherwise coordinated.

d. After accepting a handoff from another controller, confirm the identity of primary target by advising the aircraft of its position, and of a beacon target by observing a code change, an "ident" reply, or a "standby" squawk unless one of these was used during handoff. These provisions do not apply at those towers and GCAs which have been delegated the responsibility for providing radar separation within designated areas by the parent approach control facility and the aircraft identification is assured by sequencing or positioning prior to the handoff.

REFERENCE–
FAAO JO 7110.65, Para 5–9–5, Approach Separation Responsibility.

e. When using appropriate equipment, consider a discrete beacon target's identity to be confirmed when:

1. The data block associated with the target being handed off indicates the computer assigned discrete beacon code is being received, or

2. You observe the deletion of a discrete code that was displayed in the data block, or

NOTE–
When the aircraft generated discrete beacon code does not match the computer assigned beacon code, the code generated will be displayed in the data block. When the aircraft changes to the assigned discrete code, the code disappears from the data block. In this instance, the observance of code removal from the data block satisfies confirmation requirements.

3. You observe the numeric display of a discrete code that an aircraft has been instructed to squawk or reports squawking.

f. Take the identified action prior to accepting control of a track when the following indicators are displayed in the data block:

1. "AMB" and "AM": advise the other facility that a disparity exists between the position declared by their computer and that declared by your CARTS/PIDP/STARS system.

2. "NAT", "NT," or "TU": advise the other facility if a disparity exists between the position declared by their computer and the actual target position.

3. "DATA", "CST", "NONE", "NX", "OLD", or "OL": initiate verbal coordination.

g. ERAM: Notify the FLM when a MISM is displayed in the data block.

h. Advise the transferring controller, prior to accepting the transfer of radar identification, that you will delay the climb or the descent of an aircraft through the vertical limits of the transferring controller's area of jurisdiction, unless otherwise specified in a LOA or a facility directive.

i. If you decide, *after* accepting the transfer of radar identification, to delay the aircraft's climb or descent through the vertical limits of the transferring controller's area of jurisdiction, advise the transferring controller of that decision as soon as possible.

5–4–7. POINT OUT

a. The transferring controller must:

1. Obtain verbal approval before permitting an aircraft to enter the receiving controller's delegated airspace. *TERMINAL.* Automated approval may be utilized in lieu of verbal, provided the appropriate automation software is operational (automated point out function), and the procedures are specified in a facility directive/LOA.

2. Obtain the receiving controller's approval before making any changes to an aircraft's flight path, altitude, speed, or data block information after the point out has been approved.

3. Comply with restrictions issued by the receiving controller unless otherwise coordinated.

4. Be responsible for subsequent radar handoffs and communications transfer, including flight data revisions and coordination, unless otherwise agreed to by the receiving controller or as specified in a LOA.

b. The receiving controller must:

1. Ensure that the target position corresponds with the position given by the transferring controller or that there is an association between a computer data block and the target being transferred prior to approving a point out.

2. Be responsible for separation between point out aircraft and other aircraft for which he/she has separation responsibility.

3. Issue restrictions necessary to provide separation from other aircraft within his/her area of jurisdiction.

5–4–8. AUTOMATED INFORMATION TRANSFER (AIT)

Transfer radar identification, altitude control, and/or en route fourth line control information, without verbal coordination under the following conditions:

a. During radar handoff; and

b. Via information displayed in full data blocks; and

c. Within the same facility, except as provided in Paragraph 5–4–9, Interfacility Automated Information Transfer; and

d. When following procedures specified in your facility AIT directive.

REFERENCE–
FAAO JO 7110.65, Para 5–4–11, En Route Fourth Line Data Block Usage.

5–4–9. INTERFACILITY AUTOMATED INFORMATION TRANSFER

EN ROUTE

Transfer radar identification without verbal coordination under the following conditions:

a. During radar handoff; and

b. Via information displayed in full data blocks; and

c. On aircraft at assigned altitude in level flight; and

d. Only the first sector within the receiving facility must utilize the procedure; and

e. When following procedures specified in your facility AIT directive and LOA.

5–4–10. PREARRANGED COORDINATION

Prearranged coordination allowing aircraft under your control to enter another controller's area of jurisdiction may only be approved provided procedures are established and published in a facility directive/LOA in accordance with FAAO JO 7210.3, Paragraph 3–6–7, Prearranged Coordination.

NOTE–
Under no circumstances may one controller permit an aircraft to enter another's airspace without proper coordination. Coordination can be accomplished by several means; i.e., radar handoff, automated information transfer, verbal, point–out, and by prearranged coordination procedures identified in a facility directive that clearly describe the correct application. Airspace boundaries should not be permitted to become barriers to the efficient movement of traffic. In addition, complete coordination, awareness of traffic flow, and understanding of each position's responsibility concerning penetration of another's airspace cannot be overemphasized.

REFERENCE–
FAAO JO 7110.65, Para 2–1–14, Coordinate Use of Airspace.
FAAO JO 7110.65, Para 5–4–3, Methods.
FAAO JO 7110.65, Para 5–4–8, Automated Information Transfer (AIT).
FAAO JO 7210.3, Para 3–6–7, Prearranged Coordination.

5–4–11. EN ROUTE FOURTH LINE DATA BLOCK USAGE

a. The fourth line of the data block must be displayed. When used for forwarding control information, only the specified messages listed in this section may be used. Any additional control information must be forwarded via other communications methods. Free text may be used by individual sector teams for recording information the team deems appropriate for managing the sector, but must be removed prior to initiation of identification transfer.

REFERENCE–
FAAO JO 7110.65, Para 5–4–5, Transferring Controller Handoff, subpara b.
FAAO JO 7110.65, Para 5–4–8, Automated Information Transfer (AIT).
FAAO JO 7110.65, Para 5–4–9, Interfacility Automated Information Transfer.

b. The en route fourth line data block area must be used for coordination purposes only in association with radar identified aircraft.

c. When automated information transfer (AIT) procedures are applied, en route fourth line usage for transfer of control information must be specifically defined within facility AIT directive.

REFERENCE–
FAAO JO 7110.65, Para 5–4–8, Automated Information Transfer (AIT).
FAAO JO 7210.3, Para 4–3–8, Automated Information Transfer (AIT).

d. Coordination format for assigned headings must use the designation character "H" preceding a three–digit number.

EXAMPLE–
H080, H270

e. Aircraft assigned a heading until receiving a fix or joining a published route must be designated with assigned heading format followed by the fix or route.

EXAMPLE–
H080/ALB, 080/J121, PH/ALB

NOTE–
1. *The notation "PH" may be used to denote present heading.*

2. *The character "H" may be omitted as a prefix to the heading assignment only if necessary due to character field limitations, and it does not impede understanding.*

f. Coordination format for weather deviations must use the designated characters:
D-deviation
L-left
R-right

N-north
E-east
S-south
W-west
/F – direct next NAVAID/waypoint
D+2 headings – deviate between.

NOTE–
1. *Two digits specify turns in degrees and must include direction character(s). Three digits specify heading(s).*

2. *The inclusion of a /NAVAID, /waypoint, or /F indicates that the pilot has been authorized to deviate for weather and must rejoin the route at the next NAVAID, waypoint, or fix in the route of flight in accordance with the phraseology in paragraph 2-6-4.*

EXAMPLE–
D90/ATL, DL/KD75U, D090/F

3. *The absence of a NAVAID, waypoint, or /F indicates that the pilot has been authorized to deviate for weather only, and the receiving controller must provide a clearance to rejoin the route in accordance with paragraph 2-1-15c.*

EXAMPLE–
DN, D20L, D30R, D080+120

g. Coordination format for assigned airspeeds must use the designation character "S" preceding a three–digit number.

NOTE–
A "+" notation may be added to denote an assigned speed at or greater than the displayed value. A "–" notation may be added to denote an assigned speed at or less than the displayed value.

EXAMPLE–
S210, S250, S250+, S280–

h. Aircraft assigned a Mach number must use the designation "M" preceding the two–digit assigned value.

EXAMPLE–
M80, M80+, M80–

REFERENCE–
*FAAO JO 7110.65, Para 5–4–**1**, En Route Fourth Line Data Block Usage, subpara gNOTE.*

i. Aircraft authorized to conduct celestial navigation training within 30 NM of the route centerline specified within the en route clearance.

EXAMPLE–
CELNAV

j. Coordination format for aircraft requesting an altitude change must use the designation characters "RQ" preceding a three–digit number.

EXAMPLE–
RQ170, RQ410

k. Coordination format for aircraft requesting a route change must use the designation "RQ/" preceding a specific fix identifier.

EXAMPLE–
RQ/LAX, RQ/NEUTO

l. The acceptance of a handoff by the receiving controller must constitute receipt of the information contained within the en route fourth line data block. This information must not be modified outside of the controller's area of jurisdiction unless verbally coordinated or specified in a Letter of Agreement or Facility Directive. It is the responsibility of the receiving controller to advise the transferring controller if any information is not understood, or needs to be revised.

NOTE–
Due to system and character limitations the usage of these standardized entries may require additional support via facility directive in order to provide complete coordination.

m. All other control information must be coordinated via other methods.

B

BACK-TAXI– A term used by air traffic controllers to taxi an aircraft on the runway opposite to the traffic flow. The aircraft may be instructed to back-taxi to the beginning of the runway or at some point before reaching the runway end for the purpose of departure or to exit the runway.

BASE LEG–
(See TRAFFIC PATTERN.)

BEACON–
(See AERONAUTICAL BEACON.)
(See AIRPORT ROTATING BEACON.)
(See AIRWAY BEACON.)
(See MARKER BEACON.)
(See NONDIRECTIONAL BEACON.)
(See RADAR.)

BEARING– The horizontal direction to or from any point, usually measured clockwise from true north, magnetic north, or some other reference point through 360 degrees.
(See NONDIRECTIONAL BEACON.)

BELOW MINIMUMS– Weather conditions below the minimums prescribed by regulation for the particular action involved; e.g., landing minimums, takeoff minimums.

BLAST FENCE– A barrier that is used to divert or dissipate jet or propeller blast.

BLAST PAD– A surface adjacent to the ends of a runway provided to reduce the erosive effect of jet blast and propeller wash.

BLIND SPEED– The rate of departure or closing of a target relative to the radar antenna at which cancellation of the primary radar target by moving target indicator (MTI) circuits in the radar equipment causes a reduction or complete loss of signal.
(See ICAO term BLIND VELOCITY.)

BLIND SPOT– An area from which radio transmissions and/or radar echoes cannot be received. The term is also used to describe portions of the airport not visible from the control tower.

BLIND TRANSMISSION–
(See TRANSMITTING IN THE BLIND.)

BLIND VELOCITY [ICAO]– The radial velocity of a moving target such that the target is not seen on primary radars fitted with certain forms of fixed echo suppression.

BLIND ZONE–
(See BLIND SPOT.)

BLOCKED– Phraseology used to indicate that a radio transmission has been distorted or interrupted due to multiple simultaneous radio transmissions.

BOTTOM ALTITUDE– In reference to published altitude restrictions on a STAR or STAR runway transition, the lowest altitude authorized.

BOUNDARY LIGHTS–
(See AIRPORT LIGHTING.)

BRAKING ACTION (GOOD, MEDIUM, POOR, OR NIL)– A report of conditions on the airport movement area providing a pilot with a degree/quality of braking that he/she might expect. Braking action is reported in terms of good, fair, poor, or nil. Effective October 1, 2016, Braking Action will be categorized in the following terms: Good, Good to Medium, Medium, Medium to Poor, Poor, and Nil.
(See RUNWAY CONDITION READING.)

BRAKING ACTION ADVISORIES– When tower controllers have received runway braking action reports which include the terms “fair,” “poor,” or “nil,” or whenever weather conditions are conducive to deteriorating or rapidly changing runway braking conditions, the tower will include on the ATIS broadcast the statement, “Braking action advisories are in effect” on the ATIS broadcast. During the time braking action advisories are in effect, ATC will issue the latest braking action report for the runway in use to each arriving and departing aircraft. Pilots should be prepared for deteriorating braking conditions and should request current runway condition information if not volunteered by controllers. Pilots should also be prepared to provide a descriptive runway condition report to controllers after landing. Effective October 1, 2016, the term “fair” will be replaced with “medium”.

BREAKOUT– A technique to direct aircraft out of the approach stream. In the context of simultaneous (independent) parallel operations, a breakout is used

to direct threatened aircraft away from a deviating aircraft.

BROADCAST– Transmission of information for which an acknowledgement is not expected.

(See ICAO term BROADCAST.)

BROADCAST [ICAO]– A transmission of information relating to air navigation that is not addressed to a specific station or stations.

BRIEFING GUIDE

U.S. DEPARTMENT OF TRANSPORTATION
FEDERAL AVIATION ADMINISTRATION

Initiated By: AJV–0
Vice President, Mission Support Services

Table of Contents

Paragraph Number	Title	Page
1-1-9	REQUESTS FOR INTERPRETATIONS OR CLARIFICATIONS	BG-4
1-2-6	ABBREVIATIONS	BG-5
2-3-6	AIRCRAFT TYPE	BG-14
2-3-10	CONTROL SYMBOLOGY	BG-5
2-4-17	NUMBERS USAGE	BG-5
2-5-2	NAVAID TERMS	BG-5
2-5-3	NAVAID TERMS	BG-5
2-6-2	HAZARDOUS INFLIGHT WEATHER ADVISORY SERVICE	BG-14
2-6-4	WEATHER AND CHAFF SERVICES	BG-16
2-9-3	CONTENT	BG-14
2-10-1	EN ROUTE SECTOR TEAM POSITION RESPONSIBILITIES	BG-17
2-10-2	TERMINAL RADAR/NONRADAR TEAM RESPONSIBILITIES	BG-17
2-10-3	TOWER TEAM RESPONSIBILITIES	BG-18
3-3-2	CLOSED/UNSAFE RUNWAY INFORMATION	BG-5
3-3-7	FAR FIELD MONITOR (FFM) REMOTE STATUS UNIT	BG-19
3-7-5	PRECISION APPROACH CRITICAL AREA	BG-5
3-8-1	SEQUENCE/SPACING APPLICATION	BG-20
3-9-6	SAME RUNWAY SEPARATION	BG-20
3-9-9	NONINTERSECTING CONVERGING RUNWAY OPERATIONS	BG-21
3-10-5	LANDING CLEARANCE	BG-24
4-1-1	ALTITUDE AND DISTANCE LIMITATIONS	BG-5
4-2-5	ROUTE OR ALTITUDE AMENDMENTS	BG-25
4-3-2	DEPARTURE CLEARANCES	BG-25
4-6-4	HOLDING INSTRUCTIONS	BG-5
4-7-5	MILITARY TURBOJET EN ROUTE DESCENT	BG-5
4-7-12	AIRPORT CONDITIONS	BG-26
4-7-13	SWITCHING ILS/MLS RUNWAYS	BG-5
4-8-1	APPROACH CLEARANCE	BG-26 & 29
4-8-9	MISSED APPROACH	BG-26
4-8-10	APPROACH INFORMATION	BG-26
5-1-3	RADAR USE	BG-31
5-1-13	RADAR SERVICE TERMINATION	BG-5
5-4-3	METHODS	BG-31
5-4-6	RECEIVING CONTROLLER HANDOFF	

5-6-2	METHODS	BG-32
5-9-2	FINAL APPROACH COURSE INTERCEPTION	BG-5
5-9-4	ARRIVAL INSTRUCTIONS	BG-5
5-9-5	APPROACH SEPARATION RESPONSIBILITY	BG-5
5-9-6	SIMULTANEOUS DEPENDENT APPROACHES	BG-5
5-9-9	SIMULTANEOUS OFFSET INSTRUMENT APPROACHES (SOIA) – HIGH UPDATE RADAR	BG-5
5-9-10	SIMULTANEOUS INDEPENDENT APPROACHES TO WIDELY-SPACED PARALLEL RUNWAYS WITHOUT FINAL MONITORS	BG-34
5-13-1	MONITOR ON PAR EQUIPMENT	BG-5
5-13-3	MONITOR INFORMATION	BG-5
7-2-1	VISUAL SEPARATION	BG-35
7-4-4	APPROACHES TO MULTIPLE RUNWAYS	BG-40
8-7-3	LONGITUDINAL SEPARATION	BG-41
8-8-3	LONGITUDINAL SEPARATION	BG-41
8-9-3	LONGITUDINAL SEPARATION	BG-41
8-10-3	LONGITUDINAL SEPARATION	BG-41
9-1-2	SPECIAL HANDLING	BG-44
10-2-13	MANPADS ALERT	BG-46
11-1-1	DUTY RESPONSIBILITY	BG-46
11-1-2	DUTIES AND RESPONSIBILITIES	BG-46
11-1-3	TIME BASED FLOW MANAGEMENT (TBFM)	BG-46
13-1-8	RECORDING OF CONTROL DATA	BG-5
13-1-9	ACKNOWLEDGEMENT OF AUTOMATED NOTIFICATION	BG-49
Appendix A	Aircraft Information Fixed-Wing Aircraft	BG-50
Appendix B	Aircraft Information Helicopters/Rotorcrafts	BG-50
Appendix C	Aircraft Information Specific Amateur−Built/Experimental Aircraft	BG-50

1. PARAGRAPH NUMBER AND TITLE: 1-1-9. REQUESTS FOR INTERPRETATIONS OR CLARIFICATIONS

2. BACKGROUND: Currently, there is no defined process for the submission of interpretation or clarification requests regarding the content of FAA Order JO 7110.65, Air Traffic Control. This proposed change formalizes the process as it now exists and delineates responsibilities for interpretation and clarification responses.

3. CHANGE:

OLD	NEW
Add	**1-1-9. REQUESTS FOR INTERPRETATIONS OR CLARIFICATIONS TO THIS ORDER**
Add	**a. Interpretation requests from field air traffic personnel must be submitted as follows:**
Add	**1. The request must be submitted, in writing, by an Air Traffic Facility/District manager to their Service Area Director.**
Add	**2. The Service Area Director must review the request and determine if more than one interpretation on the intent of the language can be inferred.**
Add	**3. If it is determined that an interpretation is required, the Service Area Director must submit the request, in writing, to the Air Traffic Procedures Directorate, for a response.**
Add	**b. If a request does not require an interpretation but further clarification is needed it must be forwarded to the Service Center Operations Support Group for a response.**
Add	**1. The Service Center Operations Support Group may consult with the Air Traffic Procedures Directorate when preparing their response.**
Add	**2. The Service Center Operations Support Group must provide a written response to the requestor and forward the response to the Air Traffic Procedures Directorate.**
Add	**c. Interpretation requests from all other sources must be submitted, in writing, to the Air Traffic Procedures Directorate through the Air Traffic Procedures correspondence mailbox.**
Add	***NOTE–*** ***Interpretations can be accessed through the Air Traffic Control Interpretation link at the following website:*** ***https://my.faa.gov/org/linebusiness/ato/mission_support/air_traffic_procedures.html.***
1-1-9 through **1-1-13**	Renumber **1-1-10** through **1-1-14**

1. PARAGRAPH NUMBER AND TITLE: 1-2-6. ABBREVIATIONS

2. BACKGROUND: FAA Order JO 7110.65W added a requirement to provide 10 NM separation in front and behind an aircraft when the data block indicates "NOWGT." The abbreviation description for "NOWGT" was inadvertently omitted from the new basic order.

3. CHANGE:

OLD	NEW
1-2-6. ABBREVIATIONS	**1-2-6. ABBREVIATIONS**
Add	**NOWGT. No weight. The weight class or wake category has not been determined**

---

1. PARAGRAPH NUMBER AND TITLE:
1-2-6. ABBREVIATIONS
2-3-10. CONTROL SYMBOLOGY
2-4-17. NUMBERS USAGE
2-5-2. NAVAID TERMS
2-5-3. NAVAID FIXES
3-3-2. CLOSED/UNSAFE RUNWAY INFORMATION
3-7-5. PRECISION APPROACH CRITICAL AREA
4-1-1. ALTITUDE AND DISTANCE LIMITATIONS
4-6-4. HOLDING INSTRUCTIONS
4-7-5. MILITARY TURBOJET EN ROUTE DESCENT
4-7-13. SWITCHING ILS/MLS RUNWAYS
5-1-13. RADAR SERVICE TERMINATION
5-9-2. FINAL APPROACH COURSE INTERCEPTION
5-9-4. ARRIVAL INSTRUCTIONS
5-9-5. APPROACH SEPARATION RESPONSIBILITY
5-9-6. SIMULTANEOUS DEPENDENT APPROACHES
5-9-9. SIMULTANEOUS OFFSET INSTRUMENT APPROACHES (SOIA) – HIGH UPDATE RADAR
5-13-1. MONITOR ON PAR EQUIPMENT
5-13-3. MONITOR INFORMATION
13-1-8. RECORDING OF CONTROL DATA

2. BACKGROUND: Microwave Landing System (MLS) is an all–weather, precision landing system originally intended to replace or supplement instrument landing systems (ILS). The FAA suspended the MLS program in 1994 in favor of the GPS (Wide Area Augmentation System WAAS). The FAA's inventory of instrument flight procedures no longer includes any MLS locations.

3. CHANGE:

OLD	NEW
1-2-6. ABBREVIATIONS	**1-2-6. ABBREVIATIONS**
TBL 1-2-1	***TBL 1-2-1***
FAA Order JO 7110.65 Abbreviations	FAA Order JO 7110.65 Abbreviations
Microwave Landing System (MLS)	Delete

OLD

2–3–10. CONTROL SYMBOLOGY

TBL 2-3-12

Miscellaneous Abbreviations

MLS approach

NEW

2–3–10. CONTROL SYMBOLOGY

TBL 2-3-12

Miscellaneous Abbreviations

Delete

OLD

2–4–17. NUMBERS USAGE

Title through **k2**

3. Issue MLS/TACAN frequencies by stating the assigned two– or three–digit channel number.

EXAMPLE–

"M–L–S channel Five Three Zero."

NEW

2–4–17. NUMBERS USAGE

No Change

3. Issue TACAN frequencies by stating the assigned two– or three–digit channel number.

Delete

OLD

2–5–2. NAVAID TERMS

Title through **b**

1. VOR/VORTAC/TACAN/MLS/GPS Way-point. State the name of the NAVAID or GPS Waypoint followed by the separate digits of the radial/azimuth/bearing (omitting the word "degrees") and the word "radial/azimuth/bearing."

EXAMPLE–

"Appleton Zero Five Zero Radial."

"Lindburg Runway Two Seven M–L–S, Two Six Zero Azimuth."

2. Arcs about VOR-DME/VORTAC/TACAN/MLS NAVAIDs. State the distance in miles from theNAVAID followed by the words "mile arc," the direction from the NAVAID in terms of the eight principal points of the compass, the word "of," and the name of the NAVAID.

EXAMPLE–

"Two Zero mile arc southwest of O–Hare Runway Two Seven Left M–L–S."

NEW

2–5–2. NAVAID TERMS

No Change

1. VOR/VORTAC/TACAN/GPS Waypoint. State the name of the NAVAID or GPS Waypoint followed by the separate digits of the radial/azimuth/bearing (omitting the word "degrees") and the word "radial/azimuth/bearing."

EXAMPLE–

"Appleton Zero Five Zero Radial."

2. Arcs about VOR-DME/VORTAC/TACAN NAVAIDs. State the distance in miles from the NAVAID followed by the words "mile arc," the direction from the NAVAID in terms of the eight principal points of the compass, the word "of," and the name of the NAVAID.

EXAMPLE–

*"Two Zero mile arc southwest of **Kirksville VOR"***

OLD

2–5–3. NAVAID FIXES

Describe fixes determined by reference to a radial/localizer/azimuth and distance from a VOR-DME/VORTAC/TACAN/ILS-DME or MLS as follows:

a

EXAMPLE–

"Appleton Zero Five Zero radial Three Seven mile fix." "Reno localizer back course Four mile fix."

"Hobby Runway One Two M–L–S Zero Niner Zero azimuth One Two mile fix."

NEW

2–5–3. NAVAID FIXES

Describe fixes determined by reference to a radial/localizer/azimuth and distance from a VOR-DME/VORTAC/TACAN/ILS-DME as follows:

No Change

EXAMPLE–

"Appleton Zero Five Zero radial Three Seven mile fix." "Reno localizer back course Four mile fix."

OLD

3–3–2. CLOSED/UNSAFE RUNWAY INFORMATION

Title through **b**

c. Except as permitted by para 4–8–7, Side-step Maneuver, where parallel runways are served by separate ILS/MLS systems and one of the runways is closed, the ILS/MLS associated with the closed runway should not be used for approaches unless not using the ILS/MLS would have an adverse impact on the operational efficiency of the airport.

NEW

3–3–2. CLOSED/UNSAFE RUNWAY INFORMATION

No Change

c. Except as permitted by para 4–8–7, Side-step Maneuver, where parallel runways are served by separate ILS systems and one of the runways is closed, the ILS associated with the closed runway should not be used for approaches unless not using the ILS would have an adverse impact on the operational efficiency of the airport.

OLD

3–7–5. PRECISION APPROACH CRITICAL AREA

Title through **c**

NOTE–
Signs and markings are installed by the airport operator to define the ILS/MLS critical area. No point along the longitudinal axis of the aircraft is permitted past the hold line for holding purposes. The operator is responsible to properly position the aircraft, vehicle, or equipment at the appropriate hold line/sign or designated point. The requirements in para 3–1–12, Visually Scanning Runways, remain valid as appropriate.

REFERENCE–
AC150/5340–1, Standards for Airport Markings

NEW

3–7–5. PRECISION APPROACH CRITICAL AREA

No Change

NOTE–
*Signs and markings are installed by the airport operator to define the ILS critical area. No point along the longitudinal axis of the aircraft is permitted past the hold line for holding purposes. The operator is responsible to properly position the aircraft, vehicle, or equipment at the appropriate hold line/sign or designated point. The requirements in **P**ara 3–1–12, Visually Scanning Runways, remain valid as appropriate.*

No Change

OLD

4–1–1. ALTITUDE AND DISTANCE LIMITATIONS

When specifying a route other than an established airway or route, do not exceed the limitations in the table on any portion of the route which lies within controlled airspace. (For altitude and distance limitations, see TBL 4–1–1, TBL 4–1–2, TBL 4–1–3, and TBL 4–1–4.) (For correct application of altitude and distance limitations see FIG 4–1–1 and FIG 4–1–2.)

REFERENCE–
FAAO JO 7110.65, Para 4–1–5, Fix Use.
FAAO JO 7110.65, Para 5–6–2, Methods.

TBL 4-1-1 through ***TBL 4-1-3***

TBL 4-1–4
MLS
Usable Height and Distance

NEW

4–1–1. ALTITUDE AND DISTANCE LIMITATIONS

When specifying a route other than an established airway or route, do not exceed the limitations in the table on any portion of the route which lies within controlled airspace. (For altitude and distance limitations, see TBL 4–1–1, TBL 4–1–2 **and** TBL 4–1–3.) (For correct application of altitude and distance limitations see FIG 4–1–1 and FIG 4–1–2.)

No Change

No Change

Delete

Height (feet) above transmitter	Distance (miles from transmitter)
20,000	20 (for glideslope)
20,000	20 (for azimuth)
*Use the current flight check height/altitude limitations if different from the above minima.	

OLD

4–6–4. HOLDING INSTRUCTIONS

Title through **e**

NOTE–
It is mandatory for the controller to issue left or right turns every time a holding pattern is issued for MLS.

NEW

4–6–4. HOLDING INSTRUCTIONS

No Change

Delete

OLD

4–7–5. MILITARY TURBOJET EN ROUTE DESCENT

Title through **b3**

EXAMPLE–
"Expect ILS/MLS approach to runway eight; radar vectors to localizer/azimuth course. Weather (reported weather)."

NEW

4–7–5. MILITARY TURBOJET EN ROUTE DESCENT

No Change

EXAMPLE–
"Expect ILS approach to runway eight; radar vectors to localizer course. Weather (reported weather)."

OLD

4–7–10. APPROACH INFORMATION

Title through **c**

d. Advise pilots when the ILS/MLS on the runway in use is not operational if that ILS/MLS is on the same frequency as an operational ILS/MLS serving another runway.

NEW

4–7–10. APPROACH INFORMATION

No Change

d. Advise pilots when the ILS on the runway in use is not operational if that ILS is on the same frequency as an operational ILS serving another runway.

OLD

4–7–13. SWITCHING ILS/MLS RUNWAYS

TERMINAL

When a change is made from one ILS to another or from one MLS to another at airports equipped with multiple systems which are not used simultaneously, coordinate with the facilities which use the fixes formed by reference to these NAVAIDs.

NEW

4–7–13. SWITCHING ILS RUNWAYS

No Change

When a change is made from one ILS to another at airports equipped with multiple systems which are not used simultaneously, coordinate with the facilities which use the fixes formed by reference to these NAVAIDs.

OLD

5–1–13. RADAR SERVICE TERMINATION

Title through **b**

NOTE–
1. *Termination of radar monitoring when conducting simultaneous ILS/MLS approaches is prescribed in para 5–9–7, Simultaneous Independent ILS/MLS Approaches– Dual & Triple.*

NEW

5–1–13. RADAR SERVICE TERMINATION

No Change

NOTE–
1. *Termination of radar monitoring when conducting simultaneous ILS approaches is prescribed in Para 5–9–7, Simultaneous Independent Approaches– Dual & Triple.*

OLD

5–9–2. FINAL APPROACH COURSE INTERCEPTION

Title through **a**

NEW

5–9–2. FINAL APPROACH COURSE INTERCEPTION

No Change

OLD

TBL 5–9–1

Approach Course Interception Angle

Distance from interception point to approach gate	Maximum interception angle
Less than 2 miles or triple simultaneous ILS/MLS approaches in use	20 degrees
2 miles or more	30 degrees (45 degrees for helicopters)

NEW

TBL 5–9–1

Approach Course Interception Angle

Distance from interception point to approach gate	Maximum interception angle
Less than 2 miles or triple simultaneous approaches in use	20 degrees
2 miles or more	30 degrees (45 degrees for helicopters)

OLD

5–9–4. ARRIVAL INSTRUCTIONS

Title through **c1**

2. Assigned an altitude to maintain until the aircraft is established on a segment of a published route or instrument approach procedure.
(See FIG 5–9–2 thru FIG 5–9–4.)

FIG 5–9–2
Arrival Instructions

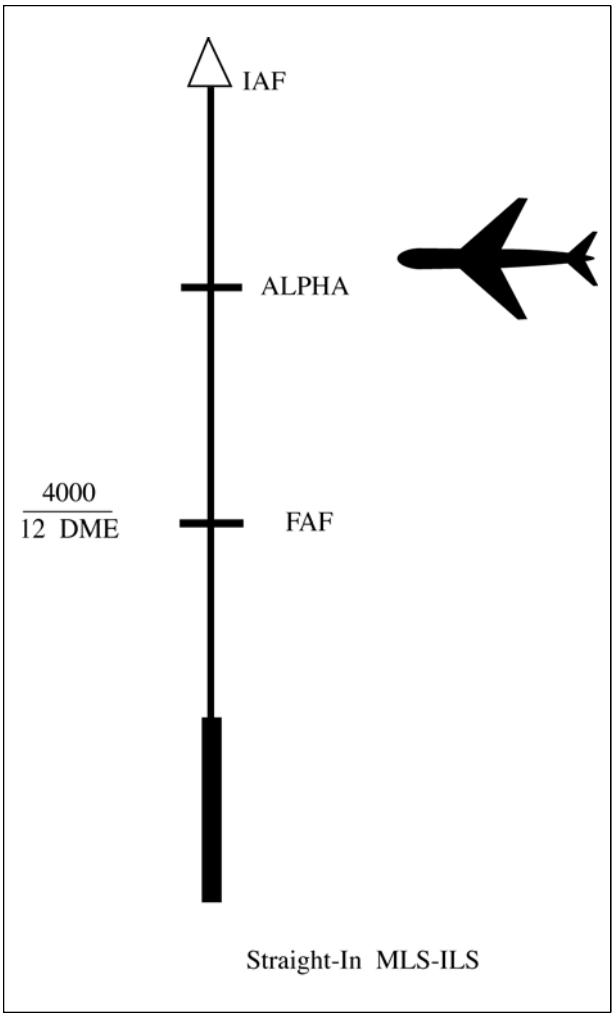

EXAMPLE–
The aircraft is being vectored to a published segment of the MLS final approach course, 3 miles from Alpha at 4,000 feet. The MVA for this area is 4,000 feet. "Three miles from Alpha. Turn left heading two one zero. Maintain four thousand until established on the azimuth course. Cleared M–L–S runway one eight approach."
(See FIG 5–9–2.)

NEW

5–9–4. ARRIVAL INSTRUCTIONS

No Change

2. Assigned an altitude to maintain until the aircraft is established on a segment of a published route or instrument approach procedure.

Delete

Delete

FIG 5−9−3
Arrival Instructions

Delete

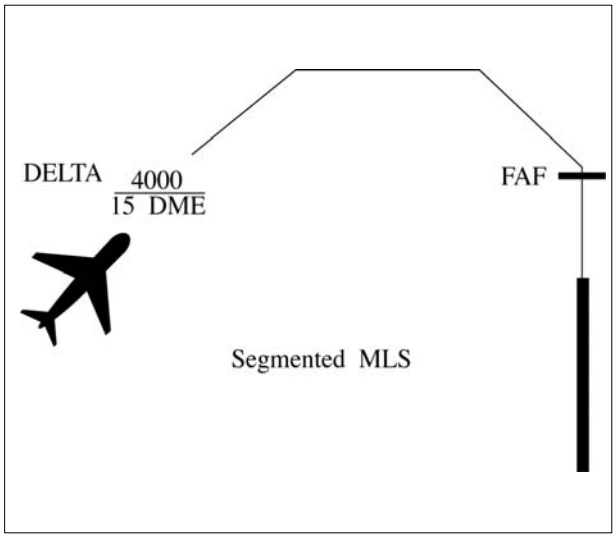

EXAMPLE−
The aircraft is en route to Delta waypoint at 6,000 feet. The MVA for this area is 4,000 feet. "Cross Delta at or above four thousand. Cleared M−L−S runway one eight approach." (See FIG 5−9−3.)

Delete

FIG 5−9−4
Arrival Instructions

Delete

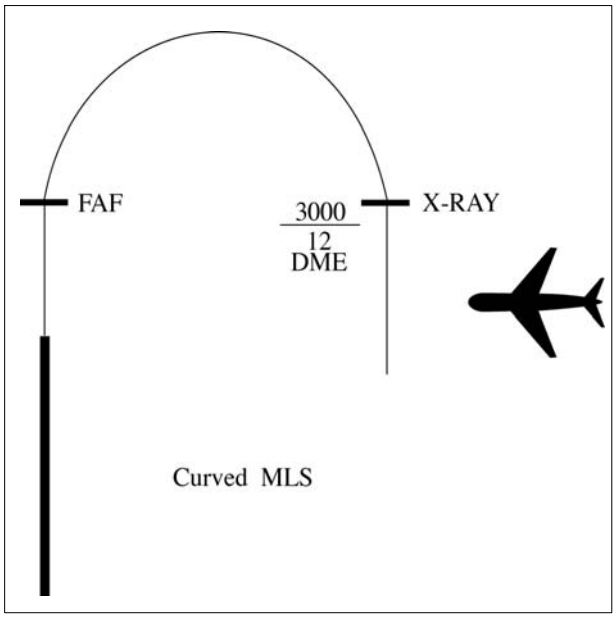

EXAMPLE–
The aircraft is being vectored to an MLS curved approach, 3 miles from X-ray at 3,000 feet. "Three miles from X-ray. Turn right heading three three zero. Maintain three thousand until established on the azimuth course. Cleared M–L–S runway one eight approach."
(See FIG 5–9–4.)

Delete

FIG 5-9-5

Renumber to ***FIG 5-9-2***

EXAMPLE through **c2** ***NOTE*** **2**

No Change

NOTE–
3. *Aircraft being vectored to the intermediate fix in FIG 5–9–5 must meet all the provisions described in subpara 4–8–1b4.*

NOTE–
3. *Aircraft being vectored to the intermediate fix in FIG 5–9–2 must meet all the provisions described in subpara 4–8–1h2.*

d through **d4** ***NOTE***

No Change

REFERENCE–
FAAO JO 7110.65, Para 5–9–2, Final Approach Course Interception. FAAO JO 7110.65, Para 5–9–7, Simultaneous Independent ILS/MLS Approaches– Dual & Triple.

REFERENCE–
FAAO JO 7110.65, Para 5–9–2, Final Approach Course Interception. FAAO JO 7110.65, Para 5–9–7, Simultaneous Independent Approaches– Dual & Triple

e. Where a Terminal Arrival Area (TAA) has been established to support RNAV approaches, inform the aircraft of its position relative to the appropriate IAF and issue the approach clearance. (See FIG 5–9–6.)

e. Where a Terminal Arrival Area (TAA) has been established to support RNAV approaches, inform the aircraft of its position relative to the appropriate IAF and issue the approach clearance. (See FIG 5–9–3.)

EXAMPLE 1 through ***EXAMPLE 3***

No Change

FIG 5-9-6

Renumber to ***FIG 5-9-3***

OLD

5–9–5. APPROACH SEPARATION RESPONSIBILITY

Title through **b**

REFERENCE–
FAAO JO 7110.65, Para 5–4–6, Receiving Controller Handoff. FAAO JO 7110.65, Para 5–9–2, Final Approach Course Interception. FAAO JO 7110.65, Para 5–9–6, Parallel Dependent ILS/MLS Approaches.
FAAO JO 7110.65, Para 6–7–2, Approach Sequence.

NEW

5–9–5. APPROACH SEPARATION RESPONSIBILITY

No Change

REFERENCE–
FAAO JO 7110.65, Para 5–4–6, Receiving Controller Handoff. FAAO JO 7110.65, Para 5–9–2, Final Approach Course Interception. FAAO JO 7110.65, Para 5–9–6, Simultaneous Dependent Approaches.
FAAO JO 7110.65, Para 6–7–2, Approach Sequence.

OLD

5–9–6. SIMULTANEOUS DEPENDENT APPROACHES

Title through **a2**

FIG 5-9-7

EXAMPLE–
In FIG 5–9–7, Aircraft 2 is 1.0 mile from Aircraft 1. Approved radar separation must be maintained between Aircraft 1 and Aircraft 3.

a3

FIG 5-9-8

NEW

5–9–6. SIMULTANEOUS DEPENDENT APPROACHES

No Change

Renumber to ***FIG 5-9-4***

EXAMPLE–
In FIG 5–9–4, Aircraft 2 is 1.0 mile from Aircraft 1. Approved radar separation must be maintained between Aircraft 1 and Aircraft 3.

No Change

Renumber to ***FIG 5-9-5***

EXAMPLE–
In FIG 5–9–8, Aircraft 2 is 1.5 miles from Aircraft 1, and Aircraft 3 is 1.5 miles or more from Aircraft 2. Approved radar separation must be maintained between aircraft on the same final.

a4

FIG 5-9-9

EXAMPLE–
*In FIG 5–9–9, Aircraft 2 is 2 miles from heavy Aircraft 1. Aircraft 3 is a small aircraft and is 6 miles from Aircraft 1. *The resultant separation between Aircraft 2 and 3 is at least 4.2 miles*

OLD

5–9–9. SIMULTANEOUS OFFSET INSTRUMENT APPROACHES (SOIA)– HIGH UPDATE RADAR

Title through **g3**

4. Issue all applicable wake turbulence advisories.

REFERENCE–
FAAO JO 8260.49, Para 13.0, Wake Turbulence Requirements.
FAAO JO 7210.3, Para 10–4–6, Simultaneous ILS/MLS Approaches.
FAAO JO 7110.65, Para 2–1–20, Wake Turbulence Cautionary Advisories.
FAAO JO 7110.65, Para 5–5–4 , Minima

OLD

5–13–1. MONITOR ON PAR EQUIPMENT

Title to ***NOTE***

NOTE–
1. *The provisions of this section do not apply to monitoring simultaneous ILS, MLS, or ILS and MLS approaches.*

NOTE 2 through **2c**

REFERENCE–
FAAO JO 7110.65, Para 5–9–7, Simultaneous Independent ILS/MLS Approaches– Dual & Triple.

OLD

5–13–3. MONITOR INFORMATION

Title through **e**

f. Provide azimuth monitoring only at locations where the MLS glidepath and the PAR glidepath are not coincidental.

REFERENCE–
FAAO JO 7110.65, Para 5–1–13, Radar Service Termination.

EXAMPLE–
*In FIG 5–9–**5**, Aircraft 2 is 1.5 miles from Aircraft 1, and Aircraft 3 is 1.5 miles or more from Aircraft 2. Approved radar separation must be maintained between aircraft on the same final.*

No Change

Renumber to ***FIG 5-9-6***

EXAMPLE–
*In FIG 5–9–6, Aircraft 2 is 2 miles from heavy Aircraft 1. Aircraft 3 is a small aircraft and is 6 miles from Aircraft 1. *The resultant separation between Aircraft 2 and 3 is at least 4.2 miles*

NEW

5–9–9. SIMULTANEOUS OFFSET INSTRUMENT APPROACHES (SOIA)– HIGH UPDATE RADAR

No Change

4. Issue all applicable wake turbulence advisories.

REFERENCE–
FAAO JO 8260.49, Para 13.0, Wake Turbulence Requirements.
*FAAO JO 7210.3, Para 10–4–6, Simultaneous **Independent** Approaches.*
FAAO JO 7110.65, Para 2–1–20, Wake Turbulence Cautionary Advisories.
FAAO JO 7110.65, Para 5–5–4 , Minima

NEW

5–13–1. MONITOR ON PAR EQUIPMENT

No Change

NOTE–
1. *The provisions of this section do not apply to monitoring simultaneous approaches.*

No Change

REFERENCE–
FAAO JO 7110.65, Para 5–9–7, Simultaneous Independent Approaches– Dual & Triple.

NEW

5–13–3. MONITOR INFORMATION

No Change

Delete

Delete

OLD	NEW
13–1–8. RECORDING OF CONTROL DATA	**13–1–8. RECORDING OF CONTROL DATA**
Title through **e** ***NOTE***	No Change
TBL 13–1–2 Miscellaneous Abbreviations	***TBL 13–1–2*** Miscellaneous Abbreviations
MLS - MLS approach	Delete
TBL 13–1–3 EDST Equivalents for Control Information Symbols	***TBL 13–1–3*** EDST Equivalents for Control Information Symbols
ARC *mi. dir.*– DME arc of VORTAC, TACAN, or MLS	ARC *mi. dir.* – DME arc of VORTAC **or** TACAN

---

1. PARAGRAPH NUMBER AND TITLE: 2–3–6. AIRCRAFT TYPE

2. BACKGROUND: The International Civil Aviation Organization (ICAO) formulates aircraft type designators for the world's aircraft that will most likely receive air traffic services. ICAO provides this information through ICAO Document 8643, Aircraft Type Designators, which is updated at least annually. FAA supplements the ICAO information and publishes it through two documents: FAA Order JO 7340.2, Contractions, and FAA Order JO 7110.65, Air Traffic Control. These FAA documents didn't contain all the aircraft listed by ICAO and the FAA documents contained dissimilar information.

3. CHANGE:

OLD	NEW
2–3–6. AIRCRAFT TYPE	**2–3–6. AIRCRAFT TYPE**
Use the approved codes listed in Appendix A through C to indicate aircraft type.	Use the **approved aircraft type designator, in accordance with FAA Order 7360.1, Aircraft Type Designators.**

---

1. PARAGRAPH NUMBER AND TITLE:
2-6-2. HAZARDOUS INFLIGHT WEATHER ADVISORY SERVICE
2-9-3. CONTENT

2. BACKGROUND: The proposed change to realign the En Route Flight Advisory Service (EFAS), known as "Flight Watch" in air-to-ground communications, to the Inflight position is part of an effort by Flight Service to modernize and streamline service delivery in order to increase efficiencies and value for its stakeholders. When EFAS was introduced in 1972, EFAS specialists received advanced training in aviation weather which included translating data received from radar and satellite displays. At the time, only flight service stations providing EFAS services had access to these products. Currently, all CONUS flight service specialists have access to common weather displays, such as radar and satellite imagery, as well as other weather products which were previously available only to EFAS specialists. Today, a pilot contacting Flight Watch for updated weather information is not able to obtain NOTAM information or flight planning services and must contact Flight Service on a different frequency. With this new approach, a pilot can obtain all services that Flight Service has to offer with one call. The elimination of overlapping services will allow for a smarter, more strategic allocation of limited resources.

3. CHANGE:

OLD

2–6–2. HAZARDOUS INFLIGHT WEATHER ADVISORY SERVICE (HIWAS)

Title through **a** ***NOTE***

PHRASEOLOGY–
ATTENTION ALL AIRCRAFT. HAZARDOUS WEATHER INFORMATION (SIGMET, Convective SIGMET, AIRMET, Urgent Pilot Weather Report (UUA), or Center Weather Advisory (CWA), Number or Numbers) FOR (geographical area) AVAILABLE ON HIWAS, FLIGHT WATCH, OR FLIGHT SERVICE FREQUENCIES.

b. Controllers outside of commissioned HIWAS areas must:

1. Advise pilots of the availability of hazardous weather advisories. Pilots requesting additional information should be directed to contact the nearest Flight Watch or Flight Service.

b2

PHRASEOLOGY–
ATTENTION ALL AIRCRAFT. HAZARDOUS WEATHER INFORMATION FOR (geographical area) AVAILABLE FROM FLIGHT WATCH OR FLIGHT SERVICE.

NEW

2–6–2. HAZARDOUS INFLIGHT WEATHER ADVISORY SERVICE (HIWAS)

No Change

PHRASEOLOGY–
ATTENTION ALL AIRCRAFT. HAZARDOUS WEATHER INFORMATION (SIGMET, Convective SIGMET, AIRMET, Urgent Pilot Weather Report (UUA), or Center Weather Advisory (CWA), Number or Numbers) FOR (geographical area) AVAILABLE ON HIWAS OR FLIGHT SERVICE FREQUENCIES.

b. Controllers outside of commissioned HIWAS areas must:

1. Advise pilots of the availability of hazardous weather advisories. Pilots requesting additional information should be directed to contact the nearest Flight Service.

No Change

PHRASEOLOGY–
ATTENTION ALL AIRCRAFT. HAZARDOUS WEATHER INFORMATION FOR (geographical area) AVAILABLE FROM FLIGHT SERVICE.

OLD

2–9–3. CONTENT

Title through **l**

m. Instructions for the pilot to acknowledge receipt of the ATIS message by informing the controller on initial contact.

EXAMPLE–
"Boston Tower Information Delta. One four zero zero Zulu. Wind two five zero at one zero. Visibility one zero. Ceiling four thousand five hundred broken. Temperature three four. Dew point two eight. Altimeter three zero one zero. ILS–DME Runway Two Seven Approach in use. Departing Runway Two Two Right. Hazardous Weather Information for (geographical area) available on HIWAS, Flight Watch, or Flight Service Frequencies. Advise on initial contact you have Delta."

NEW

2–9–3. CONTENT

No Change

No Change

EXAMPLE–
"Boston Tower Information Delta. One four zero zero Zulu. Wind two five zero at one zero. Visibility one zero. Ceiling four thousand five hundred broken. Temperature three four. Dew point two eight. Altimeter three zero one zero. ILS–DME Runway Two Seven Approach in use. Departing Runway Two Two Right. Hazardous Weather Information for (geographical area) available on HIWAS or Flight Service Frequencies. Advise on initial contact you have Delta."

1. PARAGRAPH NUMBER AND TITLE: 2-6-4. WEATHER AND CHAFF SERVICES

2. BACKGROUND: Instrument flight procedures with published crossing restrictions have been in use for many years. Continued evolution and expanded use of these procedures results in the need to clarify the actions required when an aircraft is issued a clearance to deviate for weather off a procedure that contains published altitude restrictions. Existing guidance does not capture the need to issue an altitude to maintain after aircraft are cleared to deviate from Climb Via or Descend Via clearances, or even the need to issue an altitude when deviating after a basic crossing altitude has been issued. Without an assigned altitude or a published fix to rejoin, Flight Management Systems may no longer process crossing altitudes and in the case of Climb or Descend Via clearances, VNAV may revert to a SID/STAR's top or bottom altitude.

3. CHANGE:

OLD	NEW
2-6-4 WEATHER AND CHAFF SERVICES	**2-6-4 WEATHER AND CHAFF SERVICES**
Title through **g1**	No Change
Add	**2. When approving a weather deviation for an aircraft that had previously been issued a crossing altitude, including Climb Via or Descend Via clearances, issue an altitude to maintain along with the clearance to deviate. If you intend on clearing the aircraft to resume the procedure, advise the pilot.**
Add	***PHRASEOLOGY–*** ***DEVIATION (restrictions if necessary) APPROVED, MAINTAIN (altitude), (if applicable) EXPECT TO RESUME (SID, STAR, etc.) AT (NAVAID, fix, waypoint)***
Add	***NOTE–*** ***After a Climb Via or Descend Via clearance has been issued, a vector/deviation off of a SID/STAR cancels the altitude restrictions on the procedure. The aircraft's Flight Management System (FMS) may be unable to process crossing altitude restrictions once the aircraft leaves the SID/STAR lateral path. Without an assigned altitude, the aircraft's FMS may revert to leveling off at the altitude set by the pilot, which may be the SID/STAR's published top or bottom altitude.***
Add	***REFERENCE–*** ***FAAO JO 7110.65, Para 4-2-5, Route or Altitude Amendments*** ***FAAO JO 7110.65, Para 5-6-2, Methods***
g2 through **g4**	Renumber **g3** through **g5**

1. PARAGRAPH NUMBER AND TITLE: 2-10-1. EN ROUTE SECTOR TEAM POSITION RESPONSIBILITIES

2. BACKGROUND: In support of the ATO positive safety culture, several changes are being made to sections in this Order and in FAA Order JO 7210.3, Facility Operations and Administration, to shift away from allusions to "blame" and remove terms such as "operational error/deviation." This change also clarifies the same concept may be applied to en route or oceanic sector teams.

3. CHANGE:

OLD	NEW
2-10-1. EN ROUTE SECTOR TEAM POSITION RESPONSIBILITIES	**2-10-1. EN ROUTE OR OCEANIC SECTOR TEAM POSITION RESPONSIBILITIES**
a. En Route Sector Team Concept and Intent:	**a.** En Route **or Oceanic** Sector Team Concept and Intent: **There are no absolute divisions of responsibilities regarding position operations. The tasks to be completed remain the same whether one, two, or three people are working positions within a sector. The team, as a whole, has responsibility for the safe and efficient operation of that sector.**
1. There are no absolute divisions of responsibilities regarding position operations. The tasks to be completed remain the same whether one, two, or three people are working positions within a sector. The team, as a whole, has responsibility for the safe and efficient operation of that sector.	Delete
2. The intent of the team concept is not to hold the team accountable for the action of individual members, in the event of an operational accident/incident.	Delete

---

1. PARAGRAPH NUMBER AND TITLE: 2-10-2. TERMINAL RADAR/NONRADAR TEAM RESPONSIBILITIES

2. BACKGROUND: In support of the ATO positive safety culture, several changes are being made to sections in this Order and in FAA Order JO 7210.3, Facility Operations and Administration, to shift away from allusions to "blame" and to remove terms such as "operational error/deviation."

3. CHANGE:

OLD	NEW
2-10-2. TERMINAL RADAR/NONRADAR TEAM RESPONSIBILITIES	**2-10-2. TERMINAL RADAR/NONRADAR TEAM RESPONSIBILITIES**
a. *Terminal Radar Team Concept and Intent:*	**a.** *Terminal Radar Team Concept and Intent:* **There are no absolute divisions of responsibilities regarding position operations. The tasks to be completed remain the same whether one, two, or three people are working positions within a facility/sector. The team, as a whole, has responsibility for the safe and efficient operation of that facility/sector.**

1. There are no absolute divisions of responsibilities regarding position operations. The tasks to be completed remain the same whether one, two, or three people are working positions within a facility/sector. The team, as a whole, has responsibility for the safe and efficient operation of that facility/sector.	Delete
2. The intent of the team concept is not to hold the team accountable for the action of individual members in the event of an operational error/deviation.	Delete

---

1. PARAGRAPH NUMBER AND TITLE: 2-10-3. TOWER TEAM RESPONSIBILITIES

2. BACKGROUND: This change reflects support of the ATO positive safety culture. In keeping with that culture, several changes are being made to sections in this Order and in FAA Order JO 7210.3, Facility Operation and Administration, to shift away from allusions to "blame" and to remove terms such as "operational error/deviation."

3. CHANGE:

OLD	NEW
2–10–3. TOWER TEAM RESPONSIBILITIES	**2–10–3. TOWER TEAM RESPONSIBILITIES**
a. *Tower Team Concept and Intent:*	**a.** *Tower Team Concept and Intent:* **There are no absolute divisions of responsibilities regarding position operations. The tasks to be completed remain the same whether one, two, or three people are working positions within a facility/sector. The team, as a whole, has responsibility for the safe and efficient operation of that facility/sector.**
1. There are no absolute divisions of responsibilities regarding position operations. The tasks to be completed remain the same whether one, two, or three people are working positions within a facility/sector. The team, as a whole, has responsibility for the safe and efficient operation of that facility/sector.	Delete
2. The intent of the team concept is not to hold the team accountable for the action of individual members in the event of an operational error/deviation.	Delete

---

1. PARAGRAPH NUMBER AND TITLE: 3-3-7. FAR FIELD MONITOR (FFM) REMOTE STATUS UNIT

2. BACKGROUND: A change in CFR 14 Section 91.175 (k) published in 2005 eliminated the need for middle markers as a component for an Instrument Landing System (ILS). Meanwhile, Flight Standards Service policy allows for the elimination of outer markers (OM) and inner markers (IM) where they no longer serve their original need. Many of these NAVAIDS have since been decommissioned. It has become necessary to revise FAA Order JO 7110.65, Para 3-3-7, FAR FIELD MONITOR (FFM) REMOTE STATUS UNIT to reflect these changes.

3. CHANGE:

OLD	NEW
3-3-7. FAR FIELD MONITOR (FFM) REMOTE STATUS UNIT	**3-3-7. FAR FIELD MONITOR (FFM) REMOTE STATUS UNIT**
Title through **e**	No Change
1. The aircraft is outside the middle marker (MM), check for encroachment those portions of the critical area that can be seen from the tower. It is understood that the entire critical area may not be visible due to low ceilings and poor visibility. The check is strictly to determine possible causal factors for the out-of-tolerance situation. If the alarm has not cleared prior to the aircraft's arriving at the MM, immediately issue an advisory that the FFM remote status sensing unit indicates the localizer is unreliable.	**1.** The aircraft is outside the middle marker (MM) **or in the absence of a MM, 1/2 mile final,** check for encroachment **of** those portions of the critical area that can be seen from the tower. It is understood that the entire critical area may not be visible due to low ceilings and poor visibility. The check is strictly to determine possible causal factors for the out-of-tolerance situation. If the alarm has not cleared prior to the aircraft's arriving at the MM **or in the absence of a MM, 1/2 mile final,** immediately issue an advisory that the FFM remote status sensing unit indicates the localizer is unreliable.
2. The aircraft is between the MM and the inner marker (IM), immediately issue an advisory that the FFM remote status sensing unit indicates the localizer is unreliable.	**2.** The aircraft is between the MM **or 1/2 mile final** and the inner marker (IM)**, or if the IM is not installed, the CAT II Missed Approach Point (MAP),** immediately issue an advisory that the FFM remote status sensing unit indicates the localizer is unreliable.
PHRASEOLOGY	No Change
3. The aircraft has passed the IM, there is no action requirement. Although the FFM has been modified with filters which dampen the effect of false alarms, you may expect alarms when aircraft are located between the FFM and the localizer antenna either on landing or on takeoff.	**3.** The aircraft has passed the IM **or the CAT II MAP (if the IM is not installed)** there is no action requirement. Although the FFM has been modified with filters which dampen the effect of false alarms, you may expect alarms when aircraft are located between the FFM and the localizer antenna either on landing or on takeoff.

1. PARAGRAPH NUMBER AND TITLE: 3-8-1. SEQUENCE/SPACING APPLICATION

2. BACKGROUND: The following is a response to the Runway Safety Group Root Cause Analysis Team review of a runway incursion event at Kansas City Downtown (KMKC). The cause was a helicopter pilot that elected to hover over the runway after being issued a cleared for the option.

3. CHANGE:

OLD	NEW
3–8–1. SEQUENCE/SPACING APPLICATION	**3–8–1. SEQUENCE/SPACING APPLICATION**
Title through ***PHRASEOLOGY***	No Change
NOTE– *1. The "Cleared for the Option" procedure will permit an instructor pilot/flight examiner/pilot the option to make a touch-and-go, low approach, missed approach, stopand-go, or full stop landing. This procedure will only be used at those locations with an operational control tower and will be subject to ATC approval.*	***NOTE–*** *1. The "Cleared for the Option" procedure will permit an instructor pilot/flight examiner/pilot the option to make a touch-and-go, low approach, missed approach, stop-and-go, or full stop landing. This procedure will only be used at those locations with an operational control tower and will be subject to ATC approval.* ***After ATC approval of the option, the pilot should inform ATC as soon as possible of any delay on the runway during their stop-and-go or full stop landing.***
NOTE 2 *and* ***NOTE 3***	No Change
Add	***REFERENCE–*** *FAAO JO 7110.65, Para 3–7–2, Taxi and Ground Movement Operations.* ***AIM, Para 4–3–22, Option Approach***

---

1. PARAGRAPH NUMBER AND TITLE: 3-9-6. SAME RUNWAY SEPARATION

2. BACKGROUND: Paragraph 3-9-6 refers to departing aircraft and how to separate a departing aircraft from previous departing or arriving aircraft. In subparagraph "a" references are made to FIG 3-9-1 and FIG 3-9-2 and both of these figures show the departure aircraft on the runway, shaded, with the previous departing aircraft depicted in outline form. In subparagraph "b" a reference is made to FIG 3-9-3 that is intended to depict a departing aircraft from a preceding arriving aircraft. The preceding arriving aircraft is correctly depicted in outline form, consistent with previous figures in this chapter. However, while the departure is shaded consistent with the two previous figures in this chapter, it is not depicted on the runway.

3. CHANGE:

OLD

3-9-6. SAME RUNWAY SEPARATION

Title through **a**

FIG 3–9–2

Same Runway Separation

NOTE–

Aircraft same runway separation (SRS) categories are specified in Appendices A, B, and C and based upon the following definitions:

CATEGORY I – small aircraft weighing 12,500 lbs. or less, with a single propeller driven engine, and all helicopters.

CATEGORY II – small aircraft weighing 12,500 lbs. or less, with propeller driven twin –engines.

CATEGORY III – all other aircraft.

NEW

3-9-6. SAME RUNWAY SEPARATION

No Change

NOTE–

Aircraft same runway separation (SRS) categories are specified in ***FAA Order ,JO 7360.1, Aircraft Type Designators*** *and based upon the following definitions:*

CATEGORY I – small ***single–engine propeller driven*** *aircraft weighing 12,500 lbs. or less, and all helicopters.*

CATEGORY II – small ***twin–engine propeller driven*** *aircraft weighing 12,500 lbs. or less.*

CATEGORY III – all other aircraft.

OLD

FIG 3–9–3

Preceding Landing Aircraft Clear of Runway

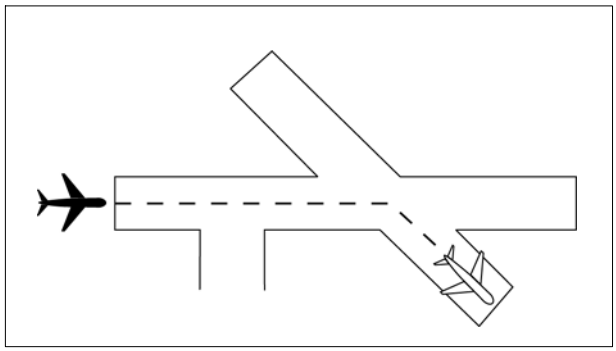

NEW

FIG 3–9–3

Preceding Landing Aircraft Clear of Runway

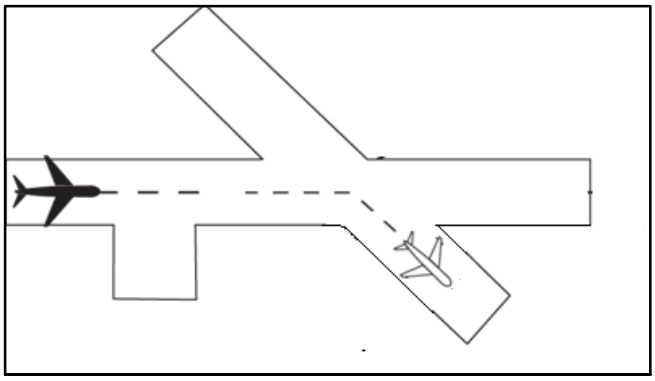

1. PARAGRAPH NUMBER AND TITLE: 3-9-9. NONINTERSECTING CONVERGING RUNWAY OPERATIONS

2. BACKGROUND: The placement of paragraph 3-9-9, 2e may result in the conclusion that the procedures are only required for operations requiring wake turbulence application. In fact, the provisions of this paragraph should be applied for all converging runway operations.

3. CHANGE:

OLD	NEW
3-9-9. NONINTERSECTING CONVERGING RUNWAY OPERATION	**3-9-9. NONINTERSECTING CONVERGING RUNWAY OPERATION**
Title through **a2**	No Change
FIG–3–9–12 **Intersecting Runway Separation**	
Add	**b. If the extended centerline of a runway crosses a converging runway or the extended centerline of a converging runway at a distance of 1NM or less from either departure end, apply the provisions of Pragraph 3–9–8, Intersecting Runway Separation, unless: The facility is using aids specified in a facility directive, (may include but are not limited to, Arrival/Departure Window (ADW), ASDE–X Virtual Runway Intersection Point (VRIP), cut–off points or automation). (See FIG 3–9–15 and FIG 3–9–16).**
Add	***REFERENCE– FAAO JO 7210.3, Para 10-3-14, Go-Around/Missed Approach***
WAKE TURBULENCE APPLICATION	No Change
Add	***FIG 3–9–13*** Intersecting Runway Separation

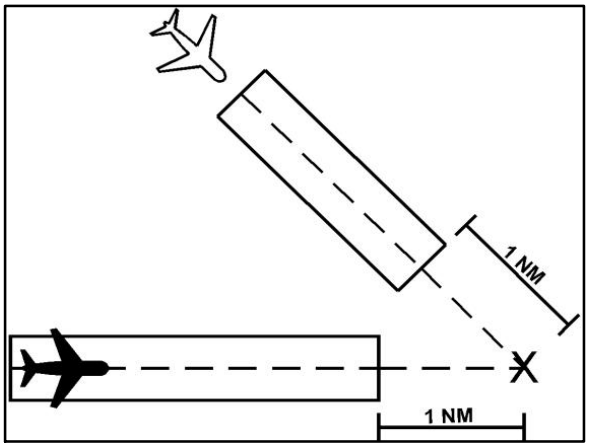

Add

FIG 3–9–14
Intersecting Runway Separation

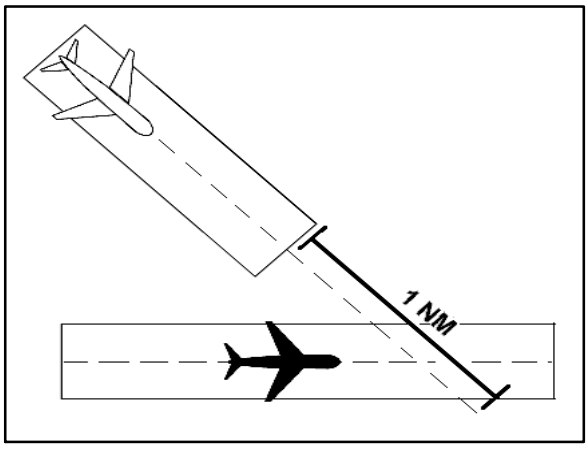

b. Separate IFR/VFR aircraft taking off behind a departing aircraft on a crossing runway if projected flight paths will cross (See FIG 3–9–13).

1. Heavy, large, or small behind super – *3 minutes.*

2. Heavy, large, or small behind heavy – *2 minutes.*

3. Small behind B757 – *2 minutes.*

FIG 3–9–13
Intersecting Runway Separation

NOTE–
Takeoff clearance to the following aircraft should not be issued until the time interval has passed from when the preceding aircraft began takeoff roll.

c. Separate IFR/VFR aircraft departing behind a landing aircraft on a crossing runway if the departure will fly through the airborne path of the arrival (See FIG 3–9–**14**).

1. Heavy, large, or small behind super – 3 minutes.

2. Heavy, large, or small behind heavy – 2 minutes.

3. Small behind B757 – 2 minutes.

FIG 3–9–14
Intersecting Runway Separation

d. Do not approve pilot requests to deviate from the required time interval if the preceding aircraft requires wake turbulence separation.

REFERENCE–
FAAO JO 7110.65, Para 5-8-3, Successive or Simultaneous Departures.
FAAO JO 7110.65, Para 5-8-5, Departures and Arrivals on Parallel or Nonintersecting Diverging Runways.
FAAO JO 7110.65, Para 5-5-4, Minima, Subparagraph g.

c. Separate IFR/VFR aircraft taking off behind a departing aircraft on a crossing runway if projected flight paths will cross (See FIG 3–9–**15**).

No Change

No Change

No Change

FIG 3–9–15
Intersecting Runway Separation

No Change

d. Separate IFR/VFR aircraft departing behind a landing aircraft on a crossing runway if the departure will fly through the airborne path of the arrival (See FIG 3–9–**16**).

No Change

No Change

No Change

FIG 3–9–16
Intersecting Runway Separation

e. Do not approve pilot requests to deviate from the required time interval if the preceding aircraft requires wake turbulence separation.

No Change

e. If the extended centerline of a runway crosses a converging runway or the extended centerline of a converging runway at a distance of 1NM or less from either departure end, apply the provisions of Paragraph 3-9-8, Intersecting Runway Separation, unless: The facility is using aids specified in a facility directive, (may include but are not limited to, Arrival/Departure Window (ADW), ASDE-X Virtual Runway Intersection Point (VRIP), cut-off points or automation). (See FIG 3-9-15 and FIG 3-9-16.)

Delete

FIG 3–9–15

Intersecting Runway Separation

Delete

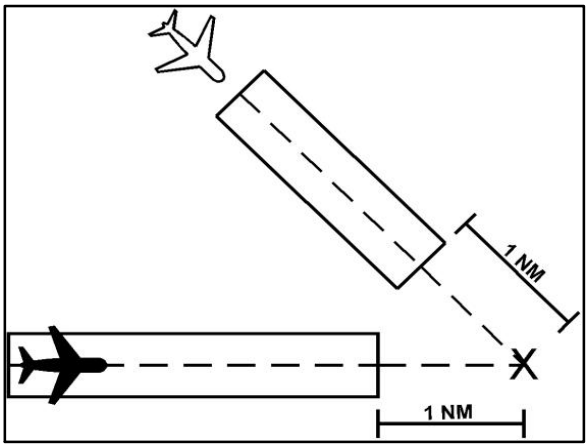

FIG 3–9–16

Intersecting Runway Separation

Delete

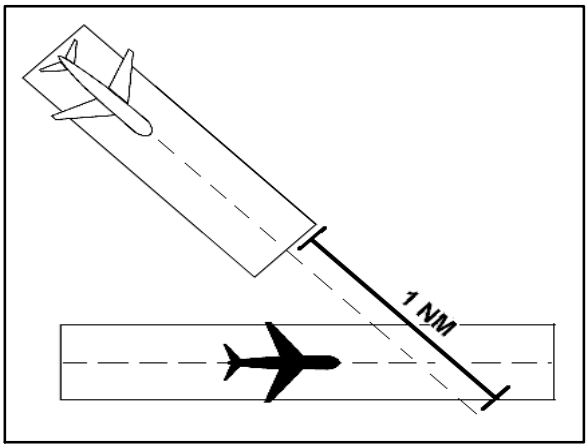

1. PARAGRAPH NUMBER AND TITLE: 3-10-5. LANDING CLEARANCE

2. BACKGROUND: Airport traffic control towers responsible for sequencing arriving aircraft employ various techniques to establish a landing sequence. Occasionally, control instructions necessary to sequence aircraft are not compatible with the phraseology "CONTINUE" specified in the example in FAA Order JO 7110.65 paragraph 3-10-5. Examples of incompatible phraseology with the word "CONTINUE" include: "EXTEND DOWNWIND, TURN BASE NOW, TURN BASE IN ONE MILE, BASE APPROVED, MAKE LEFT THREE-SIXTY", etc. When an inbound aircraft is issued a restriction such as "TOWER WILL CALL BASE" and a controller subsequently issues the instruction "CONTINUE, TRAFFIC HOLDING IN POSITION", pilots have reported uncertainty on the meaning of "CONTINUE" in this situation. Some pilots believe it means continue flying the current leg of the traffic pattern, some think it means fly a normal pattern. Similarly, some controllers report being unsure whether instructing an aircraft to "CONTINUE" deletes a previously issued control instruction.

3. CHANGE:

OLD	NEW
3–10–5. LANDING CLEARANCE	**3–10–5. LANDING CLEARANCE**
Title through **b2c**	No Change
EXAMPLE– *"Delta One, Runway One–Eight, continue, traffic holding in position."* *"Delta One, Runway One–Eight, cleared to land. Traffic holding in position."*	***EXAMPLE–*** *"Delta One, Runway One–Eight, continue, traffic holding in position."* *"Delta One, Runway One–Eight, cleared to land. Traffic holding in position."* ***"Twin Cessna Four Four Golf, Runway One-Niner base approved, traffic holding in position."*** ***"Baron Two Five Foxtrot, Runway One-Niner Right extend downwind, tower will call your base, traffic holding in position."***

---

1. PARAGRAPH NUMBER AND TITLE: 4-2-5. ROUTE OR ALTITUDE AMENDMENTS

2. BACKGROUND: Flight Standards Service recommends 4-2-5b, Note 2 be stated better to avoid any potential misinterpretation. It is not a good idea to have "mandatory" used in the same sentence with "crossing altitudes." This could potentially mislead the audience into believing all altitudes on an ODP are "mandatory altitudes," as opposed to what is correctly specified in the ODP text or graphic.

3. CHANGE:

OLD	NEW
4-2-5. ROUTE OR ALTITUDE AMENDMENTS	**4-2-5. ROUTE OR ALTITUDE AMENDMENTS**
Title through **b *NOTE* 1**	No Change
2. Crossing altitudes and speed restrictions on ODPs are mandatory and cannot be canceled by ATC.	**2.** Crossing altitudes and speed restrictions on **Obstacle Departure Procedure/s (**ODP/**s)** cannot be canceled **or amended** by ATC.

---

1. PARAGRAPH NUMBER AND TITLE: 4-3-2. DEPARTURE CLEARANCES

2. BACKGROUND: Flight Standards Service (AFS-420) has identified that paragraph 4-3-2 (c) (2) only refers to textually described obstacle departure procedures (ODP).

3. CHANGE:

OLD	NEW
4-3-2. DEPARTURE CLEARANCES	**4-3-2. DEPARTURE CLEARANCES**
Title through **c1(c)**	No Change
2. Where only textually described obstacle departure procedures (ODP) have been published for a location and pilot compliance is necessary to ensure separation, include the procedure as part of the ATC clearance.	**2.** Where **an** obstacle departure procedure (ODP) **has** been published for a location and pilot compliance is necessary to ensure separation, include the procedure as part of the ATC clearance.
Add	***EXAMPLE–*** ***"Depart via the (airport name)(runway number) departure procedure."*** ***Or*** ***"Depart via the (graphic ODP name) obstacle departure procedure."***
Add	***NOTE–*** ***Some aircraft are required by 14 CFR 91.175 to depart a runway under IFR using the ODP absent other instructions from ATC.***
Add	***NOTE–*** ***IFR takeoff minimums and obstacle departure procedures are prescribed for specific airports/runways and published in either a textual, or graphic form with the label (OBSTACLE) in the procedure title, and documented on an appropriate FAA Form 8260. To alert pilots of their existence, instrument approach procedure charts are annotated with a symbol:***
Add	
3. Do not solicit use of the Visual Climb over Airport (VCOA) option.	No Change
NOTE– *Pilots will specifically advise ATC of their intent to use the VCOA option.*	No Change
EXAMPLE– *"Depart via the (airport name) (runway number) departure procedure."*	Delete
NOTE– *IFR takeoff minimums and departure procedures are prescribed for specific airports/runways and published in a tabular form supplement to the FAA instrument approach procedure chart and appropriate FAA Form 8260. These procedures are identified on instrument approach procedure charts with a symbol:*	Delete

Delete

---

1. PARAGRAPH NUMBER AND TITLE:
4-7-12. AIRPORT CONDITIONS
4-8-1. APPROACH CLEARANCE
4-8-9. MISSED APPROACH
4-8-10. APPROACH INFORMATION

2. BACKGROUND: In response to aviation industry concerns over cold weather effect on indicated altitudes versus that of an aircraft's true altitude, the FAA completed an analysis to determine if current 14 CFR Part 97 instrument approach procedures in the United States National Airspace System are at risk of compromised required obstacle clearances (ROC) during time of extreme cold temperature. As a result of the study, all airports with runways greater than 2500 feet with instrument approach procedures were analyzed to determine which approach procedures needed compensation based on a formula that articulated the potential for a degree of ROC that could be compromised. A safety risk management panel (SRMP) was conducted on the impact to ATC operations, and a condition of the SRMP was to add content to the pertinent FAA documents to assist in pilot and controller awareness of the need to apply cold temperature compensation.

3. CHANGE:

OLD

4–7–12. AIRPORT CONDITIONS

Title through **a**

NOTE–
1. *Airport conditions information, in the provision of en route approach control service, does not include information pertaining to the airport surface environment other than the landing area(s) or obstruction information for aircraft that will be cleared for an instrument approach. Accordingly, D NOTAMs that contain the keywords TAXIWAY (TWY), RAMP, APRON, or SERVICE (SVC) are not required to be issued. Additionally, Obstruction NOTAMs (OBST) are not required to be issued if an aircraft will be cleared for an instrument approach.*

NOTE **2** through **b**

NEW

4–7–12. AIRPORT CONDITIONS

No Change

NOTE–
1. *Airport conditions information, in the provision of en route approach control service, does not include information pertaining to* ***cold temperature compensation or*** *the airport surface environment other than the landing area(s) or obstruction information for aircraft that will be cleared for an instrument approach. Accordingly, D NOTAMs that contain the keywords TAXIWAY (TWY), RAMP, APRON, or SERVICE (SVC) are not required to be issued. Additionally, Obstruction NOTAMs (OBST) are not required to be issued if an aircraft will be cleared for an instrument approach.*

No Change

OLD

4–8–1. APPROACH CLEARANCE

Title through **a5**

Add

NOTE **1**

NEW

4–8–1. APPROACH CLEARANCE

No Change

6. Controllers must not disapprove a pilot request to cold temperature compensate in conjunction with the issuance of an approach clearance.

No Change

***2**. Approach clearances are issued based on known traffic. The receipt of an approach clearance does not relieve the pilot of his/her responsibility to comply with applicable Parts of Title 14 of the Code of Federal Regulations and the notations on instrument approach charts which levy on the pilot the responsibility to comply with or act on an instruction; for example, "Straight-in minima not authorized at night," "Procedure not authorized when glideslope/glidepath not used," "Use of procedure limited to aircraft authorized to use airport," or "Procedure not authorized at night."*	***2**. Approach clearances are issued based on known traffic. The receipt of an approach clearance does not relieve the pilot of his/her responsibility to comply with applicable Parts of Title 14 of the Code of Federal Regulations and the notations on instrument approach charts which levy on the pilot the responsibility to comply with or act on an instruction; for example, "Straight-in minima not authorized at night," "Procedure not authorized when glideslope/glidepath not used," "Use of procedure limited to aircraft authorized to use airport," "Procedure not authorized at night," **or Snowflake icon with associated temperature.***
***NOTE* 3** through ***NOTE* 9**	No Change
Add	***10. Pilots are required to advise ATC when intending to apply cold temperature compensation to instrument approach segments. Pilots must advise ATC of the amount of compensation required for each affected segment on initial contact or as soon as possible. Pilots are not required to advise ATC when correcting on the final segment only. Controllers may delay the issuance of an approach clearance to comply with approved separation requirements when informed that a pilot will apply cold temperature compensation (CTC). Pilots will not apply altitude compensation, unless authorized, when assigned an altitude prior to an approach clearance. Consideration should be given to vectoring aircraft at or above the requested compensating altitude if possible. This eliminates pilots having to climb once on the approach.***
REFERENCE– *FAAO 8260.3, United States Standard for Terminal Instrument Procedures (TERPS).*	***REFERENCE–*** *FAAO 8260.3, United States Standard for Terminal Instrument Procedures (TERPS).* ***P/CG Term – Cold Temperature Compensation*** ***AIM, Paragraph 5-1-17, Cold Temperature Operations*** ***AIM, Paragraph 5-5-4, Instrument Approach***

OLD	**NEW**
4-8-9. MISSED APPROACH	**4-8-9. MISSED APPROACH**
Title through ***NOTE* 2**	No Change
Add	***NOTE–*** ***3. Pilots must advise ATC when intending to apply cold temperature compensation and of the amount of compensation required. Pilots will not apply altitude compensation, unless authorized, when assigned an altitude if provided an initial heading to fly or radar vectors in lieu of published missed approach procedures. Consideration should be given to vectoring aircraft at or above the requested compensating altitude if possible.***
Add	***REFERENCE–*** ***AIM, Paragraph 5-5-5, Missed Approach***

OLD	NEW
4-8-10. APPROACH INFORMATION	**4-8-10. APPROACH INFORMATION**
Title through **e**	No Change
Add	**f. Applicable notations on instrument approach charts which levy on the pilot the responsibility to comply with or act on an instruction; for example, "Straight-in minima not authorized at night," "Procedure not authorized when glideslope/glidepath not used," "Use of procedure limited to aircraft authorized to use airport," "Procedure not authorized at night," or a Snowflake icon indicating mandatory cold temperature compensation.**
Add	***REFERENCE–*** ***AIM, Paragraph 5-1-17, Cold Temperature Operations*** ***AIM, Paragraph 5-5-4, Instrument Approach*** ***AIM, Paragraph 5-5-5, Missed Approach***

---

1. PARAGRAPH NUMBER AND TITLE: 4-8-1. APPROACH CLEARANCE

2. BACKGROUND: In the January 2015 change to this paragraph, sub-paragraph f was revised. Content involving Radius to Fix (RF) legs was revised by removing mileage distances that were stated for the segment prior to commencing an RF leg. However, the associated FIG 4-8-5 was not changed at the time the content was revised.

3. CHANGE:

OLD	NEW
4-8-1. APPROACH CLEARANCE	**4-8-1. APPROACH CLEARANCE**
Title through **i4** ***NOTE***	No Change

OLD

FIG 4–8–5

Radius to Fix (RF) and Track to Fix (TF)

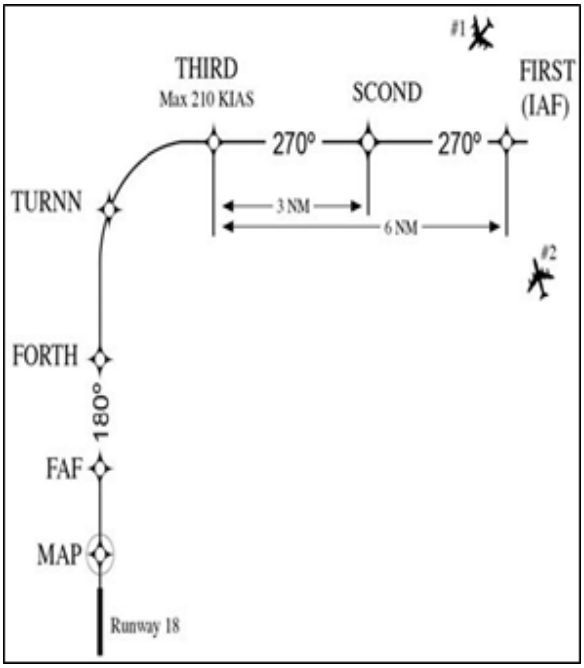

NEW

FIG 4–8–5

Radius to Fix (RF) and Track to Fix (TF)

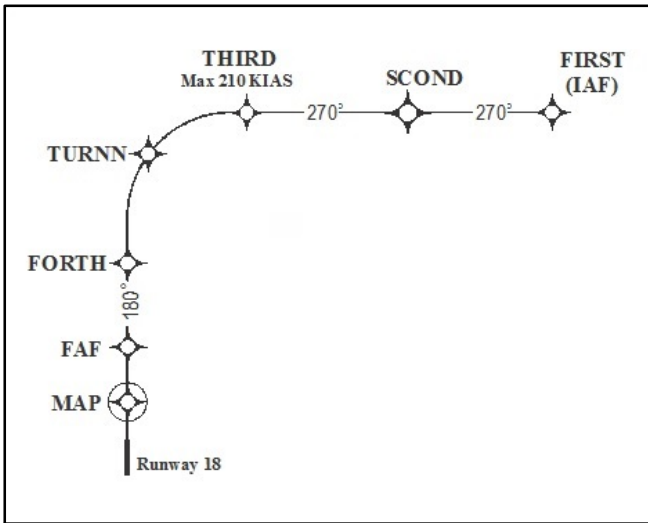

1. PARAGRAPH NUMBER AND TITLE: 5-1-3. RADAR USE

2. BACKGROUND: FAA Order JO 7110.310, Automatic Dependent Surveillance-Broadcast (ADS-B) Air Traffic Control (ATC) Services at Air Route Traffic Control Centers (ARTCCs) Using En Route Automation Modernization (ERAM) and FAA Order JO 7110.313 Wide Area Multilateration (WAM) Air Traffic Control (ATC) Services at Air Route Traffic Control Centers (ARTCCs) approved ADS-B and WAM surveillance information for use in the En Route domain as a surveillance source. Safety analyses have been completed that support the use of ADS-B and WAM targets in all areas with or without existing radar coverage.

3. CHANGE:

OLD	NEW
5-1-3. RADAR USE	**5-1-3. ATC SURVEILLANCE SOURCE USE**
Use radar information derived from primary and secondary radar systems.	Use **approved ATC surveillance sources.**
REFERENCE through **b**	No Change
Add	**c. All procedures and requirements relating to ATC services using secondary radar targets apply to ATC services provided to targets derived from ADS-B and WAM.**
Add	***NOTE–*** ***Targets derived from ADS-B and/or WAM cannot be used to provide 3NM separation in the EAS. 3NM targets are not derived from ADS-B and/or WAM within the EAS.***
Add	***REFERENCE–*** ***JO 7110.65, Para4-1-2, Exceptions.*** ***JO 7110.65, Para 4-4-2, Route Structure Transitions*** ***JO 7110.65, Para 5-5-1, Application*** ***JO 7110.65, Para 6-5-4, Minima Along Other Than Established Airways or Routes*** ***JO 7110.65, Chapter 6, Nonradar*** ***JO 7110.65, Para 5-5-4, Minima*** ***JO 7210.3 3-6-2 ATC Surveillance Source Use***

---

1. PARAGRAPH NUMBER AND TITLE: 5-4-3. METHODS

2. BACKGROUND: Since 2009 the New York Air Route Traffic Control Center has been working under a waiver that allows the use of the Computer Identification Number (CID) in lieu of using the aircraft call sign or discreet beacon code for aircraft identification under paragraph 5-4-3, METHODS, sub-paragraph b.2. This DCP incorporates the provisions of the waiver so the use of the CID is available to all Enroute facilities.

3. CHANGE:

OLD	NEW
5-4-3. METHODS	**5-4-3. METHODS**
Title through **b2(a)**	No Change
(b) The discrete beacon code of the aircraft during inter-facility point-outs only, if both the receiving and the transferring controllers agree.	**(b)** The discrete beacon code of the aircraft during inter-facility point-outs only, if both the receiving and the transferring controllers agree**, or**

Add	**(c) EN ROUTE. The Computer Identification Number (CID) during intra-facility point-outs.**
Add	***EXAMPLE–*** ***"Point Out, Southwest of Richmond VOR, C-I-D 123…"***

---

1. PARAGRAPH NUMBER AND TITLE: 5–4–6. RECEIVING CONTROLLER HANDOFF

2. BACKGROUND: Several years ago the FAA began replacing the En Route legacy computer system known as Host, with a new, NextGen enabling system known as En Route Automation Modernization (ERAM). The installation of ERAM was accomplished using a waterfall implementation process over the span of many years. During this transition period, the guidance for air traffic control services operating under ERAM was found in FAA Order JO 7110.311. Now that the transition nears completion, FAA Order 7110.311C is being incorporated into FAA Order JO 7110.65. During this process, certain outdated terms that are no longer used in the field were identified. The decision was made to use this opportunity to update the handbook by eliminating or amending the outdated terminology.

3. CHANGE:

OLD	**NEW**
5–4–6. RECEIVING CONTROLLER HANDOFF	**5–4–6. RECEIVING CONTROLLER HANDOFF**
Title through **e3**	No Change
f. Initiate verbal coordination prior to accepting control of a track when "CST," "NAT," "NT," "NONE," "NB," "NX," "OLD," "OL," "AMB," "AM," or "TU" is displayed in the data block.	**f.** Take the identified action prior to accepting control of a track when the following indicators are displayed in the data block:
1. When an automated interfacility handoff action is initiated and "AMB" or "AM" is displayed in the full data block, advise the other facility that a disparity exists between the position declared by their computer and that declared by your CARTS/PIDP/STARS system.	**1.** "AMB" and "AM": advise the other facility that a disparity exists between the position declared by their computer and that declared by your CARTS/PIDP/STARS system.
2. When an automated interfacility handoff action is initiated and "NAT," "NT," or "TU" is displayed in the full data block, advise the other facility if a disparity exists between the position declared by their computer and the actual target position.	**2.** "NAT", "NT," or "TU": advise the other facility if a disparity exists between the position declared by their computer and the actual target position.
Add	**3. "DATA", "CST", "NONE", "NX", "OLD", or "OL": initiate verbal coordination.**
Add	**g. ERAM: Notify the FLM when a MISM is displayed in the data block.**
g. Advise the transferring controller, prior to accepting the transfer of radar identification, that you will delay the climb or the descent of an aircraft through the vertical limits of the transferring controller's area of jurisdiction, unless otherwise specified in a LOA or a facility directive.	**h.** Advise the transferring controller, prior to accepting the transfer of radar identification, that you will delay the climb or the descent of an aircraft through the vertical limits of the transferring controller's area of jurisdiction, unless otherwise specified in a LOA or a facility directive.

NOTE– *Those en route facilities using HOST software that provides capability for passing interim altitude shall include the specific operations and procedures for use of this procedure in a LOA between the appropriate facilities.*	Delete
h. If you decide, *after* accepting the transfer of radar identification, to delay the aircraft's climb or descent through the vertical limits of the transferring controller's area of jurisdiction, advise the transferring controller of that decision as soon as possible.	**i.** If you decide, *after* accepting the transfer of radar identification, to delay the aircraft's climb or descent through the vertical limits of the transferring controller's area of jurisdiction, advise the transferring controller of that decision as soon as possible.
NOTE– *Those en route facilities using HOST software that provides capability for passing interim altitude shall include the specific operations and procedures for use of this procedure in a LOA between the appropriate facilities.*	Delete

---

1. PARAGRAPH NUMBER AND TITLE: 5-6-2. METHODS

2. BACKGROUND: Instrument flight procedures with published crossing restrictions have been in use for many years. Continued evolution of flight procedures has resulted in the need to clarify and supplement actions required when an aircraft is issued a clearance off a procedure that contains published altitude restrictions. Current guidance for when an aircraft is vectored off a procedure has not changed since 1980. Existing guidance does not capture the nuances surrounding Climb Via and Descend Via clearances when subsequent radar vectors are issued or aircraft are cleared to deviate from Climb Via/Descend Via procedures. Without an assigned altitude or a published fix to rejoin, Flight Management Systems may no longer calculate crossing altitudes and VNAV may revert to a SID/STAR's top or bottom altitude. In a separate issue, Flight Standards AFS-420 identified an issue with regards to Obstacle Departure Procedures (ODP). In order to be consistent with language currently found in the AIM, they recommend adding guidance to this order for when an aircraft is vectored off an Obstacle Departure Procedure (ODP).

3. CHANGE:

OLD	**NEW**
5-6-2. METHODS	**5-6-2. METHODS**
Title through **a3**	No Change
b. When initiating a vector, advise the pilot of the purpose.	**b.** When initiating a vector, advise the pilot of the purpose, **and if appropriate, what to expect when radar navigational guidance is terminated.**

PHRASEOLOGY–
VECTOR TO (fix or airway).

VECTOR TOINTERCEPT (name of NAVAID) (specified) RADIAL.

VECTOR FOR SPACING.

VECTOR TO FINAL APPROACH COURSE,

or if the pilot does not have knowledge of the type of approach,

VECTOR TO (approach name) FINAL APPROACH COURSE.

NOTE

c. Issue with the vector an altitude to maintain and all appropriate altitude restrictions when:

1. The vector will take the aircraft off an assigned procedure which contains altitude instructions, i.e., instrument approach, nonradar SID, FMSP, etc.

c2

Add

d. If appropriate, advise the pilot what to expect when the vector is completed.

PHRASEOLOGY–
EXPECT TO RESUME (Route, SID, STAR, FMSP, etc.).

NOTE–
You must ensure that the pilot is made aware if he/she is expected to resume a previously issued route procedure.

e through **e3**

PHRASEOLOGY–
VECTOR TO (fix or airway).

VECTOR TO INTERCEPT (name of NAVAID) (specified) RADIAL.

VECTOR FOR SPACING.

(if appropriate) EXPECT DIRECT (NAVAID, waypoint, fix)

VECTOR TO FINAL APPROACH COURSE,

or if the pilot does not have knowledge of the type of approach,

VECTOR TO (approach name) FINAL APPROACH COURSE.

No Change

c. When vectoring or approving course deviations, assign an altitude to maintain when:

1. The vector **or approved deviation is** off an assigned procedure which contains altitude instructions, i.e., instrument approach, etc.

No Change

3. The vector or approved deviation is off an assigned procedure that contains published altitude restrictions, i.e., SID, STAR, and a clearance to Climb Via/Descend Via has been issued.

d. When vectoring or approving an aircraft to deviate off of a procedure that includes published altitude restrictions, advise the pilot if you intend on clearing the aircraft to resume the procedure.

PHRASEOLOGY–
FLY HEADING (degrees), MAINTAIN (altitude), *EXPECT TO RESUME (SID, STAR, etc.).* ***DEVIATION (restrictions if necessary) APPROVED, MAINTAIN (altitude) EXPECT TO RESUME (SID, STAR, etc.) AT (NAVAID, fix, waypoint)***

NOTE–
After a Climb Via or Descend Via clearance has been issued, a vector/deviation off of a SID/STAR cancels the altitude restrictions on the procedure. The aircraft's Flight Management System (FMS) may be unable to process crossing altitude restrictions once the aircraft leaves the SID/STAR lateral path. Without an assigned altitude, the aircraft's FMS may revert to leveling off at the altitude set by the pilot, which may be the SID/STAR's published top or bottom altitude.

No Change

PHRASEOLOGY– *(Position with respect to course/fix along route), RESUME OWN NAVIGATION,* *or* *FLY HEADING (degrees). WHEN ABLE, PROCEED DIRECT (name of fix),* *or* *RESUME (name/numberFMSP/SID/transition/STAR/procedure).*	***PHRASEOLOGY–*** *(Position with respect to course/fix along route), RESUME OWN NAVIGATION, FLY HEADING (degrees). WHEN ABLE, PROCEED DIRECT (name of fix), RESUME (SID/STAR/**transition**/procedure).*
REFERENCE– *FAAO JO 7110.65, Chapter 4, Section 1, NAVAID Use Limitations.*	***REFERENCE–*** *FAAO JO 7110.65, Chapter 4, Section 1, NAVAID Use Limitations* ***FAAO JO 7110.65,Paragraph 4-5-7, Altitude Information***
f. Aircraft instructed to resume a procedure which contains restrictions (SID/STAR/FMSP, etc.) must be issued/reissued all applicable restrictions or must be advised to comply with those restrictions.	**f.** Aircraft instructed to resume a procedure which contains restrictions (SID/STAR, etc.) must be issued/reissued all applicable restrictions or must be advised to comply with those restrictions.
PHRASEOLOGY– *RESUME (name/numberFMSP/SID/transition/STAR), COMPLY WITH RESTRICTIONS.*	***PHRASEOLOGY–*** *RESUME (name/SID/transition/STAR), COMPLY WITH RESTRICTIONS.* ***PROCEED DIRECT (NAVAID, fix, waypoint) CROSS (NAVAID, fix, waypoint) AT/AT OR ABOVE/AT OR BELOW (altitude) CLIMB VIA/DESCEND VIA (SID/STAR)***
EXAMPLE– *"Resume the Mudde One Arrival, comply with restrictions."* *"Cleared direct Luxor, resume the Ksino One arrival, comply with restrictions."*	***EXAMPLE –*** *"Resume the Mudde One Arrival, comply with restrictions."* *"Cleared direct Luxor, resume the Ksino One arrival, comply with restrictions."* ***"Cleared direct HITME, cross HITME at or above one one thousand, climb via the Boach Five departure."***
Add	**g. Aircraft may not be vectored off an Obstacle Departure Procedure (ODP), or issued an altitude lower than published altitude on an ODP, until at or above the MVA/MIA, at which time the ODP is cancelled.**
Add	***NOTE–*** ***Once an aircraft has been vectored off an Obstacle Departure Procedure, the procedure is cancelled and ATC cannot clear the aircraft to resume the ODP.***
Add	***REFERENCE–*** ***P/CG, Obstacle Departure Procedure***
g	**Re–Letter** to **h**
i	**Re–Letter** to **j**

1. PARAGRAPH NUMBER AND TITLE: 5-9-10. SIMULTANEOUS INDEPENDENT APPROACHES TO WIDELY-SPACED PARALLEL RUNWAYS WITHOUT FINAL MONITORS

2. BACKGROUND: The Flight Technologies and Procedures Division, AFS-400, removed the requirement to provide 1,000 feet vertical or 3 miles radar separation during turn on to widely spaced parallel finals and substituted procedural design to allow simultaneous independent parallel operations between RNAV (RNP) approaches with RF legs and a RNAV (RNP) approaches with RF legs and certain other straight–in approaches.

3. CHANGE:

OLD	NEW
5-9-10. SIMULTANEOUS INDEPENDENT APPROACHES TO WIDELY-SPACED PARALLEL RUNWAYS WITHOUT FINAL MONITORS	**5-9-10. SIMULTANEOUS INDEPENDENT APPROACHES TO WIDELY-SPACED PARALLEL RUNWAYS WITHOUT FINAL MONITORS**
Title through **a**	No Change
1. Provide a minimum of 1,000 feet vertical or a minimum of 3 miles radar separation between aircraft during turn-on to parallel final approach.	**1.** Provide a minimum of 1,000 feet vertical or a minimum of 3 miles radar separation between aircraft**:**
Add	**(a) during turn-on to parallel final approach, or**
Add	**(b) conducting an RNAV (RNP) approach that contains a Radius-to-Fix (RF) leg and an aircraft conducting a straight-in ILS/RNAV with vertical guidance/GLS or another RNAV (RNP) approach with an RF leg until both aircraft are established on their respective approach procedures. Ensure dual RNAV (RNP) approaches that contain RF legs are limited to aircraft approaching from opposite downwinds or base legs and all approach pairings must be conducted so that the approach courses do not overlap.**
Add	***REFERENCE–*** ***FAAO JO 7210.3, Paragraph 10-4-7, Simultaneous Widely-Spaced Parallel Operations***

1. PARAGRAPH NUMBER AND TITLE: 7-2-1. VISUAL SEPARATION

2. BACKGROUND: Improper application of tower-applied and pilot-applied visual separation has been identified by the Air Traffic Organization (ATO) Safety Roundtable as an ATO Top 5 Issue for 2015. The Top 5 is a quantifiable list of hazards that contribute to the highest risk in the National Airspace System.

3. CHANGE:

OLD	NEW
7-2-1. VISUAL SEPARATION	**7-2-1. VISUAL SEPARATION**
Aircraft may be separated by visual means, as provided in this paragraph, when other approved separation is assured before and after the application of visual separation. To ensure that other separation will exist, consider aircraft performance, wake turbulence, closure rate, routes of flight, and known weather conditions. Reported weather conditions must allow the aircraft to remain within sight until other separation exists. Do not apply visual separation between successive departures when departure routes and/or aircraft performance preclude maintaining	**Visual separation may be applied** when other approved separation is assured before and after the application of visual separation. To ensure that other separation will exist, consider aircraft performance, wake turbulence, closure rate, routes of flight, known weather conditions, **and aircraft position**. Weather conditions must allow the aircraft to remain within sight until other separation exists.
REFERENCE	No Change
a1	No Change
(a) Maintain communication with at least one of the aircraft involved or ensure there is an ability to communicate immediately as prescribed in paragraph 3-9-3, Departure Control Instructions, subparagraph a2.	**(a)** Maintain communication with at least one of the aircraft involved or ensure there is an ability to communicate immediately **with applicable military aircraft** as prescribed in **P**aragraph 3-9-3, Departure Control Instructions, subparagraph a2.
(b) The tower visually observes the aircraft, issues timely traffic advisories, and maintains visual separation between the aircraft. The use of tower-applied visual separation is not authorized when wake turbulence separation is required.	**(b)** The tower visually observes the aircraft, issues timely traffic advisories, and **provides** visual separation between the aircraft.
(c) Issue subsequent control instructions as necessary to ensure continued separation between the applicable aircraft.	**(c)** Issue control instructions as necessary to ensure continued separation between the applicable aircraft.
Add	**(d) Do not apply visual separation between successive departures when departure routes and/or aircraft performance preclude maintaining separation.**
Add	**(e) The use of tower-applied visual separation is not authorized when wake turbulence separation is required.**
NOTE– *Adjacent airports with operating ATCTs are not authorized to apply visual separation between their traffic and the other ATCT's traffic.*	**(f)** Adjacent airports with operating ATCTs are not authorized to apply visual separation between their traffic and the other ATCT's traffic.
a2(a) and **a2(b)**	No Change

(1) Tell the pilot about the other aircraft. Include position, direction, and, unless it is obvious, the other aircraft's intention.

a2(b)(2) and **a2(b)(3)**

PHRASEOLOGY–
TRAFFIC, (clock position and distance), (direction) BOUND, (type of aircraft), (intentions and other relevant information).

DO YOU HAVE IT IN SIGHT?

If the answer is in the affirmative,

MAINTAIN VISUAL SEPARATION.

Add

(c) If the pilot advises he/she has the traffic in sight and will maintain visual separation from it (the pilot must use that entire phrase), the controller need only "approve" the operation instead of restating the instructions.

PHRASEOLOGY–
APPROVED.

NOTE–
Pilot-applied visual separation between aircraft is achieved when the controller has instructed the pilot to maintain visual separation and the pilot acknowledges or when the controller has approved pilot-initiated visual separation.

REFERENCE–
FAAO JO 7110.65, Para 5-4-5, Transferring Controller Handoff

(d) If the aircraft are on converging courses, inform the other aircraft of the traffic and that visual separation is being applied.

PHRASEOLOGY–
TRAFFIC, (clock position and distance), (direction) BOUND, (type of aircraft), HAS YOU IN SIGHT AND WILL MAINTAIN VISUAL SEPARATION.

(e) Advise the pilots if the radar targets appear likely to merge.

NOTE

EXAMPLE–
"Radar targets appear likely to merge."

b. TERMINAL. Control of aircraft maintaining visual separation may be transferred to an adjacent position/sector/facility. Coordination procedures must be specified in an LOA or facility directive.

(1) Tell the pilot about the other aircraft. Include position, direction, **type** and, unless it is obvious, the other aircraft's intention.

No Change

PHRASEOLOGY–
(ACID), *TRAFFIC, (clock position and distance), (direction) BOUND, (type of aircraft), (intentions and other relevant information).*

If required,
(ACID), REPORT TRAFFIC IN SIGHT or *DO YOU HAVE IT IN SIGHT?*

If the pilot reports traffic in sight, or *the answer is in the affirmative,*

(ACID), *MAINTAIN VISUAL SEPARATION*

NOTE–
Towers must use the procedures contained in Paragraph 3-1-6, Traffic Information, Subparagraph b or c, as appropriate.

(c) If the pilot **reports** the traffic in sight and will maintain visual separation from it (the pilot must **state both**), the controller may "approve" the operation instead of restating the instructions.

PHRASEOLOGY–
(ACID), *APPROVED.*

NOTE–
Pilot-applied visual separation between aircraft is achieved when the controller has instructed the pilot to maintain visual separation and the pilot acknowledges ***with their call sign*** *or when the controller has approved pilot-initiated visual separation.*

No Change

(d) If aircraft are on converging courses, inform the other aircraft of the traffic and that visual separation is being applied.

PHRASEOLOGY–
(ACID), *TRAFFIC, (clock position and distance), (direction) BOUND, (type of aircraft), HAS YOU IN SIGHT AND WILL MAINTAIN VISUAL SEPARATION.*

(e) Advise the pilots if the targets appear likely to merge.

No Change

EXAMPLE–
"Targets appear likely to merge."

(f) Control of aircraft maintaining visual separation may be transferred to an adjacent position/sector/facility. Coordination procedures must be specified in an LOA or facility directive.

REFERENCE	No Change
c. EN ROUTE. Visual separation may be used up to but not including FL 180 when the following conditions are met:	**b.** EN ROUTE. Visual separation may be used up to but not including FL 180 when the following conditions are met:
1. Direct communication is maintained with one of the aircraft involved and there is an ability to communicate with the other.	No Change
2. A pilot sees another aircraft and is instructed to maintain visual separation from it as follows:	No Change
(a) Tell the pilot about the other aircraft including position, direction and unless it is obvious, the other aircraft's intentions.	**(a)** Tell the pilot about the other aircraft including position, direction**, and type. If** it is **not** obvious, **include** the other aircraft's intentions.
Add	***REFERENCE–*** ***FAAO JO 7110.65, Para 2–1–21, Traffic Advisories.***
(b) Obtain acknowledgment from the pilot that the other aircraft is in sight.	No Change
(c) Instruct the pilot to maintain visual separation from that aircraft.	No Change
Add	***PHRASEOLOGY–*** ***(ACID), TRAFFIC, (clock position and distance), (direction) BOUND, (type of aircraft), (intentions and other relevant information). If required, (ACID), REPORT TRAFFIC IN SIGHT or DO YOU HAVE IT IN SIGHT? If the pilot reports traffic in sight, or the answer is in the affirmative, (ACID), MAINTAIN VISUAL SEPARATION***
Add	**(d) If the pilot reports the traffic in sight and will maintain visual separation (the pilot must state both), the controller may "approve" the operation instead of restating the instructions.**
Add	***PHRASEOLOGY–*** ***(ACID), APPROVED.***
Add	***NOTE–*** ***Pilot-applied visual separation between aircraft is achieved when the controller has instructed the pilot to maintain visual separation and the pilot acknowledges with their call sign or when the controller has approved pilot-initiated visual separation.***
(d) Advise the pilot if the radar targets appear likely to converge.	**(e)** Advise the pilot if the targets appear likely to converge.
(e) If the aircraft are on converging courses, inform the other aircraft of the traffic and that visual separation is being applied.	**(f)** If aircraft are on converging courses, inform the other aircraft of the traffic and that visual separation is being applied.
Add	***PHRASEOLOGY–*** ***(ACID) TRAFFIC, (clock position and distance), (direction)–BOUND, (type of aircraft), ON CONVERGING COURSE, HAS YOU IN SIGHT AND WILL MAINTAIN VISUAL SEPARATION.***
Add	***REFERENCE–*** ***FAAO JO 7110.65, Para 7–4–1, Visual Approach.*** ***FAAO JO 7110.65, Para 7–4–2, Vectors for Visual Approach.***

(f) Advise the pilots if either aircraft is a heavy.

(g) Traffic advisories and wake turbulence cautionary advisories must be issued in accordance with para 2−1−20, Wake Turbulence Cautionary Advisories, and para 2−1−21, Traffic Advisories.

(h) If the pilot advises he/she has the traffic in sight and will maintain visual separation from it (the pilot must use that entire phrase), the controller need only "approve" the operation instead of restating the instructions.

PHRASEOLOGY−

TRAFFIC, (clock position and distance), (direction)−BOUND, (type of aircraft), (intentions and other relevant information).

If applicable,

ON CONVERGING COURSE.

DO YOU HAVE IT IN SIGHT?

If the answer is in the affirmative,

MAINTAIN VISUAL SEPARATION.

If the pilot advises he/she has the traffic in sight and will maintain visual separation from it (pilot must use that entire phrase):

(Call Sign) APPROVED.

If aircraft are on converging courses, advise the other aircraft:

TRAFFIC, (clock position and distance), (direction)−BOUND, (type of aircraft), HAS YOU IN SIGHT AND WILL MAINTAIN VISUAL SEPARATION.

REFERENCE−

FAAO JO 7110.65, Para 7−4−1, Visual Approach.
FAAO JO 7110.65, Para 7−4−2, Vectors for Visual Approach.

d. Nonapproach control towers may be authorized to provide visual separation between aircraft within surface areas or designated areas provided other separation is assured before and after the application of visual separation. This may be applied by the nonapproach control tower providing the separation or by a pilot visually observing another aircraft and being instructed to maintain visual separation with that aircraft.

(g) Advise the pilots if either aircraft is a heavy.

(h) **Issue** wake turbulence cautionary advisories in accordance with para 2−1−20.

Delete

Delete

Delete

c. Nonapproach control towers may be authorized to provide visual separation between aircraft within surface areas or designated areas when approved separation is provided before and after the application of visual separation. **T**he nonapproach control tower **must apply the procedures contained in subparagraph a1 or a2, when applying visual separation.**

PHRASEOLOGY– *VISUAL SEPARATION APPROVED BETWEEN (identification) AND (identification),* *and for departing aircraft,* *(departing/succeeding aircraft) RELEASED YOUR DISCRETION.*	***PHRASEOLOGY–*** *VISUAL SEPARATION APPROVED BETWEEN **(ACID)** AND **(ACID),*** *and for departing aircraft,* *(departing/succeeding aircraft) **(ACID),** RELEASED.*
Add	**d. If the nonapproach control tower controller states to the radar controller that they will provide visual separation between arrivals, departures/arrivals and/or successive departures, and states the call signs of all aircraft involved, the radar controller can approve the application of visual separation as requested.**
Add	***PHRASEOLOGY–*** ***VISUAL SEPARATION APPROVED and for departing/succeeding aircraft, (ACIDs) RELEASED***
NOTE– *Separation of IFR aircraft before and after application of visual separation is an IFR control function (Approach/Departure/En Route). A nonapproach control tower by accepting authorization for visual separation becomes responsible for ensuring that separation. Separation requirements also apply to VFR aircraft when IFR, Class B, Class C or TRSA separation is prescribed.*	***NOTE–*** ***A nonapproach control tower by accepting authorization for visual separation becomes responsible for ensuring that separation.*** *Separation of IFR aircraft before and after application of visual separation is an IFR control function* ***that must be applied by the Approach/Departure/En Route facility****. Separation requirements also apply to VFR aircraft when IFR, Class B, Class C or TRSA separation* ***services are required.***
REFERENCE	No Change

---

1. PARAGRAPH NUMBER AND TITLE: 7-4-4. APPROACHES TO MULTIPLE RUNWAYS

2. BACKGROUND: Current procedures in FAA Order JO 7110.65, Paragraphs 7-4-4 c2 and c3 restrict controllers to use of radar vectors to achieve the required maximum 30-degree intercept to the final approach course. Advanced NextGen procedures provide a greater degree of course accuracy. However, current guidance does not permit their use with conventional and visual approach procedures while conducting approaches to multiple runways.

3. CHANGE:

OLD	**NEW**
7-4-4. APPROACHES TO MULTIPLE RUNWAYS	**7-4-4. APPROACHES TO MULTIPLE RUNWAYS**
Title through **c2**	No Change
(a) Approved separation is provided until the aircraft are established on a heading which will intercept the extended centerline of the runway at an angle not greater than 30 degrees, and each aircraft has been issued and one pilot has acknowledged receipt of the visual approach clearance, and the other pilot has acknowledged receipt of the visual or instrument approach clearance.	**(a)** Approved separation is provided until the aircraft are**:**

Add	**(1) Established on a heading or established on a direct course to a fix or cleared on an RNAV/ instrument approach procedure which will intercept the extended centerline of the runway at an angle not greater than 30 degrees, and,**
Add	**(2) Issued an approach clearance and one pilot has acknowledged receipt of a visual approach clearance, and,**
Add	**(3) The other pilot has acknowledged receipt of a visual or instrument approach clearance.**
***NOTE* 1** and **2**	No Change
Add	***NOTE–*** ***3. Procedures using Radius-to-Fix legs that intercept final may be used in lieu of 30-degree intercept provisions contained in this paragraph.***
REFERENCE– *FAA Publication, Pilot's Handbook of Aeronautical Knowledge, Chapter 15 "Effect of Wind."*	No Change
c2(b) through **c3(c)**	No Change
(d) Each aircraft must be assigned headings which will allow the aircraft to intercept the extended centerline of the runway at an angle not greater than 30 degrees.	**(d)** Each aircraft must **either** be assigned a **heading or established on a direct course to a fix or cleared on an RNAV/instrument approach procedure** which will allow the aircraft to intercept the extended centerline of the runway at an angle not greater than 30 degrees.
***NOTE* 1** and **2**	No Change
Add	***NOTE–*** ***3. Procedures using Radius-to-Fix legs that intercept final may be used in lieu of 30-degree intercept provisions contained in this paragraph.***
REFERENCE– *FAA Publication, Pilot's Handbook of Aeronautical Knowledge, Chapter 15 "Effect of Wind."*	No Change
c4	No Change

---

1. PARAGRAPH NUMBER AND TITLE:
8-7-3. LONGITUDINAL SEPARATION
8-8-3. LONGITUDINAL SEPARATION
8-9-3. LONGITUDINAL SEPARATION
8-10-3. LONGITUDINAL SEPARATION

2. BACKGROUND: ADS-B In Trail Procedure (ITP) is an additional capability fully compatible with the existing Advanced Technologies and Ocean Procedures (ATOP) oceanic automation system. The ADS-B ITP is a pilot-requested procedure that utilizes existing ADS-B aircraft equipage and air traffic control capabilities to allow more flights to achieve their preferred vertical profiles, and thereby increases both capacity and efficiency in the oceanic domain. The ADS-B ITP was designed to improve service to appropriately equipped aircraft by allowing pilots to request an altitude change when the existing separation minima do not allow aircraft to climb or descend through the altitude of a blocking aircraft.

3. CHANGE:

OLD	NEW
8-7-3. LONGITUDINAL SEPARATION	**8-7-3. LONGITUDINAL SEPARATION**
Title through **c2**	No Change
Add	**d. Clear an aircraft for an ADS-B In Trail Procedure (ITP) climb or descent provided the following conditions are satisfied:**
Add	**1. The ITP climb or descent has been requested by the pilot;**
Add	**2. The aircraft identification of each reference aircraft in the ITP request exactly matches the Item 7 - aircraft identification of the corresponding aircraft's filed flight plan;**
Add	**3. The reported ITP distance between the ITP aircraft and any reference aircraft is 15 NM or more;**
Add	**4. Both the ITP aircraft and reference aircraft are either on:**
Add	**(a) same identical tracks and any turn at a waypoint shall be limited to less than 45 degrees; or**
Add	**(b) same tracks with no turns permitted that degrade required separation during the ITP.**
Add	***NOTE–*** ***Same identical tracks are where the angular difference is zero degrees.***
Add	**5. No speed or route change clearance shall be issued to the ITP aircraft until the ITP climb or descent is completed;**
Add	**6. The altitude difference between the ITP aircraft and any reference aircraft shall be 2000 ft or less;**
Add	**7. No instruction to amend speed, altitude or route shall be issued to any reference aircraft until the ITP climb or descent is completed;**
Add	**8. The maximum closing speed between the ITP aircraft and each reference aircraft shall be Mach 0.06; and**
Add	**9. The ITP aircraft shall not be a reference aircraft in another ITP clearance.**
Add	***NOTE–*** ***ATOP is designed to check for the above criteria prior to allowing the minima to be provided.***
d	Re–Letter **e**

OLD	NEW
8-8-3. LONGITUDINAL SEPARATION	**8-8-3. LONGITUDINAL SEPARATION**
Title through **d3**	No Change

Add	**e. Clear an aircraft for an ADS-B In Trail Procedure (ITP) climb or descent provided the following conditions are satisfied:**
Add	**1. The ITP climb or descent has been requested by the pilot;**
Add	**2. The aircraft identification of each reference aircraft in the ITP request exactly matches the Item 7 - aircraft identification of the corresponding aircraft's filed flight plan;**
Add	**3. The reported ITP distance between the ITP aircraft and any reference aircraft is 15 NM or more;**
Add	**4. Both the ITP aircraft and reference aircraft are either on:**
Add	**(a) same identical tracks and any turn at a waypoint shall be limited to less than 45 degrees; or**
Add	**(b) same tracks with no turns permitted that degrade required separation during the ITP.**
Add	***NOTE–*** ***Same identical tracks are where the angular difference is zero degrees.***
Add	**5. No speed or route change clearance shall be issued to the ITP aircraft until the ITP climb or descent is completed;**
Add	**6. The altitude difference between the ITP aircraft and any reference aircraft shall be 2000 ft or less;**
Add	**7. No instruction to amend speed, altitude or route shall be issued to any reference aircraft until the ITP climb or descent is completed;**
Add	**8. The maximum closing speed between the ITP aircraft and each reference aircraft shall be Mach 0.06; and**
Add	**9. The ITP aircraft shall not be a reference aircraft in another ITP clearance.**
Add	***NOTE–*** ***ATOP is designed to check for the above criteria prior to allowing the minima to be provided.***
e	Renumber **f**

OLD	**NEW**
8-9-3. LONGITUDINAL SEPARATION	**8-9-3. LONGITUDINAL SEPARATION**
Title through **a4**	No Change
Add	**b. Clear an aircraft for an ADS-B In Trail Procedure (ITP) climb or descent provided the following conditions are satisfied:**

Add	**1. The ITP climb or descent has been requested by the pilot;**
Add	**2. The aircraft identification of each reference aircraft in the ITP request exactly matches the Item 7 - aircraft identification of the corresponding aircraft's filed flight plan;**
Add	**3. The reported ITP distance between the ITP aircraft and any reference aircraft is 15 NM or more;**
Add	**4. Both the ITP aircraft and reference aircraft are either on:**
Add	**(a) Same identical tracks and any turn at a waypoint shall be limited to less than 45 degrees; or**
Add	**(b) same tracks with no turns permitted that degrade required separation during the ITP.**
Add	***NOTE–*** ***Same identical tracks are where the angular difference is zero degrees.***
Add	**5. No speed or route change clearance shall be issued to the ITP aircraft until the ITP climb or descent is completed;**
Add	**6. The altitude difference between the ITP aircraft and any reference aircraft shall be 2000 ft or less;**
Add	**7. No instruction to amend speed, altitude or route shall be issued to any reference aircraft until the ITP climb or descent is completed;**
Add	**8. The maximum closing speed between the ITP aircraft and each reference aircraft shall be Mach 0.06; and**
Add	**9. The ITP aircraft shall not be a reference aircraft in another ITP clearance.**
Add	***NOTE–*** ***ATOP is designed to check for the above criteria prior to allowing the minima to be provided.***
b	Re–Letter **c**

OLD	**NEW**
8-10-3. LONGITUDINAL SEPARATION	**8-10-3. LONGITUDINAL SEPARATION**
Title through **a3**	No Change
Add	**b. Clear an aircraft for an ADS-B In Trail Procedure (ITP) climb or descent provided the following conditions are satisfied:**
Add	**1. The ITP climb or descent has been requested by the pilot;**

Add	**2. The aircraft identification of each reference aircraft in the ITP request exactly matches the Item 7 - aircraft identification of the corresponding aircraft's filed flight plan;**
Add	**3. The reported ITP distance between the ITP aircraft and any reference aircraft is 15 NM or more;**
Add	**4. Both the ITP aircraft and reference aircraft are either on:**
Add	**(a) same identical tracks and any turn at a waypoint shall be limited to less than 45 degrees; or**
Add	**(b) same tracks with no turns permitted that degrade required separation during the ITP.**
Add	***NOTE–*** ***Same identical tracks are where the angular difference is zero degrees.***
Add	**5. No speed or route change clearance shall be issued to the ITP aircraft until the ITP climb or descent is completed;**
Add	**6. The altitude difference between the ITP aircraft and any reference aircraft shall be 2000 ft or less;**
Add	**7. No instruction to amend speed, altitude or route shall be issued to any reference aircraft until the ITP climb or descent is completed;**
Add	**8. The maximum closing speed between the ITP aircraft and each reference aircraft shall be Mach 0.06; and**
Add	**9. The ITP aircraft shall not be a reference aircraft in another ITP clearance.**
Add	***NOTE–*** ***ATOP is designed to check for the above criteria prior to allowing the minima to be provided.***
b	Re–Letter **c**

---

1. PARAGRAPH NUMBER AND TITLE: 9-1-2. SPECIAL HANDLING

2. BACKGROUND: A GENOT was issued on May 11, 2015, regarding the call sign addition FLIGHT VAL. Activities associated with FAA authorized non-FAA Service Providers conducting Flight Validation (FV) activities are similar to Flight Check activities. The Flight Procedure Implementation and Oversight Branch (AFS-460) felt that additional information should be added to FAA Order JO 7110.65, para 9-1-2 to increase Air Traffic awareness and understanding of the level of activity required.

3. CHANGE:

OLD	NEW
9-1-2. SPECIAL HANDLING	**9-1-2. SPECIAL HANDLING**

Title through **d**	No Change
NOTE– *FAA flight inspection aircraft will file flight plans using the call sign "FLIGHT CHECK" during flight inspections or when inbound to conduct flight inspections. Flight plan remarks may indicate type NAVAID inspection to be accomplished; e.g. "FC OKC P."*	***NOTE–*** ***1.*** *FAA flight inspection aircraft will file flight plans using the call sign "FLIGHT CHECK" during flight inspections or when inbound to conduct flight inspections. Flight plan remarks may indicate type NAVAID inspection to be accomplished; e.g. "FC OKC P."*
Add	***2. Authorized non-FAA Service Providers conducting Flight Validation activities use the call sign "FLIGHT VAL." Although these activities are similar to Flight Inspection activities, no additional priority is granted with this call sign.***

---

1. PARAGRAPH NUMBER AND TITLE: 10-2-13. MANPADS ALERT

2. BACKGROUND: Changes to reporting responsibilities and obsolete procedures have necessitated updates and clarifications to MANPADS paragraphs in FAA Order JO 7610.4, Special Operations; FAA Order JO 7210.3, Facility Operation and Administration; and FAA Order JO 7110.65, Air Traffic Control. The updates include requiring ATC facilities to report any MANPADS threat received to the the Domestic Events Network (DEN) Air Traffic Security Coordinator (ATSC).

3. CHANGE:

OLD	**NEW**
10-2-13. MANPADS ALERT	**10-2-13. MANPADS ALERT**
Title through **c**	No Change
d. Report MANPADS threat/attack/post–event activity until notified otherwise by FAA national headquarters.	**d.** Report MANPADS threat/attack/post–event activity **via the ATIS and/or controller–to–pilot transmissions** until notified otherwise by **the Domestic Events Network (DEN) Air Traffic Security Coordinator (ATSC).**
REFERENCE– *FAAO JO 7110.65, Para 2–9–3, Content.* *FAAO JO 7210.3, Para 2–1–9, Handling MANPADS Incidents.*	***REFERENCE–*** *FAAO JO 7110.65, Para 2–9–3, Content.* *FAAO JO 7210.3, Para 2–1–9, Handling MANPADS Incidents.* ***FAAO JO 7610.4, Para 16-1-3, Responsibilities.***

---

1. PARAGRAPH NUMBER AND TITLE:
11-1-1. DUTY RESPONSIBILITY
11-1-2. DUTIES AND RESPONSIBILITIES
11-1-3. TIME BASED FLOW MANAGEMENT (TBFM)

2. BACKGROUND: Traffic Management Advisor (TMA) was known as a comprehensive, automated method of planning efficient arrival trajectories from cruise altitude to the runway threshold. It increased situational awareness through its graphical displays, timelines, and load graphs. TMA trajectories have been optimized for each aircraft to permit an accurate estimated time of arrival at an airport and provide scheduled times of arrival (meter times) that optimize the flow of traffic into a terminal area. The next generation of TMA has begun. In this generation, all references to TMA have been changed, now referencing its new name: Time-Based Flow Management (TBFM).

3. CHANGE:

OLD

11–1–1. DUTY RESPONSIBILITY

Title through **a**

Add

Add

b. It is recognized that the ATCS is integral in the execution of the traffic management mission.

NOTE–
Complete details of traffic management initiatives and programs can be found in FAAO JO 7210.3, Facility Operation and Administration.

NEW

11–1–1. DUTY RESPONSIBILITY

No Change

b. TBFM must be used to the maximum extent feasible in preference to miles-in-trail initiatives.

NOTE–
The benefits of TBFM are best realized through the coordinated effort of all facilities supporting Performance Based Navigation procedures or Traffic Management Initiatives (TMIs).

c. It is recognized that the ATCS is integral in the execution of the traffic management mission.

No Change

OLD

11–1–2. DUTIES AND RESPONSIBILITIES

Title through **a**

1. Ensure that an operational briefing is conducted at least once during the day and evening shifts. Participants must include, at a minimum, the STMCIC, Operations Supervisors (OS), Traffic Management Coordinator(s) (TMC), and other interested personnel as designated by facility management. Discussions at the meeting should include meteorological conditions (present and forecasted), staffing, equipment status, runways in use, AAR and traffic management initiatives (present and anticipated).

a2

3. Ensure that traffic management initiatives are carried out by Supervisory Traffic Management Coordinator–in–Charge (STMCIC).

a4 and **a5**

6. Ensure changes to restrictions based on the Restrictions Inventory and Evaluation are implemented in a timely manner.

b. FLM must:

b1

2. Coordinate with the TMU and ATCSs to develop appropriate traffic management initiatives for sectors and airports in their area of responsibility.

NEW

11–1–2. DUTIES AND RESPONSIBILITIES

No Change

1. Ensure an operational briefing is conducted at least once during the day and evening shifts. Participants must include, at a minimum, the STMCIC, **Front Line Manager-in-Charge (FLMIC)/Controller-in-Charge (CIC)** and other interested personnel as designated by facility management. Discussions at the meeting should include meteorological conditions (present and forecasted), staffing, equipment status, runways in use, **Airport Arrival Rate** (AAR)/**Metering Parameters and Traffic Management Initiatives (TMIs)** (present and anticipated).

No Change

3. Ensure that **TMIs** are carried out by **personnel providing traffic management services.**

No Change

6. Ensure changes to restrictions/**metering** are implemented in a timely manner.

b. FLM/**CIC** must:

No Change

2. Coordinate with the TMU and **personnel providing air traffic services** to develop appropriate **TMIs** for sectors and airports in their area of responsibility.

3. Continuously review traffic management initiatives affecting their area of responsibility and coordinate with TMU for extensions, revisions, or cancellations.

4. Ensure that traffic management initiatives are carried out by ATCSs.

b5 and **b6**

7. Ensure changes to restrictions based on the Restrictions Inventory and Evaluation are implemented in a timely manner.

c. ATCSs must:

1. Ensure that traffic management initiatives and programs are enforced within their area of responsibility. Traffic management initiatives and programs do not have priority over maintaining:

c1(a) and **c1(b)**

2. Keep the OS and TMU apprised of situations or circumstances that may cause congestion or delays.

3. Continuously review traffic management initiatives affecting their area of responsibility and coordinate with OS and TMU for extensions, revisions, or cancellations.

c4 through **d**

1. Support TMA operations and monitor TMA equipment to improve situational awareness for a system approach to traffic management initiatives.

d2 through **e**

1. Support TMA operations and monitor TMA equipment to improve situational awareness for a system approach to traffic management initiatives.

e2 through **f**

1. Monitor TMA equipment to improve situational awareness for a system approach to traffic management initiatives.

3. Continuously review **TMIs** affecting their area of responsibility and coordinate with TMU for extensions, revisions, or cancellations.

4. Ensure that TMIs are carried out by personnel providing air traffic services.

No Change

7. Ensure changes to **TMIs** are implemented in a timely manner.

c. Personnel providing air traffic services must:

1. Ensure that **TMIs** are enforced within their area of responsibility. **TMIs** do not have priority over maintaining:

No Change

2. Keep the **FLM/CIC** and TMU apprised of situations or circumstances that may cause congestion or delays.

3. Continuously review **TMIs** affecting their area of responsibility and coordinate with **FLM/CIC** and TMU for extensions, revisions, or cancellations.

No Change

1. Support **TBFM** operations and monitor **TBFM** equipment to improve situational awareness for a system approach to **TMIs.**

No Change

1. Support **TBFM** operations and monitor **TBFM** equipment to improve situational awareness for a system approach to **TMIs.**

No Change

1. Monitor **TBFM** equipment to improve situational awareness for a system approach to **TMIs.**

OLD

11–1–3. TIME BASED FLOW MANAGEMENT (TBFM)

During periods of metering, ATCS must:

a. Display TMA schedule information on the main display monitor (MDM).

b. Comply with TMA-generated metering times within +/- 1 minute.

NEW

11–1–3. TIME BASED FLOW MANAGEMENT (TBFM)

During periods of metering, **personnel providing air traffic services** must:

a. Display **TBFM** schedule information on the main display monitor (MDM).

b. Comply with **TBFM**-generated metering times within +/- 1 minute.

1. If TMA-generated metering time accuracy within +/- 1 minute cannot be used for specific aircraft due to significant jumps in the delay countdown timer (DCT), other traffic management initiatives may be used between those aircraft such as miles-in-trail (MIT) or minutes-in-trail (MINIT) to assist in delay absorption until stability resumes.	**1.** If **TBFM**-generated metering time accuracy within +/- 1 minute cannot be used for specific aircraft due to significant jumps in the delay countdown timer (DCT), other **TMIs** may be used between those aircraft such as miles-in-trail (MIT) or minutes-in-trail (MINIT) to assist in delay absorption until stability resumes.
b2	No Change
c. When compliance is not possible, coordinate with FLM and adjacent facilities/sectors as appropriate.	**c.** When compliance is not possible, coordinate with FLM**/CIC, personnel providing traffic management services,** and adjacent facilities/sectors as appropriate.
NOTE– *TMA accuracy of generated metering times is predicated on several factors, including vectoring outside of TMA route conformance boundaries (route recovery logic), certain trajectory ground speed calculations, and when TMU resequences a specific flight or flight list. Caution should be used in these situations to minimize impact on surrounding sector traffic and complexity levels, flight efficiencies, and user preferences.*	***NOTE–*** ***TBFM*** *accuracy of generated metering times is predicated on several factors, including vectoring outside of* ***TBFM*** *route conformance boundaries (route recovery logic), certain trajectory ground speed calculations, and when TMU resequences a specific flight or flight list. Caution should be used in these situations to minimize impact on surrounding sector traffic and complexity levels, flight efficiencies, and user preferences.*

---

1. PARAGRAPH NUMBER AND TITLE: 13-1-9. ACKNOWLEDGEMENT OF AUTOMATED NOTIFICATION

2. BACKGROUND: In the Host Computer System, computer applied preferential routes (PARs, PDRs, PDARs) were developed to provide Air Traffic Control (ATC) directed preferred and/or mandated routes. The need for a controller to provide a modified clearance to an aircraft was provided by a “red route” or later a “highlighted route” on a flight strip. Only a single sector received this indication and it was expected the controller would issue the clearance or provide some alternative. En Route Decision Support Tool (EDST previously URET) introduced the concept of blue Embedded Route Text (ERT previously HERT) coding as a replacement for the red/highlighted indication on flight strips, and is integrated in En Route Automation Modernization (ERAM). Embedded Route Text (ERT) coding differs from previous method in that the ERT coding will show at every sector in the facility until the coding is acknowledged. However depending on facility settings, flight plans sent to other facilities could show the route merged; i.e., assumes that the ERT route has been issued. To function properly with the ERAM design, the acknowledgement of the ERT coding needs to be done in a timely manner. This is especially true to support terminal ARTS/STARS and FDIO processing.

3. CHANGE:

OLD	**NEW**
13-1-9. ACKNOWLEDGEMENT OF AUTOMATED NOTIFICATION	**13-1-9. ACKNOWLEDGEMENT OF AUTOMATED NOTIFICATION**
Title through **e**	No Change

f. Send/acknowledge Host Embedded Route Text (HERT) coding only after the appropriate clearance has been issued to the pilot or otherwise coordinated. Do not send/acknowledge HERT unless the sector has track control for the flight or it has been otherwise coordinated.	**f. The first sector which displays Embedded Route Text (ERT) coding must issue and send/acknowledge the route prior to initiating a hand-off unless verbally coordinated or as specified in appropriate facility directives.** Do not send/acknowledge **ERT coding** unless the sector has track control for the flight or it has been otherwise coordinated.
g. Remove ATC Preferred Route (APR) coding only after the route has been checked and any required action has been completed. Do not remove APR coding unless the sector has track control or it has been otherwise coordinated.	**g.** Route **Action Notifications (RAN) such as ATC preferred routes or route processing errors must be amended at the first control position that displays the RAN unless verbally coordinated or as specified in appropriate facility directives.** Do not remove **RAN** coding unless the sector has track control or it has been otherwise coordinated.
NOTE– *If coding is prematurely removed and the control of the aircraft is transferred before completing the appropriate action, the next sector may not receive the necessary APR notification.*	Delete

---

1. PARAGRAPH NUMBER AND TITLE:
Appendix A - Aircraft Information Fixed-Wing Aircraft
Appendix B - Aircraft Information Helicopters/Rotorcrafts
Appendix C - Aircraft Information Specific Amateur–Built/Experimental Aircraft

2. BACKGROUND: The International Civil Aviation Organization (ICAO) formulates aircraft type designators for the world's aircraft that will most likely receive air traffic services. ICAO provides this information through ICAO Document 8643, Aircraft Type Designators, which is updated at least annually. FAA supplements the ICAO information and publishes it through two documents: FAA Order JO 7340.2, Contractions, and FAA Order JO 7110.65, Air Traffic Control. These FAA documents didn't contain all the aircraft listed by ICAO and the FAA documents contained dissimilar information.

3. CHANGE:

OLD	NEW
Appendix A - Aircraft Information Fixed-Wing Aircraft	Delete Entire Appendix
OLD	**NEW**
Appendix B - Aircraft Information Helicopters/ Rotorcrafts	Delete Entire Appendix
OLD	**NEW**
Appendix C - Aircraft Information Specific Amateur–Built/Experimental Aircraft	Delete Entire Appendix
OLD	**NEW**
Appendix D – Standard Operating Practice (SOP) for the Transfer of Position Responsibility	**Appendix A – Standard Operating Practice (SOP) for the Transfer of Position Responsibility**