ORDER

FS 4420.1

FLIGHT STANDARDS FIELD OFFICE DESIGN

June 23, 1995

DEPARTMENT OF TRANSPORTATION
FEDERAL AVIATION ADMINISTRATION

Distribution: A-WX(FS)-5; A-W(SM)-2; A-X(CS)-2
A-X(LG)-3; AVR-1 (1 CY); ASM-740 (2 CYS)
A-FFS-0 (SUPV); AIR-1 (1 CY)

Initiated By: AFS-1

RECORD OF CHANGES

DIRECTIVE NO. FS 4420.1

CHANGE TO BASIC	SUPPLEMENTS			OPTIONAL USE	CHANGE TO BASIC	SUPPLEMENTS			OPTIONAL USE

FOREWORD

This order defines a standard for the configuration of Flight Standards field facility workspace. It describes the minimum needs for office space and furnishings and the process for identifying needs requirements and requesting office space. The responsibilities of agency elements and AFS management are outlined.

This order provides a base to ensure fair and equitable modernization and standardization of office space and furnishings for all AFS field facilities. This order supersedes any and all other standards related to office space and furnishings for Flight Standards field offices.

This order has been fully coordinated with the Systems Maintenance Service, regional Logistics Divisions, regional Real Estate and Utilities Branches and Real Property Branches. It has also been coordinated with all Flight Standards managers in the Washington Headquarters, the regions, and Flight Standards field offices and facilities.

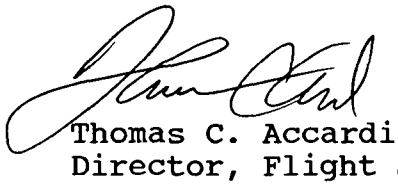

Thomas C. Accardi
Director, Flight Standards Service

TABLE OF CONTENTS

Paragraph		Page
Chapter 1.	**Flight Standards Field Office Design**	**1**
1.	Purpose	1
2.	Distribution	1
3.	Background	1
4.	Related Publications	1
5.	Responsibilities	2
6.	General Information Regarding the Program	3
7.	Directive Feedback Information	4
8.-10.	Reserved.	4
Chapter 2.	**Location**	**5**
11.	Physical Location	5
12.	Impact and Coordination Requirements	5
13.	Collocation of Field Facility with Regional Office	6
14.-15.	Reserved	
Chapter 3.	**Facility Standards**	**7**
16.	Building Requirements - General	7
17.	Administrative Space - Private	7
18.	Administrative Space - General Consideration	7
19.	Administrative Space - Special Type Space	9
20.	Reserved	11
Chapter 4.	**Equipment and Furnishings**	**15**
Section 1.	Office Equipment	
21.	Equipment	15
22.	Files	15
23.	Copier	15
24.	Microfiche Reader/Printer	15
25.	Telefax/Facsimile Equipment	15
26.	Shredder	15
27.	Bottled Water	15
Section 2.	Systems Furnishings	
28.	Flight Standards Position	15
29.	Approval Process/Coordination	16
Section 3.	Reception Furnishings	
30.	Reception Areas	17
31.-35.	Reserved	17
Chapter 5.	**Procedures and Coordination Process**	**19**
36.	Originating Office Procedures	19
37.	Coordination	19

Table of Contents - continued

Paragraph		Page
38.	Regional Flight Standards Division	20
39.	Union	20
40.	Planning and Resource Management Committee (PRC)	20
41.	Airway Facilities Division	20
42.	Security Division	20
43.	Airport Authority/Manager	21
44.	Landlord	21
45.	Logistics Division	21
46.	Vendors, Contractors	22
47.-50.	Reserved	22
Chapter 6.	**Solicitation for Offers**	25
51.	Solicitation Package	25
52.	Defining the Requirement	25
53.	Funding	25
54.-60.	Reserved	25

Appendix 1. Space Requirements Worksheet (2 pages)

Appendix 2. Sample Request for Office Space (2 pages)

Appendix 3. Sample Lease - Solicitation for Offers (36 pages)

Appendix 4. Project Management Information, Sample Work Station Prototypicals and Floor Plans for Office Layout - Systems Furniture Installation (9 pages)

Appendix 5. Suggested Guidelines for Maintaining the Appearance of the New Workspace (2 pages)

CHAPTER 1. FLIGHT STANDARDS FIELD OFFICE DESIGN

1. PURPOSE. This order identifies standard office space, equipment, and furnishings design requirements for all Flight Standards Service (AFS) field offices and facilities; i.e., Flight Standards District Offices, International Field Offices, Certificate Management Offices, and all other associated field offices.

2. DISTRIBUTION. This order is distributed to all managers in the Flight Standards Service headquarters, region, and field organizations; to the Associate Administrator for Regulation and Certification and the Aircraft Certification Service; to the Real Property Branch in the Systems Maintenance Service; and to all regional Civil Aviation Security Divisions and to branch level in regional Logistics Divisions.

3. BACKGROUND. To fulfill the agency's objectives and mission, our employees must maintain a professional image and attitude. Our work activities frequently include visits from representatives of foreign governments, various industry/people groups, and members of the general public.

a. The workspace requirements described herein are designed to provide our employees with a modern, efficient, comfortable and pleasant work environment, conducive to productivity and employee harmony. These guidelines standardize the presentation of our field office workspace and promote positive attitudes about our job functions.

b. All future AFS field office relocations, establishment, and modernization will be premised on the guidelines contained in this document. This is, for all intents and purposes, a modernization activity that goes beyond the scope of purchasing new furnishings. These guidelines anticipate the needs of the future AFS field office from the ground up: location, space, utilities, equipment, furnishings, design, etc.

4. RELATED PUBLICATIONS. The following orders are referenced for convenience:

a. Agency Order 1100.1 (as amended), FAA Organization - Policies and Standards.

b. Agency Order 1100.2 (as amended), Organization - FAA Headquarters.

c. Agency Order 1100.5 (as amended), FAA Organization - Field.

d. Agency Order 1600.46, Physical Security Review of New Facilities, Office Space, or Operating Areas.

e. Agency Order 4420.4, Space Acquisition.

5. RESPONSIBILITIES. The following responsibilities are identified:

a. Flight Standards Service. It is the responsibility of our Flight Standards Service management to ensure that AFS employees are provided guidance for the conduct of their work activities, and to ensure standardization and consistency in the application of our regulations and procedures to the aviation community. It is also the responsibility of our management, within allocated resources, to provide for quality facilities, equipment, information, and the tools to do the job.

b. Flight Standards Field Office Manager. At the discretion of the regional Real Estate and Utilities Branch, the field office manager may be appointed Contracting Officer Technical Representative (COTR). COTR functions involve lease administration; e.g., monitoring lessor's performance of cleaning, HVAC services, etc. Where the field office manager is not designated COTR, the manager is still responsible to report deficiencies and nonperformance isues to the regional Real Estate and Utilities Branch, in writing. Such documentation is needed to formally seek resolution through withholding rent, etc.

c. Systems Maintenance Service. The Systems Maintenance Service, NAS Support Division, ASM-700, is responsible for providing national policy and guidance with respect to real property and space management.

d. The Regional Logistics Division. The regional Logistics Division is responsible for the actual acquisition of real property, space, and utility services within the region. Flight Standards management works closely with the regional Real Estate and Utilities Branch to achieve all aspects of the guidelines set forth in this document.

e. Regional Airway Facilities Division. This organization is responsible for telecommunications; therefore, they will be responsible for the phone system.

f. The Plans and Resource Management Committees (PRC). The regional and national Flight Standards (AFS) PRC's, which consist of AFS division, branch, and field office managers, will review all requests for modernization of any AFS field facility and recommend priorities on a regional and national basis according to the committee's purview. Determinations will be based on fiscal resources and need.

g. Each AFS Employee. It is the responsibility of each employee to positively contribute to the order and appearance of their workplace.

6. GENERAL INFORMATION REGARDING THE PROGRAM. Along with achieving a new office environment, there are other considerations that need to be addressed in a Project Plan that includes the following information:

a. Consider the future of the organization and what may be required in 5 years.

b. All future purchases of equipment should be assessed as to compatibility with the furnishings, the electrical capacity, and other future considerations.

c. Prior to obligation of funds, all designs and floor plans must be approved by the regional Flight Standards Division manager.

d. Systems furniture, space saving files, ergonomic seating, lighting, conference rooms, and special space are a major part of such a project. Identify the total building requirements, define the prototypicals, establish the technical requirements, special build-out requirements and other costs.

e. Important to successful implementation is employee awareness.

f. Work must continue during any remodeling or moving effort. Conference rooms and other special need areas must be available to support work activity. It may be necessary to schedule meetings and project activities outside of the office for the duration of the transition to the new space. Notify customers of movement activity that requires telephone change or relocation of the office.

g. There is a requirement for submission and approval of a Systems Furniture Project Plan if the estimated cost exceeds $200,000 and the requirement for approval of the acquisition of systems furniture by either the Regional Administrator (if under $50,000), ASU-1 (between $200,000 and $500,000) or Executive Director, AXA-1 (if over $500,000). See Orders 1100.2C and 1100.5C.

7. DIRECTIVE FEEDBACK INFORMATION. If there is any portion of this order that requires clarification, or a deficiency is found, or you have a suggestion regarding its content, please forward this information to the Directives Management Officer, AFS-13. FAA Form 1320-19, Directive Feedback Information, is included at the end of this order for your convenience.

8.-10. RESERVED.

CHAPTER 2. LOCATION

11. PHYSICAL LOCATION. The Flight Standards Service desires that Flight Standards District Offices be located so as to provide service to all customers.

a. Each office will be situated so it is highly visible and readily accessible to the local community and the entire aviation industry. To most successfully carry out our safety mandate, our presence, side-by-side with our aviation customers, is essential.

b. Every effort should be made to locate Flight Standards field offices on or adjacent to an airport. However, FAA leasing procedures must comply with the Competition in Contracting Act (CICA). The Solicitation for Offers (SFO) of leased space should include an award factor for proximity to the airport, except in Alaska where the field office may have to be located on the airport due to the unique nature of air transportation in that region. A reasonable area of competition must be established from which to solicit potential offers of space.

c. Some existing field offices are located in space leased and controlled by the General Services Administration, while other offices occupy FAA-controlled leased space. The Omnibus Budget Reconciliation Act of 1990, as implemented by FAA Order 4420.5, Leasing Authority for Real Property (Space), expanded FAA's leasing authority to 25,000 square feet of total space within a 5-mile radius of an airport, except in geographic areas where airports are located in close proximity to central business districts of major metropolitan areas. Only GSA has authority to lease general purpose administrative space in central business districts in the standard Metropolitan Statistical Areas as defined by the Department of Commerce.

12. IMPACT AND COORDINATION REQUIREMENTS. Flight Standards Division and office managers must consider the impact on employees when relocating an office. Regional accounting and logistic divisions must be consulted when making the following decisions.

a. Permanent change of station (PCS) costs may be incurred and must be considered when moving the office more than 10 miles from the employee's present commuting distance (reference Order 1500.14A, Travel Manual, for instructions). Consult with the local accounting office for details regarding distances and with the local human resource organization regarding employee rights. Also consider travel and per diem costs for work performance. (These considerations are mentioned to alert AFS personnel to mileage ramifications when considering off-airport relocations.)

b. There are FAA leasing requirements to consider if the office is located more than 5 miles from an airport or in the central business area. Flight Standards managers and the logistics organization must work closely together to achieve a successful negotiation of a lease that can place a Flight Standards office in a strategic location in the aviation community. Input from the Flight Standards manager before the lease negotiations begin would be invaluable, however, the regional real estate contracting officer is the **ONLY** authorized person to negotiate the space lease. In most instances, the AFS manager is not skilled in the space leasing process and could innocently divulge information to a potential lessor that might be detrimental to successful negotiations. Therefore, AFS participation in the market survey should be accommodated under the following conditions.

(1) The number of individuals participating should be limited to one: the AFS manager (or designee) **ONLY**. Attendance by the entire office staff or a large number of office staff negatively impacts negotiations with potential lessors.

(2) The AFS manager (or designee) should limit verbal comments to prospective lessors during the course of the market survey to avoid adversely impacting the lease negotiations and the FAA's bargaining position. Questions and/or input should be held for private FAA conversations.

13. COLLOCATION OF FIELD FACILITY WITH REGIONAL OFFICE. When the field office is collocated with the regional office, space standards prescribed for the regional office must prevail.

14.-15. RESERVED.

CHAPTER 3. FACILITY STANDARDS

16. BUILDING REQUIREMENTS - GENERAL. The facility must conform to Federal and local standards for fire safety, occupational safety, health, and environmental safety and security, and be handicapped accessible. It must be convenient for the aviation community.

a. The facility must contain sufficient space to adequately meet the administrative space requirements of the Flight Standards field office.

b. The space standards for private offices, work stations, and special areas presented in Appendix 1, together with any specially developed requirements, shall be used to estimate the total amount of space needed when designing, planning, or modifying a building for Flight Standards occupancy.

17. ADMINISTRATIVE SPACE - PRIVATE. All Flight Standards field offices will provide private office space (floor-to-ceiling walls) for the following personnel.

Field office manager
Assistant Manager
Unit Supervisors
Accident Prevention Program Manager
Administrative Officer

a. Reference Appendix 1 to determine space allocations for the above positions.

b. Although other persons may be assigned a private office, such assignments shall be made on a case-by-case basis and only when the use of workrooms will not serve the need. Such consideration must be absorbed within the overall office space allocation for administrative space.

18. ADMINISTRATIVE SPACE - GENERAL CONSIDERATION.

a. Reception Area. All field offices will be provided a reception area. The reception area size will depend on the size and requirements of the office (reference Appendix 1). The area should have a counter with built-in shelves and a visitor control barrier. The counter with gate should be specified in the SFO of leased space, and it should be constructed and installed by the lessor. The waiting area should include sufficient space for the

number of visitors normally anticipated and chairs to accommodate them. For security reasons, the reception area will be located at the facility entrance, and all visitors will be required to check in with the office personnel. A public (pay) telephone should be considerd for the reception area to enable visitors to make personal calls.

b. Telephone Service.

(1) Telephone outlets shall be installed at each work station to accommodate each telephone instrument, as well as each FAX location, Local Area Network (LAN) computer station, and the LAN file server. The quantity of telephone outlets should be specified in the SFO.

(2) Consideration should be given to installation in special use space, i.e., conference rooms, training rooms, break rooms, etc. A straightline telephone instrument, limited to inside communication, could be provided in the reception area so that visitors may call the inspectors to announce their arrival. The quantity of telephone outlets should be specified in the SFO.

(3) Identify the appropriate equipment needed by the employees. Consider system features; i.e., speaker phone, paging system capability, voice mail capability, etc.

(4) Cabling requirements for LAN and computer and/or printer equipment must also be taken into consideration during the telephone service planning stage. Cables must be either teflon coated or installed in conduit to meet fire safety code.

c. Electrical Service. In addition to national/local code requirements, computer equipment should utilize isolated power sources not used by major appliances or other office equipment. Also, surge protectors should be incorporated into the system to minimize fluctuations in electrical current. The quantities and types of all electrical outlets should be specified in the SFO.

d. Heating, Ventilation, and Air Conditioning (HVAC). Special consideration should be given to supplemental HVAC and control requirements for special use type space, i.e., conference, training, break, microfiche/library, examination, interview, and LAN rooms. The same consideration may also be required for private office space of less than 150 square feet. Supplemental HVAC requirements should be specified in the SFO.

e. Soundproofing. Floor, wall and ceiling soundproofing should be a consideration for the manager, supervisors, administrative officer, LAN administrator, training and conference rooms. Secure conversations routinely take place requiring such soundproofing. Computer noise and training requirements would also dictate the need for soundproofing. All soundproofing material, including carpeting, must meet environmental safety and health standards. In addition, carpet must be static-free type in computer areas. Soundproofing or sound conditioning requirements should be specified in the SFO.

f. Secure Rooms. Each Flight Standards facility will have a secure file room and secure LAN file server room constructed of building standard ceiling high partitioning with motion detector, localized alarm system and cypher door lock. The office manager should consult FAA Order 1600.6, Chapter 6, and regional security personnel for specifics. All security requirements should be specified in the SFO and amortized in the lease.

g. Signs and Parking Accommodations. Signs to direct visitors to the Flight Standards facility, as well as adequate parking accommodations for visitors, employees, and Government owned vehicles should be provided by the lessor at no additional cost within the space lease. Parking accommodations must be adequately lighted for security reasons. Signage requirements should be specified in the SFO.

h. Parking Facilities. Flight Standards offices located in FAA leased, FAA-owned and GSA-controlled space are provided parking facilities based on the criteria contained in CFR 101-6.3, Ride Sharing, and CFR 101-20.104, Parking Facilities. Parking space requirements should be specified in the SFO.

19. ADMINISTRATIVE SPACE - SPECIAL TYPE SPACE.

a. Break Room. Depending on physical location of the office and accessibility to food facilities, a break room may be justified. The break room should contain at least a sink with disposal in a base cabinet, kitchen cabinets, counter space of at least 4 feet, and sufficient electrical outlets to accommodate a microwave oven, refrigerator, and other kitchen type appliances. The office is responsible for procuring the microwave, refrigerator, table, chairs, and any other appliances/housewares required, unless otherwise offered by the lessor at no cost. All plumbing, exhaust, and cabinetry requirements should be specified in the SFO.

b. Training Room and Conference Room. All offices will be provided a training room and a conference room in accordance with the guidelines in Appendix 1.

(1) Training rooms and conference rooms require special design considerations regarding fixed equipment requirements, such as: projection equipment placement, conference cabinet with projection screen, flip chart, dry erase writing surface, teleconferencing capabilities, video/teleconferencing equipment placement, podium requirements and placement, overhead projector placement and special furniture requirements.

(2) See paragraphs 18c, d and e regardng electrical, HVAC, and soundproofing requirements. A LAN outlet should also be located here.

c. Secure File Room. All facilities will be provided a secure, lockable file room (or other acceptable means) to provide internal security for enforcement investigation reports, written testing materials, privacy act materials, temporary airmen certificates, requests for access to aircraft, and any other materials of a sensitive nature. Refer to Appendix 1 for information regarding space requirements. See paragraph 18f regarding security requirements.

d. Secure LAN File Server Room. All offices will be provided with a secure lockable LAN room to provide internal security for LAN equipment and software. Special consideration should be given to providing supplemental HVAC control due to the BTU heat load of the file servers. Managers have the option to collocate LAN Administrators with the LAN room (reference Appendix 1). See paragraphs 18c, d, and h regarding electrical, HVAC, and security requirements.

e. Oral/Written Examination/Interview Rooms. All facilities will be provided oral/written examination/interview rooms. The number of such rooms allowed is dependent on the size and requirements of the office (reference Appendix 1). In any case, one such room should contain a glass viewing window or other provision for the administration of written examinations and be so located that they may be easily monitored by the administrative staff. Special requirements should be specified in the SFO.

f. Microfiche/Technical Library Room. All offices will be provided with a microfiche/technical library Room in accordance with the guidelines of Appendix 1. Special consideration should be given to including built-in wall shelves to accommodate the technical library. A LAN outlet should be provided. Special library equipment and technology (e.g., CD ROM) should also be considered. Special requirements should be specified in the SFO.

g. Accident Prevention Program Manager Publication and/or Equipment Storage Room. All accident prevention program managers will be provided storage room in accordance with the guidance in Appendix 1. Special consideration should be given to including built-in wall shelves to accommodate publications/equipment storage needs. Location of this storage area should be convenient to exits to facilitate movement of publications and equipment. Special requirements should be specified in the SFO.

h. Computer Based Instruction (CBI) Learning Center. When designing a CBI learning center, consider the following information. Typically, this area can be located in building standard space and will not require any special buildouts. The environment should be free from outside distractions such as noise or activity. Windows and doors should be carefully placed so that sunlight does not fall directly on the face of the computer display. Subdued or indirect lighting is best, yet, proper lighting for reading books, diagrams and schematics, should be provided. Storage cabinet(s) should be available for various learning resources which make up the courses (video discs, CD-ROMS, books, and reference materials).

i. Accident Investigation and Personal Protective Equipment Storage. A storage closet should be provided to contain accident investigation equipment: clothing, boots, camera, portable radios, flashlights, personal protective equipment(PPE), etc. PPE should be stored separately and in such a way as to be readily inventoried.

j. Biologically Hazardous Material Storage. If the office exposure control plan (ECP) calls for storage of any bio-hazard material, an area not accessible to the general public must be made available and specifically designated.

20. RESERVED.

CHAPTER 4. EQUIPMENT AND FURNISHINGS
SECTION 1. OFFICE EQUIPMENT

21. EQUIPMENT. State-of-the-art office equipment shall be considered in the set up of the facility. Floor plans should include space for special items and, if appropriate, special electrical power and service (maintenance) access areas.

22. FILES. Consider high-density, efficient, and secure file systems that are complementary to the office decor. (A file cabinet and shelves may be made available for use by the union representative in accordance with the provision of the Collective Bargaining Agreement, Article 79.)

23. COPIER. The copier of choice should be medium or high speed (considering the size of the office) and should be placed in a location that is accessible to all office personnel yet not distracting to the work areas. Location should also consider heat and dust generated by the copier. Some copiers, particularly high-speed models, require a special electrical outlet which should be noted in the SFO. Nearby storage of copier supplies is desirable.

24. MICROFICHE READER/PRINTER. All agency directives and advisory circulars are available in microfiche. There are also microfiche libraries available commercially. A microfiche reader/printer is required in most field offices. A type that uses plain paper, dry process printing, is recommended. This equipment should be located in a quiet area. If a special electrical outlet is required, it should be specified in the SFO.

25. TELEFAX/FACSIMILE EQUIPMENT. A compact, high-speed model with fast memory is recommended.

26. SHREDDER. A medium capacity paper shredder is recommended to assist in security destruction of records and should be located near the administrative officer.

27. BOTTLED WATER. Bottled water may be procured by the Acquisition Management Branch for the employees' use if local water conditions warrant. If provided as a matter of convenience, the employees must support the cost of the water service. Consider locating this service in the break room described in paragraph 19a.

SECTION 2. SYSTEMS FURNISHINGS

28. FLIGHT STANDARDS POSITION. Systems furnishings have become the standard for most business and Government offices. This order establishes the position that, provided funding is available, systems furnishings will be the standard for the modernization of a Flight Standards field facility. The order of precedence for

Government acquisiton of furnishings dictate consideration of Federal Prison Industries (UNICOR) ahead of GSA Federal Supply Schedule contracts.

a. There are many advantages to systems furniture environments. These include:

(1) Efficient Space Management - there is more for less. Less space, more workstation.

(2) Professional Environment - employees express pride and ownership for their space.

(3) Improved Productivity - work privacy significantly increases the efficiency and quality of work.

(4) Long Term Cost Savings - although systems furnishings incur a major, up-front investment, the space savings and increased productivity quickly provide a return.

(5) Versatility - quick changes; movement of workstations is easier with no construction requirement.

b. The major disadvantage is the lump sum, large dollar investment that is required to effect the project.

29. APPROVAL PROCESS/COORDINATION. Prior to initiating any action to secure new furniture, managers must coordinate their proposal with the Flight Standards Division Manager to obtain approval to begin the process. Division Managers, as part of national strategy and working through the regional PRC's, are developing five-year office modernization plans/priority lists to be implemented as dollars become available. Coordinaton is essential to ensure fairness in implementing the modernization effort.

a. Local information regarding cost and availability shall be considered when determining the cost/benefit feasibility of purchase, lease, or lease-to-purchase options. In most instances, purchase will be the most cost beneficial; however, funding may require another method or combination of methods to achieve the best result. Not all GSA contracts allow more than one option. Ensure that the vendor will afford the opportunity for multiple purchase options if that is a requirement.

b. Appendix 4 provides information regarding prototypical drawings and specifications for generic workstations, installation requirements, and how to begin a systems furniture installation project. Prototypicals may be enhanced as required to accommodate need. Be conservative, however; these workstations are versatile and can be modified at another time as resources permit.

SECTION 3. RECEPTION FURNISHINGS

30. RECEPTION AREAS. The reception area furnishings may be systems, modular, or conventional type but must complement the office in design. This area represents the first image of the office and will set the tone for the visitor's expectation. In accordance with the guidance in paragraph 18a, the reception area must include the following equipment:

(1) A counter top, glass partition, or gate system will be provided to separate the reception area from the office area, limiting access.

(2) Appropriate flags, the DOT and FAA Seals, a couch, comfortable chairs, coffee table, etc., should decorate the area.

(3) Drapes, vertical blinds, plants, and/or magazine racks are other considerations. Drapes and vertical blinds can be specified in the SFO and provided by the lessor.

31.-35. RESERVED.

CHAPTER 5. PROCEDURES AND COORDINATION PROCESS

36. ORIGINATING OFFICE PROCEDURES. This order establishes standardized requirements for Flight Standards field office space. The guidelines contained in this order fall within GSA parameters. Any space requirements should be in accordance with guidelines established in this order.

a. When modification to existing space, acquisition of new or additional space, or release of space is desired, submit a request (memorandum, or procurement document if funds are to be obligated) to the Real Estate and Utilities Branch through the regional Flight Standards Division manager. The request should contain adequate information, along with sufficient detailed justification, for the real estate contracting officer to develop, evaluate, and validate the space requirement request.

b. The regional real estate contracting officer is responsibile to ensure leases are in the best interest of the Government and within FAA and GSA requirements. A preliminary call to the Real Estate and Utilities Branch will provide initial guidance as to what exactly is required. By showing the request for space is justified in this order, and by providing the data in the correct format, the office manager can easily move through this step in the process.

c. It is best to discuss with the real estate contracting officer and understand the lessor and lessee responsibilities and how you will interact on issues such as: parking for employees, G-cars, and visitors; security; 24-hour access; fire and emergency services; building maintenance, janitorial and cleaning service; changing environmental and OSHA standards; handicapped access; future expansion and/or renovation, painting and redecorating; signage; HVAC control; payment of rent and utilities; shades, blinds, or drapes; replacement of light bulbs. As many of these issues as possible should be covered in the lease. This will avoid future misunderstandings that are inevitable with only verbal or informal written communications.

37. COORDINATION. In any undertaking of the magnitude of designing a field office, it is necessary to coordinate with many organizations both inside and outside the agency. Early coordination could preclude later unexpected problems.

a. Although the Logistics Division Real Estate and Utilities Branch is a primary player in building the office,

the office manager is an important contributor to the successful design, building and furnishing of the office.

b. The following paragraphs provide a list of organizations with whom coordination is required. This list may not be all inclusive, since all situations are not identical; however, it is a starting point.

38. REGIONAL FLIGHT STANDARDS DIVISION. The AFS division support personnel are key to the entire process. The branch or staff tasked with these matters is a valuable source of information and a facilitator to achieving regional headquarters assistance. The office manager must work closely with the division.

39. UNION. Moving into a new facility or even changing furnishings affects "conditions of employment," and so the union representative must be included early in the planning and development stage. **HOWEVER,** the union representative will not be included in the market survey or specific site selection nor will they be involved in any real property negotiations.

40. PLANNING AND RESOURCE MANAGEMENT COMMITTEE (PRC). The regional PRC is the Flight Standards Division Manager's chief advisor on major resource matters and must be briefed and kept advised of the fiscal requirements (see paragraph 5f).

41. AIRWAY FACILITIES DIVISION. The regional Telecommunications Branch, Airway Facilities Division, provides assistance for telephone acquisition planning and funding information, and can answer technical telecommunications questions. Data and modem lines for computer hardware and networks also must be part of the telecommunications plan. Delivery and installation can be a problem when dealing with different companies and/or contractors. Someone from the field office should be assigned to coordinate and track progress of this work in addition to serving as a point of contact.

42. SECURITY DIVISION. Since field offices receive regular site audits from security personnel, the office manager must ensure that security requirements are included in the SFO. This division can provide internal security assistance in assessing the many security requirements that should be addressed in the planning stages of projected space acquisition, such as: solid doors, BEST locks, janitorial service, suspended ceiling access, security system requirements, visitor control barriers, after hours

protection, computer security, fire doors, door hinge placement, and security for written test, EIR, and Privacy Act files. Security requirements should not supersede fire safety codes.

43. AIRPORT AUTHORITY/MANAGER. Many issues such as building access, signage, G-car parking, ramp access and employee parking have to be worked out in advance. Even if the office will be located off airport, many issues remain germane.

44. LANDLORD. The real estate contracting officer will provide the manager with a copy of the lease. The real estate contracting officer may appoint the manager (or designee) as the lease management contracting officer's technical representative (COTR). However, it should be understood that the real estate contracting officer does not always appoint a COTR for every lease. The COTR reports complaints in writing to the lessor and to the real estate contracting officer where noncompliance with lease terms and conditions prevail. Proper documentation is mandatory should circumstances require withholding rent, terminating the lease, or other action by the real estate contracting officer. If a COTR has been appointed in accordance with paragraph 5b of this order, instruction for lease management will be provided from the real estate contracting officer.

45. LOGISTICS DIVISION. The Real Estate and Utilities Branch and the Acquisition Management Branch will both be involved in negotiating and contracting with the vendors, contractors, and landlords. They know the Federal regulations and will be able to advise you on such matters as sole source acquisitions and solicitations for offers.

a. The Real Estate and Utilities Branch is the contracting authority responsible for construction requirements and for negotiating your lease. This branch will provide support in location/relocation information, lease/construction information, and floorplan layout design.

b. The Acquisition Management Branch is responsible for issuing a purchase order to acquire your furnishings or to contract for services. This branch assists in determining lease/purchase of equipment and furnishings and with special requirements.

c. The office manager is responsible for ensuring that the Real Estate and Utilities Branch and the Acquisition Management Branch have the correct information regarding AFS requirements before a lease, contract, or purchase order is pursued.

46. VENDORS, CONTRACTORS. In order to generate a Procurement Request from the Flight Standards Division to the Logistics Division, the office manager must do all the groundwork. The information on the procurement request must be sufficient for the contracting officer to produce a purchase order, solicitation for offers, or lease. This will require the office manager to obtain data on prices, sizes, colors, installation and delivery schedules, and a variety of other details. A contracting officer can only issue a purchase order for what is needed if the information he or she is dealing with is accurate and exact.

NOTE: The office manager cannot make a contract, verbal or otherwise, with a contractor or vendor. The office manager can only gather information. The contracting officer from the Logistics Division Real Estate and Utilities Branch and Acquisition Management Branch make the contract. It is important to recognize the potential for and avoid the possibility of unauthorized procurements (implied contracts) that could occur during data gathering activity.

47.-50. RESERVED.

CHAPTER 6. SOLICITATION FOR OFFERS (SFO)

51. SOLICITATION PACKAGE. The SFO is a document that states the requirements for the facility space preparation so that lessors can submit offers for the lease. An SFO must include all the requirements for the design and construction of the office. The SFO is prePared by the regional Real Estate and Utilities Branch in coordination with the office manager. It is important to understand that the leasing process must be done competitively to comply with Federal Procurement Regulations.

52. DEFINING THE REQUIREMENTS. Appendix 1 to this order provides a guideline for the development of an SFO as it delineates design requirements. Any special requirements that are included in the construction must be included in the SFO.

53. FUNDING. The cost of special buildouts (internal construction items such as additional offices, special electrical requirements, or other alterations not identified in the original plan) are usually amortized over the life of the lease. If the space is leased by FAA, the lease rental costs are funded by Flight Standards Service. However, if the space rental or quantity exceeds delegated or expanded authorities, the space is acquired by GSA. The GSA rent cost is budgeted and funded through the headquarters centralized GSA rent budget.

54.-60. RESERVED.

APPENDIX 1. SPACE REQUIREMENTS WORKSHEET

This appendix has been provided as a worksheet for use when planning the office space. Not all descriptions will be applicable in all instances. Reference paragraph 13 regarding field facilities collocated with regional offices.

FLIGHT STANDARDS DISTRICT OFFICE
SPACE REQUIREMENTS ESTIMATE 1/

Space Classification	Authorized Space (square feet) based on range of total authorized office personnel a/. Up to 25	26 to 50	Over 50
A. OFFICE TYPE SPACE			
1. Primary Office Space	A1 _____*	A1 _____*	A1 _____*

* Total authorized office personnel multiplied by 125 square feet planning factor equals maximum "people" space block allocation, including circulation space. Space layout plan should not exceed the maximum "people" space block.

Specific allocations for space planning and layout purposes, including space for personal computers, follow:

Manager	225	225	225
Assistant Manager	-	150	150
Unit Supervisors	2 @ 150	3 @ 150	4 @ 150
Accident Prevention Prog Mgr	125	125	125
Administrative Officer	100	100	100
Secretary/Reception b/	2 in 325	3 in 400	5 in 475
Inspectors	100 each	100 each	100 each
LAN Administrator	semi-private c/	semi-private c/	semi-private c/
Para-Technicals, etc.	ceiling-high or systems furniture	ceiling-high or systems furniture	ceiling-high or systems furniture

a/ Personnel is defined as the peak number of persons to be housed in office type space during a single 8-hour shift, regardless of how many workstations are provided for them. Included are permanent federal personnel, temporaries, part time, seasonal, and contractural employees, as well as any authorized vacancies.

b/ Amount includes 175 square feet of space for files, copier, fax, seating arrangement and circulation space; 75 square feet each additional secretarial workstation at collocated facilities.

c/ Semi-private means a ceiling-high partitioned room large enough for 2 or more employees to share. Desk space may be separated by acoustic screen dividers if systems furniture is not available.

2. Support Area Space - Actual requirements up to 22 percent of Primary Office Space amount unless justified and validated. See explanation on reverse concerning offices with eight (8) or fewer employees.

	50-(2@25)	75-(3@25)	100-(4@25)
Coat Closets	100	150	200
Administrative Supply and Storage	100	150	200
Copy Machine/Mailroom	100	150	150
Total Support Area Space	A2 250	A2 375	A2 450

3. TOTAL OFFICE TYPE SPACE (Sum A. 1.* plus A. 2.)	A3 _____	A3 _____	A3 _____
B. STORAGE TYPE SPACE 2/	B N/A	B N/A	B N/A
C. SPECIAL TYPE SPACE 3/			
APPM/Publications Storage 4/	100	150	200
Microfiche Rm/Technical Library 4/	150	200	225
Examination/Interview Rooms 5/	2 @ 150	3 @ 150	4 @ 150
Private Toilet/Shower 6/	100	100	100
Special Conference Rm 7/	300	400	600
Secure File Room 8/	150	200	250
Training Room 9/	150	200	250
Break Room 10/	150	200	300
LAN/PBX Rm 11/	100	100	100
TOTAL SPECIAL TYPE SPACE	C 1,500	C 1,950	C 2,550
D. GRAND TOTAL SPACE REQUIREMENT (Sum A. 3. plus C.)	D _____	D _____	D _____

NOTES:

1/ These space authorizations apply to Flight Standards District Offices and Certificate Management Offices. These space authorizations are intended as planning factors to estimate the total overall space requirements for an entire facility or organization. The table on the reverse reflects typical space allocations for those typical functional areas applicable to a specific type of FAA field organizational element.

The amounts of space shown should not be perceived as precise entitlements. The exact actual square footages are ultimately determined by other building design factors (e.g., the reflected ceiling plan, configuration of available space, window and column spacing, or other architectural and/or mechanical interior or exterior features. The space authorization amounts shown are upper limit maximums which should not be exceeded.

New assignments with fewer than eight (8) employees are exempt from the numerical requirements, but shall be made at the most efficient utilization rate consistent with sound principles of space planning and layout.

Private offices of 100 square feet or less should not be provided to avoid construction build-out costs for additional heating/air-conditioning systems equipment, partitioning and doors. Elimination of small offices/rooms precludes inherent heating/air-conditioning operating problems which inevitably occur due to system imbalances. Use of systems furniture is encouraged to minimize space build-out and operating costs, while maximizing the overall quality and utilization of the space.

2/ Storage type space is not finished to office standards. Also includes inside parking and warehouse type space. See FAA Order 4665.3, Policy on Parking Accommodations at FAA Facilities, for FAA parking criteria.

3/ Special type space has unique architectural or construction features, requiring the installation of special equipment or varying costs to construct, maintain, and/or operate as compared to office and storage space.

4/ APPM/Publications Storage Room and the Microfiche Room/Technical Library should include built-in wall shelves.

5/ Examination/Interview Rooms should include one room with glass viewing window for written examinations.

6/ Private toilet and shower is needed for inspectors use for post accident, incident, agricultural, chemical spill, etc., to include toilet, sink and shower. Co-ed facility is not for general use.

7/ Special conference room has audio-video equipment, and/or separate heating, ventilating and air-conditioning (HVAC).

8/ Secure file room requires security lock due to sensitive nature of material, such as written testing materials, Privacy Act materials and Enforcement Investigation Reports.

9/ Training room has CBI equipment and/or separate HVAC.

10/ Break Room space allocations are made primarily in remote locations, where building food service facilities, e.g., snack bars, cafeterias, restaurants, etc., are not readily available. Food service space allocations are subject to opportunities for shared food service space with another collocated FAA field activity. Normally the FAA and GSA lease solicitation for offers (SFO) provide a sink with disposal in a base cabinet, wall kitchen storage cabinets, and electrical outlets for microwave and refrigerator. The occupying activity procures the microwave, refrigerator, table, chairs and any other appliances/housewares.

11/ LAN/PBX Room needs supplemental HVAC due to BTU heat load of the LAN file server, and security lock due to sensitive nature of room contents, including software programs.

Build-out costs for GSA space - The Solicitation for Offers for GSA leases include allowances for ceiling high partitioning, doors and electrical and telephone outlets needed for general purpose office type space. The above-standard build-out for special type space, e.g., special conference rooms, LAN cabling, special security requirements, etc., must be funded by the requesting office in lump sum on a Reimbursable Work Authorization, GSA Form 2957, following completion of GSA and lessor negotiations. Barring special circumstances, FAA can vacate the space and not be obliged to reimburse GSA rent for the space beyond a maximum of 120 days following official notification that the space will be vacated and released.

Build-out costs for FAA space - The SFO for FAA leases does not include any allowances for build-out. The prospective lessors who compete for the FAA lease submit cost proposals for the build-out which is normally amortized in the lease rental for a minimum of 50 percent to a maximum of 80 percent of the entire lease term. The build-out costs are amortized in the lease rental payments. Should FAA terminate the lease prior to completion of the amortization period, liquidated damages may be due the lessor.

APPENDIX 2.
SAMPLE REQUEST FOR OFFICE SPACE

ACTION: Request for Additional
Office Space, XXXXXXX FSDO

Manager, Flight Standards District Office

Manager, Real Estate and Utilities Branch, XXX-56
THRU: Manager, Flight Standards Division, XXX-200

This district office has outgrown its current facility. We request that you begin a project to provide additional office space. This may require a new location as well since there is no other space available at this location.

Our projected staffing through Fiscal Year XX is 46 employees, identified as follows:

Office Manager	1
Assistant Manager	1
Supervisors	6
Secretaries	4
Administrative Officer	1
Technical Employees	3
Aviation Safety Inspectors	30

We are currently working at a staffing level of 32 in a facility that provides overall a space ratio of 109 square feet per person (3500 square feet of space). While this does not appear on paper to be a major problem, I would like to point out that the following office functions and associated space requirements are also being accommodated within that ratio.

Oral Exam Area
Written Exam Area
Accident Prevention Specialist Secure Storage Area
Reception Area
Conference Room
Data Entry Area

We also wish to maximize space usage at a new location by leasing or purchasing systems furnishings. Also, since we are remote from most eating establishments, we require a break room and associated facility equipment.

2

Order FS 4420.1 provides the office space and furnishings guidelines for Flight Standards field facilities. We will be happy to work with you in defining our specific requirements. Our lease for this location (Lease No._____) expires on (Date). We appreciate your efforts on our behalf.

Please call me at (XXX) XXX-XXX to discuss.

Manager

APPENDIX 3. SAMPLE LEASE SOLICITATION FOR OFFERS (SFO)

This appendix provides, for your information only, a generic space leasing solicitation for offers (SFO). It is not intended as a model for application of this order. It is provided in this order as a sample to assist Flight Standards managers in defining specifications and requirements.

As described in paragraph 35, the Real Estate and Utilities Branch and the Acquisition Management Branch will both be involved in negotiating and contracting for office space. These organizations are responsible for issuance of the SFO.

This appendix consists of two sections:

Section 1, Solicitation for Offers.

Sample cover page
Instructions
General space Requirements
Pages 1 - 12. This should serve as the basis for your SFO. All special requirements can be added as needed. The regional Logistics organizations are authorized to make changes to this section, as appropriate.
Form 3517B, General Clauses
Pages 1 & 2. This form, as written, will be required for all SFO/leases.
Form 3518A, Representations and Certifications
Pages 1 - 3. This form, as written, will be required for all SFO/leases.
Safety and Environmental Management Checklist
Pages 1 & 2. This form, as written, will be required for all SFO's.
Form 1364, Proposal to Lease Space
Pages 1 & 2. This form, as written, will be required for all SFO's.
Form 1217, Lessor's Annual Cost Statement
Pages 1 & 2. This form, as written, will be required for all SFO's.
Standard Form 2, U.S. Government Lease For Real Property
Pages front & back. This form will be provided with the SFO for informational purposes.

Section 2, Additional Field Documents.

Market Survey Form
This form should be completed for each location visited or offered for consideration. This form becomes part of your file. A minimum of one photo should be taken of each property.

Action Summary Form
This form is intended to assist you in having all your offers together for consideration.

Optional Page
This page contains optional clauses that might be considered for use in lieu of those contained in the General Space Requirements.

File Requirements Not Provided with this Package.

Acquisition Plan
This should indicate the authority you are using to obtain space and tell how you are obtaining competition (which must be addressed in all space leasing actions).

Narrative and Map of Boundaries
This should clearly show your area of consideration

Tear Sheet from Advertisement
Advertising required for all space over 10,000 net usable square feet (nusf).

Schedule of Proposed Action
Can be part of acquisition plan.

Spread Sheet with Narrative Showing Current Space Compared to Proposed Space
This should show comparison between current and proposed rent, square feet, number of people, and address, as a minimum.

Determination of Value
Over 10,000 nusf, this must be an appraisal. Under 10,000 nusf, this can be done through a market survey.

FEDERAL AVIATION ADMINISTRATION
SOLICITATION FOR OFFERS

THE FEDERAL AVIATION ADMINISTRATION IS INTERESTED IN LEASING APPROXIMATELY XX,XXX SQUARE FEET OF FLOOR SPACE.

DELIVER OFFERS TO:

Federal Aviation Administration
NAS Support Division (ASM-740)
Room 708-711
800 Independence Avenue, SW
Washington, DC 20591
ATTN: Xxxxxx Xxxxxx
(XXX)XXX-XXXX

OFFERS MUST BE RECEIVED BY: _____

(THIS PAGE INTENTIONALLY LEFT BLANK)

SECTION A - GENERAL SPACE REQUIREMENTS

A1. LOCATION. The space must be in an area bounded by:

North:
East:
South:
West:

A2. TYPE AND AMOUNT OF NET USABLE SPACE.

a. First-class ___(type of space)___ is required. Space offered must be in a quality building of sound and substantial construction and shall conform or be capable of being altered to conform with the requirements set forth herein. Office space must have windows unless waived by the contracting officer.

b. Offers are solicited for a minimum of _____ to a maximum of _____ net usable (see Section D1 for definition) square feet of ___(type of space)___.

A3. TERM OF LEASE.

The lease term is for one (1) year with FAA having the option to renew for _____ additional years. FAA may terminate this lease at anytime after the initial term on _____ days written notice to the lessor. The Government's option shall be deemed exercised and the lease renewed each year for one (1) year unless the Government gives _____ days notice of termination and provided that adequate appropriations are available from year-to-year for the payment of rentals.

A4. HOLDOVER.

If, after expiration of the lease, the Government shall retain possession of the premises, the lease shall continue in force and effect on a day-to-day basis not to exceed 90 days. Rent shall be paid monthly in arrears on a prorated basis at the rate paid during the lease term.

A5. OFFER ACCEPTANCE PERIOD.

Offers are due by _____, and must remain open until _____.

Offers are to be sent to the Contracting Officer: John Doe, Jr.
Federal Aviation Administration
Logistics Division (XXX-56)
1234 Flight Street
Xxxxxxx, XX XXXXX

A6. OCCUPANCY DATE.

Occupancy is required within _____ calendar days from the date of award or from receipt of plans and samples, whichever is later. FAA shall deliver layout drawings and necessary finish selection to the successful offeror by _____.

A7. PROPOSAL TO LEASE SPACE.

All offers submitted shall be in accordance with this specifications package (Sections A-E). Offers shall be prepared on Standard Form _____ and its attachments consisting of _____.

A8. PLANS.

a. Offeror must submit with the offer two copies of a schematic floor plan(s) drawn to a scale of 1/8" to the foot indicating the space offered and showing the location of all existing windows, entrances, corridors, partitions, columns and exit-

ways.

b. Thirty days after occupancy, lessor must submit reproducible floor plans to a scale of 1/8" showing rented space and identifying entrances, exits, stairs, windows, partitions, closets, etc.

A9. PAINTING.

Prior to occupancy all surfaces must be newly painted in colors acceptable to FAA.

SECTION B - GENERAL BUILDING REQUIREMENTS AND SPECIFICATIONS

B1. HVAC.

Heating, ventilation and air-conditioning systems are required which maintain a temperature range of 68-72 degrees Fahrenheit during the heating season and a range of 70-72 degrees Fahrenheit during the cooling season. Temperatures in the zone between 65 and 80 degrees are permissible as long as heating systems are not operated to maintain temperatures above 68 degrees, and cooling systems are not operated to achieve temperatures below 78 degrees. These temperatures must be maintained throughout the leased premises and service areas regardless of outside temperatures during lease specified hours of operation.

During nonworking hours the space temperature shall be maintained no higher than 55 degrees during the heating season. No cooling is to be provided during nonworking hours.

Thermostats will be secured from manual operation by key or locked cage. A key will be provided to the FAA Office Manager, if requested.

B2. LIGHTING.

Modern, diffused, fluorescent fixtures with thermally protected ballasts shall be provided capable of producing and maintaining a uniform lighting level of 50 foot candles at working surface height throughout the space.

B3. CEILINGS.

Ceilings must be at least 8'0" and no more than 11'0" clear from floor to the lowest obstruction. They must have acoustical treatment with a flamespread of 25 or less and smoke development rating of 50 or less.

B4. FLOOR LOAD.

Office areas shall have a minimum live load capacity of 50 pounds per square foot live load plus 20 pounds per square foot for movable partitions. Storage areas shall have a minimum live load capacity of 100 pounds per square foot including movable partitions.

B5. TELEPHONE AND ELECTRICAL OUTLETS.

Lessor shall provide _____ telephone outlets and _____ duplex electrical outlets at locations to be determined by the Government.

UNIT COST FOR ADJUSTMENTS

a. Several paragraphs in this package specify means for determining quantities of items such as electrical outlets and partitions. These are Government projections to assist the offeror in developing an annual price for the space offered. Actual quantities may not be determined until after the lease is awarded and the space layout completed. When the Government layout departs from the projection, the lessor will be paid for the actual quantity provided if the total number of items varies more than 15 percent above or below the estimated quantity. FAA will make a lump

sum payment or rental increase if the amount of material required by the layout is more than specified or take credit from rental if the amount is less than specified.

b. Offerors are required to state unit prices for the following items that are checked. Prices shall be quoted as fully installed and finished, in the blanks below.

_____ The price per linear foot of office subdividing ceiling-high partitioning -- $_____.
_____ The price per floor mounted duplex electrical outlet-- $_____.
_____ The price per wall mounted duplex electrical outlet -- $_____.
_____ The price per floor mounted fourplex (double duplex) electrical outlet -- $_____.
_____ The price per wall mounted fourplex (double duplex) electrical outlet -- $_____.
_____ The price per dedicated clean electrical computer receptacle -- $_____.
_____ The price per floor mounted telephone outlet -- $_____.
_____ The price per wall mounted telephone outlet -- $_____.
_____ The price per interior door -- $_____.

And other items listed below:

_____

_____

_____

B6. REST ROOMS.

Separate toilet facilities for men and women shall be provided on each floor where the Government leases space. Water closets and urinals shall not be visible when the exterior door is open. Each toilet room shall contain toilet paper dispensers, soap dispensers, paper towel dispensers, waste receptacles, a coin operated sanitary napkin dispenser with receptacle for each women's toilet, disposable toilet seat cover dispensers, a convenience outlet, and hot and cold water. (The Government will advise if additional facilities are required.)

B7. DRINKING FOUNTAINS.

The lessor shall provide a minimum of one chilled drinking fountain on each floor where the Government leases space.

B8. PARTITIONS.

Lessor shall construct _____ linear feet of finished and painted ceiling-high partitions, which includes interior doors. These partitions shall have low sound transmission, flamespread, and smoke development properties. Demolition of existing improvements necessary to satisfy the Government's layout shall be done at the lessor's expense.

B9. WINDOW AND FLOOR COVERING.

a. Windows. All exterior windows shall be equipped with window blinds or draperies.

b. Floors. Carpeting shall be provided.

Existing floor and/or window covering or carpeting may be accepted, provided they are in good condition. If accepted by the contracting officer, these items must be thoroughly cleaned prior to the Government's occupancy.

B10. DOORS.

Exterior doors shall be weather tight, equipped with automatic door closers and open outward. Corridor and outside doors must be equipped with cylinder locks and door checks. All locks must be master keyed. The Government must

be furnished at least two master keys and two keys for each lock. Doors must have matching hardware stops. Hardware for doors in the means of egress shall conform to NFPA Standard No. 101.

B11. FIRE AND SAFETY REQUIREMENTS.

Buildings in which space is offered for lease shall meet the requirements of the GSA firesafety standards. The space will be inspected by the Government and offerors will be advised of the necessary work to meet these requirements. (A copy of the firesafety standards is available upon request.)

For buildings in which the space offered for lease to the Government is on the eighth floor or above, automatic elevator emergency recall is required. If the highest floor of Government occupancy is on the 6th or 7th floor and automatic emergency elevator recall is not provided, this function shall be manually achieved using a key that the local fire department possesses or has ready access to. No recall system is required if the Government's space is on the 5th floor or below.

When any portion of the Government's occupancy is on the 12th floor or above, automatic sprinkler protection shall be provided in all Government leased space, as well as all floors in the building below (excluding garage areas) the Government's occupancy. Additionally, any space occupied by the Government below grade, with the exception of garage areas, shall have automatic sprinkler protection.

B12. SPECIFICATIONS FOR MAKING BUILDINGS AND FACILITIES ACCESSIBLE TO AND USABLE BY THE PHYSICALLY HANDICAPPED.

Offers are solicited for space that meet the accessibility requirements outlined in paragraph B13 a-f. The Government shall first consider those offers which fully meet these requirements. If no offer fully meets these requirements, consideration will be given to those offers which substantially meet this criteria based upon an evaluation of all offers by the contracting officer or his designee.

If no offer meets the requirements described above, the contracting officer will make an award consistent with the other requirements of this specifications package with due consideration to the extent offers can meet accessibility standards for main entrances, elevators, toilets, and water fountains.

B13. HANDICAPPED ACCESSIBILITY REQUIREMENTS.

a. Access/Entrances

Access for wheelchairs shall be provided from the street, sidewalk or parking (if provided) to every reasonable subdivision of space where a physically handicapped person may visit or work. At least one main entrance shall be accessible. If power-operated entrance doors are provided, they shall comply with ANSI 156.10 (1979).

b. Drinking Fountains

Water fountains shall be accessible to and usable by the physically disabled. They shall have an up-front spout and control which is located no higher than 36 inches above the finished floor. Controls shall be hand or hand and foot operated.

Conventional floor mounted water fountains can be serviceable to individuals in wheelchairs if a clear floor space of 30 inches by 48 inches is provided adjacent to the fountain. A wall mounted hand operated cooler may serve the able bodied and physically disabled equally well when the bubbler is mounted no higher than 36 inches and there is clear knee space between the bottom of the apron of the cooler and the floor at least 27 inches high, 30 inches wide and 17-19 inches deep. A fully recessed water fountain is not recommended. The water fountain should not be set into an alcove unless the alcove is wider than 30 inches and not more than 2 feet deep.

c. Elevators

Elevators shall conform to the requirements of the American National Standard ANSI A117.1-1986 and shall be inspected and maintained in accordance with American National Standard A17.2, Inspector's Manual for Elevators, or equivalent local code. They shall also comply with local codes and ordinances.

Entrance.

The elevator entrance should provide a clear opening of at least 36 inches. The inside measurements shall be a minimum of 51 inches deep and 68 inches wide.

Call Buttons.

Fifty-four inches, (forty eight inches preferred) is the maximum permissible height for the highest call button inside the cab, as well as the highest operable part of a two-way communication system. The lobby call button should be centered nominally at 42 inches above the floor but no higher than 54 inches maximum.

d. Restrooms.

All public toilet rooms must have accessible fixtures, accessories, doors and adequate maneuvering clearance. The interior of toilet rooms, having more than one stall, shall allow an unobstructed floor space of 5 feet in diameter, measured 12 inches above the floor.

At least one men's and one women's toilet room on each floor where the Government leases part of the floor, or all public toilet rooms where the Government leases the entire floor, shall have one toilet stall that:

* Is 60" wide.

* Has a minimum depth of 66" when wall mounted water closets are used or 59" when floor mounted water closets are used.

* Has a clear floor area.

* Has a door (where doors are used) that is 32 inches wide and swings out.

* Has handrails on each side, 33-36 inches high and parallel to the floor, 1 1/4 to 1 1/2 inches in outside diameter, with 1 1/2 inch clearance between rail and wall, and fastened securely at ends and center. They shall have no sharp edges and must permit the continuous sliding of hands.

* Has a water closet mounted at a height from 17 to 19 inches, measured from the floor to the top of the seat. Hand operated or automatic flush controls shall be hand operated and mounted no higher than 44 inches above the floor.

A stall measuring 60" wide by 66", but preferably 72" deep, may be acceptable as determined by the contracting officer.

At least one lavatory shall be mounted with a clearance at least 29 inches from the floor to the bottom of the apron. The height from the floor to the top of the lavatory rim shall not exceed 34 inches. Faucets shall be lever operated, push type or electronically activated for one hand grasping. Drain pipes and hot water pipes under a lavatory must be covered, insulated, or recessed far enough so that wheelchair individuals without sensation will not burn themselves.

One mirror with shelf shall be provided above the lavatory at height as low as possible and no higher than 40 inches above the floor, measured from the top of the shelf and the bottom of the mirror. A common mirror provided for both the able and disabled must provide a convenient view for both. Toilet rooms for men shall have one wall mounted urinal with an elongated lip, with the basin opening no more than 17 inches above the floor. Accessible floor mounted stall urinals with basins at the level of the floor are acceptable. The toilet room shall have at least one towel rack, towel

dispenser and other dispensers and disposal units mounted no higher than 48 inches from the floor or 54 inches if a person in a wheelchair has to approach it from the side.

e. Switches

Switches and controls for lighting, heat, fire alarms and all similar controls of frequent or essential use shall be placed no higher than 54 inches from the floor with 48 inches preferred. Switches shall be located on columns or walls by door openings.

f. Interior Doors

Doors must be solid core and at least 36 by 80 inches with a minimum opening of 32 inches and of sturdy construction. They shall be operable by a single effort and must be in accordance with national building code requirements.

SECTION C - SERVICES, UTILITIES, AND MAINTENANCE

C1. GENERAL.

The following services, utilities and maintenance shall be provided by the lessor as part of the rental consideration. The lessor must have a building superintendent or a designated representative available to promptly correct deficiencies.

C2. NORMAL HOURS.

Services, utilities, and maintenance will be provided daily, except Saturdays, Sundays and Federal holidays, during the Government's working hours (___a.m. to ___p.m.) unless otherwise amended.

C3. OVERTIME USAGE.

a. The Government shall have access to the leased space at all times, including the use of elevators, toilets, lights, and small business machines without additional payment. If heating or cooling is required by the Government on an overtime basis beyond the above specified hours, they will be furnished by the lessor only when requested in advance by the FAA Office Manager _____ name & address _____ or his designee. Reimbursement to the lessor for heating or cooling will be at the negotiated rate ($ _____ per hour). Costs for personal services, i.e., engineers, or maintenance, etc. , shall only be included as authorized by FAA.

b. Lessor will not be paid for any services which are not authorized in advance by the FAA Office Manager or his designee. Upon presentation of a properly certified invoice, payment will be made by the Government for services requested and furnished.

C4. UTILITIES.

The lessor shall ensure that utilities necessary for operation are available. If the cost of utilities is not included as part of the rental consideration, the offeror must specify which utilities are excluded. The lessor shall provide separate meters for utilities to be paid for by FAA.

When FAA is to pay for utilities, the lessor will furnish the contracting officer, prior to occupancy by the Government, written verification of the meter numbers and certification that these meters will measure Government usage only.

Proration is not permissible. If the cost of utilities for heating, ventilation, and air conditioning is not included as part of the rental considerations, an automatic control system will be provided to assure compliance with heating and air conditioning provisions included in this specifications package.

C5. SERVICES.

Services shall be furnished in accordance with the following schedule showing frequency and work to be accomplished:

a. Daily

Empty trash receptacles and clean ashtrays. Sweep entrances, lobbies and corridors. Damp mop and spray buff all floors in main corridors, entrances and lobbies. Sweep and/or vacuum traffic patterned areas in offices and extend sweep or vacuum to remove obvious dirt from around and under furniture. Clean drinking fountains. Sweep and damp mop or scrub toilet rooms. Clean all toilet fixtures and replenish toilet supplies. Dispose of all trash and garbage generated in or about the building. In office areas, dust all horizontal surfaces that are readily available and visibly require dusting. Spot carpet to remove stains.

b. Every Other Day

Sweep or vacuum stair landings and steps. Police garage areas.

c. Weekly

Sweep sidewalks, parking areas and driveways.

d. Every Two Weeks

Damp mop and spray buff all floors in secondary entrances, lobbies and corridors and all office areas.

e. Monthly

Thoroughly dust all horizontal surfaces of furniture in office areas. Thoroughly vacuum and spot clean carpets and/or sweep full floor areas in office space. Spot clean wall surfaces. Mop or scrub stair steps, risers and landing. Sweep garages and garage ramps. Sweep the full floor area in storage space.

f. Every Two Months

In toilet rooms, damp wipe stall partitions and waste paper receptacles. Clean entrance and elevator rugs.

g. Quarterly

Dust vertical surfaces and walls in office areas. Wet mop or scrub loading areas, garages, ramps and driveways.

h. Semi-annually

In toilet rooms, strip resilient floors and apply four coats of finish. Strip floors and apply four coats of finish in main entrances, main lobbies and main corridors. Wash both sides of exterior windows.

i. Annually

Wash all venetian blinds. Vacuum all drapes in place. Shampoo carpets.

j. As Required

Wash or damp wipe inside and outside of wastebaskets. Wipe down and treat wood paneling. Provide initial supply, installation and replacement of light bulbs, tubes, ballasts and starters. During inclement weather, lay out floor mats in entrances and lobbies. Clean and store mats when no longer required. Perform trash removal, pest control, and lawn and grounds maintenance. Remove snow and ice before working hours to ensure building access.

7

C6. PAINTING.

All painted surfaces must be repainted after working hours at lessor's expense at least every five years. This includes moving and return of the furniture. Public areas must be painted at least every three years.

C7. SCHEDULE OF PERIODIC SERVICES.

Within 60 days after occupancy by the Government, the lessor shall provide the contracting officer with a detailed written schedule of all periodic services and maintenance to be performed other than daily, weekly, or monthly.

SECTION D - MISCELLANEOUS

D1. DEFINITION OF NET USABLE SPACE

"Net usable space" is the method of measurement for the area for which FAA will pay a square foot rate. It is determined as follows:

- If the space is on a single tenancy floor, compute the inside gross area by measuring between the inside finish of permanent exterior building walls or from the face of convectors (pipes or other wall-hung fixtures) if the convector occupies at least 50 percent of the length of exterior walls.

- If the space is on a multiple tenancy floor, measure from the exterior building walls as above and to the room side finish of fixed corridor and shaft walls and/or the center of tenant-separating partitions.

In either case, make no deductions for columns and projections enclosing the structural elements of the building and deduct the following from the gross area including their enclosing walls:

a. Toilets and lounges
b. Stairwells
c. Elevators and escalator shafts
d. Building equipment and service areas
e. Entrance and elevator lobbies
f. Stacks and shafts and
g. Corridors in place or required by local codes and ordinances.

The right to use appurtenant areas and facilities is included.

D2. NEGOTIATION AND DETERMINATION OF LOW OFFER

FAA will negotiate for the initial term and any renewal period. To determine the lowest offer the entire term will be considered. Offers will be reduced to an annual square foot rate. Price evaluation will be made on the basis of the annual per square foot cost plus the annualized cost of any items specified in these specifications which are not included in the rental. Excluded from the total square footage, but not from the annual rental, will be parking and wareyard areas. For different types of space, the composite rate will be determined by dividing the total annual rental by the total square footage minus these areas.

D3. ADJUSTMENT FOR VACANT PREMISES.

If the Government fails to occupy any portion of the leased premises or vacates the premises in whole or in part prior to expiration of the firm term of the lease, the rental rate shall be reduced as follows: The rate shall be reduced by that portion of the costs per square foot of operating expenses not required to maintain the space. Said reduction shall occur after the Government gives 30 days prior notice to the Lessor, and shall continue in effect until the Government occupies the premises or the lease expires or is terminated.

D4. UNAUTHORIZED NEGOTIATING.

In no event shall the offeror enter into negotiations concerning the space leased or to be leased with other than the contracting officer or his designee.

D5. WIRING FOR TELEPHONES.

The Government reserves the right to provide its own telephone service in the space to be leased. It may have inside wiring and telephone equipment installed by the local telephone company or a private contractor. Alternately, the Government may wish to consider using inside wiring provided by the building, if available. However, the final decision will remain the Government's.

SECTION E - SAFETY AND FIRE PREVENTION

E1. General Safety and Environmental Requirements:

A. Buildings in which space is offered for lease will be evaluated by the Government to determine whether or not an acceptable level of safety is provided. This evaluation will consider the potential for loss of life, loss of federal property, and business interruption. Potential for fire growth and spread, as well as the building's capability to resist the effect of fire, will be evaluated. In addition, the building's environmental quality will be considered, including, for example, indoor air quality, the presence, location, and condition of asbestos in the space, and levels of radon in the air. Offerors shall assist the Government in its assessments and detailed studies by making available information on building operations and providing access to space for assessment and testing.

B. The Government reserves the right to request and witness tests of safety systems on no more than an annual basis.

E2. Code Violations:

Space offered must have a valid occupancy permit issued by the local jurisdiction prior to Government occupancy. Equipment, services or utilities furnished by the lessor and activities of other occupants shall be free of safety, health, and fire hazards. When hazards are detected, they must be promptly corrected at the Lessor's expense.

E3. Portable Fire Extinguisher:

Portable fire extinguishers shall be provided, inspected, and maintained by the lessor in accordance with National Fire Protection Association (NFPA) Standard No. 10.

E4. Smoke Control:

Engineered smoke control systems, if present, shall be maintained in accordance with the manufacturer's recommendations.

E5. Manual Fire Alarm Systems:

A. A manual fire alarm system shall be provided, maintained, and tested by the lessor in accordance with NFPA Standard No. 71 and 72 in buildings which are 3 or more stories in height; In buildings occupied by 100 or more federal employees above or below grade; or in buildings containing more than 50,000 square gross floor area.

B. The fire alarm system wiring and equipment must be electrically supervised and automatically notify the local fire department (NFPA Standard No. 72) or approved central station (NFPA Standard No. 71). Emergency power must be provided in accordance with NFPA Standards No. 70 and 72.

C. When the Government's occupancy is on the 12th floor or above, all floors of the building shall have an

emergency telephone system. This system must permit 2-way communication between a control console and any emergency telephone station. Emergency telephone stations must be provided adjacent to each stairway and exit discharge from the building, at each elevator lobby on the ground floor, and at each floor which has been designated as the one for alternate elevator recall.

E6. Exit and Emergency Lighting:

Emergency lighting must provide at least 0.5 foot candles of illumination throughout the exit path, including exit access routes, exit stairways, or other routes such as passageways to the outside of the building.

E7. Fire Doors:

Fire doors shall conform with National Fire Protection Association Standard No. 80.

E8. Asbestos:

Offers are requested for space with no asbestos-containing materials (ACM), except ACM in a stable, solid matrix (e.g., vinyl asbestos tile or asbestos cement panels) which is not damaged or subject to damage by routine operations. For purposes of this "asbestos' paragraph, "space' includes the space offered for lease, common building areas and ventilation systems and zones serving the space offered, and the area above suspended ceilings and engineering space in the same ventilation zone as the space offered. If no offers are received for such space the Government will consider space with thermal system insulation ACM (e.g., wrapped pipe or boiler lagging) which is not damaged or subject to damage by routine operations.

E9. OSHA Requirements:

The lessor shall provide space, services, equipment, and conditions that comply with Occupational Safety and Health Administration (OSHA) safety and Health standards (29 CFR 1910 and 1926).

E10. Radon Measurement and Corrective Action:

A. Radon levels in space leased to the Government shall not equal or exceed the Environmental Protection Agency (EPA) action level for homes of 4 picocuries per liter (PCI/L).

B. The portion of the space proposed for lease to the Government which is in ground contact or closest to the ground (i.e., if space offered is on floors 4 through 8, measurement is required for the 4th floor only) shall be measured by the offeror for radon and the results certified on the form provided with this solicitation for offers. Radon detectors shall be placed throughout the required area to ensure each detector covers no more than 2,000 square feet of space.

C. The radon certification shall be provided to the Contracting Officer as soon as possible but not later than the time for submission of best and final offers. If measurement reveals radon levels at or above 4 PCI/L, the offeror shall develop a plan of corrective action. The successful offeror shall implement the plan prior to occupancy by the Government.

D. If the space offered for lease to the Government is in a building under construction or proposed for construction, the Lessor shall perform the necessary radon testing and submit a certification to the Contracting Officer within 30 days after the test is completed, but no later than 150 days after the Government occupies the space. If measurement reveals radon levels exceeding 4 PCI/L, the Lessor shall develop and promptly implement a plan of corrective action.

E11. Standpipes:

Applies to space offered in a building of four or more stories.

Standpipes shall be provided when Government occupancy is four or more floors above grade and shall conform

to NFPA Standard No. 14.

E12. Indoor Air Quality:

A. The lessor shall control contaminants at the source and/or operate the space in such a manner that the indicator levels for carbon monoxide (CO), carbon dioxide (CO2), and formaldehyde (HCHO), are not exceeded. The indicator levels for office area are as follows: CO-9 parts per million (PPM) time weighted average (TWA - 8-hour sample); CO2 - 1,000 PPM (TWA); HCHO - 0.1 PPM (TWA).

B. The lessor shall promptly investigate indoor air quality (IAQ) complaints and shall implement controls including alteration of building operating procedures (e.g., adjusting air intakes, adjusting air distribution, cleaning and maintaining HVAC, etc.).

C. The Government is responsible for addressing IAQ problems resulting from its own activities.

E13. Sprinkler System - General Office Area:

The building shall, as required by Code, be equipped with automatic sprinklers which conform to NFPA No. 13, be maintained in accordance with NFPA No. 13A, have electrically supervised control valves (NFPA No. 13), and have water-flow alarm switches connected to automatically notify the local fire department (NFPA No. 72) or central station (NFPA No. 71). The notification of the fire department or central station shall be accomplished through the building fire alarm system.

Regardless of code requirements when the leased space (including garage areas under lease by the Government) is on the 6th floor and above, or below grade, sprinklers are required.

(THIS PAGE INTENTIONALLY LEFT BLANK)

(OPTIONAL)

Attachment No. _____ to Section D _____

OPERATING COSTS ESCALATOR CLAUSE

Beginning with the second year of the lease and each year after, FAA shall pay adjusted rent for changes in costs for cleaning services, supplies, materials, maintenance, trash removal, landscaping, water, sewer charges, heating, electricity, and certain administrative expenses attributable to occupancy.

The amount shall be determined by multiplying the total first year's estimated costs of these items, as negotiated and established prior to the lease award, by the percent of change in the cost of living index from the base figure. The base figure shall be the index figure published for the month prior to the lease commencement date. The percent change shall be computed by comparing the base figure with the index figure published for the month which begins each successive 12-month period. For example, a lease which commences in June of 1981 would have as the base figure the index published for May of 1981, and that figure would be compared with the index published for May of 1982, May of 1983, and so on, to determine the percent change. The cost of living index shall be measured by the U.S. Department of Labor Revised Consumer Price Index for Wage Earners and Clerical Workers, U.S. City Average, All Items figure, (1967 = 100) published by the Bureau of Labor Statistics. Payment shall be made with the monthly installment of fixed rent.

Rental adjustments shall be effective on the anniversary date of the lease. Payment of the adjusted rental rate shall become due on the first workday of the second month following the publication of the cost of living index for the month prior to the lease commencement date.

If FAA exercises an option to extend the lease term at the same rate as that of the original term, the option price shall be based on the adjustments during the original term. Annual adjustments will continue.

In the event of any decreases in the cost of living index occurring during the term of occupancy under the lease, the rental amount will be reduced accordingly. The amount of any such reductions will be determined in the same manner as increases in rent provided under this clause.

The base for the operating costs adjustment will be $_____.

ALTERNATE PARAGRAPH D2

NEGOTIATION AND DETERMINATION OF LOW OFFER
(Replaces Paragraph D2)

FAA will negotiate for the initial term and any renewal period. To determine the lowest offer, only price for the initial term will be considered. Offers will be reduced to an annual square foot rate. Price evaluation will be made on the basis of the annual per square foot cost, plus the estimated cost of escalation attributable to operating expenses if the offer includes the CPI escalator clause, plus the annualized cost of any items specified in these specifications which are not included in the rental. Excluded from the total square footage, but not from the annual rental, will be parking and wareyard areas. For different types of space, the composite rate will be determined by dividing the total annual rental by the total square footage minus these areas. In estimating escalation, a 4 percent factor, compounded annually, will be used. Price evaluation will also include the estimated cost of escalation of Government-provided services, not included as part of the rental consideration.

(THIS PAGE INTENTIONALLY LEFT BLANK)

GENERAL CLAUSES
(Acquisition of Leasehold Interests in Real Property)

1. The Government reserves the right, at any time after the lease is signed and during the term of the lease, to inspect the leased premises and all other areas of the building access to which is necessary to ensure a safe and healthy work environment for the Government tenants and the Lessor's performance under this lease.

2. If the building is partially or totally destroyed or damaged by fire or other casualty so that the leased space is untenantable as determined by the Government, the Government may terminate the lease upon 15 calendar days written notice to the Lessor and no further rental will be due.

3. The Lessor shall maintain the demised premises, including the building and all equipment, fixtures, and appurtenances furnished by the Lessor under this lease, in good repair and tenantable condition.

4. In the event the Lessor fails to perform any service, to provide any item, or meet any requirement of this lease, the Government may perform the service, provide the item, or meet the requirement, either directly or through a contract. The Government may deduct any costs incurred for the service or item, including administrative costs, from the rental payments.

5. 52.252-2 CLAUSES INCORPORATED BY REFERENCE (JUN 1988)

This contract incorporates one or more clauses by reference with the same force and effect as if they were given in full text. Upon request the Contracting Officer will make their full text available.

6. The following clauses and provisions are incorporated by reference:

FAR 52.203-1	OFFICIALS NOT TO BENEFIT (APR 1984)
GSAR 552-203-5	COVENANT AGAINST CONTINGENT FEES (FEB 1990)
FAR 52.203-7	ANTI-KICKBACK PROCEDURES (OCT 1988)
GSAR 552-203-73	PRICE ADJUSTMENT FOR ILLEGAL OR IMPROPER ACTIVITY (SEP 1990) (Applies to leases over $25,000)
FAR 52.215-1	EXAMINATION OF RECORDS BY COMPTROLLER GENERAL (APR 1984) (Applies to leases over $10,000)
FAR 52.219-8	UTILIZATION OF SMALL BUSINESS CONCERNS AND SMALL DISADVANTAGED BUSINESS CONCERNS (FEB 1990) (Applies to leases over $25,000)
FAR 52.219-9	SMALL BUSINESS AND SMALL DISADVANTAGED BUSINESS SUBCONTRACTING PLAN (JAN 1991) (Applies to leases over $500,000)
FAR 52.219-16	LIQUIDATED DAMAGES - SMALL BUSINESS SUBCONTRACTING PLAN (AUG 1989) (Applies to leases over $500,000)
FAR 52.222-18	NOTIFICATION OF EMPLOYEE RIGHTS CONCERNING PAYMENT OF UNIONDUES OR FEES (MAY 1992)
FAR 52.222-26	EQUAL OPPORTUNITY (APR 1984) (Applies to leases over $10,000)
FAR 52.222-35	AFFIRMATIVE ACTION FOR SPECIAL DISABLED AND VIETNAM ERA VETERANS (APR 1984) (Applies to leases over $10,000)
FAR 52.222-36	AFFIRMATIVE ACTION FOR HANDICAPPED WORKERS (APR 1984) (Applies to leases over $2,500)
FAR 52.222-37	EMPLOYMENT REPORTS ON SPECIAL DISABLED VETERANS AND VETERANS OF THE VIETNAM ERA (JAN 1988) (Applies to leases over $10,000)
GSAR 552.232-7 i	PROMPT PAYMENT (APR 1989)

FAR 52.233-1 DISPUTES (DEC 1991)

THE FOLLOWING APPLY WHEN COST OR PRICING DATA IS SUBMITTED:

FAR 52.215-22 PRICE REDUCTION FOR DEFECTIVE COST OR PRICING DATA (JAN 1991) (Applies when cost or pricing data is required for work or services exceeding $100,000)

FAR 52.215-24 SUBCONTRACTOR COST OR PRICING DATA (DEC 1991) (Applies when the clause 52.215-22 is applicable)

REPRESENTATIONS AND CERTIFICATIONS (Temporary and Small Acquisitions of Leasehold Interests in Real Property)	Solicitation Number	Dated

Complete appropriate boxes, sign the form, and attach to offer.

The Offeror makes the following Representations and Certifications. NOTE: The "Offeror," as used on this form, is the owner of the property offered, not an individual or agent representing the owner.

1. **SMALL BUSINESS REPRESENTATION**

The Offeror represents and certifies as part of its offer that --

(a) It [ ] is, [ ] is not a small business. "Small" means a concern and its affiliates that is independently owned, is not dominant in the field of operation, and has annual average gross receipts of $10 million or less for the preceding three fiscal years.

(b) It [ ] is, [ ] is not a small disadvantaged business. (See 48 CFR 52.219-2 for definitions.)

(c) It [ ] is, [ ] is not a women-owned small business. (See 48 CFR 52.219-3 for definitions.)

2. 52.222-22 - **PREVIOUS CONTRACTS AND COMPLIANCE REPORTS (APR 1984)**

(Applies to leases which exceed $10,000.)

The Offeror represents that --

(a) It [ ] has, [ ] has not participated in a previous contract or subcontract subject either to the Equal Opportunity clause of this solicitation, the clause originally contained in Section 310 of Executive Order No. 10925, or the clause contained in Section 201 of Executive Order No. 11114;

(b) It [ ] has, [ ] has not filed all required compliance reports; and

(c) Representations indicating submission of required compliance reports, signed by proposed subcontractors, will be obtained before subcontract awards. (Approved by OMB under Control Number 1215-0072.)

3. 52.222-25 - AFFIRMATIVE ACTION COMPLIANCE (APR 1984)

(Applies to leases which exceed $10,000.)

(Applies to contracts which include the clause at FAR 52.222-26, Equal Opportunity.)

The Offeror represents that --

(a) It [ ] has developed and has on file, [ ] has not developed and does not have on file, at each establishment affirmative action programs required by the rules and regulations of the Secretary of Labor (41 CFR 60-1 and 60-2), or

(b) It [ ] has not previously had contracts subject to the written affirmative action programs requirement of the rules and regulations of the Secretary of Labor. (Approved by OMB under Control Number 1215-0072.)

4. 52.222-21 - CERTIFICATION OF NONSEGREGATED FACILITIES (APR 1984)

(Applies to leases which exceed $10,000.)

(a) "Segregated facilities," as used in this provision, means any waiting rooms, work areas, rest rooms and wash rooms, restaurants and other eating areas, time clocks, locker rooms and other storage or dressing areas, parking lots, drinking fountains, recreation or entertainment areas, transportation, and housing facilities provided for employees, that are segregated by explicit directive or are in fact segregated on the basis of race, color, religion, or national origin because of habit, local custom, or otherwise.

(b) By the submission of this offer, the Offeror certifies that it does not and will not maintain or provide for its employees any segregated facilities at any of its establishments, and that it does not and will not permit its employees to perform their services at any location under its control where segregated facilities are maintained. The Offeror agrees that a breach of this certification is a violation of the Equal Opportunity clause in the contract.

(c) The Offeror further agrees that (except where it has obtained identical certifications from proposed subcontractors for specific time periods) it will--

(1) Obtain identical certifications from proposed subcontractors before the award of subcontracts under which the subcontractor will be subject to the Equal Opportunity clause;
(2) Retain the certifications in the files; and
(3) Forward the following notice to the proposed subcontractors (except if the proposed subcontractors have submitted identical certifications for specific time periods).

NOTICE TO PROSPECTIVE SUBCONTRACTORS OF REQUIREMENT FOR CERTIFICATIONS OF NONSEGREGATED FACILITIES.

A Certification of Nonsegregated Facilities must be submitted before the award of a subcontract under which the subcontractor will be subject to the Equal Opportunity clause. The certification may be submitted either for each subcontract or for all subcontracts during a period (i.e., quarterly, semiannually, or annually).

NOTE: The penalty for making false statements in offers is prescribed in 18 U.S.C. 1001.
(Approved by OMB under Control Number 1215-0072.)

5. 52.203-11 CERTIFICATION AND DISCLOSURE REGARDING PAYMENTS TO INFLUENCE CERTAIN FEDERAL TRANSACTIONS (APR 1991) (DEVIATION)

(Applies to leases which exceed $100,000.)

(a) The definitions and prohibitions contained in the clause, at FAR 52.203-12, Limitation on Payments to Influence Certain Federal Transactions, are hereby incorporated by reference in paragraph (b) of this certification.

(b) The offeror, by signing its offer, hereby certifies to the best of his or her knowledge and belief that on or after December 23, 1989, –

(1) No Federal appropriated funds have been paid or will be paid to any person for influencing or attempting to influence an officer or employee of any agency, a Member of Congress, an officer or employee of Congress, or an employee of a Member of Congress on his or her behalf in connection with the awarding of a contract resulting from this solicitation.
(2) If any funds other than Federal appropriated funds (including profit or fee received under a covered Federal transaction) have been paid, or will be paid, to any person for influencing or attempting to influence an officer or employee of any agency, a Member of Congress, an officer or employee of Congress, or an employee of a Member of Congress on his or her behalf in connection with this solicitation, the offeror shall complete and submit, with its offer, OMB standard form LLL, Disclosure of Lobbying Activities, to the Contracting Officer; and
(3) He or she will include the language of this certification in all subcontract awards at any tier and require that all recipients of subcontract awards in excess of $100,000 shall certify and disclose accordingly.

(c) Submission of this certification and disclosure is a prerequisite for making or entering into this contract imposed by section 1352, title 31, United States Code. Any person who makes an expenditure prohibited under this provision or who fails to file or amend the disclosure form to be filed or amended by this provision, shall be subject to a civil penalty of not less than $10,000, and not more than $100,000, for each such failure.

6. 52.223-5 - CERTIFICATION REGARDING A DRUG-FREE WORKPLACE (JUL 1990)

(a) Definitions. As used in this provision, "Controlled substance" means a controlled substance in schedules I through V of section 202 of the Controlled Substances Act (21 U.S.C. 812) and as further defined in regulation at 21 CFR 1308.11-1308.15.

"Conviction" means a finding of guilt (including a plea of nolo contendere) or imposition of sentence, or both, by any judicial body charged with the responsibility to determine violations of the Federal or State criminal drug statutes.

"Criminal drug statutes" means a Federal or non-Federal criminal statute involving the manufacture, distribution, dispensing, possession or use of any controlled substance.

"Drug-free workplace" means the site(s) for the performance of work done by the Contractor in connection with a specific contract at which employees of the Contractor are prohibited from engaging in the unlawful manufacture, distribution, dispensing, possession, or use of a controlled substance.

"Employee" means an employee of a Contractor directly engaged in the performance of work under a Government contract. Directly engaged is defined to include all direct cost employees and any other Contractor employee who has other than a minimal impact or involvement in contract performance.

"Individual" means an Offeror/contractor that has no more than one employee including the Offeror/contractor.

(b) By submission of its offer, the Offeror, if other than an individual, who is making an offer that equals or exceeds $25,000, certifies and agrees that, with respect to all employees of the Offeror to be employed under a contract resulting from this solicitation, that, no later than 30 calendar days after contract award (unless a longer period is agreed to in writing), for contracts of 30 calendar days or more performance duration, or as soon as possible, for contracts of less than 30 calendar days performance duration, but in any case, by a date prior to when performance is expected to be completed, it will -

(1) Publish a statement notifying its employees that the unlawful manufacture, distribution, dispensing, possession, or use of a controlled substance is prohibited in the contractor's workplace and specifying the actions that will be taken against employees for violations of such prohibition;
(2) Establish an ongoing drug-free awareness program to inform such employees about -

(i)The dangers of drug abuse in the workplace;
(ii)The contractor's policy of maintaining drug-free workplace;
(iii)Any available drug counseling, rehabilitation, and employee assistance programs; and
(iv)The penalties that may be imposed upon employees for drug abuse violations occurring in the workplace.

(3)Provide all employees engaged in performance of the contract with a copy of a statement required by subparagraph (b)(1) of this clause;

(4)Notify such employees in writing in the statement required by subparagraph (b)(1) of this provision that, as a condition of continued employment on the contract resulting from this solicitation, the employee will -

(i)Abide by the terms of the statement; and
(ii)Notify the employer in writing of the employee's conviction under a criminal drug statute for a violation occurring in the workplace no later than 5 calendar days after such conviction;

(5) Notify the contracting officer in writing within 10 calendar days after receiving notice under subdivision (b)(4)(ii) of this provision, from an employee or otherwise receiving actual notice of such conviction. The notice shall include the position and title of the employee; and

(6) Within 30 calendar days after receiving notice under subdivision (b)(4)(ii) of this provision of a conviction, take one of the following actions with respect to any employee who is convicted of a drug abuse violation occurring in the workplace:

(i)Taking appropriate personnel action against such employee, up to and including termination; or
(ii)Require such employee to satisfactorily participate in a drug abuse assistance or rehabilitation program approved for such purposes by a Federal, State, or local health law enforcement, or other appropriate agency.

(7)Make a good faith effort to maintain a drug-free workplace through implementation of subparagraph (b)(1) through (b)(6) of this clause.

(c)By submission of its offer, the Offeror, if an individual who is making an offer of any dollar value, certifies and agrees that the Offeror will not engage in the unlawful manufacture, distribution, dispensing, possession, or use of a controlled substance in the performance of this contract resulting from this solicitation.

(d)Failure of the Offeror to provide the certification required by paragraph (b) or (c) of this provision, renders the Offeror unqualified and ineligible for award. (See FAR 9.104-1(g) and 19.602-1(a)(2)(i).)

(e)In addition to other remedies available to the Government, the certification in paragraphs (b) or (c) of this provision concerns a matter within the jurisdiction of an agency of the United States and the making of a false, fictitious, or fraudulent certification may render the maker subject to prosecution under Title 18, United States Code, Section 1001.

7. 52.204-3 TAXPAYER IDENTIFICATION (SEP 1989) (VARIATION)

(a) The Offeror is required to submit taxpayer identification information in order to comply with reporting requirements of 26 U.S.C. 6041, 6041A, and 6050M and implementing regulations issued by the Internal Revenue Service (IRS). Failure or refusal by the Offeror to furnish the information may result in a 20 percent reduction of payments otherwise due under the contract. Taxpayer information on the payee, if different from the offeror, is also required; however, it may be provided at the time of award.

(b) Offeror's Taxpayer Identification Number (TIN).

[ ] TIN:_____. [ ] TIN has been applied for. [ ] TIN is not required.

(c) Corporate Status.

[ ] Corporation; [ ] Not a corporate entity; [ ] Sole proprietorship [ ] Partnership

(d) Common Parent.

"Common parent," as used in this solicitation provision, means that corporate entity that owns or controls an affiliated group of corporations that files its Federal income tax returns on a consolidated basis, and of which the Offeror is a member.

[ ] Offeror is not owned or controlled by a common parent.
[ ] Name and TIN of common parent: Name_____ TIN_____

(e) Payee's Taxpayer Identification Number.

[ ] TIN:_____. [ ] TIN has been applied for. [ ] TIN is not required.

8. OFFEROR'S CONTRACTOR ESTABLISHMENT CODE (MAR 1992) (enter number, if known): _____

	Name and Address (Including ZIP Code)	Telephone No.
OFFEROR OR AUTHORIZED REPRESENTATIVE	Signature	Date

(THIS PAGE INTENTIONALLY LEFT BLANK)

SAFETY AND ENVIRONMENTAL MANAGEMENT
PRELEASE CERTIFICATION CHECKLIST

Building Name:_____

Street Address:_____

City:_____, State:_____Zip Code:_____

INSTRUCTIONS: Complete the following information that applies to the building being offered for lease by the Government. If building is not yet constructed, complete based on building plans and specifications.

The following information applies to: ☐ an existing building ☐ a building planned for construction
(CHECK ONE)

Building structural support (check one):
_____ Combustible (timber, wood, etc.)
_____ Noncombustible (concrete, steel, masonry, etc.)

Other types of uses present in the building (check all that apply):
_____ Restaurants
_____ Laboratories
_____ Storage
_____ Retail
_____ Other, list _____

Vertical openings between two or more floors:
Stairs (check one): _____ open _____ enclosed with doors
Shafts (check one): _____ open _____ enclosed; describe_____
Other (check one) : _____ open _____ enclosed; describe_____
None: _____

Sprinklers (check one):
_____ None
_____ Corridors only
_____ All but corridors and lobbies
_____ Total building
_____ Other; describe locations:_____

Fire fighting capability (check one):
_____ None
_____ Fire extinguishers only
_____ Standpipes only
_____ Standpipes and fire extinguishers

Fire alarm (check one):
_____ None
_____ Building alarm without automatic fire department notification
_____ Building alarm with automatic fire department notification

Smoke detectors (check one):
_____ None
_____ All corridors
_____ Total building
_____ Other; describe locations:_____

Wall interior finish in space being offered for lease (check one):
_____ Painted walls of plaster, sheetrock, or masonry
_____ Wallpaper or vinyl wall covering
_____ Cloth or corkboard
_____ Hardwood paneling
_____ Other; describe:_____

Floor finish in space being offered for lease (check one):
_____ Carpet
_____ Tile
_____ Concrete
_____ Hardwood
_____ Other, describe:_____

GSA Form (3/91) Page 1

SAFETY AND ENVIRONMENTAL MANAGEMENT - PRELEASE CERTIFICATION CHECKLIST

Building size and layout
Approximate outside dimensions of building:_____
Total gross area of building:_____ square feet
Area of proposed lease:_____ square feet
Total number of floors in building:_____ Floor(s) of proposed lease:_____
Describe building layout, e.g., rectangular, E-shaped, U-shaped, etc.:_____
Exits (check one):
_____ No stairway; one floor on grade
_____ Stairways as described in the table below (Place checks in appropriate boxes except for "Distance to Next Stair" column which should contain a number, measured in feet, indicating the required walking distance to the next exit stair.):

Which Stair	Stairway Enclosure		Location of Exit Discharge		Distance to Next Stair (in feet)
	Open	Separated by Doors	Inside Building	Directly to Outside	
Example	X		X		120
No. 1					
No. 2					
No. 3					
No. 4					

The example represents an open stair (no doors) which discharges inside the building (perhaps into a lobby). A person must walk approximately 120 feet to reach the next exit stair. **Note:** fire escapes and ladders must not be counted as exit stairs.

Additional information on exits, if any, e.g., sketch of building:

Asbestos. The building has *(check all that apply)*:
_____ No asbestos
_____ Asbestos fire proofing or surfacing material
_____ Undamaged asbestos floor tile
_____ Asbestos pipe or boiler insulation in good condition
_____ Other undamaged asbestos; describe:_____
_____ Damaged asbestos, describe:_____
_____ Don't know

This information provided by the offeror on this form is material facts upon which the Government relies in making an award. The Government has the right to require remedy if there is a misrepresentation. The Owner or Authorized Representative certifies that all features are in operating order and properly maintained.

OWNER or AUTHORIZED REPRESENTATIVE	a. TYPED NAME AND ADDRESS (including ZIP code)	b. Telephone No. (including area code)
	c. SIGNATURE	d. Date Signed

FORM APPROVED OMB NUMBER 3090-0086

PROPOSAL TO LEASE SPACE	IN RESPONSE TO SOLICITATION NUMBER ▶	DATED

The offeror agrees upon acceptance of this proposal by the date specified, to lease to the United States of America, the premises as described and upon the terms specified, in compliance with and subject to the provisions of above Solicitation, with attachments.

SECTION I – PREMISES DESCRIPTION

1. BUILDING NAME AND ADDRESS (Including ZIP code)	6. NET USABLE SPACE IN ENTIRE BUILDING	
	a. OFFICE Sq. ft.	b. STORAGE Sq. ft.
	c. OTHER (Specify type and number of square feet)	
2. NUMBER OF FLOORS / 3. TYPE OF CONSTRUCTION		
4. LIVE FLOOR LOAD CAPACITY (lbs./sq. ft.) / 5. BUILDING AGE years		

SECTION II – SPACE OFFERED AND RATE

TYPE OF SPACE	NET USABLE SPACE (Square Feet) (a)	INITIAL TERM		RENEWAL TERM	
		SQUARE FOOT RATE PER YEAR (b)	AMOUNT (Col. (a)x(b)) (c)	SQUARE FOOT RATE PER YEAR (d)	AMOUNT (Col. (a)x(d)) (e)
7. Office		$	$	$	$
8. Storage					
9. Special					
10. TOTAL			$		$
11. COMPOSITE SQUARE FOOT RATE PER ANNUM		a. Item 10, Col. (c) / Item 10, Col. (a) =	$	b. Item 10, Col. (e) / Item 10, Col. (a) =	$

12. Space will be altered in accordance with specifications and ready for occupancy (Date) ▶

13. PARKING	
	a. Number of parking spaces for the entire building which are under control of offeror
	b. Number of parking spaces to be furnished for use by Government employees
	c. If the parking spaces shown, in item 13b above, are provided because of local law or regulation requirements, and no charge for parking is intended — Mark here → ☐
	d. If there is to be a charge for Government employees' parking, show the amount that will be charged for each parking place — $

SECTION III – LEASE TERMS / ALTERNATES

14. INITIAL LEASE			15. RENEWAL OPTIONS		18. THE REQUEST STATES A MINIMUM PERIOD FOR ACCEPTANCE BY THE GOVERNMENT
a. NO. OF YEARS	b. FROM (Date)	c. TO (Date)	a. YEARS EACH	b. NUMBER OF OPTIONS	
16. NUMBER OF DAYS NOTICE REQUIRED TO RENEW LEASE			17. NUMBER OF DAYS NOTICE REQUIRED TO TERMINATE LEASE		GOOD UNTIL ▶

19. ALTERNATES

(If additional space is required continue in item 20 on back)

20 ADDITIONAL REMARKS OR CONDITIONS WITH RESPECT TO THIS OFFER

21. LIST ATTACHMENTS SUBMITTED WITH THIS OFFER (See solicitation requirements for plans, narratives, and other attachments)	22. The undersigned offeror acknowledges receipt of addenda to the Solicitation, if any, listed below:	
	a. ADDENDUM NO.	b. DATE RECEIVED

SECTION IV – OWNER IDENTIFICATION

23. RECORDED OWNER (Name and address, including number, street, city, State, and ZIP code)	24. OFFEROR OPERATES AS ☐ INDIVIDUAL ☐ PARTNERSHIP ☐ CORPORATION (Specify State) 25. OFFEROR'S INTEREST IN PROPERTY ☐ OWNER ☐ AGENT ☐ OTHER (Specify): 26 EMPLOYER'S IDENTIFICATION NO. OR SOCIAL SECURITY NUMBER ▶

27. OFFEROR	a. TYPED NAME AND ADDRESS (Include ZIP code)	b. TELEPHONE NO. (Include area code)
	c SIGNATURE	d DATE SIGNED

GSA FORM 1364 BACK (REV 11-87)

LESSOR'S ANNUAL COST STATEMENT	1. LEASE OR BID INVITATION NO.		2. STATEMENT DATE
	3. NET RENTABLE AREA (sq ft)	3a. Entire building	3b. Leased by Gov't
4. BUILDING NAME AND ADDRESS *(No., street, ctiy, state, and zip code)*			

SECTION I - ESTIMATED ANNUAL COST OF SERVICES AND UTILITIES FURNISHED BY LESSOR AS PART OF RENTAL CONSIDERATION

SERVICES AND UTILITIES	LESSOR'S ANNUAL COST FOR (a) Entire building	(b) Gov't leased area	FOR GOV'T USE ONLY
A. CLEANING, JANITOR, AND/OR CHAR SERVICE 5. Salaries			
6. Supplies *(Wax,cleansers,cloths,etc.)*			
7. Contract Services *(Window washing, waste,snow removal)*			
B. HEATING 8. Salaries			
9. Fuel (X one) oil gas coal electric			
10. System Maintenance & Repair			
C. ELECTRICAL 11. Current for ALL Power			
12. Replacement of Bulbs			
13. Power for Special Equipment			
14. System Maintenance and Repair			
D. PLUMBING 15. Water *(for all purposes) (include sewage charges)*			
16. Supplies *(Soap, towels, tissues not in 6 above)*			
17. System Maintenance and Repair			
E. AIR CONDITIONING 18. Utilities *(include electricity, if not in C11)*			
19. System Maintenance & Repair			

form 1217 (front)

F. ELEVATORS 20. Salaries *(operators, starters, etc.)*			
21. System Maintenance and Repair			
G. MISCELLANEOUS *(if not included above)* 22. Building Engineer and/or Manager			
23. Security *(Watchmen,guards,not janitors)*			
24. Social Security Tax & Workmen's Compensation Insurance			
25. Lawn & Landscaping Maintenance			
26. Other *(Explain on separate sheet)*			
27. TOTAL	$	$	$
SECTION II - ESTIMATED ANNUAL COSTS OF OWNERSHIP EXCLUSIVE OF CAPITAL CHARGES			
28. Real Estate Taxes			
29. Insurance *(hazard,liability, etc.)*			
30. Building Maintenance & Reserves for Replacements			
31. Management			
32. TOTAL	$	$	$

LESSOR'S CERTIFICATION-The amounts entered in Columns (a) & (b) represent my best estimate as to the annual costs of services,utilities & ownership.	33. Signature of Owner Legal Agent

SECTION III - APPROVAL OF STATEMENT BY AUTHORIZED GOVERNMENT REPRESENTATIVES

The undersigned certify that the amount shown in Item 27c represents the reasonable value of the services and utilities which amount may be properly deducted in determining net rent for the purposes of the Economy Act.

TYPED NAME AND TITLE	SIGNATURE	DATE
34A.	34B.	34C.
35A.	35B.	35C.

STANDARD FORM 2
FEBRUARY 1965 EDITION
GENERAL SERVICES
ADMINISTRATION
FPR (41 CFR) 1-16.601

U.S. GOVERNMENT
LEASE FOR REAL PROPERTY

DATE OF LEASE	LEASE NO.

THIS LEASE, made and entered into this date by and between

whose address is

and whose interest in the property hereinafter described is that of

hereinafter called the Lessor, and the UNITED STATES OF AMERICA, hereinafter called the Government:

WITNESSETH: The parties hereto for the considerations hereinafter mentioned, covenant and agree as follows:

1. The Lessor hereby leases to the Government the following described premises:

to be used for

2. TO HAVE AND TO HOLD the said premises with their appurtenances for the term beginning on

..... through ....., subject to termination and renewal rights as may be hereinafter set forth.

3. The Government shall pay the Lessor annual rent of $.....

at the rate of $..... per ..... in arrears. Rent for a lesser period shall be prorated. Rent checks shall be made payable to:

4. The Government may terminate this lease at any time by giving at least ..... days' notice in writing to the Lessor and no rental shall accrue after the effective date of termination. Said notice shall be computed commencing with the day after the date of mailing.

5. This lease may be renewed at the option of the Government, for the following terms and at the following rentals:

provided notice be given in writing to the Lessor at least ..... days before the end of the original lease term or any renewal term; all other terms and conditions of this lease shall remain the same during any renewal term. Said notice shall be computed commencing with the day after the date of mailing.

2-106

6. The Lessor shall furnish to the Government, as part of the rental consideration, the following:

7. The following are attached and made a part hereof:
The General Provisions and Instructions (Standard Form 2-A, ... edition).

8. The following changes were made in this lease prior to its execution:

IN WITNESS WHEREOF, the parties hereto have hereunto subscribed their names as of the date first above written.

LESSOR

BY ..... (Signature) ..... (Signature)

IN PRESENCE OF:

..... (Signature) ..... (Address)

UNITED STATES OF AMERICA

BY ..... (Signature) ..... (Official title)

STANDARD FORM 2
FEBRUARY 1965 EDITION

MARKET SURVEY DATE: _____

I. REQUIREMENTS.

A. Delineated Area: _____

_____

B. Agency Client: _____

_____

C. Net Usable Square Feet Required: _____

D. Special Requirements (if any):

_____

_____

_____

E. Selection factors other than price (if applicable)

_____

_____

_____

II. BUILDING SURVEYED.

A. Building Name and Location:

B. Owner/Agent Name
Address

Telephone Number: ( ) _____

C. Space Available

Floor	Amount (S.F.)
_____	_____

D. Neighborhood Description:

_____

_____

_____

SURVEY FINDINGS

III. PRICE AND TERMS

A. Asking Price:

1. Rent $_____ per month
or $_____ per square foot.
Indicate measurement used for quoted price
_____

2. Services Included in Rent:
Full_____; Partial_____
(If partial, state what is excluded)

3. Tenant Improvements included in Rent:

Place Photograph Here

B. Comments: _____

_____

IV. DECISION TO CONSIDER FOR NEGOTIATION

A. _____ WILL consider this building for negotiation. It meets or is capable of meeting the requirements of the client agency.

_____ WILL NOT consider this building for negotiation. It does not meet and is not capable of meeting the requirements of the client agency for the following reasons:

_____

B. The client agency representative present on the market survey
_____ Agrees with the above decision. _____ Does not agree with the decision because:

_____

C. Signature_____ Title/Agency Rep_____ Date_____

Signature_____ Title/GSA Rep_____ Date_____

GENERAL SERVICES ADMINISTRATION (8/91)

V. BUILDING DESCRIPTION

A. General Appearance: New_____ Older, well-maintained_____ Older, poorly-maintained_____

B. Transportation Access:
Parking Available on Site: Yes No
Public Parking in Vicinity: Yes No
Served by Public Transit: Yes No

C. Interior Finishes and Mechanical/Electrical Systems:

1. Interior Walls	a. Type: ____Drywall ____Plaster ____Other:_____ b. Covering in Area Offered: Acceptable	Yes	No
2. Lighting	a. Adequate in public areas b. Adequate in work areas	Yes Yes	No No
3. Ceiling	a. Uniform Height (8' to 11') b. Suspended c. Finish ____Acoustical ____Tile ____Plaster ____Other:_____	Yes Yes	No No
4. Windows	a. In Space Offered: ____Fixed ____Can be opened b. Covering: ____Blinds ____Drapes ____Other (specify)		
5. Floor Covering	a. Type: ____Carpet ____Vinyl ____Other b. Existing is acceptable for occupancy.	Yes	No
6. Toilets	a. Separate facilities for men and women on floor offered	Yes	No
7. Elevators	a. ____Passenger ____Freight b. Current Certificate of Inspection	Yes	No
8. Heating	a. Type: ____Central ____Individual Units b. Fuel: ____Oil ____Electric ____Gas ____Other:_____		
9. Air Conditioning	a. Type: ____Central ____Individual Window Units		
10. Accessible to Handicapped	a. Route to and within the building b. Entrance and elevators c. Offered area, drinking fountains and restrooms	Yes Yes Yes	No No No

D. Comments:

ACTION SUMMARY LEASE NUMBER:_____

A. REQUIREMENT

1. Agency :_____ Name of Representive:_____
   Telephone No.:_____ Title of Representative:_____
2. Requirement_____NUSF (Range) Type:___Office; ___Warehouse; ___Other
3. General Delineated Area:_____
   _____
4. Occupancy Date Required:_____.
5. Date GSA Was Notified:_____. Telephone Call___; Letter___; Other_____
6. Reimbursable Work Authorization: ___Not Required ___In File.
7. SF-81 in File: Yes No

B. RATIONALE FOR AWARD

1. Award is made to Location #_____.

2. Reasons for Award

☐ a. Lowest price acceptable offer. Price is considered reasonable based upon the following: (Include market comparables and other data, if available)

_____
_____
_____

☐ b. Offer represents the greatest value to the Government, price and other factors considered.
Discussion:

_____
_____
_____
_____

C. ACCEPTANCE FOR OCCUPANCY

Date:_____ By:_____(Name) _____(Title)

D. MARKET SURVEY AND NEGOTIATIONS

Location #1

a. Address and Location of Offered Space:

b. Location Identified From: ____In-House File; ___Real EstateTrade Publication Advertisement
____Other (Specify)_____
c. Name of Party Contacted and Affiliation with Owner:_____
d. Date First Contacted:_____. _____Telephone; _____Site Visit
e. Space is Available: Yes No
f. Date of On-Site Inspection with Owner or Representative:_____
Attendees:_____
g. Summary of Discussion Points (Requirements, Deficiencies, etc.)

_____
_____
_____
_____

h. Consider for Negotiation: Yes No
i. Offer Submitted: Yes No
j. Negotiated Results (Final Offer)_____

_____
_____
_____
_____
_____

ACTION SUMMARY LEASE NUMBER:_____

D. MARKET SURVEY AND NEGOTIATIONS (Continuation Page for GSA Form 3628)
(Duplicate this page if more than 3 locations were considered.) Page ____ of ____

Location #____

a. Address and Location of Offered Space:

b. Location Identified From: ____In-House File; ___Real EstateTrade Publication Advertisement
____Other (Specify)_____

c. Name of Party Contacted and Affiliation with Owner:_____

d. Date First Contacted:_____. _____Telephone; _____Site Visit

e. Space is Available: Yes No

f. Date of On-Site Inspection with Owner or Representative:_____
Attendees:_____

g. Summary of Discussion Points (Requirements, Deficiencies, etc.)

h. Consider for Negotiation: Yes No

i. Offer Submitted: Yes No

j. Negotiated Results (Final Offer)_____

Location #____

a. Address and Location of Offered Space:

b. Location Identified From: ____In-House File; ___Real EstateTrade Publication Advertisement
____Other (Specify)_____

c. Name of Party Contacted and Affiliation with Owner:_____

d. Date First Contacted:_____. _____Telephone; _____Site Visit

e. Space is Available: Yes No

f. Date of On-Site Inspection with Owner or Representative:_____
Attendees:_____

g. Summary of Discussion Points (Requirements, Deficiencies, etc.)

h. Consider for Negotiation: Yes No

i. Offer Submitted: Yes No

j. Negotiated Results (Final Offer)_____

APPROVAL:

Name of Contracting Officer	Signature	Date

General Services Administration 8/91

APPENDIX 4. PROJECT MANAGEMENT INFORMATION, SAMPLE WORK STATION PROTOTYPICALS AND FLOOR PLANS FOR OFFICE LAYOUT - SYSTEMS FURNITURE INSTALLATION

This appendix provides samples of system furniture and conventional furniture space layouts, and prototypicals of systems furniture workstations. The information is not intended for standard application; only for information.

HOW TO BEGIN

The field office manager should contact the regional Flight Standards Division to request authority to begin acquisition of systems furniture. The -210 branch will prepare the procurement request and send it to the regional Logistics Division. The procurement and real estate branches will be involved in the action. Only the Logistics Division has authority to contract with vendors. Requests for layout plans or bids should only be made through the Logistics Division. The -210 branch is the division manager's representative and must be kept apprised of all activities. The procurement branch will provide the names of GSA Federal Supply Schedule vendors along with unit cost information. Arrangements can be made for meetings with the vendors to inspect various types of workstations.

DEFINE YOUR REQUIREMENTS

When determining the requirements for system furniture, the number of people and types of positions need to be considered based on the authorized staffing for the office. If there are planned changes in the near future, these changes should be taken into consideration. In most offices there will be three to four typical workstation plans (prototypicals) used to plan your requirements. During this planning, consideration should be given for electrical requirements for computers, floor plan wiring, the LAN systems, and other office-specific requirements. To the extent possible each work station should be designed to support the individual employee's work function; e.g., telephones, keyboard trays, visitor chairs, bookshelves, file doors, security, work area, lights, and electric service.

BARGAINING UNIT COORDINATION

Systems furniture is most certainly a condition of employment for our workforce, therefore, the bargaining unit must be involved. The local office PASS representative must be involved early in the planning stages. Employees must be given significant input into decisions such as size, shape, design, color, and functional requirements. The office manager must negotiate final decisions with the PASS representative.

OPTIONS

There are three methods to acquire systems furniture: purchase, lease, and lease with option to purchase, the selection of which is based on funding availability.

A straight lease is not cost effective and therefore is not advisable. A lump sum purchase may not be possible; a lease with option acquisition may be manageable. There is a requirement to give UNICOR (Prison Industries) **first consideration** for straight purchase - UNICOR will not enter into lease contracts. Most GSA Federal Supply Schedule vendors will lease-purchase, including an option for early buyout in 3 or 5 year contracts. Buyout would be considered annually during budget formulation. Use the most effective and economical method available to you.

PROCUREMENT REQUESTS

Procurement requests (PR) shall be submitted to the Logistics Division through the regional -210 branch (via the SAM system). PRs must be in sufficient detail to allow the contracting officer to develop a purchase order that meets all technical rquirements. PRs should specify the type of workstations required (manager, supervisor, ASI, clerical, administrative officer, computer specialist, etc.) and the estimated unit cost per station. Also, include an office floor plan with the PR if available.

LAYOUT PLANNING

After the procurement activity has been completed, the office manager (and staff) will work closely with the contractor to develop the floor plans for the office. This phase of the activity is very important to the success of the project.

A good layout will consider:

Organizational design of the office (work flow planning). How does the office work? Who reports to whom? Who works closely with whom? Most effective location of shared areas?

Office equipment - What is each employee expected to need at the workstation? What equipment is shared? Shared by whom? Incorporate some listings of office equipment requirements.

HVAC, lighting, utilities, circulation space - Installation must meet all building management codes: local, OSHA, GSA. Determine that electrical environment will support equipment. Consider LAN system equipment needs.

Existing furnishings - When redesigning an existing facility, planning must also include the disposition of existing furnishings. What will remain? How will it fit? What to do with the rest?

Movement of existing equipment - consider a separate contract for movement of computers and other sensitive equipment to relieve the liability on the employee.

DELIVERY AND INSTALLATION AGREEMENTS

Planning and timing are most important to delivery and installation activity. Well in advance of delivery, managers need to consider the physical space available - size of doors, elevators, stairways and size of all furniture. On the day of delivery, the installers or a representative should be on sight to accept delivery and inventory the shipment. Matters of trash removal and cleanup should be the installer's responsibility. An agreement should be made for the installer to return within 30 days to fix any item that needs repair. Administrative officers need to insure that inventory and bar code requirements are accomplished. Consideration should be given to an annual maintenance agreement to repair or redesign the furniture.

DISPOSAL OF OLD FURNITURE

Disposing of the old furniture can be a major problem if proper preparations are not made. You should coordinate with the regional Logistics Division Property Management Section through the Flight Standards -210 branch. The furniture and equipment that will be disposed of must be inventoried. (Refer to Order 4650.21B, Management and Control of In-Use Personal Property.) Scheduling of any removal must coincide with delivery and installation of the systems furniture. The old furniture may have to be stored, picked up by another FAA facility, or delivered somewhere. Each situation is different and once again the burden may fall upon the local office manager to ensure it is done. Phone, word of mouth, and E-mail are ways to advertise used furniture and equipment. Excess property reports can be completed which would make the items available to other Government agencies. The office manager remains liable for the property and the proper tracking of all property.

PREPARATION OF SPACE

When the site is ready for the installation, it is recommended that one last check of the space against the layout plan be accomplished to ensure that the space is totally compatible; e.g., check windows, doors, carpet, lighting fixtures, and phone, electrical, and computer wiring. Rearranging workstations and office equipment

can lead to electrical problems if certain circuits are overloaded. The office manager is responsible for coordinating dates, times, and schedules of the invidual contractors.

Figure 1. Sample Floor Plan - Conventional Furniture Layout

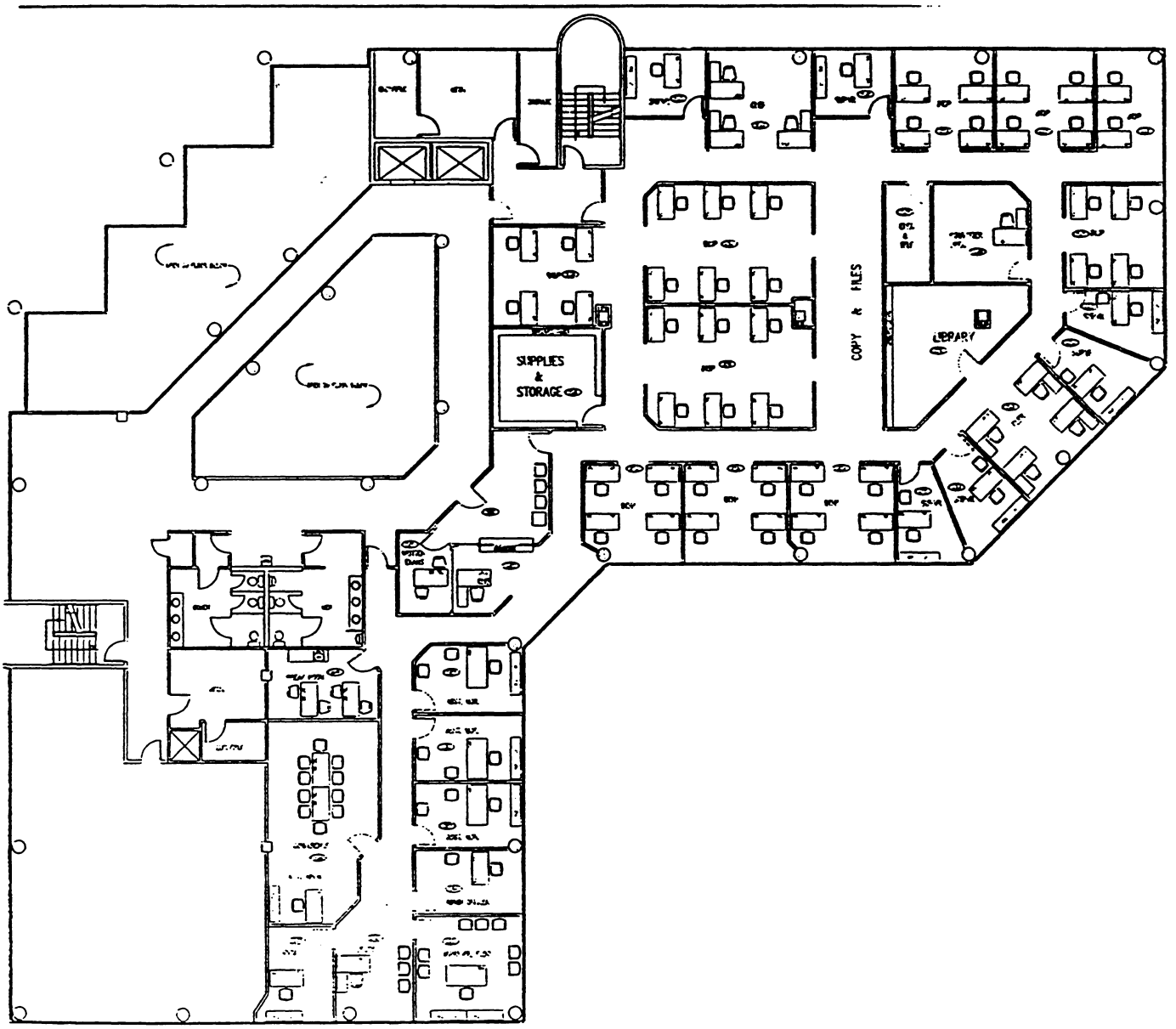

Figure 2. Sample Floor Plan - Systems Furniture Layout

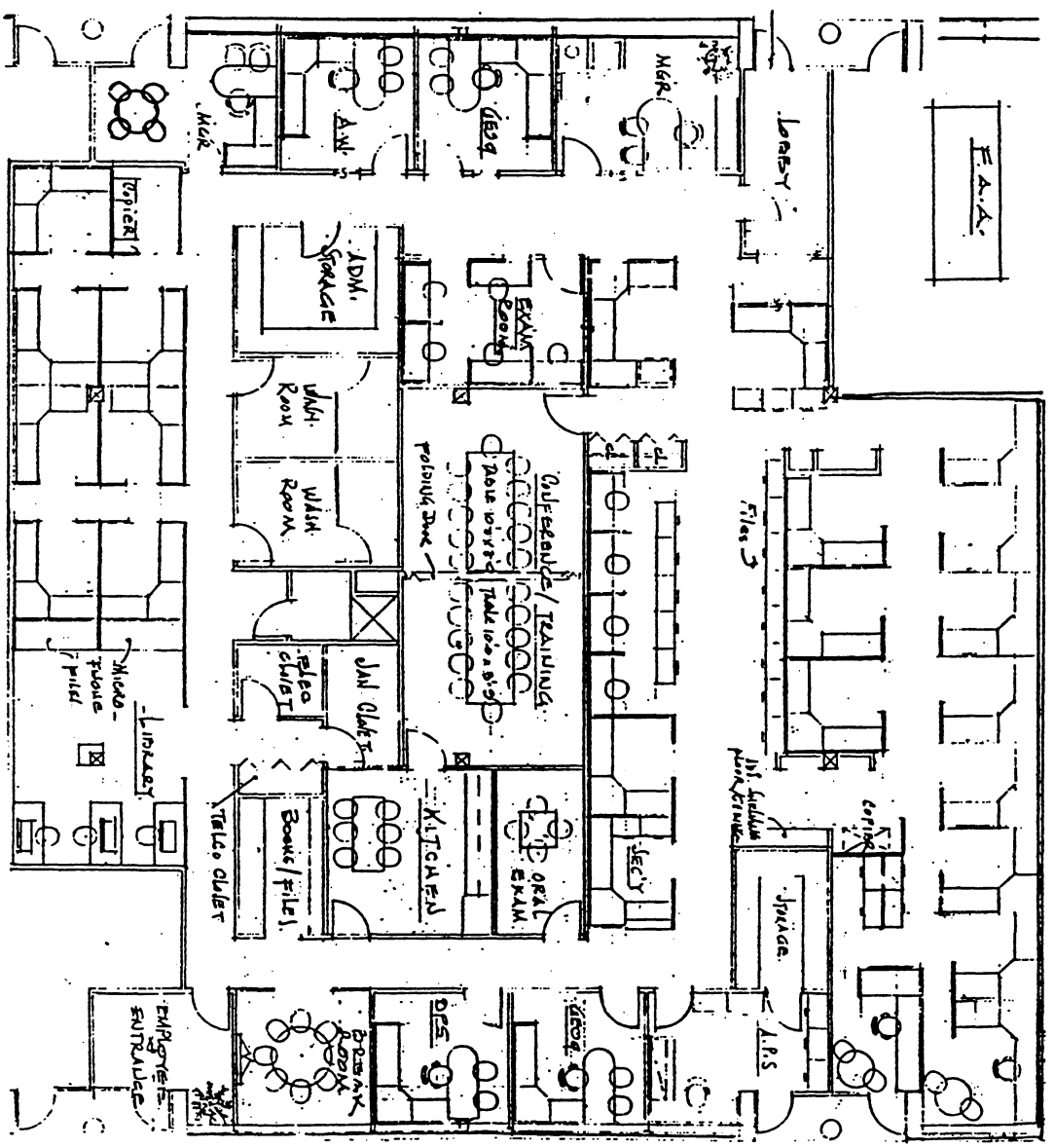

Figure 3. Three Prototypicals - Systems Furniture Manager's Offices

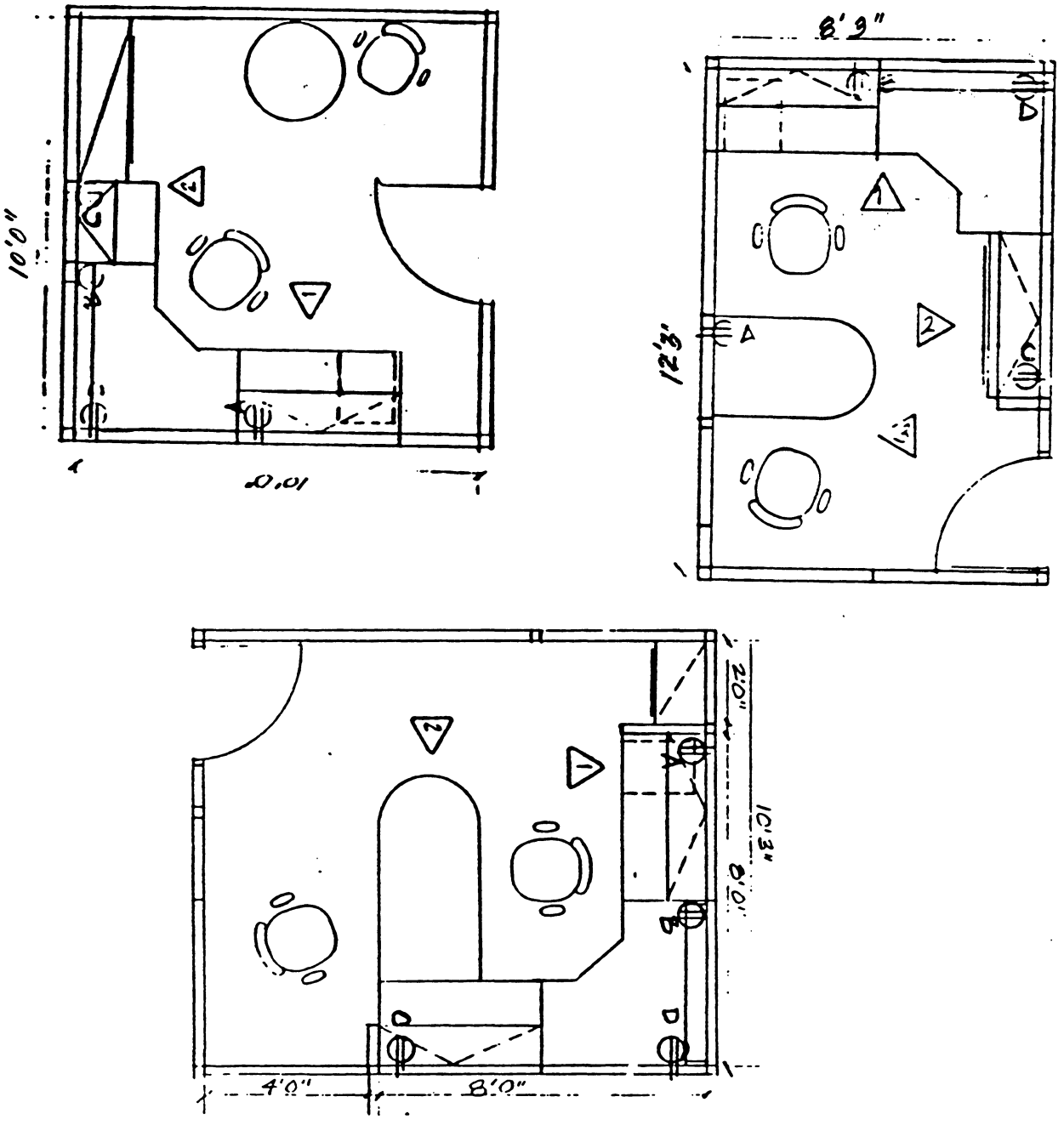

Figure 4. Prototypical - Systems Furnishings for Inside Hard Wall Office Application

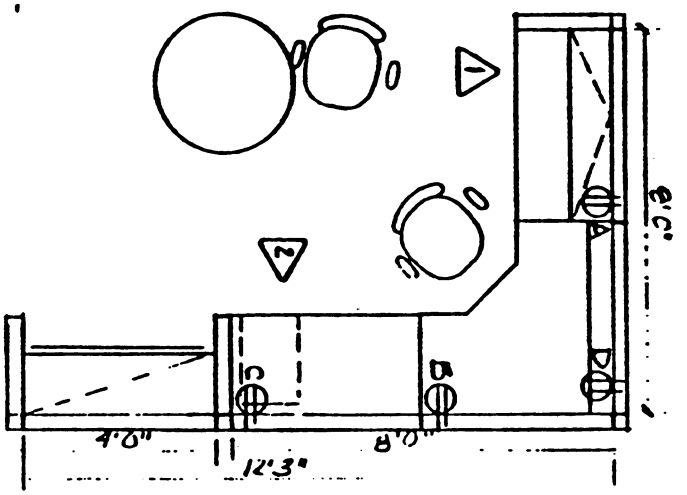

Figure 5. Prototypical - Systems Furniture Specialist Workstation

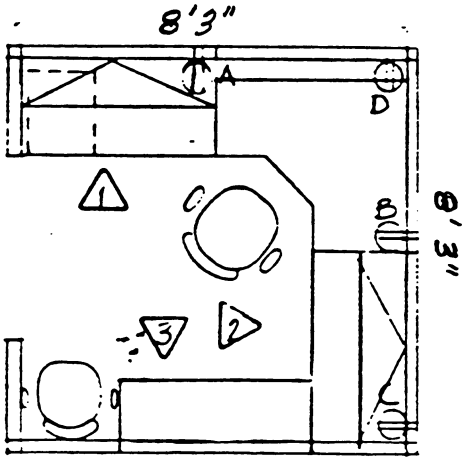

Figure 6. Prototypical - Systems Furniture
Secretarial Station

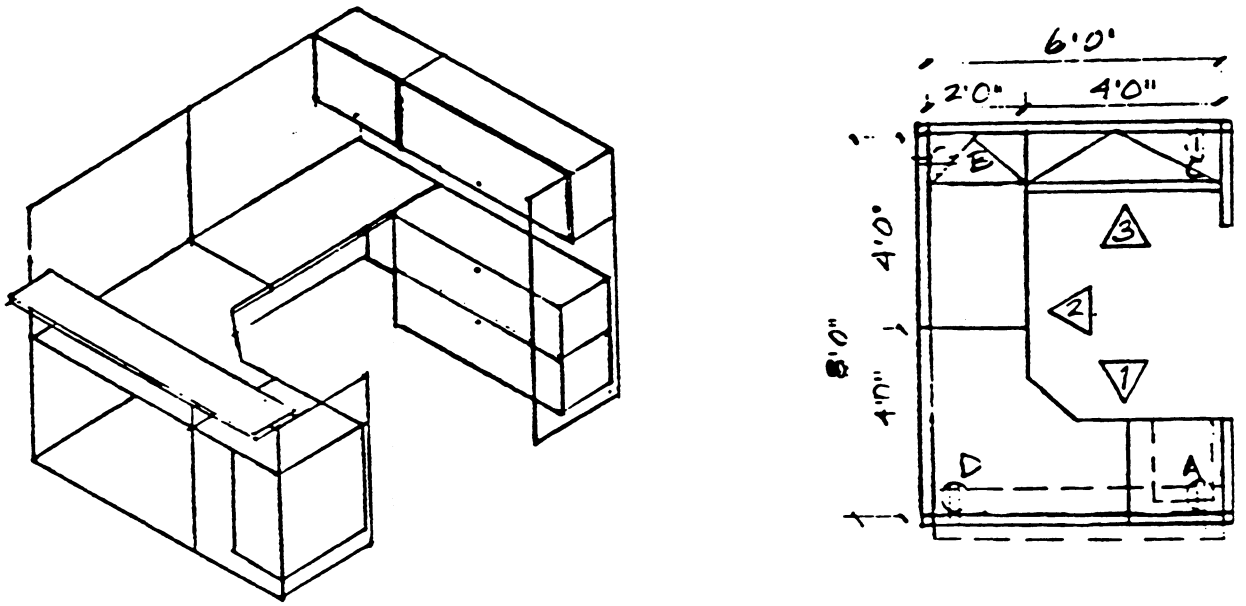

Figure 7. Prototypical - Systems Furniture
Workstation for Administrative/Clerical Application or
Shared Use

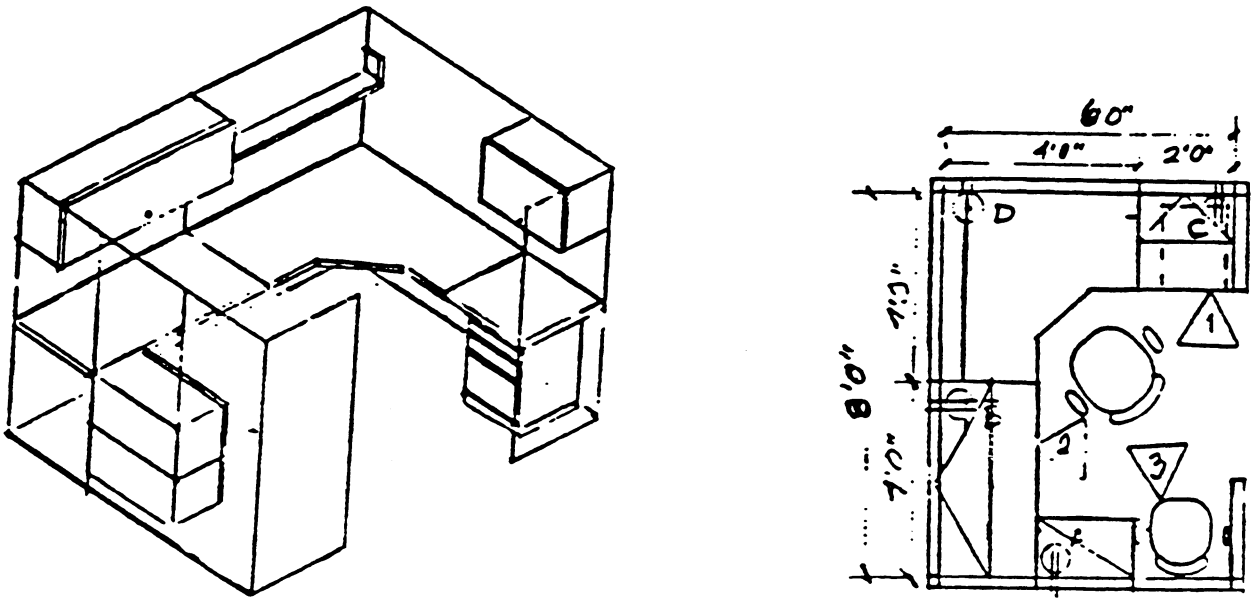

APPENDIX 5.
SUGGESTED GUIDELINES
FOR MAINTAINING THE APPEARANCE OF
THE NEW WORKSPACE

In order to maintain an attractive, clean, and comfortable workspace, the following guidelines have been developed for use throughout the Flight Standards organization. These standards are applicable to systems and conventional furnishings.

1. Thermostats, blinds, and window wells are items of common use. Employees seated immediately in front of these areas should not assume responsibility for them and arbitrarily control their use, thus causing discomfort to others. The window wells must be kept free of clutter and their access must not be restricted. Blinds and draperies should remain drawn; vertical blinds may be opened or closed, depending on light requirements.

2. File cabinets should be closed immediately after use. Tops of cabinets will not be used for storage purposes.

3. Pictures and posters on walls should be in frames. Partitions on walkways should contain no postings. Material posted inside the workstation should be restricted to tackboards or framed and hung on approved devices.

4. Coats, sweaters, jackets, etc., should be hung in designated racks/closets, or within the workstation on hooks supplied with the systems furniture.

5. Trash cans should be stored under the desk, in a place accessible to cleaning crew personnel.

6. Special equipment use areas (e.g., microfiche, libraries, shared word processing areas) should be centrally located, out of public view, and maintained by the employees.

7. Food items should not remain in the workstation. Please promptly remove all utensils and leftover food stuffs in order to deter bugs and rodents.

8. Name plates on the workstations will be uniform throughout the floor.

9. Systems and conventional furnishings should not be mixed within the workstation. To the extent possible, they should not be mixed within the work area.

9. Systems and conventional furnishings should not be mixed within the workstation. To the extent possible, they should not be mixed within the work area.

10. No items will be placed on top of the systems furniture, visible above the panels. Cabinet tops will not be used for storage, plants, etc.

11. Electrical outlets:

WARNING

Within each systems workstation, there are usually three or more electrical outlets. These outlets are identified by numbers or letters. One of the outlets is a dedicated circuit, that may be further identified by a red light or mark.

THE DEDICATED OUTLET IS STRICTLY FOR COMPUTER USE. DO NOT USE THIS OUTLET FOR ANY OTHER ELECTRICAL DEVICE.

THE OTHER PLUGS shall be used for equipment such as calculators, lights, typewriters. **DO NOT PLUG COFFEE POTS, HEATERS, FANS, MICROWAVES, REFRIGERATORS, ETC., INTO ANY OF THE SYSTEMS FURNITURE OUTLETS.** These items surge electrical power and cause failure (and possible permanent damage) of the systems furniture outlets.

U.S. Department
of Transportation

**Federal Aviation
Administration**

Directive Feedback Information

Please submit any written comments or recommendations for improving this directive, or suggest new items or subjects to be added to it. Also, if you find an error, please tell us about it.

Subject: Order _____

To: Directive Management Officer, _____

(Please check all appropriate line items)

☐ An error (procedural or typographical) has been noted in paragraph _____ on page _____.

☐ Recommend paragraph _____ on page _____ be changed as follows:
(attach separate sheet if necessary)

☐ In a future change to this directive, please include coverage on the folowing subject
(briefly describe what you want added):

☐ Other comments:

☐ I would like to discuss the above. Please contact me.

Submitted by: _____ Date: _____

FTS Telephone Number: _____ Routing Symbol: _____

FAA Form 1320—19 (8-89)